EXHIBIT 1

Plans and Specifications
for the
Bear Valley Road Overhead at BNSF Railroad Project

CITY OF VICTORVILLE

CONTRACT DOCUMENTS,
SPECIAL PROVISIONS

For

BEAR VALLEY ROAD OVERHEAD AT BNSF RAILROAD

Project No. BHLS-5380 (026)

Bid Opening date: XXX

Bid Opening Time: 11:00 A.M.

CONTRACT DOCUMENTS,
SPECIAL PROVISIONS
FOR

BEAR VALLEY ROAD OVERHEAD AT BNSF RAILROAD

Project No. BHLS-5380 (026)

Prepared For:

CITY OF VICTORVILLE
Department of Public Works
14343 Civic Drive
Victorville, CA 93292

Contact: Brian Gengler, City Engineer
Tel: (760) 955-5156

Prepared By:

DOKKEN ENGINEERING
www.dokkenengineering.com

December 2018

Approved for Construction:

_____ Date: _____

XXXXXXXX,
Director of Public Works

The various portions of the Contract Documents have been prepared under the direction of the following licensed Civil Engineers, in accordance with California Business and Professions Code §6735.

ROADWAY

Registered Civil Engineer Date

STRUCTURE

Registered Civil Engineer Date

ELECTRICAL

Registered Civil Engineer Date

TABLE OF CONTENTS

BEAR VALLEY ROAD OVERHEAD AT BNSF RAILROAD
PROJECT NO. BHLS-5380 (026)

TITLE	SECTION
NOTICE OF INVITING BIDS	A
INSTRUCTIONS TO BIDDERS	B
PROPOSAL	C
GENERAL SPECIFICATIONS	D
SPECIAL PROVISIONS	E
SPECIAL CONDITIONS	F
SPECIAL PROVISIONS TECHNICAL	G

ATTACHMENTS

APPENDIX "A" Railroad Agreement
APPENDIX "B" Environmental Commitment Record
APPENDIX "C" City of Victorville Section C-21 – Special Provisions for Traffic Signal Controller Units, Cabinets and Auxiliary Equipment
APPENDIX "D" Revised State Standard Specifications

SECTION A: NOTICE TO BIIDERS

BEAR VALLEY ROAD OVERHEAD AT BNSF RAILROAD

PROJECT NO. BHLS-5380 (026)

NOTICE IS HEREBY GIVEN by the City of Victorville, State of California, that sealed bids for work in accordance with the Project Plans (Plans) and Contract Documents designated:

BEAR VALLEY ROAD OVERHEAD AT BNSF RAILROAD

PROJECT NO. BHLS-5380 (026)

will be received by the City Clerk at City Hall, 14343 Civic Drive, Victorville, California, until Tuesday, **October 20, 2015, at 2:00 PM**, at which time bids will be publicly opened and read aloud at the same address.

No bid may be withdrawn after the time established for receiving bids or before the award and execution of the Contract, unless the award is delayed for a period exceeding sixty (60) calendar days. Bids shall be executed in accordance with the instructions given and forms provided in the bound Contract Documents furnished by the City of Victorville, Engineering Division. The Proposal shall be attached to and submitted with the Contract Documents bid package in its entirety, inclusive of addendum receipt acknowledgement forms. All bids must be clearly marked on the envelope:

BEAR VALLEY ROAD OVERHEAD AT BNSF RAILROAD

PROJECT NO. BHLS-5380 (026)

TO BE OPENED AT 2:00 p.m., October 20, 2017

LOCATION/DESCRIPTION OF THE WORK: This project is located in the City of Victorville, San Bernardino County along Bear Valley Road between Industrial Boulevard and Ridgecrest Road. The work to be done is shown on the Plans, and generally consists of, but is not limited to:

Widening Bear Valley Road over the Burlington Northern Santa Fe (BNSF) Railroad crossing from Industrial Boulevard to Ridgecrest Road, the work consists of rehabilitating, retrofitting, and widening the existing bridge to accommodate six (6) 12-foot lanes, a 12-foot median, two (2) 8-foot shoulders, and two (2) 6-foot sidewalks. Additional improvements include widening the roadway approaches, modifications to street lighting and traffic signals, and increasing left-turn vehicle storage at Ridgecrest Road.

Other items or details not mentioned above, that are required by the Plans, Standard Specifications, or these Special Provisions, shall be performed, constructed or installed.

The contract time shall be 280 WORKING DAYS.

OBTAINING OR INSPECTING CONTRACT DOCUMENTS: The Contract Documents and Plans may be examined at the City of Victorville Engineering Division, 14343 Civic Drive, Victorville, CA. Official copies of the Contract Documents for bidding may be downloaded at the following link: www.publicpurchase.com.

QUESTIONS: All bidders' questions and communications relative to the Contract Documents shall be submitted in writing to the City or via email to the contact information provided below. No oral responses to any questions concerning the content of the Plans and Contract Documents will be given. All responses will be in the form of written addenda to the Contract Documents and Plans. Bid inquiries must be

received by 2:00 pm on October 13, 2015. After this time, the City will not consider these questions as bid protests.

City of Victorville
Engineering Division
Attn: Brian Gengler, City Engineer
14343 Civic Drive
Victorville, CA 92392
Email: bgengler@ci.victorville.ca.us

SUBMISSION OF BIDS: All proposals must be submitted not later than the date and time prescribed. The Bidder is wholly responsible to ensure its bid is submitted on the date and at the time and place designated for the opening of bids. Any bid received after the time and date specified shall not be considered. Any bid may be withdrawn prior to the scheduled time for opening bids.

Each bid must conform and be responsive to this notice and shall be made on the official proposal forms furnished with the Contract Documents.

BID SECURITY: Each proposal must be accompanied by a Bid Security in the form of a cashier's check, certified check, or bid bond executed on the prescribed form, in an amount not less than ten percent (10%) of the total bid price payable to the City of West Sacramento.

Bidders are hereby notified that in accordance with the provisions of Public Contract Code section 22300, securities may be substituted for any monies which the City may withhold pursuant to the terms of this Contract to ensure performance.

CONTRACTOR'S LICENSE CLASSIFICATION: In accordance with the Provisions of the California Public Contract Code Section 3300, bidders shall be properly licensed to perform the Work and shall possess a CLASS A license or equivalent combination of Classes required by the categories and type of Work included in the Contract Documents and Plans.

CONTRACTOR REGISTRATION: Effective March 1, 2014, all Bidders must have registered with the California State Department of Industrial Relations pursuant to Labor Code section 1725.5 prior to submitting a bid. Furthermore, effective April 1, 2015, a Contractor must be registered pursuant to Labor Code section 1725.5 before entering into a contract to work on a public project.

DBE PARTICIPATION: The City has established there will be a disadvantaged business enterprise (DBE) contract goal of 4.0 percent.

AWARD OF CONTRACT, REJECTION, AND PROTESTS OF BIDS: Bids will be considered for award by the Victorville City Council. The City of Victorville reserves the right after opening bids to reject any or all bids, to waive any informality (non-responsiveness) in a bid, or to make award to the lowest responsive, responsible Bidder and reject all other bids, as it may best serve the interest of the City. As a condition of award, the successful Bidder will be required to submit bonds and evidence of insurance prior to execution of the Agreement by the City. Failure to meet this requirement shall constitute abandonment of the Bid by the Bidder and forfeiture of the Bid Bond. Award will then be made to the next lowest responsible Bidder.

THIS PROJECT IS SUBJECT TO THE "BUY AMERICA" PROVISIONS OF THE SURFACE TRANSPORTATION ASSISTANCE ACT OF 1982 AS AMENDED BY THE INTERMODAL SURFACE TRASNPORTATION EFFICIENCY ACT OF 1991.

WAGE RATE REQUIREMENTS AND DEPARTMENT OF INDUSTRIAL RELATIONS: In accordance with the provisions of California Labor Code Sections 1770, 1773, 1773.1, 1773.2, 1773.6, and 1773.7, the general prevailing rate of wages in the County which the Work is to be done has been determined by the Director of the California Department of Industrial Relations. These wage rates appear in the California Department of Transportation publication entitled General Prevailing Wage Rates. Interested parties can obtain the current wage information by submitting their requests to the Department of Industrial Relations, Division of Labor Statistics and Research, PO Box 603, San Francisco, CA 94101, Phone (415) 972-8620. The rates at the time of the bid advertisement date of a project will remain in effect for the life of the project in accordance with the California Code of Regulation, as modified and effective January 27, 1997. Each Contractor must comply with the Federal wage requirements of the Davis-Bacon Act. The higher of the two rates (State and Federal) must be paid to each person working on the project.

Copies of the general prevailing rate of wages in the County in which the Work is to be done are also on file at the California Department of Transportation's principal office, and shall be made available upon request, or at the Internet address http://www.dir.ca.gov.

The federal minimum wage rates for the project as predetermined by the United States Secretary of Labor are **not** included in the Proposal and Contract. The contractor is responsible to check current wage rates at http://www.wdol.gov/dba.aspx.

By: _____ Date: _____
Brian Gengler, P.E., City Engineer
City of Victorville

SECTION B: INSTRUCTIONS TO BIDDERS

BEAR VALLEY ROAD OVERHEAD AT BNSF RAILROAD
PROJECT NO. BHLS-5380 (026)

1. PROPOSAL FORMS

Bids shall be submitted in writing and on the PROPOSAL forms (see Section C) provided by the AGENCY. All information requested therein must be clearly and legibly set forth in the manner and form indicated. The AGENCY will not consider any proposal not meeting these requirements.

2. PROPOSAL GUARANTEE

Proposals must be accompanied by a proposal guarantee consisting of a certified check, cashier's check or BIDDER's bid bond payable to the AGENCY or cash deposit in the amount not less than ten (10) percent of the total amount bid. Proposals not accompanied by such a guarantee will be deemed non-responsive and will not be considered. If a BIDDER to whom a contract is awarded fails or refuses to execute the contract documents or furnish the required insurance policies and bonds as set forth in those documents, the proposal guarantee shall be forfeited to the AGENCY. Proposal guarantees of all BIDDERS will be held until the successful BIDDER has properly executed all contract documents. The bonding company must be listed on Treasury Circular 570 and licensed to conduct business in the State of California or licensed by the California State Department of Insurance to issue sureties**.**

3. DELIVERY OF PROPOSAL

Proposals shall be enclosed in a sealed envelope plainly marked on the outside, **"SEALED BID FOR the Bear Valley Road Overhead at BNSF Railroad Project, City of Victorville, California – DO NOT OPEN WITH REGULAR MAIL."** Proposals may be mailed or delivered by messenger; however, it is the BIDDER's responsibility alone to ensure delivery of the proposal to the hands of the AGENCY, prior to the bid opening hour stipulated in the Notice Inviting Bids. Late proposals will be deemed non-responsive and will not be considered.

4. WITHDRAWAL OF PROPOSALS

A proposal may be withdrawn by a written request signed by the BIDDER. Such requests must be delivered to the AGENCY's designated official prior to the bid opening hour stipulated in the Notice Inviting Bids. Proposals may not be withdrawn after said hour without forfeiture of the proposal guarantee. The withdrawal of the proposal will not prejudice the right of the BIDDER to submit a new proposal, providing there is time to do so.

5. IRREGULAR PROPOSALS

Unauthorized conditions, limitations, or provisions attached to a proposal will render it irregular and may cause its rejection. The completed proposal forms shall be without interlineations, alterations, or erasures. Alternative proposals will not be considered unless specifically requested. No oral, telegraphic, or telephonic proposal, modification, or withdrawal will be considered.

6. TAXES

No mention shall be made in the proposal of Sales Tax, Use Tax, or any other tax, as all amounts bid will be deemed and held to include any such taxes which may be applicable.

7. DISQUALIFICATION OF BIDDERS

In the event that any BIDDER acting as a prime CONTRACTOR has an interest in more than one proposal, all such proposals will be rejected, and the BIDDER will be disqualified. This restriction does not apply to subcontractors or suppliers who may submit quotations to more than one BIDDER and, while doing so, may also submit a formal proposal as a prime CONTRACTOR. Proposals will be accepted from BIDDERS who are not licensed in accordance with the provisions of the State Business and Professions Code; however, the successful BIDDER shall be licensed in accordance with provisions of the Business and Professions Code and shall possess a State CONTRACTOR's license, **Class A** at the time a contract for this work is awarded.

It is the intention of the AGENCY to award a contract to a BIDDER who furnished satisfactory evidence that he/she has the requisite experience and ability, and that he/she has sufficient and services, except as may be provided otherwise in the Contract Documents. In the event of a difference between a price quoted in words and a price quoted in figures for the same quotation, the words shall be the amount bid. At the time of the bid opening, BIDDER shall provide documentation with references to substantiate his experience including job location, size, schedule and owner's name, address and telephone number for the above items. Before entering into a Contract, the successful bidder shall furnish a statement of his financial condition as may be required by the AGENCY.

The AGENCY may conduct investigations as it deems necessary to assist in the evaluation of any Bid and to establish the responsibility, qualifications and financial ability of the BIDDER to do the Work in accordance with the Contract Documents to the AGENCY's satisfaction within the prescribed time. To determine the degree of responsibility to be credited to the BIDDER, the AGENCY will weigh any evidence including but not limited to evidence of suspension, debarment, exclusion, or determination of ineligibility by any other AGENCY. Any BIDDER which is currently debarred by any PUBLIC AGENCY is deemed not to be a qualified BIDDER for the purposes of this project.

If in the opinion of the AGENCY, a BIDDER is determined to be insufficiently qualified, then that bid will not be considered for award of the contract.

8. EXAMINATION OF CONTRACT DOCUMENTS

BIDDER shall examine carefully the entire site of the work, including but not restricted to the conditions and encumbrances related thereto, the plans and specifications, and the proposal and contract forms therefore. The submission of a bid shall be conclusive evidence that BIDDER has investigated and is satisfied as to the conditions to be encountered, as to the character, quality, and scope of the work to be performed, the quantities of material to be furnished, and as to the requirements of the proposal, plans, specifications, and other contract documents.

BIDDERS must satisfy themselves by personal examination of the work site, plans, specifications, and other contract documents, and by any other means as they may believe necessary, as to the actual physical conditions, requirements, and difficulties under which the work must be performed. No BIDDER shall at any time after submission of a proposal make any claim or assertion that there was any misunderstanding

or lack of information regarding the nature or amount of work necessary for the satisfactory completion of the job. Errors, omissions, or discrepancies found in the plans, specifications, or other contract documents shall be called to the attention of the AGENCY by fax as instructed and with the date and time given for BIDDERS questions in the most current NOTICE INVITING SEALED BIDS.

9. EMPLOYMENT OF LOCAL LABOR AND BUSINESSES

All BIDDERS are encouraged to utilize local subcontractors and suppliers to the extent they are available, competitive and qualified. However, no bid will be affected either positively or negatively by the inclusion or exclusion of such local businesses.

10. LEGAL RESPONSIBILITIES

Proposals must be submitted, filed, made, and executed in accordance with State and Federal laws relating to bids for contracts of this nature, whether the same are expressly referred to herein or not. BIDDERS submitting a proposal shall, by such action thereby, agree to each and all of the terms, conditions, provisions, and requirements set forth, contemplated, and referred to in the plans, specifications, and other contract documents, and to full compliance therewith.

Additionally, BIDDERS submitting a proposal shall, by such action thereby, agree to pay at least the minimum prevailing per diem wages as provided in Section 1773, et. seq. of the Labor Code for each craft, classification, or type of workman required, as set forth by the Director of Industrial Relations of the State of California.

11. NON-DISCRIMINATION

In the performance of this Contract, CONTRACTOR shall not discriminate in recruiting, hiring, promotion, demotion, or termination practices on the basis of race, religious creed, color, national origin, ancestry, sex, age, or physical handicap and shall comply with the provisions of the California Fair Employment & Housing Act (Government Code Section 12900, *et seq*.), the Federal Civil Rights Act of 1964 (P.L. 88-352) and all amendments thereto, Executive Order No. 11246 (30 Federal Register 12319), and all administrative rules and regulations issued pursuant to said Acts and Order. CONTRACTOR shall likewise require each subcontractor to comply with this paragraph and shall include in each such subcontract language similar to this paragraph.

12. PROTECTION OF RESIDENT WORKERS

The City of Victorville actively supports the Immigration and Nationality Act (INA) which includes provisions addressing employment eligibility, employment verification, and nondiscrimination. Under the INA, employers may hire only persons who may legally work in the United States (i.e., citizens and nationals of the U.S.) and aliens authorized to work in the U.S. The employer must verify the identity and employment eligibility of anyone to be hired, which includes completing the Employment Eligibility Verification Form (I-9). The Contractor shall establish appropriate procedures and controls so no services or products under the Contract Documents will be performed or manufactured by any worker who is not legally eligible to perform such services or employment.

13. AWARD OF CONTRACT

The award of contract, if made, will be to the lowest responsible BIDDER as determined solely by the AGENCY. Additionally, the AGENCY reserves the right to reject any or all proposals, to waive any irregularity, and to take the bids under advisement for a period of 90 days, all as may be required to provide for the best interests of the AGENCY. In no event will an award be made until all necessary investigations are made as to the responsibility and qualifications of the bidder to whom the award is contemplated. All bids will be compared with the Engineer's Estimate.

The acceptance of a proposal will be evidenced by a Notice of Award of Contract in writing, delivered by mail to the BIDDER whose proposal is accepted. No other act of the AGENCY shall constitute acceptance of a proposal. The award of contract shall obligate the BIDDER, whose proposal is accepted to furnish all required bonds, as well as evidences of insurance and execute the contract set forth herein. The successful BIDDER will be required to furnish a Labor and Material Bond in an amount equal to one hundred percent (100%) of the Contract price and a Faithful Performance Bond in an amount equal to one hundred percent (100%) of the contract price. Also, the successful BIDDER will be required to submit worker's compensation insurance, and liability insurance with the contract. Surety bonds shall be signed by a guaranty or surety company listed in the latest issue of the U.S. Treasury Circular 570 and satisfactory to the City of Victorville.

14. ASSIGNMENT OF CONTRACT

The Contract may not be assigned without the written consent of the AGENCY, provided that this shall not preclude the assignment of the Contract as security or the assignment of the whole or any part of the proceeds of the Contract including monies, assessment, partial assessment, reassessment, or any bonds which may be issued and represent any assessment or reassessment due or to be due under the Contract.

15. REGISTRATION OF CONTRACTORS

The successful BIDDER shall possess a State Contractor's license, Class A at the time that a contract for this work is awarded, CONTRACTORS shall be licensed in accordance with the provisions of Chapter 9, Division 3 of the Business and Professions Code.

16. AGENCY CONTRACTOR MEETING

The CONTRACTOR to whom the award is made will be notified to meet with the AGENCY's Representative for the purpose of reviewing of plans and specifications and instructions on procedures.

17. MODIFICATIONS PRIOR TO DATE SET FOR OPENING BIDS

The right is reserved, as the interest of the AGENCY may require, to amend the specifications and/or drawings prior to the date set for opening bids. Such revisions and amendments, if any, will be announced by an addendum, or addenda. Copies of such addenda as may be issued will be furnished to all prospective BIDDERS. If the revisions and amendments are of a nature which require material changes in quantities or price bid, or both, the date set for opening bids may be postponed by such number of days as, in the opinion of the AGENCY, will enable BIDDERS to revise their bids. In such cases, the addendum will include an announcement of the new date for opening bids.

18. LIST OF SUBCONTRACTORS

Each BIDDER must submit with his bid the following:

a) The Full name of each subcontracting firm as required by Government Code, Sec. 4201, typed or legibly printed.
b) The address of each firm.
c) The telephone number at the place of business.
d) Work to be performed by each subcontracting firm.
e) Total approximate dollar amount of each subcontract.

Submit the "Subcontractor's List" form enclosed herewith. No Contract shall be considered unless such list is submitted as required.

The City of Victorville reserves the right to reject any and all bids, or delete portions of any and all bids, or waive any informality in the bid not affected by law.

Before entering into a Contract, the successful BIDDER shall furnish a statement of his financial condition and previous construction experience or such evidence of his qualifications as may be required by the contracting AGENCY.

19. UNFAIR BUSINESS PRACTICES CLAIMS: ASSIGNMENT TO AWARDING BODY

Pursuant to Section 7103 of the Public Contracts Code, the contract to be awarded will be defined as a "public works contract". In entering into a public works contract or a subcontract to supply goods, services, or materials pursuant to a public works contract, the CONTRACTOR or subcontractor offers and agrees to assign to the awarding body all rights, title, and interest in and to all causes of action it may have under Section 4 of the Clayton Act (15 U.S.C. Sec 15) or under the Cartwright Act (Chapter 2 commencing with Section 16700, of Part 2 of Division 7 of the Business and Professions Code), arising from purchases of goods, services, or materials pursuant to the public works contract or the subcontract. This assignment shall be made and become effective at the time the awarding body tenders final payment to the CONTRACTOR, without further acknowledgment by the parties.

20. GENERAL

The contractor, sub recipient or subcontractor shall not discriminate on the basis of race, color, national origin, or sex in the performance of this contract. The contractor shall carry out applicable requirements of Title 49 CFR (Code of Federal Regulations) part 26 in the award and administration of US DOT assisted contracts. Failure by the contractor to carry out these requirements is a material breach of this contract, which may result in the termination of this contract or such other remedy, as the recipient deems appropriate. Each subcontract signed by the bidder must include this assurance.

Failure of the bidder to fulfill the requirements of the Special Provisions for submittals required to be furnished after bid opening, including but not limited to escrowed bid documents, where applicable, may subject the bidder to a determination of the bidder's responsibility in the event it is the apparent low bidder on a future public works contracts.

The form of Bidder's Bond provided in Section C, "Proposal," of the Standard Specifications shall be included with the Proposal.

In conformance with Public Contract Code Section 7106, a Non-collusion Affidavit is included in the Proposal. Signing the Proposal shall also constitute signature of the Non-collusion Affidavit.

21. AWARD AND EXECUTION OF CONTRACT

The bidder's attention is directed to the provisions in Section 2-1, "Award and Execution of Contract," of the Standard Specification of Public Works Construction (SSWPC), 2015 Edition, and these special provisions for the requirements and conditions concerning award and execution of contract.

The award of the contract, if it be awarded, will be to the lowest responsible bidder whose bid complies with all the requirements prescribed.

The contract shall be executed by the successful bidder and shall be returned, together with the contract bonds, to the Agency so that it is received within 10 days, not including Saturdays, Sundays and legal holidays, after the bidder has received the contract for execution. Failure to do so shall be just cause for forfeiture of the proposal guaranty. The executed contract documents shall be delivered to Agency's mailing address.

22. PERFORMANCE OF SUBCONTRACTORS

The subcontractors listed by the Contractor in conformance with Section 2-3.1, "Subcontracts" of the (SSPWC), shall perform the work and supply the materials for which they are listed, unless the Contractor has received prior written authorization to perform the work with other forces or to obtain the materials from other sources.

The Contractor should notify the Engineer in writing of any changes to its anticipated DBE participation. This notice should be provided prior to the commencement of that portion of the work.

The subcontractors listed by you in THE Contract Documents shall list therein the name and address of each subcontractor to whom the bidder proposes to subcontract portions of the work in an amount in excess of one-half of one percent of the total bid or $10,000, whichever is greater, in accordance with the Subletting and Subcontracting Fair Practices Act, commencing with Section 4100 of the Public Contract Code. The bidder's attention is invited to other provisions of the Act related to the imposition of penalties for a failure to observe its provisions by using unauthorized subcontractors or by making unauthorized substitutions.

23. PROMPT PROGRESS PAYMENT TO SUBCONTRACTORS

A prime contractor or subcontractor shall pay any subcontractor not later than 10 days of receipt of each progress payment in accordance with the provision in Section 7108.5 of the California Business and Professions Code concerning prompt payment to subcontractors. The 10 days is applicable unless a longer period is agreed to in writing. Any delay or postponement of payment over 30 days may take place only for good cause and with the agency's prior written approval. Any violation of Section 7108.5

shall subject the violating contractor or subcontractor to the penalties, sanction and other remedies of that section. This requirement shall not be construed to limit or impair any contractual, administrative, or judicial remedies otherwise available to the contractor or subcontractor in the event of a dispute involving late payment or nonpayment by the prime contractor, deficient subcontract performance, or noncompliance by a subcontractor. This provision applies to both DBE and non-DBE subcontractors.

24. PROMPT PAYMENT OF FUNDS WITHHELD TO SUBCONTRACTORS

The agency shall hold retainage from the prime contractor and shall make prompt and regular incremental acceptances of portions, as determined by the agency, of the contract work, and pay retainage to the prime contractor based on these acceptances. The prime contractor, or subcontractor, shall return all monies withheld in retention from a subcontractor within 30 days after receiving payment for work satisfactorily completed and accepted including incremental acceptances of portions of the contract work by the agency. Federal law (49CFR26.29) requires that any delay or postponement of payment over 30 days may take place only for good cause and with the agency's prior written approval. Any violation of this provision shall subject the violating prime contractor or subcontractor to the penalties, sanctions and other remedies specified in Section 7108.5 of the Business and Professions Code. These requirements shall not be construed to limit or impair any contractual, administrative, or judicial remedies otherwise available to the prime contractor or subcontractor in the event of a dispute involving late payment or nonpayment by the prime contractor, deficient subcontract performance, or noncompliance by a subcontractor. This provision applies to both DBE and non-DBE prime contractors and subcontractors.

25. PROTEST PROCEDURES.

Any person or entity may present a formal protest to the City with respect to solicitations being conducted by staff. The protest must be in writing, on business letterhead addressed to the City Manager and delivered to the City Clerk.

Definitions.

Bidder means any person or firm providing a timely, written response to the City solicitation.
Bid response means the written response to the City solicitation provided by a person or firm.

Protest means a statement of protest, dispute, challenge, disagreement, disapproval or other objection regarding documents, determinations or actions taken or contemplated by the City with respect to a solicitation.

Solicitation means the document (Invitation for Bid, Request for Quote or Request for Proposal) by which the City identifies goods, services or public construction projects for which it seeks a bid response.

Timeframes.

Protests of any kind regarding the solicitation including, but not limited to, specifications, scope of work or process, must be received by the City not more than five business days after the last day for questions or the last addendum is issued, which ever is later.

Protests regarding bid responses or award of contract must be received by the City within five business days of when the protester knew or should have known of the facts and circumstances on which the protest is based. For information that is made public, the time will start from the date the information is made public.

Format.

The protest must include the following information at a minimum:

1. The name, address and phone number of the protester, or the authorized representative of the protester;

2. The signature of the protester or authorized representative of the protester;

3. The Invitation for Bid (IFB) or request for Proposal (RFP) number and title under which the protest is submitted;

4. A detailed description of the legal and/or factual grounds for the protest and all supporting documentation. For protests containing elements not based on publicly released information the protest must contain documentation clearly showing the date on which the protester received the information; and

5. The form of relief requested.

Protest Review.

The City will provide a written response to the protester within ten business days.

Mandatory Procedure.

This administrative procedure and the time limits set forth herein are mandatory. Failure to comply with these mandatory procedures shall constitute a waiver of any right to pursue the bid protest, including filing a Government Code claim or any legal proceedings or actions.

SECTION C – PROPOSAL

To: CITY OF VICTORVILLE
COUNTY OF SAN BERNARDINO,
STATE OF CALIFORNIA

for the construction of

BEAR VALLEY ROAD OVERHEAD AT BNSF RAILROAD
PROJECT NO. BHLS-5380 (026)

NAME OF BIDDER _____

BUSINESS P.O. BOX _____

CITY, STATE, ZIP _____

BUSINESS STREET ADDRESS _____
(Please include even if P.O. Box used)

CITY, STATE, ZIP _____

TELEPHONE NO: AREA CODE ( ) _____

FAX NO: AREA CODE ( ) _____

The work for which this Proposal is submitted is for the construction in accordance with these Contract Documents (including the payment of not less than the State general prevailing wage rates or Federal minimum wage rates set forth herein), the Project Plans described below, including any addenda thereto, the Contract annexed hereto, and also in accordance with the California Department of Transportation Standard Plans and Standard Specifications, and the Labor Surcharge and Equipment Rental Rates in effect on the date the work is accomplished, and in accordance with the General Prevailing Wage rates. The Project Plans and Contract Documents for the work to be done are entitled:

BEAR VALLEY ROAD OVERHEAD AT BNSF RAILROAD
PROJECT NO. BHLS-5380 (026)

Bids are to be submitted for the entire work. The amount of the bid for comparison purposes will be the total of all the items.

The Bidder shall set forth for each unit basis item of work a unit price and a total for the item, and for each lump sum item a total for the item, all in clearly legible figures in the respective spaces provided for this purpose. In the case of unit basis items, the amount set forth under the "Item Total" column shall be the product of the unit price bid and the estimated quantity for the item.

In case of discrepancy between the item price and the total set forth for a unit basis item, the unit price shall prevail, except as provided in (a) or (b), as follows:

(a) If the amount set forth as a unit price is unreadable or otherwise unclear, or is omitted, or is the same as the amount as the entry in the item total column, then the amount set forth in the total column for the item shall prevail and shall be divided by the estimated quantity for the item and the price thus obtained shall be the unit price;
(b) If the product of the entered unit price and the estimated quantity is exactly off by a factor of ten, one hundred, etc., or one-tenth, or one-hundredth, etc., from the entered total, the discrepancy will be resolved by using the entered unit price or item total, whichever most closely approximates percentage wise the unit price or item total in the Department's Final Estimate of cost.

If both the unit price and the item total are unreadable or otherwise unclear, or are omitted, the bid may be deemed irregular. Likewise if the item total for a lump sum item is unreadable or otherwise unclear, or is omitted, the bid may be deemed irregular unless the project being bid has only a single item and a clear, readable total bid is provided. Symbols such as commas and dollar signs will be ignored and have no mathematical significance in establishing any unit price or item total or lump sums. Written unit prices, item totals and lump sums will be interpreted according to the number of digits and, if applicable, decimal placement. Cents symbols also have no significance in establishing any unit price or item total since all figures are assumed to be expressed in dollars and/or decimal fractions of a dollar. Bids on lump sum items shall be item totals only; if any unit price for a lump sum item is included in a bid and it differs from the item total, the items total shall prevail.

The foregoing provisions for the resolution of specific irregularities cannot be so comprehensive as to cover every omission, inconsistency, error or other irregularity which may occur in a bid. Any situation not specifically provided for will be determined in the discretion of the CITY OF VICTORVILLE, and that discretion will be exercised in the manner deemed by the CITY OF VICTORVILLE to best protect the public interest in the prompt and economical completion of the work. The decision of the CITY OF VICTORVILLE respecting the amount of a bid, or the existence or treatment of an irregularity in a bid, shall be final. If this proposal shall be accepted and the undersigned shall fail to enter into the contract and furnish the 2 bonds in the sums required by the State Contract Act, with surety satisfactory to the CITY OF VICTORVILLE, within 8 days, not including Saturdays, Sundays and legal holidays, after the bidder has received notice from the CITY OF VICTORVILLE that the contract has been awarded, the CITY OF VICTORVILLE may, at its option, determine that the bidder has abandoned the contract, and thereupon this proposal and the acceptance thereof shall be null and void and the forfeiture of the security

accompanying this proposal shall operate and the same shall be the property of the CITY OF VICTORVILLE.

The undersigned, as bidder, declares that the only persons or parties interested in this proposal as principals are those named herein; that this proposal is made without collusion with any other person, firm, or corporation; that he has carefully examined the location of the proposed work, the annexed proposed form of contract, and the plans therein referred to; and he proposes, and agrees if this proposal is accepted, that he will contract with the CITY OF VICTORVILLE, in the form of the copy of the contract annexed hereto, to provide all necessary machinery, tools, apparatus and other means of construction, and to do all the work and furnish all the materials specified in the contract, in the manner and time therein prescribed, and according to the requirements of the Engineer as therein set forth, and that he will take in full payment therefore the following prices, to wit:

BID SCHEDULE

ITEM NO.	ITEM CODE	ITEM DESCRIPTION	UNIT	QTY.	UNIT COST	TOTAL COST
1	070030	LEAD COMPLIANCE PLAN	LS	1		
2	080050	PROGRESS SCHEDULE (CRITICAL PATH METHOD)	LS	1		
3	100100	DEVELOP WATER SUPPLY	LS	1		
4	120090	CONSTRUCTION AREA SIGNS	LS	1		
5	120100	TRAFFIC CONTROL SYSTEM	LS	1		
6	120149	TEMPORARY PAVEMENT MARKING (PAINT)	SQFT	170		
7	120159	TEMPORARY TRAFFIC STRIPE (PAINT)	LF	22,600		
8	120182	PORTABLE DELINEATOR	EA	57		
9	129000	TEMPORARY RAILING (TYPE K)	LF	4,540		
10	129111	TEMPORARY CRASH CUSHION (TYPE ABSORB 350)	EA	6		
11	130100	JOB SITE MANAGEMENT	LS	1		
12	130300	PREPARE STORM WATER POLLUTION PREVENTION PLAN	LS	1		
13	130330	STORM WATER ANNUAL REPORT	EA	3		
14	170103	CLEARING AND GRUBBING	LS	1		
15	190101	ROADWAY EXCAVATION	CY	9,500		
16	192003(F)	STRUCTURE EXCAVATION (BRIDGE)	CY	1,602		
17	192037(F)	STRUCTURE EXCAVATION (RETAINING WALL)	CY	125		
18	193003(F)	STRUCTURE BACKFILL (BRIDGE)	CY	977		
19	193013(F)	STRUCTURE BACKFILL (RETAINING WALL)	CY	33		
20	198010	IMPORTED BORROW	CY	32,500		
21	210350	FIBER ROLLS	LF	20,300		
22	210430	HYDROSEED	SQFT	155,100		
23	211111	PERMANENT EROSION CONTROL ESTABLISHMENT WORK	LS	1		
24	260203	CLASS 2 AGGREGATE BASE	CY	2,600		
25	390133	ASPHALT CONCRETE (TYPE C)	TON	8,600		
26	393005	GEOSYNTHETIC PAVEMENT INTERLAYER (PAVING	SQYD	20,100		

ITEM NO.	ITEM CODE	ITEM DESCRIPTION	UNIT	QTY.	UNIT COST	TOTAL COST
		MAT)				
27	398200	COLD PLANE ASPHALT CONCRETE PAVEMENT	SQYD	21,000		
28	398300	REMOVE BASE AND SURFACING	SQYD	1,000		
29	510051(F)	STRUCTURAL CONCRETE, BRIDGE FOOTING	CY	302		
30	510053(F)	STRUCTURAL CONCRETE, BRIDGE	CY	723		
31	510054(F)	STRUCTURAL CONCRETE, BRIDGE (POLYMER FIBER)	CY	95		
32	510060(F)	STRUCTURAL CONCRETE, RETAINING WALL	CY	93		
33	510086(F)	STRUCTURAL CONCRETE, APPROACH SLAB (TYPE N)	CY	77		
34	510087(F)	STRUCTURAL CONCRETE, APPROACH SLAB (TYPE R)	CY	179		
35	510090(F)	STRUCTURAL CONCRETE, BOX CULVERT	CY	119		
36	511035(F)	ARCHITECTURAL TREATMENT	SQFT	570		
37	511102	DRILL AND GROUT DOWEL	LF	984		
38	511106	DRILL AND BOND DOWEL	LF	38		
39	511118	CLEAN EXPANSION JOINT	LF	160		
40	512302(P)	FURNISH PRECAST CONCRETE DECK UNIT (SLAB TYPE) (30'-40')	EA	20		
41	512304(P)	FURNISH PRECAST CONCRETE DECK UNIT (SLAB TYPE) (50'-60')	EA	10		
42	512510	ERECT PRECAST PRESTRESSED CONCRETE DECK UNIT	EA	30		
43	519088(P)	JOINT SEAL (MR 1")	LF	230		
44	520102(P-F)	BAR REINFORCING STEEL (BRIDGE)	LB	176,845		
45	520103(P-F)	BAR REINFORCING STEEL (RETAINING WALL)	LB	6,700		
46	520107(P-F)	BAR REINFORCING STEEL (BOX CULVERT)	LB	25,000		
47	568041	RELOCATE PEDESTRIAN BARRICADE	EA	1		
48	600001	PUBLIC SAFETY PLAN	LS	1		
49	600037	PREPARE CONCRETE BRIDGE DECK SURFACE	SQFT	10,186		
50	600045(F)	TREAT BRIDGE DECK	SQFT	10,186		
51	600047	FURNISH BRIDGE DECK TREATMENT MATERIAL	GAL	118		
52	600114	BRIDGE REMOVAL (PORTION)	LS	1		

ITEM NO.	ITEM CODE	ITEM DESCRIPTION	UNIT	QTY.	UNIT COST	TOTAL COST
53	665037(P)	36" CORRUGATED STEEL PIPE (.109" THICK)	LF	43		
54	705023	36" STEEL FLARED END SECTION	EA	3		
55	710152	REMOVE HEADWALL	EA	2		
56	721017(F)	ROCK SLOPE PROTECTION (FACING, METHOD B)	CY	10		
57	721810	SLOPE PAVING (CONCRETE)	CY	159		
58	729011(P)	ROCK SLOPE PROTECTION FABRIC (CLASS 8)	SQYD	40		
59	730030	MINOR CONCRETE (STANDARD CURB)	CY	2		
60	730035	MINOR CONCRETE (CROSS GUTTER)	CY	60		
61	730040	MINOR CONCRETE (GUTTER)	LF	191		
62	730070	DETECTABLE WARNING SURFACE	EA	6		
63	731503	MINOR CONCRETE (MISCELLANEOUS CONSTRUCTION)(HANDRAILING CURB)	CY	6		
64	731504	MINOR CONCRETE (CURB AND GUTTER)	CY	240		
65	731516	MINOR CONCRETE (DRIVEWAY)	CY	100		
66	731521	MINOR CONCRETE (SIDEWALK)	CY	325		
67	731623	MINOR CONCRETE (CURB RAMP)	CY	40		
68	731710	REMOVE CONCRETE CURB	LF	430		
69	731745	REMOVE CONCRETE CROSS GUTTER	SQFT	1,100		
70	731780	REMOVE CONCRETE SIDEWALK	SQYD	125		
71	731830	REMOVE CONCRETE DRIVEWAY	SQFT	2,400		
72	731840	REMOVE CONCRETE (CURB AND GUTTER)	LF	2,300		
73	731860	REMOVE CONCRETE (CURB, GUTTER AND SIDEWALK)	LF	2,100		
74	770030(P)	SIGNAL AND LIGHTING (CITY STREET LOCATION 1)	LS	1		
75	770050(P)	SIGNAL AND LIGHTING (CITY STREET LOCATION 2)	LS	1		
76	783000	RECONSTRUCT MONUMENT SIGN	EA	2		
77	800100	TEMPORARY FENCE	LF	1,760		
78	803170	RELOCATE FENCE	LF	360		
79	810230(P)	PAVEMENT MARKER (RETROREFLECTIVE)	EA	420		

ITEM NO.	ITEM CODE	ITEM DESCRIPTION	UNIT	QTY.	UNIT COST	TOTAL COST
80	810235(P)	PAVEMENT MARKER (NON-REFLECTIVE)	EA	2		
81	820250	REMOVE ROADSIDE SIGN	EA	8		
82	820610	RELOCATE ROADSIDE SIGN	EA	14		
83	820840	ROADSIDE SIGN - ONE POST	EA	6		
84	833020(P-F)	CHAIN LINK RAILING	LF	326		
85	839514(P-F)	HANDRAILING	LF	165		
86	839543(P)	TRANSITION RAILING (TYPE WB-31)	EA	2		
87	839585	ALTERNATIVE FLARED TERMINAL SYSTEM	EA	2		
88	839719(F)	CONCRETE BARRIER (TYPE 732SW MODIFIED)	LF	326		
89	839752	REMOVE GUARDRAIL	LF	100		
90	839788	REMOVE HANDRAILING	LF	175		
91	840501	THERMOPLASTIC TRAFFIC STRIPE	LF	20,200		
92	840515	THERMOPLASTIC PAVEMENT MARKING	SQFT	750		
93	846021	REMOVE TRAFFIC STRIPE	LF	21,700		
94	846026	REMOVE PAVEMENT MARKING	SQFT	370		
95	870200	LIGHTING SYSTEM	LS	1		
96	999990	MOBILIZATION	LS	1		
				TOTAL BASE BID IN FIGURES:	**$**	

TOTAL AMOUNT OF BASE BID IN WORDS:

_____

_____

Notes:

1. Items designated with a (P) are eligible for compensation prior to incorporation into the work, as described in Section 9-3.3 of the Standard Specifications.

SUBCONTRACTORS LISTING

The Bidder shall list the name and address, Contractor license number, and description of portion of work subcontracted of each subcontractor to whom the Bidder proposes to subcontract portions of the work, as required by the provisions of the Standard Specifications and of the special provisions.

NAME	LOCATION OF BUSINESS	LICENSE NO.	PORTION OR TYPE OF WORK

EQUAL EMPLOYMENT OPPORTUNITY CERTIFICATION

This bidder _____, proposed subcontractor _____, hereby certifies that he has _____, has not _____, participated in a previous contract or subcontract subject to the equal opportunity clause, as required by Executive Orders 10925.11114, or 11246, and that he has _____, has not _____, filed with the Joint Reporting Committee, and Director of Office of Federal Contract Compliance, a Federal Government contracting or administering AGENCY, or the former President's Committee on Equal Employment Opportunity, all reports that are under the applicable filing requirements.

Company: _____

By: _____

Title: _____

Date: _____

NOTE: The above certification is required by the Equal Employment Opportunity of the Secretary of Labor (41 CFR 60-1.7(b)(1)), and must be submitted by bidders and proposed subcontractors only in connection with contracts and subcontracts which are subject to the equal opportunity clause as set forth in 41 CFR 60-1.5, (Generally only contracts or subcontracts of $10,000 or under are exempt.)

Currently, the Standard Form 100 (EEO-1) is the only report required by the Executive Orders or their implementing regulations.

Proposed prime CONTRACTORS and subcontractors who have participated in a previous contract or subcontract subject to the Executive Orders and have not filed the required reports should note that 41 CFR 60-1.7(b)(1) prevents the award of contracts and subcontracts unless such CONTRACTOR submits a report covering the delinquent period or such other period specified by the Federal Highway Administration or by the Director, Office of Federal Contract Compliance, U.S. Department of Labor.

PUBLIC CONTRACT CODE SECTION 10285.1 STATEMENT

In conformance with Public Contract Code Section 10285.1 (Chapter 376, Stats. 1985), the bidder hereby declares under penalty of perjury under the laws of the State of California that the bidder has ____ , has not ____been convicted within the preceding three years of any offenses referred to in that section, including any charge of fraud, bribery, collusion, conspiracy, or any other act in violation of any state or Federal antitrust law in connection with the bidding upon, award of, or performance of, any public works contract, as defined in Public Contract Code Section 1101, with any public entity, as defined in Public Contract Code Section 1100, including the Regents of the University of California or the Trustees of the California State University. The term "bidder" is understood to include any partner, member, officer, director, responsible managing officer, or responsible managing employee thereof, as referred to in Section 10285.1.

NOTE: The bidder must place a check mark after "has" or "has not" in one of the blank spaces provided. The above Statement is part of the Proposal. Signing this Proposal on the signature portion thereof shall also constitute signature of this Statement. Bidders are cautioned that making a false certification may subject the certifier to criminal prosecution.

PUBLIC CONTRACT CODE SECTION 10162 QUESTIONNAIRE

In conformance with Public Contract Code Section 10162, the Bidder shall complete, under penalty of perjury, the following questionnaire:

Has the bidder, any officer of the bidder, or any employee of the bidder who has a proprietary interest in the bidder, ever been disqualified, removed, or otherwise prevented from bidding on, or completing a federal, state, or local government project because of a violation of law or a safety regulation?

Yes _____ No _____

If the answer is yes, explain the circumstances in the following space.

PUBLIC CONTRACT CODE SECTION 10232 STATEMENT

In conformance with Public Contract Code Section 10232, the Contractor, hereby states under penalty of perjury, that no more than one final unappealable finding of contempt of court by a federal court has been issued against the Contractor within the immediately preceding two year period because of the Contractor's failure to comply with an order of a federal court which orders the Contractor to comply with an order of the National Labor Relations Board.

NOTE: The above Statement and Questionnaire are part of the Proposal. Signing this Proposal on the signature portion thereof shall also constitute signature of this Statement and Questionnaire. Bidders are cautioned that making a false certification may subject the certifier to criminal prosecution.

NON-COLLUSION AFFIDAVIT
(Title 23 United States Code Section 112 and Public Contract Code Section 7106)

In conformance with Title 23 United States Code Section 112 and Public Contract Code 7106, the Bidder declares that the bid is not made in the interest of, or on behalf of, any undisclosed person, partnership, company, association, organization, or corporation; that the bid is genuine and not collusive or sham; that the Bidder has not directly or indirectly induced or solicited any other bidder to put in a false or sham bid, and has not directly or indirectly colluded, conspired, connived, or agreed with any bidder or anyone else to put in a sham bid, or that anyone shall refrain from bidding; that the Bidder has not in any manner, directly or indirectly, sought by agreement, communication, or conference with anyone to fix the bid price of the Bidder or any other bidder, or to fix any overhead, profit, or cost element of the bid price, or of that of any other bidder, or to secure any advantage against the public body awarding the contract of anyone interested in the proposed contract; that all statements contained in the bid are true; and, further, that the Bidder has not, directly or indirectly, submitted his or her bid price or any breakdown thereof, or the contents thereof, or divulged information or data relative thereto, or paid, and will not pay, any fee to any corporation, partnership, company association, organization, bid depository, or to any member or agent thereof to effectuate a collusive or sham bid.

NOTE: The bidder's execution on the signature portion of the "Bidder's Certification" shall also constitute an endorsement and execution of those certifications which form a part of the proposal. Bidders are cautioned that making a false certification may subject the certifier to criminal prosecution.

BUSINESS AND PROFESSIONS CODE SECTION 7028.15 STATEMENT

In accordance with the Business and Professions Code Section 7028.15, the Contractor hereby states under penalty of perjury that he / she is licensed in accordance with an act providing for the State of California registration of Contractors,

Lic. No. _____, Classification(s) _____ _____/_____/_____
Expiration Date

By my signature on this proposal I certify, under penalty of perjury under the laws of the State of California, that the foregoing questionnaire and statements of Public Contract Code Section 10162, 10232 and 10285.1 are true and correct and that the bidder has complied with the requirements of Section 8103 of the Fair Employment and Housing Commission Regulation (Chapter 5, Title 2 of the California Administrative Code.) By my signature on this proposal I further certify, under penalty of perjury under the laws of the State of California and the United States of America that the Noncollusion Affidavit required by Title 23 United States Code Section 112 and Public Contract Code Section 7106 are true and correct.

Date: _____

_____
Signature and Title of Bidder
Name of Firm

DEBARMENT AND SUSPENSION CERTIFICATION
(TITLE 49, CODE OF FEDERAL REGULATIONS, PART 29)

The bidder under penalty of perjury, certified that except as noted below, he/she or any person associated therewith in the capacity of owner, partner, director, office manager:

- is not currently under suspension, debarment, voluntary exclusion or determination of ineligibility by any federal AGENCY;
- has not been suspended, debarred, voluntarily excluded, or determined ineligible by any federal AGENCY within past three years;
- does not have a proposed debarment pending; and
- has not been indicted, convicted, or had a civil judgment rendered against it by a court of competent jurisdiction in any matter involving fraud or official misconduct within the past 3 years.

If there are any exceptions to this certification, insert the exceptions in the following space.

_____

_____

_____

_____

Exceptions will not necessarily result in denial of award, but will be considered in determining bidders' responsibility. For any exception noted above, indicate below to whom it applies, initialing AGENCY, and dates of action.

_____

_____

_____

_____

NOTE: Providing false information may result in criminal prosecution or administrative sanctions. The above certification is part of the Proposal. Signing this Proposal on the signature portion thereof shall also constitute signature of this Certification.

NONLOBBYING CERTIFICATION
FOR FEDERAL-AID CONTRACTS

The prospective participant certifies, by signing and submitting this bid or proposal, to the best of his or her knowledge and belief, that:

(l) No Federal appropriated funds have been paid or will be paid, by or on behalf of the undersigned, to any person for influencing or attempting to influence an officer or employee of any Federal agency, a Member of Congress, an officer or employee of Congress, or an employee of a Member of Congress in connection with the awarding of any Federal contract, the making of any Federal grant, the making of any Federal loan, the entering into of any cooperative agreement, and the extension, continuation, renewal, amendment, or modification of any Federal contract, grant, loan, or cooperative agreement.

(2) If any funds other than Federal appropriated funds have been paid or will be paid to any person for influencing or attempting to influence an officer or employee of any Federal agency, a Member of Congress, an officer or employee of Congress, or an employee of a Member of Congress in connection with this Federal contract, grant, loan, or cooperative agreement, the undersigned shall complete and submit Standard Form-LLL, "Disclosure of Lobbying Activities," in conformance with its instructions.

This certification is a material representation of fact upon which reliance was placed when this transaction was made or entered into. Submission of this certification is a prerequisite for making or entering into this transaction imposed by Section 1352, Title 31, U.S. Code. Any person who fails to file the required certification shall be subject to a civil penalty of not less than $10,000 and not more than $100,000 for each such failure.

The prospective participant also agrees by submitting his or her bid or proposal that he or she shall require that the language of this certification be included in all lower tier subcontracts, which exceed $100,000 and that all such subrecipients shall certify and disclose accordingly.

DISCLOSURE OF LOBBYING ACTIVITIES

COMPLETE THIS FORM TO DISCLOSE LOBBYING ACTIVITIES PURSUANT TO 31 U.S.C. 1352

1. Type of Federal Action:

☐ a. contract
b. grant
c. cooperative agreement
d. loan
e. loan guarantee
f. loan insurance

2. Status of Federal Action:

☐ a. bid/offer/application
b. initial award
c. post-award

3. Report Type:

☐ a. initial
b. material change

For Material Change Only:
year_____ quarter _____
date of last report_____

4. Name and Address of Reporting Entity

☐ Prime ☐ Subawardee
Tier _____, if known

Congressional District, if known

5. If Reporting Entity in No. 4 is Subawardee, Enter Name and Address of Prime:

Congressional District, if known

6. Federal Department/Agency:

7. Federal Program Name/Description:

CFDA Number, if applicable_____

8. Federal Action Number, if known:

9. Award Amount, if known:

10. Name and Address of Lobby Entity
(If individual, last name, first name, MI)

11. Individuals Performing Services (including address if different from No. 10a)
(last name, first name, MI)

(attach Continuation Sheet(s) if necessary)

12. Amount of Payment (check all that apply)

$_____ ☐ actual ☐ planned

13. Form of Payment (check all that apply):

☐ a. cash
☐ b. in-kind; specify: nature _____
Value_____

14. Type of Payment (check all that apply)

☐ a. retainer
☐ b. one-time fee
☐ c. commission
☐ d. contingent fee
☐ e deferred
☐ f. other, specify _____

15. Brief Description of Services Performed or to be performed and Date(s) of Service, including officer(s), employee(s), or member(s) contacted, for Payment Indicated in Item 11:

(attach Continuation Sheet(s) if necessary)

16. Continuation Sheet(s) attached: **Yes** ☐ **No** ☐

17. Information requested through this form is authorized by Title 31 U.S.C. Section 1352. This disclosure of lobbying reliance was placed by the tier above when his transaction was made or entered into. This disclosure is required pursuant to 31 U.S.C. 1352. This information will be reported to Congress semiannually and will be available for public inspection. Any person who fails to file the required disclosure shall be subject to a civil penalty of not less than $10,000 and not more than $100,000 for each such failure.

Signature: _____

Print Name: _____

Title:_____

Telephone No.: _____ Date: _____

Federal Use Only:

Authorized for Local Reproduction
Standard Form - LLL

Standard Form LLL Rev. 04-28-06

INSTRUCTIONS FOR COMPLETING DISCLOSURE OF LOBBYING ACTIVITIES

This disclosure form shall be completed by the reporting entity, whether subawardee or prime federal recipient at the initiation or receipt of covered federal action or a material change to previous filing pursuant to title 31 U.S.C. Section 1352. The filing of a form is required for such payment or agreement to make payment to lobbying entity for influencing or attempting to influence an officer or employee of any agency, a Member of Congress an officer or employee of Congress or an employee of a Member of Congress in connection with a covered federal action. Attach a continuation sheet for additional information if the space on the form is inadequate. Complete all items that apply for both the initial filing and material change report. Refer to the implementing guidance published by the Office of Management and Budget for additional information.

1. Identify the type of covered federal action for which lobbying activity is or has been secured to influence, the outcome of a covered federal action.
2. Identify the status of the covered federal action.
3. Identify the appropriate classification of this report. If this is a follow-up report caused by a material change to the information previously reported, enter the year and quarter in which the change occurred. Enter the date of the last, previously submitted report by this reporting entity for this covered federal action.
4. Enter the full name, address, city, state, and zip code of the reporting entity. Include Congressional District if known. Check the appropriate classification of the reporting entity that designates if it is or expects to be a prime or subaward recipient. Identify the tier of the subawardee, e.g., the first subawardee of the prime is the first tier. Subawards include but are not limited to: subcontracts, subgrants, and contract awards under grants.
5. If the organization filing the report in Item 4 checks "Subawardee" then enter the full name, address, city, state, and zip code of the prime federal recipient. Include Congressional District, if known.
6. Enter the name of the federal agency making the award or loan commitment. Include at least one organization level below agency name, if known. For example, Department of Transportation, United States Coast Guard.
7. Enter the federal program name or description for the covered federal action (item 1). If known, enter the full Catalog of Federal Domestic Assistance (CFDA) number for grants, cooperative agreements, loans and loan commitments.
8. Enter the most appropriate federal identifying number available for the federal action identification in item 1 (e.g., Request for Proposal (RFP) number, Invitation for Bid (IFB) number, grant announcement number, the contract grant. or loan award number, the application/proposal control number assigned by the federal agency). Include prefixes, e.g., "RFP-DE-90-001."
9. For a covered federal action where there has been an award or loan commitment by the Federal agency, enter the federal amount of the award/loan commitments for the prime entity identified in item 4 or 5.
10. (a) Enter the full name, address, city, state, and zip code of the lobbying entity engaged by the reporting entity identified in Item 4 to influence the covered federal action.
    (b) Enter the full names of the individual(s) performing services and include full address if different from 10 (a). Enter Last Name, First Name and Middle Initial (MI).
11. Enter the amount of compensation paid or reasonably expected to be paid by the reporting entity (Item 4) to the lobbying entity (Item 10). Indicate whether the payment has been made

(actual) or will be made (planned). Check all boxes that apply. If this is a material change report, enter the cumulative amount of payment made or planned to be made.

12. Check all boxes that apply. If payment is made through an in-kind contribution, specify the nature and value of the in-kind payment.
13. Check all boxes that apply. If other, specify nature.
14. Provide a specific and detailed description of the services that the lobbyist has performed or will be expected to perform and the date(s) of any services rendered. Include all preparatory and related activity not just time spent in actual contact with federal officials. Identify the federal officer(s) or employee(s) contacted or the officer(s) employee(s) or Member(s) of Congress that were contacted.
15. Check whether or not a continuation sheet(s) is attached.
16. The certifying official shall sign and date the form, and print his/her name title and telephone number.

Public reporting burden for this collection of information is estimated to average 30-minutes per response, including time for reviewing instruction, searching existing data sources, gathering and maintaining the data needed, and completing and reviewing the collection of information. Send comments regarding the burden estimate or any other aspect of this collection of information, including suggestions for reducing this burden, to the Office of Management and Budget, Paperwork Reduction Project (0348-0046), Washington, D.C. 20503.
SF-LLL-Instructions Rev. 06-04

EXHIBIT 12-B BIDDER'S LIST OF SUBCONTRACTORS (DBE AND NON-DBE)

PART I

The bidder shall list all subcontractors (both DBE and non-DBE) in accordance with Section 2-1.054 of the Standard Specifications and per Title 49, Section 26.11 of the Code of Federal Regulations. This listing is required in addition to listing DBE Subcontractors elsewhere in the proposal. **Photocopy this form for additional firms.**

Firm Name/ Address/ City, State, ZIP	Phone/ Fax	Annual Gross Receipts	Description of Portion of Work to be Performed	Local Agency Use Only (Certified DBE?)
Name	*Phone*	☐ < $1 million		☐YES
		☐ < $5 million		☐NO
Address		☐ < $10 million		*If YES list DBE #:*
	Fax	☐ < $15 million		
City State ZIP		☐ > $15 million		Age of Firm (Yrs.)
Name	*Phone*	☐ < $1 million		☐YES
		☐ < $5 million		☐NO
Address		☐ < $10 million		*If YES list DBE #:*
	Fax	☐ < $15 million		
City State ZIP		☐ > $15 million		Age of Firm (Yrs.)
Name	*Phone*	☐ < $1 million		☐YES
		☐ < $5 million		☐NO
Address		☐ < $10 million		*If YES list DBE #:*
	Fax	☐ < $15 million		
City State ZIP		☐ > $15 million		Age of Firm (Yrs.)
Name	*Phone*	☐ < $1 million		☐YES
		☐ < $5 million		☐NO
Address		☐ < $10 million		*If YES list DBE #:*
	Fax	☐ < $15 million		
City State ZIP		☐ > $15 million		Age of Firm (Yrs.)

Distribution: 1) Original - Local Agency File

EXHIBIT 12-B BIDDER'S LIST OF SUBCONTRACTORS (DBE AND NON-DBE)

PART II

The bidder shall list all subcontractors (both DBE and non-DBE) in accordance with Section 2-1.054 of the Standard Specifications and per Title 49, Section 26.11 of the Code of Federal Regulations. This listing is required in addition to listing DBE Subcontractors elsewhere in the proposal. **Photocopy this form for additional firms.**

Firm Name/ Address/ City, State, ZIP	Phone/ Fax	Annual Gross Receipts	Description of Portion of Work to be Performed	Local Agency Use Only (Certified DBE?)
Name	*Phone*	☐ < $1 million		☐YES
		☐ < $5 million		☐NO
Address		☐ < $10 million		*If YES list DBE #:*
	Fax	☐ < $15 million		
City State ZIP		☐ > $15 million		Age of Firm (Yrs.)
Name	*Phone*	☐ < $1 million		☐YES
		☐ < $5 million		☐NO
Address		☐ < $10 million		*If YES list DBE #:*
	Fax	☐ < $15 million		
City State ZIP		☐ > $15 million		Age of Firm (Yrs.)
Name	*Phone*	☐ < $1 million		☐YES
		☐ < $5 million		☐NO
Address		☐ < $10 million		*If YES list DBE #:*
	Fax	☐ < $15 million		
City State ZIP		☐ > $15 million		Age of Firm (Yrs.)
Name	*Phone*	☐ < $1 million		☐YES
		☐ < $5 million		☐NO
Address		☐ < $10 million		*If YES list DBE #:*
	Fax	☐ < $15 million		
City State ZIP		☐ > $15 million		Age of Firm (Yrs.)

Distribution: 1) Original – Local Agency File

EXHIBIT 15-G CONSTRUCTION CONTRACT DBE COMMITMENT

1. Local Agency: _____ 2. Contract DBE Goal: _____

3. Project Description: _____

4. Project Location: _____

5. Bidder's Name: _____ 6. Prime Certified DBE: ☐ 7. Bid Amount: _____

8. Total Dollar Amount for **ALL** Subcontractors: _____ 9. Total Number of **ALL** Subcontractors: _____

10. Bid Item Number	11. Description of Work, Service, or Materials Supplied	12. DBE Certification Number	13. DBE Contact Information (Must be certified on the date bids are opened)	14. DBE Dollar Amount

Local Agency to Complete this Section

21. Local Agency Contract Number: _____

22. Federal-Aid Project Number: _____

23. Bid Opening Date: _____

24. Contract Award Date: _____

Local Agency certifies that all DBE certifications are valid and information on this form is complete and accurate.

25. Local Agency Representative's Signature _____ 26. Date _____

27. Local Agency Representative's Name _____ 28. Phone _____

29. Local Agency Representative's Title _____

15. TOTAL CLAIMED DBE PARTICIPATION $ _____ % _____

IMPORTANT: Identify all DBE firms being claimed for credit, regardless of tier. Names of the First Tier DBE Subcontractors and their respective item(s) of work listed above must be consistent, where applicable with the names and items of the work in the "Subcontractor List" submitted with your bid. Written confirmation of each listed DBE is required.

16. Preparer's Signature _____ 17. Date _____

18. Preparer's Name _____ 19. Phone _____

20. Preparer's Title _____

DISTRIBUTION: 1. Original – Local Agency
2. Copy – Caltrans District Local Assistance Engineer (DLAE). Failure to submit to DLAE within 30 days of contract execution may result in de-obligation of federal funds on contract. Include additional copy with award package.

ADA Notice: For individuals with sensory disabilities, this document is available in alternate formats. For information call (916) 654-6410 or TDD (916) 654-3880 or write Records and Forms Management, 1120 N Street, MS-89, Sacramento, CA 95814.

INSTRUCTIONS – CONSTRUCTION CONTRACT DBE COMMITMENT

CONTRACTOR SECTION

1. Local Agency - Enter the name of the local or regional agency that is funding the contract.
2. Contract DBE Goal - Enter the contract DBE goal percentage as it appears on the project advertisement.
3. Project Location - Enter the project location as it appears on the project advertisement.
4. Project Description - Enter the project description as it appears on the project advertisement (Bridge Rehab, Seismic Rehab, Overlay, Widening, etc).
5. Bidder's Name - Enter the contractor's firm name.
6. Prime Certified DBE - Check box if prime contractor is a certified DBE.
7. Bid Amount - Enter the total contract bid dollar amount for the prime contractor.
8. Total Dollar Amount for ALL Subcontractors – Enter the total dollar amount for all subcontracted contractors. SUM = (DBEs + all Non-DBEs). Do not include the prime contractor information in this count.
9. Total number of ALL subcontractors – Enter the total number of all subcontracted contractors. SUM = (DBEs + all Non-DBEs). Do not include the prime contractor information in this count.
10. Bid Item Number - Enter bid item number for work, services, or materials supplied to be provided.
11. Description of Work, Services, or Materials Supplied - Enter description of work, services, or materials to be provided. Indicate all work to be performed by DBEs including work performed by the prime contractor's own forces, if the prime is a DBE. If 100% of the item is not to be performed or furnished by the DBE, describe the exact portion to be performed or furnished by the DBE. See LAPM Chapter 9 to determine how to count the participation of DBE firms.
12. DBE Certification Number - Enter the DBE's Certification Identification Number. All DBEs must be certified on the date bids are opened.
13. DBE Contact Information - Enter the name, address, and phone number of all DBE subcontracted contractors. Also, enter the prime contractor's name and phone number, if the prime is a DBE.
14. DBE Dollar Amount - Enter the subcontracted dollar amount of the work to be performed or service to be provided. Include the prime contractor if the prime is a DBE. See LAPM Chapter 9 for how to count full/partial participation.
15. Total Claimed DBE Participation - $: Enter the total dollar amounts entered in the "DBE Dollar Amount" column. %: Enter the total DBE participation claimed ("Total Claimed DBE Participation Dollars" divided by item "Bid Amount"). If the total % claimed is less than item "Contract DBE Goal," an adequately documented Good Faith Effort (GFE) is required (see Exhibit 15-H DBE Information - Good Faith Efforts of the LAPM).
16. Preparer's Signature - The person completing the DBE commitment form on behalf of the contractor's firm must sign their name.
17. Date - Enter the date the DBE commitment form is signed by the contractor's preparer.
18. Preparer's Name - Enter the name of the person preparing and signing the contractor's DBE commitment form.
19. Phone - Enter the area code and phone number of the person signing the contractor's DBE commitment form.
20. Preparer's Title - Enter the position/title of the person signing the contractor's DBE commitment form.

LOCAL AGENCY SECTION

21. Local Agency Contract Number - Enter the Local Agency contract number or identifier.
22. Federal-Aid Project Number - Enter the Federal-Aid Project Number.
23. Bid Opening Date - Enter the date contract bids were opened.
24. Contract Award Date - Enter the date the contract was executed.
25. Local Agency Representative's Signature - The person completing this section of the form for the Local Agency must sign their name to certify that the information in this and the Contractor Section of this form is complete and accurate.
26. Date - Enter the date the DBE commitment form is signed by the Local Agency Representative.

27. Local Agency Representative's Name - Enter the name of the Local Agency Representative certifying the contractor's DBE commitment form.
28. Phone - Enter the area code and phone number of the person signing the contractor's DBE commitment form.
29. Local Agency Representative Title - Enter the position/title of the Local Agency Representative certifying the contractor's DBE commitment form.

EXHIBIT 15-H DBE INFORMATION — GOOD FAITH EFFORTS
DBE INFORMATION – GOOD FAITH EFFORTS

Federal-aid Project No. _____ Bid Opening Date _____

The _____Victorville_____established a Disadvantaged Business Enterprise (DBE) goal of 4.0% for this project. The information provided herein shows that a good faith effort was made.

Lowest, second lowest and third lowest bidders shall submit the following information to document adequate good faith efforts. Bidders should submit the following information even if the "Local Agency Bidder DBE Commitment" form indicates that the bidder has met the DBE goal. This will protect the bidder's eligibility for award of the contract if the administering agency determines that the bidder failed to meet the goal for various reasons, e.g., a DBE firm was not certified at bid opening, or the bidder made a mathematical error.

Submittal of only the "Local Agency Bidder DBE Commitment" form may not provide sufficient documentation to demonstrate that adequate good faith efforts were made.

The following items are listed in the Section entitled "Submission of DBE Commitment" of the Special Provisions:

A. The names and dates of each publication in which a request for DBE participation for this project was placed by the bidder (please attach copies of advertisements or proofs of publication):

Publications	Dates of Advertisement

B. The names and dates of written notices sent to certified DBEs soliciting bids for this project and the dates and methods used for following up initial solicitations to determine with certainty whether the DBEs were interested (please attach copies of solicitations, telephone records, fax confirmations, etc.):

Names of DBEs Solicited	Date of Initial Solicitation	Follow Up Methods and Dates

C. The items of work which the bidder made available to DBE firms including, where appropriate, any breaking down of the contract work items (including those items normally performed by the bidder with its own forces) into economically feasible units to facilitate DBE participation. It is the bidder's responsibility to demonstrate that sufficient work to facilitate DBE participation was made available to DBE firms.

Items of Work	Bidder Normally Performs Item (Y/N)	Breakdown of Items	Amount ($)	Percentage Of Contract

D. The names, addresses and phone numbers of rejected DBE firms, the reasons for the bidder's rejection of the DBEs, the firms selected for that work (please attach copies of quotes from the firms involved), and the price difference for each DBE if the selected firm is not a DBE:

Names, addresses and phone numbers of rejected DBEs and the reasons for the bidder's rejection of the DBEs:

_____
_____
_____
_____

Names, addresses and phone numbers of firms selected for the work above:

_____
_____
_____
_____

E. Efforts made to assist interested DBEs in obtaining bonding, lines of credit or insurance, and any technical assistance or information related to the plans, specifications and requirements for the work which was provided to DBEs:

_____
_____
_____
_____

F. Efforts made to assist interested DBEs in obtaining necessary equipment, supplies, materials or related assistance or services, excluding supplies and equipment the DBE subcontractor purchases or leases from the prime contractor or its affiliate:

_____
_____
_____
_____

G. The names of agencies, organizations or groups contacted to provide assistance in contacting, recruiting and using DBE firms (please attach copies of requests to agencies and any responses received, i.e., lists, Internet page download, etc.):

Name of Agency/Organization	Method/Date of Contact	Results

H. Any additional data to support a demonstration of good faith efforts (use additional sheets if necessary):

_____
_____

NOTE: USE ADDITIONAL SHEETS OF PAPER IF NECESSARY.

Accompanying this proposal is _____

(NOTICE: INSERT THE WORDS "CASH($___),"CASHIER'S CHECK," "CERTIFIED CHECK," OR "BIDDERS BOND," AS THE CASE MAY BE)

in amount equal to at least ten percent of the total of the bid.

The names of all persons interested in the forgoing proposal as principals are as follows:

IMPORTANT NOTICE: If the Bidder or other interested person is a corporation, state legal name of corporation, also names of the president, secretary, treasurer, and manager thereof; if a copartnership, state true name of firm, also names of all individual copartners composing firm; if bidder or other interested person is an individual, state first and last names in full.

_____

_____

Licensed in accordance with an act providing for the registration of Contractors,

License No. _____ Classification(s) _____

ADDENDA

This Proposal is submitted with respect to the changes to the Contract included in addenda number(s)

_____

(Fill in addenda numbers if addenda have been received and insert, in this Proposal, any Engineer's Estimate sheets that were received as part of the addenda.)

By my signature on this Proposal I certify, under penalty of perjury under the laws of the State of California, that the foregoing questionnaire and statements of Public Contract Code Sections 10162, 10232, and 10285.1 are true and correct and that the Bidder has complied with the requirements of Section 8103 of the Fair Employment and Housing Commission Regulations (Chapter 5, Title 2 of the California Administrative Code). By my signature on this proposal I further certify, under penalty of perjury under the laws of the State of California and the United States of America, that the Noncollusion Affidavit required by Title 23 United States Code, Section 112 and Public Contract Code Section 7106; and the Title 49 Code of Federal Regulations, Part 29 Debarment and Suspension Certification are true and correct.

Date: _____

Sign Here

_____

_____

_____

Signature and Title Bidder

Business Address_____

Place of Business_____

Place of Residence_____

CITY OF VICTORVILLE
DEPARTMENT OF PUBLIC WORKS

BIDDER'S BOND

We, _____

_____ as Principal, and

_____

as Surety are bound unto the City of Modesto, State of California, hereafter referred to as "Obligee", in the penal sum of ten percent (10%) of the total amount of the bid of the Principal submitted to the Obligee for the work described below, for the payment of which sum we bind ourselves, jointly and severally,

THE CONDITION OF THIS OBLIGATION IS SUCH, THAT:

WHEREAS, the Principal is submitted to the Obligee, for _____

_____

(Copy here the exact description of work, including location as it appears on the bid)

for which bids are to be opened at _____ on _____

(Insert place where bids will be opened) *(Insert date of bid opening)*

NOW, THEREFORE, if the Principal is awarded the contract and, within the time and manner required under the specifications, after the prescribed forms are presented to him for signature, enters into a written contract, in the prescribed form, in conformance with the bid, and files two bonds with the Obligee, one to guarantee faithful performance of the contract and the other to guarantee payment for labor and materials as provided by law, then this obligation shall be null and void; otherwise, it shall remain in full force.

In the event suit is brought upon this bond by the Obligee and judgement is recovered, the Surety shall pay all costs incurred by the Obligee in such suit, including a reasonable attorney's fee to be fixed by the court.

Dated: _____ , 20 ____ .

_____

_____

_____

Principal

_____

Surety

By _____

Attorney-in-fact

CERTIFICATE OF ACKNOWLEDGEMENT

State of California
City of Victorville

On this _____ day of _____ in the year 20___ before me

_____ , personally appeared _____ ,
Attorney-in-fact

personally known to me (or proved to me on the basis of satisfactory evidence) to be the person whose name is subscribed to this instrument as the attorney-in-fact of _____ , and acknowledged to me that he (she) subscribed the name of the said company thereto as surety, and his (her) own name as attorney-in-fact.

(SEAL) _____
Notary Public

CONTRACT (AGREEMENT)

CITY OF VICTORVILLE
BEAR VALLEY ROAD OVERHEAD AT BNSF RAILROAD
PROJECT NO. BHLS-5380 (026)

THIS AGREEMENT ("Agreement") approved by the City Council this _____ day of _____, in the year of 2017, made and concluded, in duplicate, between the CITY OF VICTORVILLE, a political subdivision of the State of California, by the Department of Public Works thereof, the party of the first part hereinafter called "City," and _____ party of the second part hereinafter called "Contractor."

WITNESSETH:
WHEREAS, City has caused the above-captioned project to be let to formal bidding process, and
WHEREAS, Contractor has duly submitted a bid response for the captioned project upon which City has awarded this contract;
NOW, THEREFORE, the parties hereto have mutually covenanted and agreed, and by these presents do covenant and agree, each with the other, as follows:

Article 1. THE WORK
The Contractor shall complete the Work as specified or indicated under the Bid Schedule(s) of the City's Contract Documents entitled:

BEAR VALLEY ROAD OVERHEAD AT BNSF RAILROAD
PROJECT NO. BHLS-5380 (026)

The project is located in the City of Victorville in Sab Bernardino County. The Work to be done is shown on the Plans, described in the Special Provisions.

Article 2. CONTRACT DOCUMENTS
The Contract Documents consist of: the Notice to Bidders; the bid forms which include the accepted Proposal, Bid Price Schedule and Total Bid, Subcontractors Listing, Equal Employment Opportunity Certification, Section 10285.1 Statement, Section 10162 Questionnaire, Section 10232 Statement, Noncollusion Affidavit, Bidder's Bond; the Contract which includes this Agreement, Workers Compensation Certificate, Performance Bond, and Payment Bond; the drawings listed and identified as the Project Plans; the Special Provisions and all Addenda incorporated in those documents before their execution, and all Contract Change Orders issued in accordance with the Contract Documents which may be delivered or issued after the Effective Date of this Agreement and are not attached hereto; the prevailing Labor Surcharge And Equipment Rental Rates (when required) as determined by the Department of Industrial Relations to be in effect on the date the Work is accomplished; and all the obligations of City and of Contractor which are fully set forth and described therein; all Contract Documents which are hereby specially referred to and by such reference made a part hereof. All Contract Documents are intended to cooperate so that any work called for in one and not mentioned in the other is to be executed the same as if mentioned in all Contract Documents. Contractor agrees to perform all of its promises, covenants, and conditions set forth in the Contract Documents, and to abide

by and perform all terms and conditions set forth therein. In case of conflict between this Agreement and any other contract document, this Agreement shall take precedence.

Article 3. COVENANTS AND CONTRACT PRICE

The City hereby promises and agrees with the said Contractor to employ, and does hereby employ, the said Contractor to provide the material and to do the Work according to the terms and conditions of the Contract Documents herein contained and referred to, for the prices hereinafter set forth, and hereby contracts to pay the same at the time, in the manner and upon the conditions herein set forth; and the said parties for themselves, their heirs, executors, administrators, successors and assigns, do hereby agree to the full performance of the covenants herein contained. The City shall pay the Contractor for the completion of the Work in accordance with the Contract Documents in current funds the Contract Prices named in the Contractor's Bid and Bid Price Schedule, a copy of which is attached hereto as Exhibit “A”.

Article 4. COMMENCEMENT AND COMPLETION

The Work to be performed under this Contract shall commence on the date specified in the Notice to Proceed by the City, and the Work shall be fully completed within the time specified in the Notice to Proceed pursuant to the Special Provisions.

The City and the Contractor recognize that time is of the essence of the Agreement and that the City will suffer financial loss if the Work is not completed within the time specified in the Special Provisions annexed hereto, plus any extensions thereof allowed in accordance with the Special Provisions. They also recognize the delays, expense, and difficulties involved with proving in a legal proceeding the actual loss suffered by the City if the Work is not completed on time. Accordingly, instead of requiring any such proof, the City and the Contractor agree that as liquidated damages for delay (but not as a penalty) the Contractor shall pay the City the sum of five thousand dollars ($5,000.00) for each calendar day the Work remains uncompleted after the time specified herein for the completion of the Work.

Article 5. INDEMNITY

To the fullest extent of the law, the Contractor shall defend, indemnify, and hold the City and its employees harmless against and from any and all claims, suits, losses, damages, and liability for damages, including attorney's fees and other costs of defense brought for or on account of injuries to or death of any person, including but not limited to, workers and the public, or on account of injuries to or death of City employees, or damage to property, or any economic consequential or special damages which are claimed or which shall in any way arise out of or be connected with Contractor's services, operations or performance hereunder, regardless of the existence or degree of fault or negligence on the part of the City, the Contractor, subcontractors or employee of any of these, except the active, or sole, negligence of the City, its officers and employees, where expressly prescribed by statute.

The duty to indemnify and hold harmless the City specifically includes the duties to defend set forth in Section 2778 of the Civil Code. The insurance obligations of the Contractor are separate, independent obligations under the Contract Documents, and the provision of this defense and indemnity are not intended to modify nor should they be construed as modifying or in any way limiting, the insurance obligations set forth in the Contract Documents.

Article 6. GUARANTEES

Contractor shall repair or replace any or all work provided hereunder which is defective due to faulty materials, poor workmanship, or defective equipment at no expense to the City, ordinary wear or tear and unusual abuse or neglect excepted, during the term of the contract and for a period of one year from the date of final accept the Work.

Contractor shall be required to repair or replace any and all adjacent facilities or areas which have been damaged or displaced due to contractor work performed under this Agreement at no expense to the City during the term of this Agreement and for a period of one year from the date of final acceptance of the Work.

The parties agree that this guarantee and the rights and obligations accruing therefrom shall be in addition to, and not by way of limitation in any manner whatsoever to, the rights, obligations, warranties or remedies otherwise provided for by law.

In the event of Contractor's failure to comply with the above mentioned conditions within ten (10) calendar days after being notified in writing by the City, Contractor hereby authorizes City to proceed to have said defects repaired and made good at Contractor's expense, and Contractor will honor and pay all costs and charges therefore upon written demand.

Article 7. DISPUTES RESOLUTION

a. CONTINUE WORK DURING DISPUTE: In the event of any dispute between the City and the Contractor, the Contractor will not stop Work but will prosecute the work diligently to completion in the manner directed by the City, and the dispute shall be resolved by a court of law after completion of the Work. However, all disputes must be submitted by Contractor in accordance with subsequent provisions of this section.
b. CITY'S REVIEW OF CLAIM: The City shall review the facts pertinent to the claim, secure assistance from legal and other advisors, coordinate with the contract administrators, and within the time stipulated in subsection “c” herein, render a written decision on the claim. A copy of the decision shall be furnished to the Contractor by certified mail, return receipt requested, or any other method that provides evidence of receipt. The decision of the City shall be made final and conclusive except as is otherwise provided herein.
c. REQUIREMENTS FOR FILING A CLAIM: For any Claim Subject to this section, the following requirements apply: The claim shall be in writing and include the documents necessary to substantiate the claim. Claims must be filed on or before the date of final payment. Nothing in this subdivision is intended to extend the time limit or supersede notice requirements otherwise provided by contract for the filing of claims.
    1. For claims of less than fifty thousand dollars ($50,000), the City shall respond in writing to any claim within 45 days of the receipt of the claim or may request, in writing, within 30 days of receipt of the claim, any additional documentation supporting the claim or relating to defenses or claims the City may have against the claimant. If additional information is thereafter required, it shall be requested and provided pursuant to this subdivision, upon mutual agreement of the City and the claimant. The City's written response to the claim, as further documented, shall be submitted to the claimant within 15 days after the receipt of the further documentation or within a period of time no greater than that taken by the claimant in producing the additional information, whichever is greater.

2. For claims of fifty thousand dollars ($50,000) or more, but less than or equal to three hundred seventy-five thousand dollars ($375,000), the City shall respond in writing to all written claims within 60 days of the receipt of the claim or may request, in writing, within 30 days of receipt of the claim, any additional documentation supporting the claim or relating to defenses or claims the City may have against the claimant. If additional information is thereafter required, it shall be requested and provided pursuant to this subdivision, upon mutual agreement of the City and the claimant. The City's written response to the claim, as further documented, shall be submitted to the claimant within 30 days after the receipt of the further documentation or within a period of time no greater than that taken by the claimant in producing the additional information, whichever is greater.
3. If the claimant disputes the City's written response, or the City fails to respond within the time prescribed, the claimant may so notify the City, in writing, either within 15 days of the City's response or within 15 days of the City's failure to respond within the time prescribed, respectively, and demand an informal conference to meet and confer for the settlement of the issues in dispute. Upon a demand, the City shall schedule a meet and confer conference within 30 days for settlement of the dispute.
4. If following the meet and confer conference the claim or any portion remains in dispute, the claimant may file a claim pursuant to Chapter 1 (commencing with Section 900) and Chapter 2 (commencing with Section 910) of Part 3 of Division 3.6 of Title 1 of the Government Code. For the purpose of these provisions, the running of the period of time within which a claim must be filed shall be tolled from the time the claimant submits a written claim pursuant to subdivision (a) until the time the claim is denied as a result of the meet and confer process, including any period of time utilized by the meet and confer conference.

d. CLAIMS EXEMPT FROM REVIEW: The procedures and remedies provided in this Article 7 do not apply to:
    1. Any claims by the City.
    2. Any claims for or respecting personal injury or death or reimbursement or other compensation arising out of or resulting from liability for personal injury or death.
    3. Any claim or dispute relating to stop payment requests or stop notices.
    4. Any claim related to the approval, refusal to approve, or substitution of subcontractors, regardless of tier, and suppliers.

e. PROCEDURE TO RESOLVE CIVIL CLAIMS: The City and Contractor shall follow procedures established for all civil actions filed to resolve claims pursuant to Section 20104.4 of the Public Contract Code.

f. PAYMENT OF UNDISPUTED PORTION OF CLAIM: Payment by City of undisputed portion of claim; interest on arbitration award or judgment.
    1. City shall pay such portion of a claim which is undisputed except as otherwise provided in the Contract.
    2. In any suit filed under Section 20104.4, of the Public Contract Code, the City shall pay interest at the legal rate on any arbitration award or judgment. The interest shall begin to accrue on the date the suit is filed in a court of law.

g. SUIT IN SAN BERNARDINO COUNTY ONLY: Any litigation arising out of this Contract shall be brought in San Bernardino County and the Contractor hereby waives the removal provisions of California Code of Civil Procedure Section 394.

Article 8. ASSIGNMENT OF ANTITRUST ACTIONS

In entering into a public works contract or a subcontract to supply goods, services, or materials pursuant to a public works contract the contractor or subcontractor offers and agrees to assign the awarding body all rights, title, and interest in and to all causes of action it may have under Section 4 of the Clayton Act (15 U.S.C. Sec. 15) or under the Cartwright Act (Chapter 2 (commencing with Section 16700) of Part 2 of Division 7 of the Business and Professions Code), arising from purchases of goods, services, or materials pursuant to the public works contract or the subcontract. This assignment shall be made and become effective at the time the awarding body tenders final payment to the contractor, without further acknowledgment by the parties.

If an awarding body or public purchasing body receives, either through judgment or settlement, a monetary recovery for a cause of action assigned under this chapter, the assignor shall be entitled to receive reimbursement for actual legal costs incurred and may, upon demand, recover from the public body any portion of the recovery, including treble damages, attributable to overcharges that were paid by the assignor but were not paid by the public body as part of the bid price, less the expenses incurred in obtaining that portion of the recovery. Upon demand in writing by the assignor, the assignee shall, within one year from such demand, reassign the cause of action assigned under this part if the assignor has been or may have been injured by the violation of law for which the cause of action arose and (a) the assignee has not been injured thereby, or (b) the assignee declines to file a court action for the cause of action."

Article 9. TERMINATION BY OWNER FOR CONVENIENCE

The City reserves the right to terminate the Contract at any time upon determination by the City's Representative that termination of the Contract is in the best interest of the City. City shall issue the Contractor a written notice specifying that the Contract is to be terminated.

Upon receipt of said written notice, Contractor shall stop all work under the Contract except: (1) work specifically directed to be completed prior to termination, (2) work the Inspector deems necessary to secure the project for termination, (3) removal of equipment and plant from the site of the Work, (4) action that is necessary to protect materials from damage, (5) disposal of materials not yet used in the Work as directed by the City, and (6) clean up of the site.

If the Contract is terminated for the City's convenience as provided herein, all finished or unfinished work and materials previously paid for shall, at the option of City, become its property. Contractor shall be paid an amount which reflects costs incurred for work provided to the date of notification of termination. In addition, Contractor shall be paid the reasonable cost, as solely judged by City, and without profit, for all work performed to secure the project for termination.

Article 10. TERMINATION BY OWNER FOR CAUSE

If the Contractor is adjudged as bankrupt or insolvent, or makes a general assignment for the benefit of its creditors or if a trustee or receiver is appointed for the Contractor or for any of its property, or if Contractor files a petition to take advantage of any debtor's act, or to reorganize under the bankruptcy or applicable laws, or on more than one occasion fails to supply sufficient skilled workmen or suitable material or equipment, or on more than one occasion fails to make prompt payments to subcontractors for labor, materials, or equipment, or disregards the authority of the City's Representative, or the Engineer, if one is appointed, or otherwise violates any provision of the Contract Documents, then the City may, without prejudice to any other right or remedy and after giving the Contractor and its Surety a minimum of 10 days from delivery of a written termination notice, terminate the services of the

Contractor and take equipment and machinery thereon owned by the Contractor and finish the Work by whatever method the City may deem expedient. In such case, the Contractor shall not be entitled to receive any further payment until the Work is finished.

Without prejudice to other rights or remedies the City may have, if the Contractor fails to begin delivery of materials and equipment, to commence Work within the time specified, to maintain the rate of delivery of material, to execute the Work in the manner and at such locations as specified, or fails to maintain a work program which will ensure the City's interest, or, if the Contractor is not carrying out the intent of the Contract, an Inspector's written notice may be served upon the Contractor and the Surety on its faithful performance bond demanding satisfactory compliance with the Contract. If the Contractor or its Surety does not comply with such notice within 5 days after receiving it, or after starting to comply, fails to continue, the City may exclude it from the premises and take possession of all material and equipment, and complete the Work by City's own forces, by letting the unfinished Work to another Contractor, or by a combination of such methods.

Where the Contractor's services have been so terminated by the City, said termination shall not affect any right of the City against the Contractor then existing or which may thereafter accrue. Any retention or payment of monies by the City due the Contractor will not release the Contractor from compliance with the Contract Documents.

If the unpaid balance of the Contract price exceeds the direct and indirect costs of completing the Work, including compensation for additional professional services, such excess shall be paid to the Contractor. If the sums under the Contract are insufficient for completion, the Contractor or Surety shall pay to the City within 5 days after the completion, all costs in excess of the Contract price. In any event, the cost of completing the Work shall be charged against the Contractor and its Surety and may be deducted from any money due or becoming due from the City.

If the Surety assumes any part of the Work, it shall take the Contractor's place in all respect for that part and shall be paid by the City for all Work performed by it in accordance with the Contract. If the Surety assumes the entire Contract, all money due the Contractor at the time of its default shall be payable to the Surety as the work progresses, subject to the terms of this Contract.

The provisions of the section shall be in addition to all other rights and remedies available to the City under law.

If after notice of termination, it is determined for any reason that the Contractor was not in default, the rights and obligations of the parties shall be the same as if the notice of termination had not been issued. The Contract shall be equitably adjusted to compensate for such termination.

Article 11. WORKERS COMPENSATION CERTIFICATION

Contractor warrants and represents that he is aware of the provisions of Section 3700 of the California Labor Code which require every employer to be insured against liability for workers compensation or to undertake self-insurance in accordance with the provisions of that Code. Pursuant to the provisions of California Civil Code sections 1860, 1861, and prior to commencement of work, the Contractor shall sign and file with the City Project Administrator a certification in the form prescribed in section 1861.

Article 12. WARRANTY

The Contractor warrants to the City that materials and equipment furnished for the Work will be good quality and new, unless otherwise required or permitted under the Contract Documents, that the Work will be free from defects or flaws and is of the highest quality of workmanship and that the Work will conform with the requirements herein. Work not conforming to these requirements, including substitutions not properly approved and authorized, shall be considered defective.

Article 13. RETAINAGE

All progress payments will be subject to a five percent (5%) withholding of estimated value of the work and fifty percent (50%) of the estimated materials pending final completion of the project. If by judgment of the City Engineer, work is not in accordance with provisions of the contract, no payment shall be made. No payment shall be made when by judgment of the City of Victorville the total value of work since the last payment amounts to less than $500.00. The Contractor may elect to receive 100 percent of payments due as set forth in the Contract Documents, without retention, by depositing securities of equivalent value with the City, or with a State or Federally chartered bank as the Escrow agent, in accordance with, and as set forth in Section 22300 of the Public Contract Code.

Article 14. AUTHORIZED SIGNATURES

The parties hereto represent that the undersigned individuals executing this Agreement on behalf of their respective parties are fully authorized to do so by law or other appropriate instrument and to bind upon said parties the obligations set forth herein.

IN WITNESS WHEREOF, the said Department of Public Works of the City of Victorville, State of California, has caused this Agreement to be executed by the City Council of the City of Victorville, in its behalf, and the said Contractor has signed this Agreement the day and year written below.

CITY OF VICTORVILLE

Dated _____ _____

City Manager, City of Victoville

CONTRACTOR

Dated _____ _____

Name of Company

By _____ _____ _____

Authorized Representative **License No.** **Federal Employer Identification No.**

NOTE: If Contractor is a corporation, the legal name of the corporations shall be set forth above together with the signature of the officer or officers authorized to sign contracts on behalf of the corporation; if Contractor is a co-partnership, the true name of the firm shall be set forth above together with the signature of the partner or partners authorized to sign contracts in behalf of the co-partnership; and if Contractor is an individual, his/her signature shall be placed above. Contractor executing this document on behalf of a corporation or partnership shall be prepared to demonstrate by resolution, article, or otherwise that they are appropriately authorized to act in these regards. For such corporation or partnership, such authority shall be demonstrated to the satisfaction of City. If signature is by an agent, other than officer of a corporation or a member of a partnership, an appropriate Power of Attorney shall be on file with the City prior to signing this document.

Mailing Address: _____

Business Address: _____

City, Zip: _____

Phone: _____ **Fax:** _____

ATTACHMENT: EXHIBIT "A", Contractors Bid and Bid Price Schedule

END OF CONTRACT

CITY OF VICTORVILLE
DEPARTMENT OF PUBLIC WORKS

PAYMENT BOND
(Section 3247, Civil Code)

Bond No. _____

WHEREAS, the City of Placerville, Department of Public Works, hereafter referred to as "Obligee", has awarded to Contractor _____
hereafter referred to as "Principal"' a contract for the work described as follows:

BEAR VALLEY ROAD OVERHEAD AT BNSF RAILROAD

PROJECT NO. BHLS-5380 (026)

AND, WHEREAS, said Principal is required to furnish a bond in connection with said contract, guaranteeing the faithful performance thereof: NOW, THEREFORE, we the undersigned Principal and Surety are held and firmly bound unto the Obligee, in the sum of _____
_____Dollars, ($_____) to be paid to the Obligee, for which payment we bind ourselves, jointly and severally.

THE CONDITION OF THIS OBLIGATION IS SUCH,
That is said Principal or its subcontractors shall pay any of the persons named in Civil Code Section 3181, or amounts required to be deducted, Unemployment Insurance Code with respect to work or labor performed by such claimant, or any amounts required to be deducted, withheld, and paid over to the Franchise Tax Board from the wages of employees or the Principal and his subcontractors pursuant to Section 18806 of the Revenue and Taxation Code, with respect to such work an labor, that the surety herein will pay for the same in an amount not exceeding the sum specified in this bond, otherwise the above obligation shall be void. In case suit is brought upon this bond, the surety will pay a reasonable attorney's fee to be fixed by the court.

This bond shall inure to the benefit of any of the persons named in Civil Code Section 3181 as to give right of action to such persons or their assigns in any suit brought upon this bond.

Dated: _____, 20_____.

Correspondence or Claims relating to this bond should be sent to the Surety at the following address:

_____ _____
PRINCIPAL

_____ _____
SURETY

_____ _____
ATTORNEY-IN-FACT

NOTE: Signatures of those executing for the surety must be properly acknowledged and a Power of Attorney attached.

CERTIFICATE OF ACKNOWLEDGEMENT

State of California, County of _____ss.
On this _____day of _____ in the year of _____, before me _____, personally appeared _____, personally known to be (or proved to me on the basis of satisfactory evidence) to be the person whose name is subscribed to this instrument as the attorney in fact of _____, and acknowledged to me that he subscribed the name of the said company thereto as surety, and his own name as attorney-of-fact.

_____

(SEAL) **Notary Public**

CITY OF VICTORVILLE
DEPARTMENT OF PUBLIC WORKS

PERFORMANCE BOND

Bond No._____

The condition of the above obligation is that if said Principal as Contractor in the Contract hereto annexed shall faithfully perform each and all of the conditions of said Contract to be performed by him, and shall furnish all tools, equipment, apparatus, facilities, transportation, labor and material, other than material, if any, agreed to be furnished by the Obligee, necessary to perform and complete, and to perform and complete in a good and workmanlike manner, the work of ***Western Placerville Interchanges Project Phase 1B, Project No. 41413*** in strict conformity with the terms and conditions set forth in the Contract hereto annexed, then this obligation shall be null and void,; otherwise bond shall remain in full force and effect and the said Surety will complete the Contract work under its own supervision by Contract or otherwise, and pay all costs thereof for the balance due under terms of the Contract, and the said Surety, for value received, hereby stipulates and agrees that no change, extension of time, alteration or addition to the terms of the Contract or to the work to be performed thereunder shall in any wise affect its obligation on this bond, and it does hereby waive notice of any such change, extension or time, alteration of addition to the terms of the Contract or to the work.

Dated: _____, 20_____.

Correspondence or Claims relating to this bond should be sent to the Surety at the following address:

_____ _____
PRINCIPAL

_____ _____
SURETY

_____ _____
ATTORNEY-IN-FACT

NOTE: Signatures of those executing for the surety must be properly acknowledged and a Power of Attorney attached.

CERTIFICATE OF ACKNOWLEDGEMENT

State of California, County of _____ss.
On this _____day of _____ in the year of _____, before me _____, personally appeared _____, personally known to be (or proved to me on the basis of satisfactory evidence) to be the person whose name is subscribed to this instrument as the attorney in fact of _____, and acknowledged to me that he subscribed the name of the said company thereto as surety, and his own name as attorney-of-fact.

_____
(SEAL) Notary Public

SECTION D - GENERAL SPECIFICATIONS

BEAR VALLEY ROAD OVERHEAD AT BNSF RAILROAD

PROJECT NO. BHLS-5380 (026)

SCOPE OF WORK

The work to be done consists of furnishing all materials, equipment, tools, labor, and incidentals necessary to complete the work of the "BEAR VALLEY ROAD OVERHEAD AT BNSF RAILROAD" as shown the plans and/or specified herein. The project will widen Bear Valley Road to accommodate 6 twelve foot lanes, a twelve foot striped median, 2 eight foot shoulders and sidewalks on both sides of the road.

LOCATION OF WORK

The general location and limits of work is **BEAR VALLEY ROAD BETWEEN INDUSTRIAL BOULEVARD AND RIDGECREST ROAD**.

TIME OF COMPLETION

The CONTRACTOR shall complete all work in every detail within two-hundred eighty **(280) working days** after the date stated in the Notice to Proceed with Work.

NOTIFICATION

The CONTRACTOR shall notify the AGENCY not less than (2) working days prior to start of work. The CONTRACTOR shall also call Underground Service Alert at (800) 227-2600 as required.

EMERGENCY INFORMATION

The names, addresses, and telephone numbers of the CONTRACTOR and SUBCONTRACTORs shall be filed with the City and the County Sheriff's Department on the day of the pre-construction meeting.

STANDARD SPECIFICATIONS

The Standard Specifications of the AGENCY are contained in the 2015 Edition of the Standard Specifications for Public Works Construction, commonly referred to as the "Greenbook," written and promulgated by Public Works Standards, Inc. and published by BNi Building News, 990 Park Center Drive, Suite E, Vista, California 92801, telephone 1-760-734-1113.

Additionally in these Special Provisions, reference is made to the 2015 Edition of the Caltrans Standard Specifications, referred to herein as the "State Standard Specifications".

The State Standard Specifications set forth above control the general provisions, construction materials, and construction methods for this contract except as amended by the Plans, Special Provisions, or other

contract documents. The following Special Provisions are supplementary and in addition to the provisions of the State Standard Specifications and Standard Specifications unless otherwise noted, and the section numbers of the Special Provision coincide with those of the said Standard Specifications. Only those sections requiring elaboration, amendments, specifying of options, or additions are called out. Other standards or specifications specified in these Special Provisions govern only the applicable technical specifications unless otherwise specified in these Special Provisions.

SECTION E – SPECIAL PROVISIONS

BEAR VALLEY ROAD OVERHEAD AT BNSF RAILROAD

PROJECT NO. BHLS-5380 (026)

PART 2: CONSTRUCTION MATERIALS

The construction materials for this contract shall be in conformance with the State Standard Specifications or Part 2, "Construction Materials," of the Standard Specifications for Public Works Construction, 2015 Edition, except as amended and/or superseded below and in the Special Provisions Technical:

SECTION 203 –BITUMOUS MATERIALS

ADD THE FOLLOWING TO SECTION 203-6.1:

Asphalt Concrete surface course or overlay shall be ¾ - inch maximum aggregate C2-PG 70-10 with 15% maximum reclaimed asphalt pavement (RAP).

PART 3: CONSTRUCTION METHODS

The construction methods for this contract shall be in conformance with the State Standard Specifications or Part 3, "Construction Methods," of the Standard Specifications for Public Works Construction, 2015 Edition, except as amended and/or superseded below and in the Special Provisions Technical:

SECTION 302 –ROADWAY SURFACING

ADD THE FOLLOWING TO SECTION 302-5.1:

Roadways to receive full-width cold milling shall be resurfaced within 72 hours of the completion of cold milling.

ADD THE FOLLOWING TO SECTION 302-5.5:

The spreading and finishing machine shall be equipped with fully automatic screeds. A fully automatic screed shall have a 30-foot long sled.

Where the pavement slopes towards a concrete gutter, HMA pavement shall be placed such that the pavement surface is one-quarter inch plus or minus one-eighth inch (1/4” ± 1/8”) above the lip of gutter elevation.

Where the pavement slopes away from a concrete gutter, HMA pavement shall be placed such that the pavement surface is flush with the lip of gutter elevation unless otherwise directed by the Engineer.

ADD THE FOLLOWING TO SECTION 302-5.5:

Longitudinal joints shall coincide with traffic lane lines unless otherwise approved by the Engineer.

SECTION F – SPECIAL CONDITIONS

BEAR VALLEY ROAD OVERHEAD AT BNSF RAILROAD

PROJECT NO. BHLS-5380 (026)

FEDERAL FUNDING REQUIREMENTS.

This Project is receiving federal and the Contractor shall comply with all conditions required by the California Department of Transportation and Federal Highway Administration including, but not limited to, the following:

Disadvantaged Business Enterprise (DBE)

Under 49 CFR 26.13(b):

> The contractor, subrecipient or subcontractor shall not discriminate on the basis of race, color, national origin, or sex in the performance of this contract. The contractor shall not carry out applicable requirements of 49 CFR part 26 in the award and administration of DOT-assisted contracts. Failure by the contractor to carry out these requirements is a material breach of this contract, which may result in the termination of this contract or such other remedy as the recipient deems appropriate.
>
> Take necessary and reasonable steps to ensure that DBEs have opportunity to participate in the contract (49 CFR 26).
>
> To ensure equal participation of DBEs provided in 49 CFR 26.5, the Agency shows a goal for DBEs.
>
> Make work available to DBEs and select work parts consistent with available DBE subcontractors and suppliers
>
> The Contractor must meet the DBE goal shown elsewhere in these special provisions or demonstrate that it made adequate good faith efforts to meet this goal.
>
> It is Contractor's responsibility to verify that the DBE firm is certified as DBE at date of bid opening. For a list of DBEs certified by the California Unified Certification Program, go to: http://www.dot.ca.gov/hq/bep/find_certified.htm.
>
> All DBE participation will count toward the California Department of Transportation's federally mandated statewide overall DBE goal.
>
> Credit for materials or supplies Contractor purchases from DBEs counts towards the goal in the following manner:
>
> - 100 percent counts if the materials or supplies are obtained from a DBE manufacturer.

- 60 percent counts if the materials or supplies are obtained from a DBE regular dealer.

- Only fees, commissions, and charges for assistance in the procurement and delivery of materials or supplies count if obtained from a DBE that is neither a manufacturer nor regular dealer. 49 CFR 26.55 defines "manufacturer" and "regular dealer."

Contractor will receive credit towards the goal if it employs a DBE trucking company that performs a commercially useful function as defined in 49 CFR 26.55(d)(1) through (4) and (6).

a. DBE Commitment Submittal

Submit the Exhibit 15-G *Local Agency Bidder DBE Commitment (Construction Contracts)* form, included in the Bid book. If the form is not submitted with the bid, remove the form from the Bid book before submitting your bid.

If the DBE Commitment form is not submitted with the bid, the apparent low bidder, the 2nd low bidder, and the 3rd low bidder must complete and submit the DBE Commitment form to the Agency. DBE Commitment form must be received by the Agency no later than 4:00 p.m. on the 4th business day after bid opening.

Other bidders do not need to submit the DBE Commitment form unless the Agency requests it. If the Agency requests you to submit a DBE Commitment form, submit the completed form within 4 business days of the request.

Submit written confirmation from each DBE stating that it is participating in the contract. Include confirmation with the DBE Commitment form. A copy of a DBE's quote will serve as written confirmation that the DBE is participating in the contract.

If you do not submit the DBE Commitment Form within the specified time, the Agency will find your bid nonresponsive.

b. Good Faith Efforts Submittal

If you have not met the DBE goal, complete and submit the DBE Information - Good Faith Efforts, Exhibit 15-H, form with the bid showing that you made adequate good faith efforts to meet the goal. Only good faith efforts directed towards obtaining participation by DBEs will be considered. If good faith efforts documentation is not submitted with the bid, it must be received by the Agency no later than 4:00 p.m. on the 4th business day after bid opening.

If your DBE Commitment form shows that you have met the DBE goal or if you are required to submit the DBE Commitment form, you must also submit good faith efforts documentation within the specified time to protect your eligibility for award of the contract in the event the Agency finds that the DBE goal has not been met.

Good faith efforts documentation must include the following information and supporting documents, as necessary:

i. Items of work you have made available to DBE firms. Identify those items of work you might otherwise perform with your own forces and those items that have been broken down into economically feasible units to facilitate DBE participation. For each item listed, show the dollar value and percentage of the total contract. It is your responsibility to demonstrate that sufficient work to meet the goal was made available to DBE firms.

ii. Names of certified DBEs and dates on which they were solicited to bid on the project. Include the items of work offered. Describe the methods used for following up initial solicitations to determine with certainty if the DBEs were interested, and the dates of the follow-up. Attach supporting documents such as copies of letters, memos, facsimiles sent, telephone logs, telephone billing statements, and other evidence of solicitation. You are reminded to solicit certified DBEs through all reasonable and available means and provide sufficient time to allow DBEs to respond.

iii. Name of selected firm and its status as a DBE for each item of work made available. Include name, address, and telephone number of each DBE that provided a quote and their price quote. If the firm selected for the item is not a DBE, provide the reasons for the selection.

iv. Name and date of each publication in which you requested DBE participation for the project. Attach copies of the published advertisements.

v. Names of agencies and dates on which they were contacted to provide assistance in contacting, recruiting, and using DBE firms. If the agencies were contacted in writing, provide copies of supporting documents.

vi. List of efforts made to provide interested DBEs with adequate information about the plans, specifications, and requirements of the contract to assist them in responding to a solicitation. If you have provided information, identify the name of the DBE assisted, the nature of the information provided, and date of contact. Provide copies of supporting documents, as appropriate.

vii. List of efforts made to assist interested DBEs in obtaining bonding, lines of credit, insurance, necessary equipment, supplies, and materials, excluding supplies and equipment that the DBE subcontractor purchases or leases from the prime contractor or its affiliate. If such assistance is provided by you, identify the name of the DBE assisted, nature of the assistance offered, and date assistance was provided. Provide copies of supporting documents, as appropriate.

viii. Any additional data to support demonstration of good faith efforts.

The Agency may consider DBE commitments of the 2nd and 3rd bidders when determining whether the low bidder made good faith efforts to meet the DBE goal.

c. Exhibit 15-G – Local Agency Bidder DBE Information (Construction Contracts)

Complete and sign Exhibit 15-G Local Agency Bidder DBE Commitment (Construction Contracts) included in the contract documents regardless of whether DBE participation is reported.

Provide written confirmation from each DBE that the DBE is participating in the Contract. A copy of the DBE's quote serves as written confirmation. If a DBE is participating as a joint venture partner, the Agency encourages you to submit a copy of the joint venture agreement.)

d. Subcontractor and Disadvantaged Business Enterprise Records

Use each DBE subcontractor as listed on Exhibit 12-B Bidder's List of Subcontractors (DBE and Non-DBE) and Exhibit 15-G Local Agency Bidder DBE Commitment (Construction Contracts) form unless you receive authorization for a substitution.

The Agency requests the Contractor to:

i. Notify the Engineer of any changes to its anticipated DBE participation

ii. Provide this notification before starting the affected work

iii. Maintain records including:

- Name and business address of each 1st-tier subcontractor
- Name and business address of each DBE subcontractor, DBE vendor, and DBE trucking company, regardless of tier
- Date of payment and total amount paid to each business

If you are a DBE contractor, include the date of work performed by your own forces and the corresponding value of the work.

Before the 15th of each month, submit a Monthly DBE Trucking Verification form.

If a DBE is decertified before completing its work, the DBE must notify you in writing of the decertification date. If a business becomes a certified DBE before completing its work, the business must notify you in writing of the certification date. Submit the notifications. On work completion, complete a Disadvantaged Business Enterprises (DBE) Certification Status Change, Exhibit 17-O, form. Submit the form within 30 days of contract acceptance.

Upon work completion, complete Exhibit 17-F Final Report – Utilization of Disadvantaged Business Enterprises (DBE), First-Tier Subcontractors. Submit it within 90 days of contract acceptance. The Agency will withhold $10,000 until the form is submitted. The Agency releases the withhold upon submission of the completed form.

e. Performance of Disadvantaged Business Enterprises

DBEs must perform work or supply materials as listed in the Exhibit 15-G Local Agency Bidder DBE Commitment (Construction Contracts) form, included in the Bid.

Do not terminate or substitute a listed DBE for convenience and perform the work with your own forces or obtain materials from other sources without authorization from the Agency.

The Agency authorizes a request to use other forces or sources of materials if it shows any of the following justifications:

i. Listed DBE fails or refuses to execute a written contract based on plans and specifications for the project.

ii. You stipulated that a bond is a condition of executing the subcontract and the listed DBE fails to meet your bond requirements.

iii. Work requires a contractor's license and listed DBE does not have a valid license under Contractors License Law.

iv. Listed DBE fails or refuses to perform the work or furnish the listed materials.

v. Listed DBE's work is unsatisfactory and not in compliance with the contract.

vi. Listed DBE is ineligible to work on the project because of suspension or debarment.

vii. Listed DBE becomes bankrupt or insolvent.

viii. Listed DBE voluntarily withdraws with written notice from the Contract

ix. Listed DBE is ineligible to receive credit for the type of work required.

x. Listed DBE owner dies or becomes disabled resulting in the inability to perform the work on the Contract.

xi. Agency determines other documented good cause.

Notify the original DBE of your intent to use other forces or material sources and provide the reasons. Provide the DBE with 5 days to respond to your notice and advise you and the Agency of the reasons why the use of other forces or sources of materials should not occur. Your request to use other forces or material sources must include:

i. One or more of the reasons listed in the preceding paragraph

ii. Notices from you to the DBE regarding the request

iii. Notices from the DBEs to you regarding the request

If a listed DBE is terminated or substituted, you must make good faith efforts to find another DBE to substitute for the original DBE. The substitute DBE must perform at least the same amount of work as the original DBE under the contract to the extent needed to meet the DBE goal.

The substitute DBE must be certified as a DBE at the time of request for substitution.

Unless the Agency authorizes (1) a request to use other forces or sources of materials or (2) a good faith effort for a substitution of a terminated DBE, the Agency does not pay for work listed on the Exhibit 15-G Local Agency Bidder DBE Commitment (Construction Contracts) form unless it is performed or supplied by the listed DBE or an authorized substitute.

Bid Opening

The Agency publicly opens and reads bids at the time and place shown on the Notice to Bidders.

Bid Rigging

The U.S. Department of Transportation (DOT) provides a toll-free hotline to report bid rigging activities. Use the hotline to report bid rigging, bidder collusion, and other fraudulent activities. The hotline number is (800) 424-9071. The service is available 24 hours a day, 7 days a week and is confidential and anonymous. The hotline is part of the DOT's effort to identify and investigate highway construction contract fraud and abuse and is operated under the direction of the DOT Inspector General.

Contract Award

If the Agency awards the contract, the award is made to the lowest responsible and responsive bidder.

Contractor License

The Contractor must be properly licensed as a contractor from contract award through Contract acceptance (Public Contract Code § 10164).

Changed Conditions

a. Differing Site Conditions

1. During the progress of the work, if subsurface or latent physical conditions are encountered at the site differing materially from those indicated in the contract or if unknown physical conditions of an unusual nature, differing materially from those ordinarily encountered and generally recognized as inherent in the work provided for in the contract, are encountered at the site, the party discovering such conditions shall promptly notify the other party in writing of the specific differing conditions before the site is disturbed and before the affected work is performed.
2. Upon written notification, the engineer will investigate the conditions, and if it is determined that the conditions materially differ and cause an increase or decrease in the cost or time required for the performance of any work under the contract, an adjustment, excluding anticipated profits,

will be made and the contract modified in writing accordingly. The engineer will notify the contractor of the determination whether or not an adjustment of the contract is warranted.

3. No contract adjustment which results in a benefit to the contractor will be allowed unless the contractor has provided the required written notice.
4. No contract adjustment will be allowed under this clause for any effects caused on unchanged work. (This provision may be omitted by the Local Agency, at their option.)

b. Suspensions of Work Ordered by the Engineer

1. If the performance of all or any portion of the work is suspended or delayed by the engineer in writing for an unreasonable period of time (not originally anticipated, customary, or inherent to the construction industry) and the contractor believes that additional compensation and/or contract time is due as a result of such suspension or delay, the contractor shall submit to the engineer in writing a request for adjustment within 7 calendar days of receipt of the notice to resume work. The request shall set forth the reasons and support for such adjustment.
2. Upon receipt, the engineer will evaluate the contractor's request. If the engineer agrees that the cost and/or time required for the performance of the contract has increased as a result of such suspension and the suspension was caused by conditions beyond the control of and not the fault of the contractor, its suppliers, or subcontractors at any approved tier, and not caused by weather, the engineer will make an adjustment (excluding profit) and modify the contract in writing accordingly. The contractor will be notified of the engineer's determination whether or not an adjustment of the contract is warranted.
3. No contract adjustment will be allowed unless the contractor has submitted the request for adjustment within the time prescribed.
4. No contract adjustment will be allowed under this clause to the extent that performance would have been suspended or delayed by any other cause, or for which an adjustment is provided or excluded under any other term or condition of this contract.

c. Significant Changes in the Character of Work

1. The engineer reserves the right to make, in writing, at any time during the work, such changes in quantities and such alterations in the work as are necessary to satisfactorily complete the project. Such changes in quantities and alterations shall not invalidate the contract nor release the surety, and the contractor agrees to perform the work as altered.

2. If the alterations or changes in quantities significantly change the character of the work under the contract, whether such alterations or changes are in themselves significant changes to the character of the work or by affecting other work cause such other work to become significantly different in character, an adjustment, excluding anticipated profit, will be made to the contract. The basis for the adjustment shall be agreed upon prior to the performance of the work. If a basis cannot be agreed upon, then an adjustment will be made either for or against the contractor in such amount as the engineer may determine to be fair and equitable.

3. If the alterations or changes in quantities do not significantly change the character of the work to be performed under the contract, the altered work will be paid for as provided elsewhere in the contract.

4. The term “significant change” shall be construed to apply only to the following circumstances:

- When the character of the work as altered differs materially in kind or nature from that involved or included in the original proposed construction; or

- When a major item of work, as defined elsewhere in the contract, is increased in excess of 125 percent or decreased below 75 percent of the original contract quantity. Any allowance for an increase in quantity shall apply only to that portion in excess of 125 percent of original contract item quantity, or in case of a decrease below 75 percent, to the actual amount of work performed.

Beginning of Work, Time of Completion and Liquidated Damages

The Contractor shall begin work within 15 calendar days after the issuance of the Notice to Proceed. This work shall be diligently prosecuted to completion before the expiration of TEN (10) WORKING DAYS beginning on the fifteenth calendar day after the date shown on the Notice to Proceed. The Contractor shall pay to the City/County the sum of $_____per day, for each and every calendar days' delay in finishing the work in excess of the number of working days prescribed above.

Buy America

Furnish steel and iron materials to be incorporated into the work with certificates of compliance. Steel and iron materials must be produced in the U.S. except:

a. Foreign pig iron and processed, pelletized, and reduced iron ore may be used in the domestic production of the steel and iron materials [60 Fed Reg 15478 (03/24/1995];

b. If the total combined cost of the materials does not exceed the greater of 0.1 percent of the total bid or $2,500, materials produced outside the U.S. may be used.

Production includes:

a. Processing steel and iron materials, including smelting or other processes that alter the physical form or shape (such as rolling, extruding, machining, bending, grinding, and drilling) or chemical composition;

b. Coating application, including epoxy coating, galvanizing, and painting, that protects or enhances the value of steel and iron materials.

Quality Assurance

The Agency uses a Quality Assurance Program (QAP) to ensure a material is produced to comply with the Contract.

Prompt Payment of Funds Withheld to Subcontractors

The agency shall hold retainage from the prime contractor and shall make prompt and regular incremental acceptances of portions, as determined by the agency, of the contract work, and pay retainage to the prime contractor based on these acceptances. The prime contractor, or subcontractor, shall return all

monies withheld in retention from a subcontractor within 30 days after receiving payment for work satisfactorily completed and accepted including incremental acceptances of portions of the contract work by the agency. Federal law (49CFR26.29) requires that any delay or postponement of payment over 30 days may take place only for good cause and with the agency's prior written approval. Any violation of this provision shall subject the violating prime contractor or subcontractor to the penalties, sanctions and other remedies specified in Section 7108.5 of the Business and Professions Code. These requirements shall not be construed to limit or impair any contractual, administrative, or judicial remedies otherwise available to the prime contractor or subcontractor in the event of a dispute involving late payment or nonpayment by the prime contractor, deficient subcontract performance, or noncompliance by a subcontractor.

Form FWHA-1273 Required Contract Provisions

REQUIRED CONTRACT PROVISIONS

FEDERAL-AID CONSTRUCTION CONTRACTS

I. General

II. Nondiscrimination

III. Nonsegregated Facilities

IV. Davis-Bacon and Related Act Provisions

V. Contract Work Hours and Safety Standards Act Provisions

VI. Subletting or Assigning the Contract

VII. Safety: Accident Prevention

VIII. False Statements Concerning Highway Projects

IX. Implementation of Clean Air Act and Federal Water Pollution Control Act

X. Compliance with Governmentwide Suspension and Debarment Requirements

XI. Certification Regarding Use of Contract Funds for Lobbying

ATTACHMENTS

A. Employment and Materials Preference for Appalachian Development Highway System or Appalachian Local Access Road Contracts (included in Appalachian contracts only)

I. GENERAL

1. Form FHWA-1273 must be physically incorporated in each construction contract funded under Title 23 (excluding emergency contracts solely intended for debris removal). The contractor (or subcontractor) must insert this form in each subcontract and further require its inclusion in all lower tier subcontracts (excluding purchase orders, rental agreements and other agreements for supplies or services).

The applicable requirements of Form FHWA-1273 are incorporated by reference for work done under any purchase order, rental agreement or agreement for other services. The prime contractor shall be responsible for compliance by any subcontractor, lower-tier subcontractor or service provider.

Form FHWA-1273 must be included in all Federal-aid design-build contracts, in all subcontracts and in lower tier subcontracts (excluding subcontracts for design services, purchase orders, rental agreements and other agreements for supplies or services). The design-builder shall be responsible for compliance by any subcontractor, lower-tier subcontractor or service provider.

Contracting agencies may reference Form FHWA-1273 in bid proposal or request for proposal documents, however, the Form FHWA-1273 must be physically incorporated (not referenced) in all contracts, subcontracts and lower-tier subcontracts (excluding purchase orders, rental agreements and other agreements for supplies or services related to a construction contract).

2. Subject to the applicability criteria noted in the following sections, these contract provisions shall apply to all work performed on the contract by the contractor's own organization and with the assistance of workers under the contractor's immediate superintendence and to all work performed on the contract by piecework, station work, or by subcontract.

3. A breach of any of the stipulations contained in these Required Contract Provisions may be sufficient grounds for withholding of progress payments, withholding of final

payment, termination of the contract, suspension / debarment or any other action determined to be appropriate by the contracting agency and FHWA.

4. Selection of Labor: During the performance of this contract, the contractor shall not use convict labor for any purpose within the limits of a construction project on a Federal-aid highway unless it is labor performed by convicts who are on parole, supervised release, or probation. The term Federal-aid highway does not include roadways functionally classified as local roads or rural minor collectors.

II. NONDISCRIMINATION

The provisions of this section related to 23 CFR Part 230 are applicable to all Federal-aid construction contracts and to all related construction subcontracts of $10,000 or more. The provisions of 23 CFR Part 230 are not applicable to material supply, engineering, or architectural service contracts.

In addition, the contractor and all subcontractors must comply with the following policies: Executive Order 11246, 41 CFR 60, 29 CFR 1625-1627, Title 23 USC Section 140, the Rehabilitation Act of 1973, as amended (29 USC 794), Title VI of the Civil Rights Act of 1964, as amended, and related regulations including 49 CFR Parts 21, 26 and 27; and 23 CFR Parts 200, 230, and 633.

The contractor and all subcontractors must comply with: the requirements of the Equal Opportunity Clause in 41 CFR 60-1.4(b) and, for all construction contracts exceeding $10,000, the Standard Federal Equal Employment Opportunity Construction Contract Specifications in 41 CFR 60-4.3.

Note: The U.S. Department of Labor has exclusive authority to determine compliance with Executive Order 11246 and the policies of the Secretary of Labor including 41 CFR 60, and 29 CFR 1625-1627. The contracting agency and the FHWA have the authority and the responsibility to ensure compliance with Title 23 USC Section 140, the Rehabilitation Act of 1973, as amended (29 USC 794), and Title VI of the Civil Rights Act of 1964, as amended, and related regulations including 49 CFR Parts 21, 26 and 27; and 23 CFR Parts 200, 230, and 633.

The following provision is adopted from 23 CFR 230, Appendix A, with appropriate revisions to conform to the U.S. Department of Labor (US DOL) and FHWA requirements.

1. Equal Employment Opportunity: Equal employment opportunity (EEO) requirements not to discriminate and to take affirmative action to assure equal opportunity as set forth under laws, executive orders, rules, regulations (28 CFR 35, 29 CFR 1630, 29 CFR 1625-1627, 41 CFR 60 and 49 CFR 27) and orders of the Secretary of Labor as modified by the provisions prescribed herein, and imposed pursuant to 23 U.S.C. 140 shall constitute the EEO and specific affirmative action standards for the contractor's project activities under this contract. The provisions of the Americans with Disabilities Act of 1990 (42 U.S.C. 12101 et seq.) set forth under 28 CFR 35 and 29 CFR 1630 are incorporated by reference in this contract. In the execution of this contract, the contractor agrees to comply with the following minimum specific requirement activities of EEO:

a. The contractor will work with the contracting agency and the Federal Government to ensure that it has made every good faith effort to provide equal opportunity with respect to all of its terms and conditions of employment and in their review of activities under the contract.

b. The contractor will accept as its operating policy the following statement:

> "It is the policy of this Company to assure that applicants are employed, and that employees are treated during employment, without regard to their race, religion, sex, color, national origin, age or disability. Such action shall include: employment, upgrading, demotion, or transfer; recruitment or recruitment advertising; layoff or termination; rates of pay or other forms of compensation; and selection for training, including apprenticeship, pre-apprenticeship, and/or on-the-job training."

2. EEO Officer: The contractor will designate and make known to the contracting officers an EEO Officer who will

have the responsibility for and must be capable of effectively administering and promoting an active EEO program and who must be assigned adequate authority and responsibility to do so.

3. Dissemination of Policy: All members of the contractor's staff who are authorized to hire, supervise, promote, and discharge employees, or who recommend such action, or who are substantially involved in such action, will be made fully cognizant of, and will implement, the contractor's EEO policy and contractual responsibilities to provide EEO in each grade and classification of employment. To ensure that the above agreement will be met, the following actions will be taken as a minimum:

a. Periodic meetings of supervisory and personnel office employees will be conducted before the start of work and then not less often than once every six months, at which time the contractor's EEO policy and its implementation will be reviewed and explained. The meetings will be conducted by the EEO Officer.

b. All new supervisory or personnel office employees will be given a thorough indoctrination by the EEO Officer, covering all major aspects of the contractor's EEO obligations within thirty days following their reporting for duty with the contractor.

c. All personnel who are engaged in direct recruitment for the project will be instructed by the EEO Officer in the contractor's procedures for locating and hiring minorities and women.

d. Notices and posters setting forth the contractor's EEO policy will be placed in areas readily accessible to employees, applicants for employment and potential employees.

e. The contractor's EEO policy and the procedures to implement such policy will be brought to the attention of employees by means of meetings, employee handbooks, or other appropriate means.

4. Recruitment: When advertising for employees, the contractor will include in all advertisements for employees the notation: "An Equal Opportunity Employer." All such advertisements will be placed in publications having a large circulation among minorities and women in the area from which the project work force would normally be derived.

a. The contractor will, unless precluded by a valid bargaining agreement, conduct systematic and direct recruitment through public and private employee referral sources likely to yield qualified minorities and women. To meet this requirement, the contractor will identify sources of potential minority group employees, and establish with such identified sources procedures whereby minority and women applicants may be referred to the contractor for employment consideration.

b. In the event the contractor has a valid bargaining agreement providing for exclusive hiring hall referrals, the contractor is expected to observe the provisions of that agreement to the extent that the system meets the contractor's compliance with EEO contract provisions. Where implementation of such an agreement has the effect of discriminating against minorities or women, or obligates the contractor to do the same, such implementation violates Federal nondiscrimination provisions.

c. The contractor will encourage its present employees to refer minorities and women as applicants for employment. Information and procedures with regard to referring such applicants will be discussed with employees.

5. Personnel Actions: Wages, working conditions, and employee benefits shall be established and administered, and personnel actions of every type, including hiring, upgrading, promotion, transfer, demotion, layoff, and termination, shall be taken without regard to race, color, religion, sex, national origin, age or disability. The following procedures shall be followed:

a. The contractor will conduct periodic inspections of project sites to insure that working conditions and employee facilities do not indicate discriminatory treatment of project site personnel.

b. The contractor will periodically evaluate the spread of wages paid within each classification to determine any evidence of discriminatory wage practices.

c. The contractor will periodically review selected personnel actions in depth to determine whether there is evidence of discrimination. Where evidence is found, the contractor will promptly take corrective action. If the review indicates that the discrimination may extend beyond the actions reviewed, such corrective action shall include all affected persons.

d. The contractor will promptly investigate all complaints of alleged discrimination made to the contractor in connection with its obligations under this contract, will attempt to resolve such complaints, and will take appropriate corrective action within a reasonable time. If the investigation indicates that the discrimination may affect persons other than the complainant, such corrective action shall include such other persons. Upon completion of each investigation, the contractor will inform every complainant of all of their avenues of appeal.

6. Training and Promotion:

a. The contractor will assist in locating, qualifying, and increasing the skills of minorities and women who are applicants for employment or current employees. Such efforts should be aimed at developing full journey level status employees in the type of trade or job classification involved.

b. Consistent with the contractor's work force requirements and as permissible under Federal and State regulations, the contractor shall make full use of training programs, i.e., apprenticeship, and on-the-job training programs for the geographical area of contract performance. In the event a special provision for training is provided under this contract, this subparagraph will be superseded as indicated in the special provision. The contracting agency may reserve training positions for persons who receive welfare assistance in accordance with 23 U.S.C. 140(a).

c. The contractor will advise employees and applicants for employment of available training programs and entrance requirements for each.

d. The contractor will periodically review the training and promotion potential of employees who are minorities and women and will encourage eligible employees to apply for such training and promotion.

7. Unions: If the contractor relies in whole or in part upon unions as a source of employees, the contractor will use good faith efforts to obtain the cooperation of such unions to increase opportunities for minorities and women. Actions by the contractor, either directly or through a contractor's association acting as agent, will include the procedures set forth below:

a. The contractor will use good faith efforts to develop, in cooperation with the unions, joint training programs aimed toward qualifying more minorities and women for membership in the unions and increasing the skills of minorities and women so that they may qualify for higher paying employment.

b. The contractor will use good faith efforts to incorporate an EEO clause into each union agreement to the end that such union will be contractually bound to refer applicants without regard to their race, color, religion, sex, national origin, age or disability.

c. The contractor is to obtain information as to the referral practices and policies of the labor union except that to the extent such information is within the exclusive possession of the labor union and such labor union refuses to furnish such information to the contractor, the contractor shall so certify to the contracting agency and shall set forth what efforts have been made to obtain such information.

d. In the event the union is unable to provide the contractor with a reasonable flow of referrals within the time limit set forth in the collective bargaining agreement, the contractor will, through independent recruitment efforts, fill the employment vacancies without regard to race, color, religion, sex, national origin, age or disability; making full efforts to obtain qualified and/or qualifiable

minorities and women. The failure of a union to provide sufficient referrals (even though it is obligated to provide exclusive referrals under the terms of a collective bargaining agreement) does not relieve the contractor from the requirements of this paragraph. In the event the union referral practice prevents the contractor from meeting the obligations pursuant to Executive Order 11246, as amended, and these special provisions, such contractor shall immediately notify the contracting agency.

8. Reasonable Accommodation for Applicants / Employees with Disabilities: The contractor must be familiar with the requirements for and comply with the Americans with Disabilities Act and all rules and regulations established there under. Employers must provide reasonable accommodation in all employment activities unless to do so would cause an undue hardship.

9. Selection of Subcontractors, Procurement of Materials and Leasing of Equipment: The contractor shall not discriminate on the grounds of race, color, religion, sex, national origin, age or disability in the selection and retention of subcontractors, including procurement of materials and leases of equipment. The contractor shall take all necessary and reasonable steps to ensure nondiscrimination in the administration of this contract.

a. The contractor shall notify all potential subcontractors and suppliers and lessors of their EEO obligations under this contract.

b. The contractor will use good faith efforts to ensure subcontractor compliance with their EEO obligations.

10. Assurance Required by 49 CFR 26.13(b):

a. The requirements of 49 CFR Part 26 and the State DOT's U.S. DOT-approved DBE program are incorporated by reference.

b. The contractor or subcontractor shall not discriminate on the basis of race, color, national origin, or sex in the performance of this contract. The contractor shall carry out applicable requirements of 49 CFR Part 26 in the award and administration of DOT-assisted contracts. Failure by the contractor to carry out these requirements is a material breach of this contract, which may result in the termination of this contract or such other remedy as the contracting agency deems appropriate.

11. Records and Reports: The contractor shall keep such records as necessary to document compliance with the EEO requirements. Such records shall be retained for a period of three years following the date of the final payment to the contractor for all contract work and shall be available at reasonable times and places for inspection by authorized representatives of the contracting agency and the FHWA.

a. The records kept by the contractor shall document the following:

(1) The number and work hours of minority and non-minority group members and women employed in each work classification on the project;

(2) The progress and efforts being made in cooperation with unions, when applicable, to increase employment opportunities for minorities and women; and

(3) The progress and efforts being made in locating, hiring, training, qualifying, and upgrading minorities and women;

b. The contractors and subcontractors will submit an annual report to the contracting agency each July for the duration of the project, indicating the number of minority, women, and non-minority group employees currently engaged in each work classification required by the contract work. This information is to be reported on Form FHWA-1391. The staffing data should represent the project work force on board in all or any part of the last payroll period preceding the end of July. If on-the-job training is being required by special provision, the contractor will be required to collect and report training data. The employment data should reflect the work force on board during all or any part of the last payroll period preceding the end of July.

III. NONSEGREGATED FACILITIES

This provision is applicable to all Federal-aid construction contracts and to all related construction subcontracts of $10,000 or more.

The contractor must ensure that facilities provided for employees are provided in such a manner that segregation on the basis of race, color, religion, sex, or national origin cannot result. The contractor may neither require such segregated use by written or oral policies nor tolerate such use by employee custom. The contractor's obligation extends further to ensure that its employees are not assigned to perform their services at any location, under the contractor's control, where the facilities are segregated. The term "facilities" includes waiting rooms, work areas, restaurants and other eating areas, time clocks, restrooms, washrooms, locker rooms, and other storage or dressing areas, parking lots, drinking fountains, recreation or entertainment areas, transportation, and housing provided for employees. The contractor shall provide separate or single-user restrooms and necessary dressing or sleeping areas to assure privacy between sexes.

IV. DAVIS-BACON AND RELATED ACT PROVISIONS

This section is applicable to all Federal-aid construction projects exceeding $2,000 and to all related subcontracts and lower-tier subcontracts (regardless of subcontract size). The requirements apply to all projects located within the right-of-way of a roadway that is functionally classified as Federal-aid highway. This excludes roadways functionally classified as local roads or rural minor collectors, which are exempt. Contracting agencies may elect to apply these requirements to other projects.

The following provisions are from the U.S. Department of Labor regulations in 29 CFR 5.5 “Contract provisions and related matters” with minor revisions to conform to the FHWA-1273 format and FHWA program requirements.

1. Minimum wages

a. All laborers and mechanics employed or working upon the site of the work, will be paid unconditionally and not less often than once a week, and without subsequent deduction or rebate on any account (except such payroll deductions as are permitted by regulations issued by the Secretary of Labor under the Copeland Act (29 CFR part 3)), the full amount of wages and bona fide fringe benefits (or cash equivalents thereof) due at time of payment computed at rates not less than those contained in the wage determination of the Secretary of Labor which is attached hereto and made a part hereof, regardless of any contractual relationship which may be alleged to exist between the contractor and such laborers and mechanics.

Contributions made or costs reasonably anticipated for bona fide fringe benefits under section 1(b)(2) of the Davis-Bacon Act on behalf of laborers or mechanics are considered wages paid to such laborers or mechanics, subject to the provisions of paragraph 1.d. of this section; also, regular contributions made or costs incurred for more than a weekly period (but not less often than quarterly) under plans, funds, or programs which cover the particular weekly period, are deemed to be constructively made or incurred during such weekly period. Such laborers and mechanics shall be paid the appropriate wage rate and fringe benefits on the wage determination for the classification of work actually performed, without regard to skill, except as provided in 29 CFR 5.5(a)(4). Laborers or mechanics performing work in more than one classification may be compensated at the rate specified for each classification for the time actually worked therein: Provided, That the employer's payroll records accurately set forth the time spent in each classification in which work is performed. The wage determination (including any additional classification and wage rates conformed under paragraph 1.b. of this section) and the Davis-Bacon poster (WH–1321) shall be posted at all times by the contractor and its subcontractors at the site of the work in a prominent and accessible place where it can be easily seen by the workers.

b. (1) The contracting officer shall require that any class of laborers or mechanics, including helpers, which is not listed in the wage determination and which is to be employed under the contract shall be classified in conformance with the wage determination. The contracting officer shall approve an additional classification and wage rate and fringe benefits therefore only when the following criteria have been met:

(i) The work to be performed by the classification requested is not performed by a classification in the wage determination; and

(ii) The classification is utilized in the area by the construction industry; and

(iii) The proposed wage rate, including any bona fide fringe benefits, bears a reasonable relationship to the wage rates contained in the wage determination.

(2) If the contractor and the laborers and mechanics to be employed in the classification (if known), or their representatives, and the contracting officer agree on the classification and wage rate (including the amount designated for fringe benefits where appropriate), a report of the action taken shall be sent by the contracting officer to the Administrator of the Wage and Hour Division, Employment Standards Administration, U.S. Department of Labor, Washington, DC 20210. The Administrator, or an authorized representative, will approve, modify, or disapprove every additional classification action within 30 days of receipt and so advise the contracting officer or will notify the contracting officer within the 30-day period that additional time is necessary.

(3) In the event the contractor, the laborers or mechanics to be employed in the classification or their representatives, and the contracting officer do not agree on the proposed classification and wage rate (including the amount designated for fringe benefits, where appropriate), the contracting officer shall refer the questions, including the views of all interested parties and the recommendation of the contracting officer, to the Wage and Hour Administrator for determination. The Wage and Hour Administrator, or an authorized representative, will issue a determination within 30 days of receipt and so advise the contracting officer or will notify the contracting officer within the 30-day period that additional time is necessary.

(4) The wage rate (including fringe benefits where appropriate) determined pursuant to paragraphs 1.b.(2) or 1.b.(3) of this section, shall be paid to all workers performing work in the classification under this contract from the first day on which work is performed in the classification.

c. Whenever the minimum wage rate prescribed in the contract for a class of laborers or mechanics includes a fringe benefit which is not expressed as an hourly rate, the contractor shall either pay the benefit as stated in the wage determination or shall pay another bona fide fringe benefit or an hourly cash equivalent thereof.

d. If the contractor does not make payments to a trustee or other third person, the contractor may consider as part of the wages of any laborer or mechanic the amount of any costs reasonably anticipated in providing bona fide fringe benefits under a plan or program, Provided, That the Secretary of Labor has found, upon the written request of the contractor, that the applicable standards of the Davis-Bacon Act have been met. The Secretary of Labor may require the contractor to set aside in a separate account assets for the meeting of obligations under the plan or program.

2. Withholding

The contracting agency shall upon its own action or upon written request of an authorized representative of the Department of Labor, withhold or cause to be withheld from the contractor under this contract, or any other Federal contract with the same prime contractor, or any other federally-assisted contract subject to Davis-Bacon prevailing wage requirements, which is held by the same prime contractor, so much of the accrued payments or advances as may be considered necessary to pay laborers and mechanics, including apprentices, trainees, and helpers, employed by the contractor or any subcontractor the full amount of wages required by the contract. In the event of failure to pay any laborer or mechanic, including any apprentice, trainee, or helper, employed or working on the site of the work, all or part of the wages required by the contract, the contracting agency may, after written notice to the contractor, take such action as may be necessary to cause the suspension of any further payment, advance, or guarantee of funds until such violations have ceased.

3. Payrolls and basic records

a. Payrolls and basic records relating thereto shall be maintained by the contractor during the course of the work and preserved for a period of three years thereafter for all laborers and mechanics working at the site of the work. Such records shall contain the name, address, and social security number of each such worker, his or her correct classification, hourly rates of wages paid (including rates of contributions or costs anticipated for bona fide fringe benefits or cash equivalents thereof of the types described in section 1(b)(2)(B) of the Davis-Bacon Act), daily and weekly number of hours worked, deductions made and actual wages paid. Whenever the Secretary of Labor has found under 29 CFR 5.5(a)(1)(iv) that the wages of any laborer or mechanic include the amount of any costs reasonably anticipated in providing benefits under a plan or program described in section 1(b)(2)(B) of the Davis-Bacon Act, the contractor shall maintain records which show that the commitment to provide such benefits is enforceable, that the plan or program is financially responsible, and that the plan or program has been communicated in writing to the laborers or mechanics affected, and records which show the costs anticipated or the actual cost incurred in providing

such benefits. Contractors employing apprentices or trainees under approved programs shall maintain written evidence of the registration of apprenticeship programs and certification of trainee programs, the registration of the apprentices and trainees, and the ratios and wage rates prescribed in the applicable programs.

b. (1) The contractor shall submit weekly for each week in which any contract work is performed a copy of all payrolls to the contracting agency. The payrolls submitted shall set out accurately and completely all of the information required to be maintained under 29 CFR 5.5(a)(3)(i), except that full social security numbers and home addresses shall not be included on weekly transmittals. Instead the payrolls shall only need to include an individually identifying number for each employee (e.g. , the last four digits of the employee's social security number). The required weekly payroll information may be submitted in any form desired. Optional Form WH–347 is available for this purpose from the Wage and Hour Division Web site at http://www.dol.gov/esa/whd/forms/wh347instr.htm or its successor site. The prime contractor is responsible for the submission of copies of payrolls by all subcontractors. Contractors and subcontractors shall maintain the full social security number and current address of each covered worker, and shall provide them upon request to the contracting agency for transmission to the State DOT, the FHWA or the Wage and Hour Division of the Department of Labor for purposes of an investigation or audit of compliance with prevailing wage requirements. It is not a violation of this section for a prime contractor to require a subcontractor to provide addresses and social security numbers to the prime contractor for its own records, without weekly submission to the contracting agency..

(2) Each payroll submitted shall be accompanied by a "Statement of Compliance," signed by the contractor or subcontractor or his or her agent who pays or supervises the payment of the persons employed under the contract and shall certify the following:

(i) That the payroll for the payroll period contains the information required to be provided under §5.5 (a)(3)(ii) of Regulations, 29 CFR part 5, the appropriate information is being maintained under §5.5 (a)(3)(i) of Regulations, 29 CFR part 5, and that such information is correct and complete;

(ii) That each laborer or mechanic (including each helper, apprentice, and trainee) employed on the contract during the payroll period has been paid the full weekly wages earned, without rebate, either directly or indirectly, and that no deductions have been made either directly or indirectly from the full wages earned, other than permissible deductions as set forth in Regulations, 29 CFR part 3;

(iii) That each laborer or mechanic has been paid not less than the applicable wage rates and fringe benefits or cash equivalents for the classification of work performed, as specified in the applicable wage determination incorporated into the contract.

(3) The weekly submission of a properly executed certification set forth on the reverse side of Optional Form WH–347 shall satisfy the requirement for submission of the "Statement of Compliance" required by paragraph 3.b.(2) of this section.

(4) The falsification of any of the above certifications may subject the contractor or subcontractor to civil or criminal prosecution under section 1001 of title 18 and section 231 of title 31 of the United States Code.

c. The contractor or subcontractor shall make the records required under paragraph 3.a. of this section available for inspection, copying, or transcription by authorized representatives of the contracting agency, the State DOT, the FHWA, or the Department of Labor, and shall permit such representatives to interview employees during working hours on the job. If the contractor or subcontractor fails to submit the required records or to make them available, the FHWA may, after written notice to the contractor, the contracting agency or the State DOT, take such action as may be necessary to cause the suspension of any further payment, advance, or guarantee of funds. Furthermore, failure to submit the required records upon request or to make such records available may be grounds for debarment action pursuant to 29 CFR 5.12.

4. Apprentices and trainees

a. Apprentices (programs of the USDOL).

Apprentices will be permitted to work at less than the predetermined rate for the work they performed when they are employed pursuant to and individually registered in a bona fide apprenticeship program registered with the U.S. Department of Labor, Employment and Training Administration, Office of Apprenticeship Training, Employer and Labor Services, or with a State Apprenticeship Agency recognized by the Office, or if a person is employed in his or her first 90 days of probationary employment as an apprentice in such an apprenticeship program, who is not individually registered in the program, but who has been certified by the Office of Apprenticeship Training, Employer

and Labor Services or a State Apprenticeship Agency (where appropriate) to be eligible for probationary employment as an apprentice.

The allowable ratio of apprentices to journeymen on the job site in any craft classification shall not be greater than the ratio permitted to the contractor as to the entire work force under the registered program. Any worker listed on a payroll at an apprentice wage rate, who is not registered or otherwise employed as stated above, shall be paid not less than the applicable wage rate on the wage determination for the classification of work actually performed. In addition, any apprentice performing work on the job site in excess of the ratio permitted under the registered program shall be paid not less than the applicable wage rate on the wage determination for the work actually performed. Where a contractor is performing construction on a project in a locality other than that in which its program is registered, the ratios and wage rates (expressed in percentages of the journeyman's hourly rate) specified in the contractor's or subcontractor's registered program shall be observed.

Every apprentice must be paid at not less than the rate specified in the registered program for the apprentice's level of progress, expressed as a percentage of the journeymen hourly rate specified in the applicable wage determination. Apprentices shall be paid fringe benefits in accordance with the provisions of the apprenticeship program. If the apprenticeship program does not specify fringe benefits, apprentices must be paid the full amount of fringe benefits listed on the wage determination for the applicable classification. If the Administrator determines that a different practice prevails for the applicable apprentice classification, fringes shall be paid in accordance with that determination.

In the event the Office of Apprenticeship Training, Employer and Labor Services, or a State Apprenticeship Agency recognized by the Office, withdraws approval of an apprenticeship program, the contractor will no longer be permitted to utilize apprentices at less than the applicable predetermined rate for the work performed until an acceptable program is approved.

b. Trainees (programs of the USDOL).

Except as provided in 29 CFR 5.16, trainees will not be permitted to work at less than the predetermined rate for the work performed unless they are employed pursuant to and individually registered in a program which has received prior approval, evidenced by formal certification by the U.S. Department of Labor, Employment and Training Administration.

The ratio of trainees to journeymen on the job site shall not be greater than permitted under the plan approved by the Employment and Training Administration.

Every trainee must be paid at not less than the rate specified in the approved program for the trainee's level of progress, expressed as a percentage of the journeyman hourly rate specified in the applicable wage determination. Trainees shall be paid fringe benefits in accordance with the provisions of the trainee program. If the trainee program does not mention fringe benefits, trainees shall be paid the full amount of fringe benefits listed on the wage determination unless the Administrator of the Wage and Hour Division determines that there is an apprenticeship program associated with the corresponding journeyman wage rate on the wage determination which provides for less than full fringe benefits for apprentices. Any employee listed on the payroll at a trainee rate who is not registered and participating in a training plan approved by the Employment and Training Administration shall be paid not less than the applicable wage rate on the wage determination for the classification of work actually performed. In addition, any trainee performing work on the job site in excess of the ratio permitted under the registered program shall be paid not less than the applicable wage rate on the wage determination for the work actually performed.

In the event the Employment and Training Administration withdraws approval of a training program, the contractor will no longer be permitted to utilize trainees at less than the applicable predetermined rate for the work performed until an acceptable program is approved.

c. Equal employment opportunity. The utilization of apprentices, trainees and journeymen under this part shall be in conformity with the equal employment opportunity requirements of Executive Order 11246, as amended, and 29 CFR part 30.

d. Apprentices and Trainees (programs of the U.S. DOT).

Apprentices and trainees working under apprenticeship and skill training programs which have been certified by the Secretary of Transportation as promoting EEO in connection with Federal-aid highway construction programs are not subject to the requirements of paragraph 4 of this Section IV. The straight time hourly wage rates for apprentices and trainees under such programs will be established by the particular programs. The ratio of apprentices and trainees

to journeymen shall not be greater than permitted by the terms of the particular program.

5. Compliance with Copeland Act requirements. The contractor shall comply with the requirements of 29 CFR part 3, which are incorporated by reference in this contract.

6. Subcontracts. The contractor or subcontractor shall insert Form FHWA-1273 in any subcontracts and also require the subcontractors to include Form FHWA-1273 in any lower tier subcontracts. The prime contractor shall be responsible for the compliance by any subcontractor or lower tier subcontractor with all the contract clauses in 29 CFR 5.5.

7. Contract termination: debarment. A breach of the contract clauses in 29 CFR 5.5 may be grounds for termination of the contract, and for debarment as a contractor and a subcontractor as provided in 29 CFR 5.12.

8. Compliance with Davis-Bacon and Related Act requirements. All rulings and interpretations of the Davis-Bacon and Related Acts contained in 29 CFR parts 1, 3, and 5 are herein incorporated by reference in this contract.

9. Disputes concerning labor standards. Disputes arising out of the labor standards provisions of this contract shall not be subject to the general disputes clause of this contract. Such disputes shall be resolved in accordance with the procedures of the Department of Labor set forth in 29 CFR parts 5, 6, and 7. Disputes within the meaning of this clause include disputes between the contractor (or any of its subcontractors) and the contracting agency, the U.S. Department of Labor, or the employees or their representatives.

10. Certification of eligibility.

a. By entering into this contract, the contractor certifies that neither it (nor he or she) nor any person or firm who has an interest in the contractor's firm is a person or firm ineligible to be awarded Government contracts by virtue of section 3(a) of the Davis-Bacon Act or 29 CFR 5.12(a)(1).

b. No part of this contract shall be subcontracted to any person or firm ineligible for award of a Government contract by virtue of section 3(a) of the Davis-Bacon Act or 29 CFR 5.12(a)(1).

c. The penalty for making false statements is prescribed in the U.S. Criminal Code, 18 U.S.C. 1001.

V. CONTRACT WORK HOURS AND SAFETY STANDARDS ACT

The following clauses apply to any Federal-aid construction contract in an amount in excess of $100,000 and subject to the overtime provisions of the Contract Work Hours and Safety Standards Act. These clauses shall be inserted in addition to the clauses required by 29 CFR 5.5(a) or 29 CFR 4.6. As used in this paragraph, the terms laborers and mechanics include watchmen and guards.

1. Overtime requirements. No contractor or subcontractor contracting for any part of the contract work which may require or involve the employment of laborers or mechanics shall require or permit any such laborer or mechanic in any workweek in which he or she is employed on such work to work in excess of forty hours in such workweek unless such laborer or mechanic receives compensation at a rate not less than one and one-half times the basic rate of pay for all hours worked in excess of forty hours in such workweek.

2. Violation; liability for unpaid wages; liquidated damages. In the event of any violation of the clause set forth in paragraph (1.) of this section, the contractor and any subcontractor responsible therefor shall be liable for the unpaid wages. In addition, such contractor and subcontractor shall be liable to the United States (in the case of work done under contract for the District of Columbia or a territory, to such District or to such territory), for liquidated damages. Such liquidated damages shall be computed with respect to each individual laborer or mechanic, including watchmen and guards, employed in violation of the clause set forth in paragraph (1.) of this section, in the sum of $10 for each calendar day on which such individual was required or permitted to work in excess of the standard workweek of forty hours without payment of the overtime wages required by the clause set forth in paragraph (1.) of this section.

3. Withholding for unpaid wages and liquidated damages. The FHWA or the contacting agency shall upon its own action or upon written request of an authorized representative of the Department of Labor withhold or cause to be withheld, from any moneys payable on account of work performed by the contractor or subcontractor under any such contract or any other Federal contract with the same prime contractor, or any other federally-assisted contract subject to the Contract Work Hours and Safety Standards Act, which is held by the same prime contractor, such sums as may be determined to be necessary to satisfy any liabilities of such contractor or subcontractor for unpaid

wages and liquidated damages as provided in the clause set forth in paragraph (2.) of this section.

4. Subcontracts. The contractor or subcontractor shall insert in any subcontracts the clauses set forth in paragraph (1.) through (4.) of this section and also a clause requiring the subcontractors to include these clauses in any lower tier subcontracts. The prime contractor shall be responsible for compliance by any subcontractor or lower tier subcontractor with the clauses set forth in paragraphs (1.) through (4.) of this section.

VI. SUBLETTING OR ASSIGNING THE CONTRACT

This provision is applicable to all Federal-aid construction contracts on the National Highway System.

1. The contractor shall perform with its own organization contract work amounting to not less than 30 percent (or a greater percentage if specified elsewhere in the contract) of the total original contract price, excluding any specialty items designated by the contracting agency. Specialty items may be performed by subcontract and the amount of any such specialty items performed may be deducted from the total original contract price before computing the amount of work required to be performed by the contractor's own organization (23 CFR 635.116).

a. The term “perform work with its own organization” refers to workers employed or leased by the prime contractor, and equipment owned or rented by the prime contractor, with or without operators. Such term does not include employees or equipment of a subcontractor or lower tier subcontractor, agents of the prime contractor, or any other assignees. The term may include payments for the costs of hiring leased employees from an employee leasing firm meeting all relevant Federal and State regulatory requirements. Leased employees may only be included in this term if the prime contractor meets all of the following conditions:

(1) the prime contractor maintains control over the supervision of the day-to-day activities of the leased employees;

(2) the prime contractor remains responsible for the quality of the work of the leased employees;

(3) the prime contractor retains all power to accept or exclude individual employees from work on the project; and

(4) the prime contractor remains ultimately responsible for the payment of predetermined minimum wages, the submission of payrolls, statements of compliance and all other Federal regulatory requirements.

b. "Specialty Items" shall be construed to be limited to work that requires highly specialized knowledge, abilities, or equipment not ordinarily available in the type of contracting organizations qualified and expected to bid or propose on the contract as a whole and in general are to be limited to minor components of the overall contract.

2. The contract amount upon which the requirements set forth in paragraph (1) of Section VI is computed includes the cost of material and manufactured products which are to be purchased or produced by the contractor under the contract provisions.

3. The contractor shall furnish (a) a competent superintendent or supervisor who is employed by the firm, has full authority to direct performance of the work in accordance with the contract requirements, and is in charge of all construction operations (regardless of who performs the work) and (b) such other of its own organizational resources (supervision, management, and engineering services) as the contracting officer determines is necessary to assure the performance of the contract.

4. No portion of the contract shall be sublet, assigned or otherwise disposed of except with the written consent of the contracting officer, or authorized representative, and such consent when given shall not be construed to relieve the contractor of any responsibility for the fulfillment of the contract. Written consent will be given only after the contracting agency has assured that each subcontract is evidenced in writing and that it contains all pertinent provisions and requirements of the prime contract.

5. The 30% self-performance requirement of paragraph (1) is not applicable to design-build contracts; however, contracting agencies may establish their own self-performance requirements.

VII. SAFETY: ACCIDENT PREVENTION

This provision is applicable to all Federal-aid construction contracts and to all related subcontracts.

1. In the performance of this contract the contractor shall comply with all applicable Federal, State, and local laws governing safety, health, and sanitation (23 CFR 635). The contractor shall provide all safeguards, safety devices and protective equipment and take any other needed actions as it determines, or as the contracting officer may determine, to be reasonably necessary to protect the life and health of employees on the job and the safety of the public and to protect property in connection with the performance of the work covered by the contract.

2. It is a condition of this contract, and shall be made a condition of each subcontract, which the contractor enters into pursuant to this contract, that the contractor and any subcontractor shall not permit any employee, in performance of the contract, to work in surroundings or under conditions which are unsanitary, hazardous or dangerous to his/her health or safety, as determined under construction safety and health standards (29 CFR 1926) promulgated by the Secretary of Labor, in accordance with Section 107 of the Contract Work Hours and Safety Standards Act (40 U.S.C. 3704).

3. Pursuant to 29 CFR 1926.3, it is a condition of this contract that the Secretary of Labor or authorized representative thereof, shall have right of entry to any site of contract performance to inspect or investigate the matter of compliance with the construction safety and health standards and to carry out the duties of the Secretary under Section 107 of the Contract Work Hours and Safety Standards Act (40 U.S.C.3704).

VIII. FALSE STATEMENTS CONCERNING HIGHWAY PROJECTS

This provision is applicable to all Federal-aid construction contracts and to all related subcontracts.

In order to assure high quality and durable construction in conformity with approved plans and specifications and a high degree of reliability on statements and representations made by engineers, contractors, suppliers, and workers on Federal-aid highway projects, it is essential that all persons concerned with the project perform their functions as carefully, thoroughly, and honestly as possible. Willful falsification, distortion, or misrepresentation with respect to any facts related to the project is a violation of Federal law. To prevent any misunderstanding regarding the seriousness of these and similar acts, Form FHWA-1022 shall be posted on each Federal-aid highway project (23 CFR 635) in one or more places where it is readily available to all persons concerned with the project:

18 U.S.C. 1020 reads as follows:

"Whoever, being an officer, agent, or employee of the United States, or of any State or Territory, or whoever, whether a person, association, firm, or corporation, knowingly makes any false statement, false representation, or false report as to the character, quality, quantity, or cost of the material used or to be used, or the quantity or quality of the work performed or to be performed, or the cost thereof in connection with the submission of plans, maps, specifications, contracts, or costs of construction on any highway or related project submitted for approval to the Secretary of Transportation; or

Whoever knowingly makes any false statement, false representation, false report or false claim with respect to the character, quality, quantity, or cost of any work performed or to be performed, or materials furnished or to be furnished, in connection with the construction of any highway or related project approved by the Secretary of Transportation; or

Whoever knowingly makes any false statement or false representation as to material fact in any statement, certificate, or report submitted pursuant to provisions of the Federal-aid Roads Act approved July 1, 1916, (39 Stat. 355), as amended and supplemented;

Shall be fined under this title or imprisoned not more than 5 years or both."

IX. IMPLEMENTATION OF CLEAN AIR ACT AND FEDERAL WATER POLLUTION CONTROL ACT

This provision is applicable to all Federal-aid construction contracts and to all related subcontracts.

By submission of this bid/proposal or the execution of this contract, or subcontract, as appropriate, the bidder, proposer, Federal-aid construction contractor, or subcontractor, as appropriate, will be deemed to have stipulated as follows:

1. That any person who is or will be utilized in the performance of this contract is not prohibited from receiving an award due to a violation of Section 508 of the Clean Water Act or Section 306 of the Clean Air Act.

2. That the contractor agrees to include or cause to be included the requirements of paragraph (1) of this Section X in every subcontract, and further agrees to take such action as the contracting agency may direct as a means of enforcing such requirements.

X. CERTIFICATION REGARDING DEBARMENT, SUSPENSION, INELIGIBILITY AND VOLUNTARY EXCLUSION

This provision is applicable to all Federal-aid construction contracts, design-build contracts, subcontracts, lower-tier subcontracts, purchase orders, lease agreements, consultant contracts or any other covered transaction requiring FHWA approval or that is estimated to cost $25,000 or more – as defined in 2 CFR Parts 180 and 1200.

1**. Instructions for Certification – First Tier Participants:**

a. By signing and submitting this proposal, the prospective first tier participant is providing the certification set out below.

b. The inability of a person to provide the certification set out below will not necessarily result in denial of participation in this covered transaction. The prospective first tier participant shall submit an explanation of why it cannot provide the certification set out below. The certification or explanation will be considered in connection with the department or agency's determination whether to enter into this transaction. However, failure of the prospective first tier participant to furnish a certification or an explanation shall disqualify such a person from participation in this transaction.

c. The certification in this clause is a material representation of fact upon which reliance was placed when the contracting agency determined to enter into this transaction. If it is later determined that the prospective participant knowingly rendered an erroneous certification, in addition to other remedies available to the Federal Government, the contracting agency may terminate this transaction for cause of default.

d. The prospective first tier participant shall provide immediate written notice to the contracting agency to whom this proposal is submitted if any time the prospective first tier participant learns that its certification was erroneous when submitted or has become erroneous by reason of changed circumstances.

e. The terms "covered transaction," "debarred," "suspended," "ineligible," "participant," "person," "principal," and "voluntarily excluded," as used in this clause, are defined in 2 CFR Parts 180 and 1200. “First Tier Covered Transactions” refers to any covered transaction between a grantee or subgrantee of Federal funds and a participant (such as the prime or general contract). “Lower Tier Covered Transactions” refers to any covered transaction under a First Tier Covered Transaction (such as subcontracts). “First Tier Participant” refers to the participant who has entered into a covered transaction with a grantee or subgrantee of Federal funds (such as the prime or general contractor). “Lower Tier Participant” refers any participant who has entered into a covered transaction with a First Tier Participant or other Lower Tier Participants (such as subcontractors and suppliers).

f. The prospective first tier participant agrees by submitting this proposal that, should the proposed covered transaction be entered into, it shall not knowingly enter into any lower tier covered transaction with a person who is debarred, suspended, declared ineligible, or voluntarily excluded from participation in this covered transaction, unless authorized by the department or agency entering into this transaction.

g. The prospective first tier participant further agrees by submitting this proposal that it will include the clause titled "Certification Regarding Debarment, Suspension, Ineligibility and Voluntary Exclusion-Lower Tier Covered Transactions," provided by the department or contracting agency, entering into this covered transaction, without modification, in all lower tier covered transactions and in all solicitations for lower tier covered transactions exceeding the $25,000 threshold.

h. A participant in a covered transaction may rely upon a certification of a prospective participant in a lower tier covered transaction that is not debarred, suspended, ineligible, or voluntarily excluded from the covered transaction, unless it knows that the certification is erroneous. A participant is responsible for ensuring that its principals are not suspended, debarred, or otherwise ineligible to participate in covered transactions. To verify the eligibility of its principals, as well as the eligibility of any lower tier prospective participants, each participant may, but is not required to, check the Excluded Parties List System website (https://www.epls.gov/), which is compiled by the General Services Administration.

i. Nothing contained in the foregoing shall be construed to require the establishment of a system of records in order to render in good faith the certification required by this clause. The knowledge and information of the prospective participant is not required to exceed that which is normally possessed by a prudent person in the ordinary course of business dealings.

j. Except for transactions authorized under paragraph (f) of these instructions, if a participant in a covered transaction knowingly enters into a lower tier covered transaction with a person who is suspended, debarred, ineligible, or voluntarily excluded from participation in this transaction, in addition to other remedies available to the Federal Government, the department or agency may terminate this transaction for cause or default.

* * * * *

2. Certification Regarding Debarment, Suspension, Ineligibility and Voluntary Exclusion – First Tier Participants:

a. The prospective first tier participant certifies to the best of its knowledge and belief, that it and its principals:

(1) Are not presently debarred, suspended, proposed for debarment, declared ineligible, or voluntarily excluded from participating in covered transactions by any Federal department or agency;

(2) Have not within a three-year period preceding this proposal been convicted of or had a civil judgment rendered against them for commission of fraud or a criminal offense in connection with obtaining, attempting to obtain, or performing a public (Federal, State or local) transaction or contract under a public transaction; violation of Federal or State antitrust statutes or commission of embezzlement, theft, forgery, bribery, falsification or destruction of records, making false statements, or receiving stolen property;

(3) Are not presently indicted for or otherwise criminally or civilly charged by a governmental entity (Federal, State or local) with commission of any of the offenses enumerated in paragraph (a)(2) of this certification; and

(4) Have not within a three-year period preceding this application/proposal had one or more public transactions (Federal, State or local) terminated for cause or default.

b. Where the prospective participant is unable to certify to any of the statements in this certification, such prospective participant shall attach an explanation to this proposal.

2. **Instructions for Certification - Lower Tier Participants:**

(Applicable to all subcontracts, purchase orders and other lower tier transactions requiring prior FHWA approval or estimated to cost $25,000 or more - 2 CFR Parts 180 and 1200)

a. By signing and submitting this proposal, the prospective lower tier is providing the certification set out below.

b. The certification in this clause is a material representation of fact upon which reliance was placed when this transaction was entered into. If it is later determined that the prospective lower tier participant knowingly rendered an erroneous certification, in addition to other remedies available to the Federal Government, the department, or agency with which this transaction originated may pursue available remedies, including suspension and/or debarment.

c. The prospective lower tier participant shall provide immediate written notice to the person to which this proposal is submitted if at any time the prospective lower tier participant learns that its certification was erroneous by reason of changed circumstances.

d. The terms "covered transaction," "debarred," "suspended," "ineligible," "participant," "person," "principal," and "voluntarily excluded," as used in this clause, are defined in 2 CFR Parts 180 and 1200. You may contact the person to which this proposal is submitted for assistance in obtaining a copy of those regulations. “First Tier Covered Transactions” refers to any covered transaction between a grantee or subgrantee of Federal funds and a participant (such as the prime or general contract). “Lower Tier Covered Transactions” refers to any covered transaction under a First Tier Covered Transaction (such as subcontracts). “First Tier Participant” refers to the participant who has entered into a covered transaction with a grantee or subgrantee of Federal funds (such as the prime or general contractor). “Lower Tier Participant” refers any participant who has entered into a covered transaction with a First Tier Participant or other Lower Tier Participants (such as subcontractors and suppliers).

e. The prospective lower tier participant agrees by submitting this proposal that, should the proposed covered transaction be entered into, it shall not knowingly enter into any lower tier covered transaction with a person who is debarred, suspended, declared ineligible, or voluntarily excluded from participation in this covered transaction, unless authorized by the department or agency with which this transaction originated.

f. The prospective lower tier participant further agrees by submitting this proposal that it will include this clause titled "Certification Regarding Debarment, Suspension, Ineligibility and Voluntary Exclusion-Lower Tier Covered Transaction," without modification, in all lower tier covered transactions and in all solicitations for lower tier covered transactions exceeding the $25,000 threshold.

g. A participant in a covered transaction may rely upon a certification of a prospective participant in a lower tier covered transaction that is not debarred, suspended, ineligible, or voluntarily excluded from the covered transaction, unless it knows that the certification is erroneous. A participant is responsible for ensuring that its principals are not suspended, debarred, or otherwise ineligible to participate in covered transactions. To verify the eligibility of its principals, as well as the eligibility of any lower tier prospective participants, each participant may, but is not required to, check the Excluded Parties List System website (https://www.epls.gov/), which is compiled by the General Services Administration.

h. Nothing contained in the foregoing shall be construed to require establishment of a system of records in order to render in good faith the certification required by this clause. The knowledge and information of participant is not required to exceed that which is normally possessed by a prudent person in the ordinary course of business dealings.

i. Except for transactions authorized under paragraph e of these instructions, if a participant in a covered transaction knowingly enters into a lower tier covered transaction with a person who is suspended, debarred, ineligible, or voluntarily excluded from participation in this transaction, in addition to other remedies available to the Federal Government, the department or agency with which this transaction originated may pursue available remedies, including suspension and/or debarment.

* * * * *

Certification Regarding Debarment, Suspension, Ineligibility and Voluntary Exclusion--Lower Tier Participants:

1. The prospective lower tier participant certifies, by submission of this proposal, that neither it nor its principals is presently debarred, suspended, proposed for debarment, declared ineligible, or voluntarily excluded from participating in covered transactions by any Federal department or agency.

2. Where the prospective lower tier participant is unable to certify to any of the statements in this certification, such prospective participant shall attach an explanation to this proposal.

* * * * *

XI. CERTIFICATION REGARDING USE OF CONTRACT FUNDS FOR LOBBYING

This provision is applicable to all Federal-aid construction contracts and to all related subcontracts which exceed $100,000 (49 CFR 20).

1. The prospective participant certifies, by signing and submitting this bid or proposal, to the best of his or her knowledge and belief, that:

a. No Federal appropriated funds have been paid or will be paid, by or on behalf of the undersigned, to any person for influencing or attempting to influence an officer or employee of any Federal agency, a Member of Congress, an officer or employee of Congress, or an employee of a Member of Congress in connection with the awarding of any Federal contract, the making of any Federal grant, the making of any Federal loan, the entering into of any cooperative agreement, and the extension, continuation, renewal, amendment, or modification of any Federal contract, grant, loan, or cooperative agreement.

b. If any funds other than Federal appropriated funds have been paid or will be paid to any person for influencing or attempting to influence an officer or employee of any Federal agency, a Member of Congress, an officer or employee of Congress, or an employee of a Member of Congress in connection with this Federal contract, grant, loan, or cooperative agreement, the undersigned shall complete and submit Standard Form-LLL, "Disclosure Form to Report Lobbying," in accordance with its instructions.

2. This certification is a material representation of fact upon which reliance was placed when this transaction was made or entered into. Submission of this certification is a prerequisite for making or entering into this transaction imposed by 31 U.S.C. 1352. Any person who fails to file the required certification shall be subject to a civil penalty of not less than $10,000 and not more than $100,000 for each such failure.

3. The prospective participant also agrees by submitting its bid or proposal that the participant shall require that the language of this certification be included in all lower tier subcontracts, which exceed $100,000 and that all such recipients shall certify and disclose accordingly.

Female and Minority Goals

To comply with comply with Section II, "Nondiscrimination," of "Required Contract Provisions Federal-Aid Construction Contracts," the following are goals for female and minority utilization goals for Federal-aid construction contracts and subcontracts that exceed $10,000:

The City has established the following goal for Disadvantaged Business Enterprise (DBE) participation for this contract: 4.0%

The goal for female utilization is n/a percent.

The goal for minority utilization is n/a percent.

For each July during which work is performed under the contract, you and each non material-supplier subcontractor with a subcontract of $10,000 or more must complete Form FHWA PR-1391 (Appendix C to 23 CFR 230). Submit the forms by August 15.

Title VI Assurances

During the performance of this Agreement, the contractor, for itself, its assignees and successors in interest (hereinafter collectively referred to as CONTRA CTOR) agrees as follows:

1. Compliance with Regulations: CONTRACTOR shall comply with the regulations relative to nondiscrimination in federally assisted programs of the Department of Transportation, Title 49, Code of Federal Regulations, Part 21, as they may be amended from time to time, (hereinafter referred to as the REGULATIONS), which are herein incorporated by reference and made a part of this agreement.

2. Nondiscrimination: CONTRACTOR, with regard to the work performed by it during the AGREEMENT, shall not discriminate on the grounds of race, color, sex, national origin, religion, age, or disability in the selection and retention of sub-applicants, including procurements of materials and leases of equipment. CONTRACTOR shall not participate either directly or indirectly in the discrimination prohibited by Section 21.5 of the Regulations, including employment practices when the agreement covers a program set forth in Appendix B of the Regulations.

3. Solicitations for Sub-agreements, Including Procurements of Materials and Equipment: In all solicitations either by competitive bidding or negotiation made by CONTRACTOR for work to be performed under a Sub-agreement, including procurements of materials or leases of equipment, each potential sub-applicant or supplier shall be notified by CONTRACTOR of the CONTRACTOR'S obligations under this Agreement and the Regulations relative to nondiscrimination on the grounds of race, color, or national origin.

4. Information and Reports: CONTRACTOR shall provide all information and reports required by the Regulations, or directives issued pursuant thereto, and shall permit access to its books, records, accounts, other sources of information, and its facilities as may be determined by the California Department of Transportation or FHWA to be pertinent to ascertain compliance with such Regulations or directives. Where any information required of CONTRACTOR is in the exclusive possession of another who fails or refuses to furnish this information, CONTRACTOR shall so

certify to the California Department of Transportation or the FHWA as appropriate, and shall set forth what efforts CONTRACTOR has made to obtain the information.

5. Sanctions for Noncompliance: In the event of CONTRACTOR's noncompliance with the nondiscrimination provisions of this agreement, the California Department of Transportation shall impose such agreement sanctions as it or the FHWA may determine to be appropriate, including, but not limited to:

    a. withholding of payments to CONTRACTOR under the Agreement within a reasonable period of time, not to exceed 90 days; and/or

    b. cancellation, termination or suspension of the Agreement, in whole or in part.

6. Incorporation of Provisions: CONTRACTOR shall include the provisions of paragraphs (1) through (6) in every sub-agreement, including procurements of materials and leases of equipment, unless exempt by the Regulations, or directives issued pursuant thereto.

CONTRACTOR shall take such action with respect to any sub-agreement or procurement as the California Department of Transportation or FHWA may direct as a means of enforcing such provisions including sanctions for noncompliance, provided, however, that, in the event CONTRACTOR becomes involved in, or is threatened with, litigation with a sub-applicant or supplier as a result of such direction, CONTRACTOR may request the California Department of Transportation enter into such litigation to protect the interests of the State, and, in addition, CONTRACTOR may request the United States to enter into such litigation to protect the interests of the United States.

Use of United States-Flag Vessels

The CONTRACTOR agrees-

1. To utilize privately owned United States-flag commercial vessels to ship at least 50 percent of the gross tonnage (computed separately for dry bulk carries, dry cargo liners, and tankers) involved, whenever shipping any equipment, material, or commodities pursuant to this contract, to the extent such vessels are available at fair and reasonable rates for United States-flag commercial vessels.

2. To Furnish within 20 days following the date of loading for shipments originating within the United State or within 30 working days following the date of loading for shipments originating outside the United States, a legible copy of a rated "on-board" commercial ocean bill-of -lading in English for each shipment of cargo described in paragraph (1) of this section to both the Contracting Officer (through the prime contractor in the case of subcontractor bills-of-lading) and to the Division of National Cargo, Office of Market Development, Maritime Administration, Washington, DC 20590.

3. To insert the substance of the provisions of this clause in all subcontracts issued pursuant to this contract.

Federal Trainee Program

For the Federal training program, the number of trainees or apprentices is 5.

This section applies if a number of trainees or apprentices are specified in the special provisions.

As part of your equal opportunity affirmative action program, provide on-the-job training to develop full journeymen in the types of trades or job classifications involved.

You have primary responsibility for meeting this training requirement.

If you subcontract a contract part, determine how many trainees or apprentices are to be trained by the subcontractor.

Include these training requirements in your subcontract.

Where feasible, 25 percent of apprentices or trainees in each occupation must be in their 1st year of apprenticeship or training.

Distribute the number of apprentices or trainees among the work classifications on the basis of your needs and the availability of journeymen in the various classifications within a reasonable recruitment area.

Before starting work, submit to the City of Victorville:

1. Number of apprentices or trainees to be trained for each classification

2. Training program to be used

3. Training starting date for each classification

Obtain the City of Victorville's approval for this submitted information before you start work. The City of Victorville credits you for each apprentice or trainee you employ on the work who is currently enrolled or becomes enrolled in an approved program.

The primary objective of this section is to train and upgrade minorities and women toward journeymen status. Make every effort to enroll minority and women apprentices or trainees, such as conducting systematic and direct recruitment through public and private sources likely to yield minority and women apprentices or trainees; to the extent they are available within a reasonable recruitment area. Show that you have made the efforts. In making these efforts, do not discriminate against any applicant for training.

Do not employ as an apprentice or trainee an employee:

1. In any classification in which the employee has successfully completed a training course leading to journeyman status or in which the employee has been employed as a journeyman

2. Who is not registered in a program approved by the US Department of Labor, Bureau of Apprenticeship and Training

Ask the employee if the employee has successfully completed a training course leading to journeyman status or has been employed as a journeyman. Your records must show the employee's answers to the questions.

In your training program, establish the minimum length and training type for each classification. The City of Victorville and the FHWA approves a program if one of the following is met:

1. It is calculated to:

    - Meet the your equal employment opportunity responsibilities

    - Qualify the average apprentice or trainee for journeyman status in the classification involved by the end of the training period

2. It is registered with the U.S. Department of Labor, Bureau of Apprenticeship and Training, and it is administered in a way consistent with the equal employment responsibilities of Federal-aid highway construction contracts

Obtain the State's approval for your training program before you start work involving the classification covered by the program.

Provide training in the construction crafts, not in clerk-typist or secretarial-type positions. Training is allowed in lower level management positions such as office engineers, estimators, and timekeepers if the training is oriented toward construction applications. Training is allowed in the laborer classification if significant and meaningful training is provided and approved by the division office. Off-site training is allowed if the training is an integral part of an approved training program and does not make up a significant part of the overall training.

The City reimburses you 80 cents per hour of training given an employee on this contract under an approved training program:

1. For on-site training

2. For off-site training if the apprentice or trainee is currently employed on a Federal-aid project and you do at least one of the following:

    - Contribute to the cost of the training

    - Provide the instruction to the apprentice or trainee

    - Pay the apprentice's or trainee's wages during the off-site training period

3. If you comply this section.

Each apprentice or trainee must:

1. Begin training on the project as soon as feasible after the start of work involving the apprentice's or trainee's skill

2. Remain on the project as long as training opportunities exist in the apprentice's or trainee's work classification or until the apprentice or trainee has completed the training program

Furnish the apprentice or trainee:

1. Copy of the program you will comply with in providing the training Certification showing the type and length of training satisfactorily completed

SECTION G-1 – SPECIAL PROVISIONS-TECHNICAL

BEAR VALLEY ROAD OVERHEAD AT BNSF RAILROAD

PROJECT NO. BHLS-5380 (026)

The Special Provisions for this contract shall be in conformance with the 2015 edition of the State of California, Department of Transportation, Standard Specifications and Revised Standard Specifications and the Standard Specifications for Public Works Construction, 2015 Edition, at Bid Date, except as amended and/or superseded by the following:

TABLE OF CONTENTS

STANDARD PLANS LIST G-1

ORGANIZATION G-4

DIVISION I GENERAL PROVISIONS G-4

1 GENERAL G-4

2 BIDDING G-6

3 CONTRACT AWARD AND EXECUTION G-6

4 SCOPE OF WORK G-7

5 CONTROL OF WORK G-7

7 LEGAL RELATIONS AND RESPONSIBILITY TO THE PUBLIC G-16

8 PROSECUTION AND PROGRESS G-16

9 PAYMENT G-17

DIVISION II GENERAL CONSTRUCTION G-17

10 GENERAL G-17

12 TEMPORARY TRAFFIC CONTROL G-18

13 WATER POLLUTION CONTROL G-19

14 ENVIRONMENTAL STEWARDSHIP G-19

DIVISION III EARTHWORK AND LANDSCAPE G-22

17 GENERAL G-22

19 EARTHWORK G-22

21 EROSION CONTROL G-23

DIVISION IV SUBBASES AND BASES G-25

26 AGGREGATE BASES G-25

DIVISION V SURFACINGS AND PAVEMENTS G-25

39 ASPHALT CONCRETE G-25

DIVISION VI STRUCTURES G-25

46 GROUND ANCHORS AND SOIL NAILS G-25

50 PRESTRESSING CONCRETE G-26

51 CONCRETE STRUCTURES G-26

60 EXISTING STRUCTURES G-27

DIVISION VIII MISCELLANEOUS CONSTRUCTION G-28

73 CONCRETE CURBS AND SIDEWALKS G-28

DIVISION IX TRAFFIC CONTROL DEVICES G-29

83 RAILINGS AND BARRIERS G-29

84 MARKINGS G-31

DIVISION X ELECTRICAL WORK G-32

86 GENERAL G-32

87 ELECTRICAL SYSTEMS G-32

DIVISION XI MATERIALS G-32

90 CONCRETE G-32

APPENDIX A – RAILROAD AGREEMENT

APPENDIX B – ENVIRONMENTAL COMMITMENT RECORD

APPENDIX C – CITY OF VICTORVILLE SECTION C-21 – SPECIAL PROVISIONS FOR TRAFFIC SIGNAL CONTROLLER UNITS, CABINETS AND AUXILIARY EQUIPMENT

APPENDIX D – REVISED STATE STANDARD SPECIFICATIONS

STANDARD PLANS LIST

The standard plan sheets applicable to this Contract include those listed below. The applicable revised standard plans (RSPs) listed below are included in the project plans.

	ABBREVIATIONS, LINES, SYMBOLS, AND LEGEND
A3A	**Abbreviations (Sheet 1 of 3)**
A3B	**Abbreviations (Sheet 2 of 3)**
A3C	**Abbreviations (Sheet 3 of 3)**
A10A	**Legend - Lines and Symbols (Sheet 1 of 5)**
RSP A10B	**Legend - Lines and Symbols (Sheet 2 of 5)**
A10C	**Legend - Lines and Symbols (Sheet 3 of 5)**
A10D	**Legend - Lines and Symbols (Sheet 4 of 5)**
A10E	**Legend - Lines and Symbols (Sheet 5 of 5)**
A10F	**Legend - Soil (Sheet 1 of 2)**
A10G	**Legend - Soil (Sheet 2 of 2)**
A10H	**Legend - Rock**
	PAVEMENT MARKERS, TRAFFIC LINES, AND PAVEMENT MARKINGS
RSP A20A	**Pavement Markers and Traffic Lines - Typical Details**
RSP A20B	**Pavement Markers and Traffic Lines - Typical Details**
RSP A20C	**Pavement Markers and Traffic Lines - Typical Details**
RSP A20D	**Pavement Markers and Traffic Lines - Typical Details**
A24B	**Pavement Markings - Arrows and Symbols**
A24E	**Pavement Markings - Words, Limit and Yield Lines**
A24F	**Pavement Markings - Crosswalks**
	EXCAVATION AND BACKFILL
A62A	**Excavation and Backfill - Miscellaneous Details**
A62C	**Limits of Payment for Excavation and Backfill - Bridge**
A62E	**Excavation and Backfill - Cast-In-Place Reinforced Concrete Box and Arch Culverts**
	OBJECT MARKERS, DELINEATORS, CHANNELIZERS, AND BARRICADES
A73C	**Delineators, Channelizers and Barricades**
	MIDWEST GUARDRAIL SYSTEM - TYPICAL LAYOUTS FOR STRUCTURES
RSP A77Q1	**Midwest Guardrail System - Typical Layouts for Structure Approach**
	MIDWEST GUARDRAIL SYSTEM - CONNECTION DETAILS AND TRANSITION RAILING TO BRIDGE RAILINGS, ABUTMENTS AND WALLS
A77U4	**Midwest Guardrail System - Transition Railing (Type WB-31)**
	CURBS, DRIVEWAYS, DIKES, CURB RAMPS, AND ACCESSIBLE PARKING
RSP A88A	**Curb Ramp Details**
D80	**Cast-In-Place Reinforced Concrete Single Box Culvert**
D82	**Cast-In-Place Reinforced Concrete Box Culvert - Miscellaneous Details**
D84	**Box Culvert Wingwalls - Types A, B and C**
	FLARED END SECTIONS
D94A	**Metal and Plastic Flared End Sections**
	PIPE COUPLING AND JOINT DETAILS
D97J	**Composite Steel Spiral Rib Pipe with Smooth Interior - Standard Joint**
	TEMPORARY CRASH CUSHIONS, RAILING AND TRAFFIC SCREEN
T1A	**Temporary Crash Cushion, Sand Filled (Unidirectional)**

T1B	**Temporary Crash Cushion, Sand Filled (Bidirectional)**
T2	**Temporary Crash Cushion, Sand Filled (Shoulder Installations)**
T3A	**Temporary Railing (Type K)**
T3B	**Temporary Railing (Type K)**
B0-13	**Bridge Details**
B6-21	**Joint Seals (Maximum Movement Rating = 2")**
RSP B9-1	**Structure Approach - Type N (30)**
RSP B9-2	**Structure Approach - Type R (30)**
RSP B9-5	**Structure Approach - Slab Details**
RSP B9-6	**Structure Approach - Drainage Details**
B11-47	**Cable Railing**
RSP B11-58	**Concrete Barrier Type 732SW (Sheet 1 of 2)**
RSP B11-59	**Concrete Barrier Type 732SW (Sheet 2 of 2)**
	ROADSIDE SIGNS
RS1	**Roadside Signs - Typical Installation Details No. 1**
RS2	**Roadside Signs - Wood Post - Typical Installation Details No. 2**
RS4	**Roadside Signs - Typical Installation Details No. 4**
	ELECTRICAL SYSTEMS - LEGEND AND ABBREVIATIONS
RSP ES-1A	**Electrical Systems (Legend)**
RSP ES-1B	**Electrical Systems (Legend)**
RSP ES-1C	**Electrical Systems (Legend and Abbreviations)**
	ELECTRICAL SYSTEMS - SERVICE EQUIPMENT AND WIRING DIAGRAMS
ES-2C	**Electrical Systems (Service Equipment Enclosure Notes, Type III Series)**
RSP ES-2F	**Electrical Systems (Service Equipment Enclosure and Typical Wiring Diagram, Type III - C Series)**
	ELECTRICAL SYSTEMS - SIGNAL HEADS, SIGNAL FACES AND MOUNTINGS
ES-4A	**Electrical Systems (Signal Heads and Mountings)**
ES-4B	**Electrical Systems (Pedestrian Signal Heads)**
RSP ES-4C	**Electrical Systems (Signal Heads and Mountings)**
RSP ES-4D	**Electrical Systems (Signal Head Mounting)**
RSP ES-4E	**Electrical Systems (Signal Heads and Optical Detector Mounting)**
	ELECTRICAL SYSTEMS - DETECTORS
ES-5C	**Electrical Systems (Accessible Pedestrian Signal and Push Button Assemblies)**
ES-5D	**Electrical Systems (Curb and Shoulder Termination, Trench, and Handhole Details)**
	ELECTRICAL SYSTEMS - LIGHTING STANDARDS
RSP ES-6A	**Electrical Systems (Lighting Standard, Types 15 and 21)**
	ELECTRICAL SYSTEMS - SIGNAL AND LIGHTING STANDARD, TYPE TS, AND PUSH BUTTON ASSEMBLY POST
RSP ES-7A	**Electrical Systems (Signal and Lighting Standard, Type TS, and Push Button Assembly Post)**
	ELECTRICAL SYSTEMS - SIGNAL AND LIGHTING STANDARDS
RSP ES-7B	**Electrical Systems (Signal and Lighting Standard, Type 1 and Equipment Identification Characters)**
RSP ES-7F	**Electrical Systems (Signal and Lighting Standard, Case 4 Signal Mast Arm Loading, Wind Velocity = 100 mph and Signal Mast Arm Lengths 25' to 45')**
RSP ES-7G	**Electrical Systems (Signal And Lighting Standard, Case 5 Signal Mast Arm Loading, Wind Velocity = 100 mph and Signal Mast Arm Lengths 50' to 55')**
RSP ES-7H	**Electrical Systems (Signal and Lighting Standard, Case 5 Signal Mast Arm Loading, Wind Velocity = 100 mph and Signal Mast Arm Lengths 60' to 65')**

	ELECTRICAL SYSTEMS - SIGNAL AND LIGHTING STANDARD DETAILS
RSP ES-7M	**Electrical Systems (Signal and Lighting Standard - Detail No. 1)**
RSP ES-7N	**Electrical Systems (Signal and Lighting Standard - Detail No. 2)**
ES-7O	**Electrical Systems (Signal and Lighting Standard - Detail No. 3)**
	ELECTRICAL SYSTEMS - SIGNAL AND LIGHTING, MISCELLANEOUS ATTACHMENT
ES-7R	**Electrical Systems (Signal and Lighting, Miscellaneous Attachment)**
	ELECTRICAL SYSTEMS - PULL BOX
RSP ES-8A	**Electrical Systems (Non-Traffic Pull Box)**
RSP ES-8B	**Electrical Systems (Traffic Pull Box)**
	ELECTRICAL SYSTEMS - STRUCTURE INSTALLATIONS
ES-9B	**Electrical Systems (Conduit Riser and Expansion Fitting, Structure Installations)**
RSP ES-9C	**Electrical Systems (Structure Pull Box)**
RSP ES-9E	**Electrical Systems (Flush-Mounted Soffit, Pendant soffit and Wall-Mounted Luminaire, Structure Installations)**
	ELECTRICAL SYSTEMS - ISOFOOTCANDLE CURVES AND FOUNDATION DETAILS
RSP ES-10A	**Electrical Systems (Isofootcandle Curves)**
RSP ES-11	**Electrical Systems (Foundation Installations)**
	ELECTRICAL SYSTEMS - SPLICE INSULATION METHODS, FUSE RATING, KINKING AND BANDING DETAILS
RSP ES-13A	**Electrical Systems (Splice Insulation Methods Details)**
RSP ES-13B	**Electrical Systems (Fuse Rating, Kinking, and Banding Detail)**

ORGANIZATION

Special provisions are under headings that correspond with the main-section headings of the *Standard Specifications*. A main-section heading is a heading shown in the table of contents of the *Standard Specifications*.

Each special provision begins with a revision clause that describes or introduces a revision to the *Standard Specifications* as revised by any revised standard specification.

Any paragraph added or deleted by a revision clause does not change the paragraph numbering of the *Standard Specifications* for any other reference to a paragraph of the *Standard Specifications*.

^^

DIVISION I GENERAL PROVISIONS

1 GENERAL

Add to section 1-1.01:

Bid Items and Applicable Sections

Item code	Item description	Applicable section
129111	TEMPORARY CRASH CUSHION (TYPE ABSORB 350)	12
390133	ASPHALT CONCRETE (TYPE C)	39
568041	RELOCATE PEDESTRIAN BARRICADE	56
730030	MINOR CONCRETE (STANDARD CURB)	73
730035	MINOR CONCRETE (CROSS GUTTER)	73
731503	MINOR CONCRETE (MISCELLANEOUS CONSTRUCTION) (HANDRAIL CURB)	73
770030	SIGNAL AND LIGHTING (CITY STREET LOCATION 1)	87
770050	SIGNAL AND LIGHTING (CITY STREET LOCATION 2)	87
810235	PAVEMENT MARKER (NON-REFLECTIVE)	81
839788	REMOVE HANDRAILING	83
846021	REMOVE TRAFFIC STRIPE	84
846026	REMOVE PAVEMENT MARKING	84

Add to section 1-1.07B or Replace if defined in section 1-1.07B with:

Architect: The Engineer, as defined herein.

Bid Item List: List of bid items, units of measure, and the associated quantities. The Bid Item List is included in the Bid Forms.

City: City of Victorville

Department of Transportation: The City of Victorville Engineering Department

Department: The City of Victorville Engineering Department

Director: The City of Victorville Public Works Director or designee

Engineer: The City Engineer, City of Victorville, acting either directly or through properly authorized agents, the agents acting within the scope of the duties delegated to them.

Highway: Highway or Highway Right of Way is the work site(s) as identified in the contract or the area of work within the City right of way for privately funded projects.

Laboratory: The City or a designated laboratory authorized by the City to test materials and work involved in the contract.

Landscape Architect: The Engineer as defined herein.

MUTCD: The most current version of the California Manual on Uniform Traffic Control Devices.

Office of Structure Design: The Office of the City Engineer at the address located in the special provisions for the submission of bids.

plans: Standard plans, revised standard plans, and project plans.

1. **standard plans:** Drawing standard to Caltrans.
2. **revised standard plans:** New or revised standard plans.
3. **project plans:** Drawings specific to the project, including authorized shop drawings.
4. **engineering standards:** Drawing standard to City of Victorville

specifications: Standard specifications, revised standard specifications, and special provisions.

1. **standard specifications:** Specifications standard to State construction projects. These specifications are in a book titled *Standard Specifications*.
2. **State Standard Specification:** Specifications standard to State construction projects. These specifications are in a book titled *Standard Specifications*.
3. **revised standard specifications:** New or revised standard specifications. These specifications are in a section titled *Revised Standard Specifications* of a book titled *Notice to Bidders and Special Provisions*.
4. **special provisions:** Specifications specific to the project. These specifications are in a section titled *Special Provisions* of a book titled *Notice to Bidders and Special Provisions*.
5.. **City of Victorville Standard Specifications or City Standards:** The directions, provisions and requirements contained in the City of Victorville Standard Specifications for Public Improvements.

State: The City of Victorville Engineering Department

State of California: The City of Victorville Engineering Department

Delete section 1-1.08.

Add to section 1-1.11:

Reference	Web Site	Address	Telephone Number
City of Victorville	https://www.victorvilleca.gov "Bids" Click on the link to an outside website (www.ebidboard.com)	14343 Civic Drive, Victorville, CA	(760) 955-5000

Replace 1st paragraph of section 1-1.12 with:

Make checks and bonds payable to the City of Victorville.

^^

2 BIDDING

Replace section 2-1.06A with:

Obtain bid packages including bid forms, certifications, plans, special provisions and addenda at Engineering Division, City of Victorville, 14343 Civic Drive, Victorville, CA.

State Standard Specifications, Standard Plans and Revised Standard Plans are available for review at http://dot.ca.gov/hq/esc/oe/construction_standards.html. City Engineering Standards and Standard Specifications are available at Engineering Division, City of Victorville.

Add between the 1st and 2nd paragraphs of section 2-1.06B:

The Department makes the following supplemental project information available:

Supplemental Project Information

Means	Description
Included with the project plans	Log of Test Borings
Available for inspection at: Engineering Division, City of Victorville, 14343 Civic Drive, Victorville, CA	1. Asbestos and Deteriorated Lead-Containing Paint Survey Report 2. Foundation Report 3. Materials Report 4. Geotechnical Design Report 5. Aerially Deposited Lead Investigation Results

Replace section 2-1.33A with:

Furnish bid using blank forms provided in the bid package. Bid must include all forms and must be signed by the bidder and each page must be initialed.

^^

3 CONTRACT AWARD AND EXECUTION

Replace section 3-1.04 with:

If the City awards the contract, the award will be made to the lowest responsive bid submitted by a responsible bidder within 60 calendar days.

Delete section 3-1.08.

Replace section 3-1.18 with:

The successful bidder must sign the contract and deliver to the Engineer:

1. signed contract
2. contract bonds
3. insurance policies

4. for federal-aid contract, DBE Information Form

The Engineer must receive these documents before the 10th business day after the bidder receives the contract.

The bidder's security may be forfeited for failure to execute the contract and provide the Engineer with all documents within the time specified

^^

4 SCOPE OF WORK

Add to section 4-1.05A:

In instances where you and the City dispute that certain work is:

5. extra work or
6. a change in the character of the work

You are responsible to obtain, from the Engineer, for the disputed work daily agreement on:

7. labor
8. materials
9. equipment

The agreements must be signed by both parties daily. Maintain and submit these records in compliance with:

10. section 5-1.27E
11. section 5-1.43

Daily agreement by the Engineer for disputed work items does not constitute agreement to pay for disputed work.

^^

5 CONTROL OF WORK

Replace section 5-1.02 with:

A component in one contract part applies as if appearing in each. The parts are complementary and describe and provide for complete work. The special provisions work in conjunction with:

1. project plans
2. engineering standards
3. standard plans
4. manufacturer's recommendations

Where materials and methods are specified, details in plans and standards are to be consulted to provide full information needed to complete installations.

If a discrepancy exists:

1. The governing ranking of contract parts in descending order is:
   - 1.1 project special provisions
   - 1.2 project plans
   - 1.3 State revised standard specifications
   - 1.4 State standard specifications
   - 1.5 State revised standard plans
   - 1.6 State standard plans
   - 1.7 City Engineering Standards
   - 1.8 City Standard Specifications
   - 1.9 Supplemental Project Information

2. Written numbers and notes on a drawing govern over graphics
3. A detail drawing governs over a general drawing
4. A detail specification governs over a general specification
5. A specification in a section governs over a specification referenced by that section

If a discrepancy is found or confusion arises, submit an RFI.

Where manufacturer's recommendations for installation are more stringent than those prescribed in the standard specifications or the special provisions, the manufacturer's recommendations will take precedence. This condition may be waived at the discretion of the Engineer.

Replace *Reserved* in section 5-1.04 with:

5-1.04 RESIDENT ENGINEER'S OFFICE

Furnish and maintain a Resident Engineer's Office (Field Office) separate from the field office, suitable for the intended purpose, for the exclusive use of City Staff and the Engineer and his staff, at a location approved by the City and in accordance with the following provisions.

The Field Office must be maintained in a clean, neat and sanitary manner at all times at a minimum of once a week. Supply all sanitary paper products required for the restroom. Resident Engineer's office must be equipped with flushing toilets and running water.

The Field Office must be a 1400 square feet (minimum) office facility with required utility hook up including electricity, potable water, 2 telephone lines, multi-line speaker phones, secure Wi-Fi, and air conditioning. The facility will have 1 restroom and partitions creating 3 interior rooms. Pay monthly rental fees and obtain all rights of entry necessary.

You are fully responsible to provide all utility hook-ups for the Resident Engineer's Office, including electrical power, telephone, potable water and sewage disposal. Obtain all necessary permits and pay all fees.

Provide the Field Office with a facsimile machine with a separate phone line and a color copying machine capable of photocopying 11" x 17" size paper for the exclusive use of the Engineer and his staff for the entire duration of the project.

Be aware that theft and vandalism at the job site may be a problem. You are responsible for the security of the Field Office.

If for any reason, the phone, copier, facsimile machine, internet service, any office furniture, and/or sanitary facility is vandalized, stolen, or in need of repair, upon receipt of written notice by Engineer, replace or repair or the items to full working order within a maximum of five (5) working days. If you fail to comply with the five (5) working days specified, the City may at its option withhold monthly progress payments until Field Office is returned to full and complete working order.

Meet with the Engineer prior to construction (and at any other time circumstances warrant), and together, mutually agree on a location for the field office. Obtain approval of the proposed Field Office by the Engineer prior to implementation.

The following must be furnished and supplied for the duration of the contract:

1. Furnish, service and maintain office.
2. The following office furniture, in new or near new condition, must be furnished, at a minimum:
   3 ea. 30" x 60" desks with lockable drawers
   3 ea. task swivel chairs
   1 ea. conference table to accommodate 10 conference chairs.
   10 conference chairs
   1 ea. 60"H x 40"W x 16"D book shelf
   1 ea. 60" x 36" drafting table and chair
3. Supply utilities for office, including electricity, phone (2 lines), potable water, and DSL internet service or approved equal for the duration of the contract, including fees.
4. Supply, service and maintain sanitary facility.
5. Facsimile machine (separate phone line).
6. Furnish two current model personal computers for the duration of the contract, suitable and capable for office use, internet connected utilizing DSL service or approved equal and complete with necessary software including Microsoft Office, latest version.
7. Two color laser printers, HP Color Laserjet model 2605DN (also known as Q7822A) or approved alternate. One color flatbed scanner, HP Scanjet 5590 or approved alternate. All supplies and necessary maintenance for the use of the above equipment by the Engineer must be furnished and supplied for the duration of the contract.
8. Color Copying machine (11” x 17”).
9. Installation of 4 designated public parking spaces.
10. Installation of appropriate number of designated parking spaces for the construction manager, inspectors, general Contractors, workers, material supplies, subcontractors and other support personnel.
11. Installation of 1 large sized unit commercial trash bin with cover and regularly scheduled pick up.
12. Field office must have a 24” x 36” sign, white color, affixed near the door. The sign text must read “CITY OF VICTORVILLE”.
13. Remove office from job site at the completion of the project.
14. Security.
15. If office is located on private property, all property rental costs and right of entry.
16. Furnish a 20 cubic foot refrigerator.
17. Furnish a water cooler dispenser and bottled water for use with the cooler.
18. Furnish 16-20 oz. bottled water supply for the duration of the project.

No monthly progress payments will be due until all provisions and requirements of “Resident Engineer’s Office” are complete and in place.

Delete section 5-1.13C.

Delete section 5-1.13D.

Replace section 5-1.20C with:

1-1.20C Railroad Relations

This project includes work on Burlington Northern Santa Fe Railway Company (BNSF) property.

Comply with all the requirements set forth in the “Overpass Agreement” between the City of Victorville and BNSF dated September 8, 2017. The City makes the provisions of the Overpass Agreement available in the Information Handout in the document titled "Railroad Relations and Insurance Requirements.” A copy of the Overpass Agreement is provided in the Appendix. Examine the agreement and comply with the recommendations and requirements of the “Overpass Agreement”. If there is any difference between the information listed below and the BNSF “Overpass Agreement”, the language in the “Overpass Agreement” will govern.

Comply with Sections 5-1.36, 48-2 and 50-1. Where conflict between the “Overpass Agreement” document and the specifications exist, the document will control.

The term "Railroad" is to be understood to mean the Burlington Northern Santa Fe Railway (BNSF), unless otherwise noted or designated in the BNSF “Overpass Agreement”.

It is expected that the Railroad will cooperate with the you to the end that the work may be handled in an efficient manner. However, except as provided in Public Contracts Code Section 7102, you willl have no claim for damages, extension of time, or extra compensation in the event his work is held up by any of the work to be performed by the Railroad.

You must understand your right to enter the Railroad’s property is subject to the absolute right of Railroad to cause your work on Railroad's property to cease if, in the opinion of Railroad, your activities create a hazard to Railroad's property, employees, and/or operations.

You will be required to sign and submit to the Railroad the Contractor’s Endorsement, in the form provided by the Railroad (Exhibit C-1 of the Overpass Agreement).

Cooperate with the Railroad where work is over the tracks, or within the limits of Railroad property, in order to expedite the work and to avoid interference with the operation of railroad equipment.

Comply with the rules and regulations of Railroad or the instructions of its representatives in relation to the proper manner of protecting the tracks and property of Railroad and the traffic moving on such tracks, as well as the wires, signals and other property of Railroad, its tenants or licensees, at and in the vicinity of the work during the period of construction.

Perform work in such manner, and at such times, as not endanger or interfere with the safe operation of the tracks and property of Railroad and traffic moving on such tracks, as well as wires, signals and other property of Railroad, its tenants or licensees, at or in the vicinity of the work.

Take protective measures necessary to keep railroad facilities, including track ballast, free of sand or debris resulting from his operations. Any damage to railroad facilities resulting from your operations will be repaired or replaced by Railroad and the cost of such repairs or replacement will be deducted from your progress and final pay estimates.

Contact the Railroad’s “Call Before You Dig” hotline at least 48 hours prior to commencing work to determine location of existing utilities.

Do not pile or store any materials nor park any equipment closer than 25’- 0” to the centerline of the nearest track, unless directed by Railroad’s representative.

Abide by the minimum temporary clearances during the course of construction, as provided in Exhibit C, paragraph 1.03.03, except as follows:

- 22’-0” vertically above top of rail

Any infringement on the above temporary construction clearances due to your operations must be submitted to the Railroad by way of the Engineer and must not be undertaken until approved by the Railroad, and until the Engineer has obtained any necessary authorization from any governmental body or bodies having jurisdiction there over. No extension of time or extra compensation will be allowed in the event your work is delayed pending Railroad approval and governmental authorization.

If you, for the purpose of constructing the overhead grade separation structure, including construction ramps thereto, desires to move equipment or materials across Railroad’s tracks, you must first obtain permission from Railroad. It is anticipated that the Railroad will allow one crossing of at least one of the tracks within the designated temporary construction easement. You will be required to execute a “Temporary Construction Crossing Agreement” from the Railroad for this temporary private crossing. Allow the railway 120 calendar days for review of a temporary crossing agreement. By this agreement, you would be required to bear the cost of the crossing surface, together with any warning devices that might be required. Furnish your own employees as flagmen to control movements of vehicles on the private roadway and take all measures necessary to prevent the use of such roadway by unauthorized persons and vehicles. Private crossings at grade over tracks of Railroad for the purpose of hauling earth, rock, paving or other materials will not be permitted.

Do not erect and remove temporary falsework over the tracks while trains are present or when otherwise restricted by Railroad operations.

NOTE - The Railroad will not stop or alter train movements to accommodate construction of the overhead grade separation.

Railroad provided flagging that is required as specified in the Overpass Agreement will be paid for by you.

No work requiring Railroad flagging shall occur between October 1st and December 31st of any year.

Promptly remove from the premises of Railroad all tools, implements and other materials, whether brought upon said premises by you or any subcontractor, employee or agent of yours or of any subcontractor, upon completion of the work covered by this contract., and cause said premises to be left in a clean and presentable condition.

Replace section 5-1.24 with:

5-1.24 CONSTRUCTION SURVEYS

5-1.24A General

The Department places stakes and marks under Chapter 12, "Construction Surveys," of the Department's *Surveys Manual*.

Submit your request for Department-furnished stakes:

1. Once the staking area is ready for stakes
2. On a Request for Construction Staking form

After your submittal, the Department starts staking within 2 business days.

Preserve stakes and marks placed by the Department. If the stakes or marks are destroyed, the Department replaces them at the Department's earliest convenience and deducts the cost.

5-1.24B Department Construction Surveys for Automated Machine Guidance

The Department sets control points to a minimum of 0.07 foot local horizontal accuracy and third order vertical accuracy standards.

For slope stakes and rough grade stakes, the Department sets 6 survey control points or 2 control points per mile, whichever is greater.

The Department sets slope stakes and rough grade stakes at:

1. Conform stations
2. Beginning and end of each alignment
3. Midpoint or every 200 feet, whichever is greater, on a curve
4. Every 500 feet on tangents

For final grade stakes, the Department sets survey control points under Chapter 12, "Construction Surveys," section 12.1-6, "Automated Machine Guidance (AMG)," and figure 12-2 of the Department's *Surveys Manual*. The Department sets final grade stakes at:

1. Conform stations
2. Beginning and end of each alignment
3. Midpoint or every 100 feet, whichever is greater, on a curve with a radius of 1,200 feet or less
4. Midpoint or every 200 feet, whichever is greater, on a curve with a radius of more than 1,200 feet
5. Every 200 feet on a tangent

Upon your request and under Chapter 12, "Construction Surveys," of the Department's *Surveys Manual*, the Department provides (1) staking for intersections, clearing, fencing, drainage, curbs, structures, abutment fill, wall, and miscellaneous areas and (2) additional survey control or staking for earthwork in areas where global navigation satellite system (GNSS) coverage is inadequate for automated machine guidance.

Replace section 5-1.25 with:

5-1.25 AUTOMATED MACHINE GUIDANCE

5-1.25A General

You may use automated machine guidance (AMG) if the AMG meets or exceeds the staking tolerances described in section 12.5, "Typical Department-Furnished Construction Stakes," of the Department's *Surveys Manual*.

You are responsible for determining whether the work and site conditions are practical for AMG use.

Furnish a GNSS rover compatible with your GNSS base station or the GNSS correction service you subscribe to. The Department returns the GNSS rover upon work completion. This is change order work.

At the preconstruction conference, be prepared to discuss survey control points, site and equipment calibration, inspection methods, conflict resolution, and staking.

5-1.25B Definitions

automated machine guidance (AMG): Technology that uses positioning devices, singly or in combination, such as global navigation satellite systems (GNSS), total stations, or rotating laser levels, to determine and control the real-time position of construction equipment using onboard computer equipment.

California Coordinate System of 1983 (CCS83): CCS83 as defined in Pub Res Code § 8801.

digital construction model (DCM): Three-dimensional model used by the Contractor's AMG equipment.

digital design model: Three-dimensional model consisting of roadway design alignments, profiles, and cross sections representing the finished grade.

digital terrain model: Three-dimensional model representing the original ground before job site activities start.

global navigation satellite system (GNSS): Satellite system used to pinpoint the geographic location of a user's receiver anywhere in the world. Two GNSS systems are in operation: the US GPS and the Russian Federation's GLONASS. Each of the GNSS systems uses a constellation of orbiting satellites working in conjunction with a network of ground stations.

GNSS base station: Single ground-based system consisting of a GNSS receiver, antenna, and telemetry equipment that provides differential GNSS correction signals to other GNSS receivers or rovers. Multiple base stations can be combined into a GNSS network.

GNSS correction service subscription: Subscription service to receive differential GNSS correction signals for higher accuracy GNSS positioning without the need of a GNSS base station. Signals are normally received via cellular wireless data services.

GNSS rover: Portable GNSS antenna, receiver, rod, and data collector with telemetry equipment for real-time point measurements.

grid: Cartesian coordinate system of Northing (y) and Easting (x) coordinates using CCS83.

robotic total station: Survey instrument capable of tracking an optical target and providing real-time coordinates of the target to the equipment operator and AMG equipment. A robotic total station unit can provide AMG if site conditions do not allow GNSS receivers to be used and if a higher accuracy is required than the GNSS provides.

site calibration or localization: Process that establishes the relationship between the observed control point coordinates and the site coordinate system, which is usually grid. The term applies to both GNSS and robotic total station equipment.

5-1.25C Electronic Files

Electronic design files include:

1. Digital terrain model in 3-D DGN or LandXML format

2. Roadway design alignments and profiles in LandXML format
3. Cross sections in 2-D DGN and PDF
4. Digital design model in LandXML format

The Department makes electronic design files available as supplemental project information.

You must create the digital construction models.

Convert the electronic design files to a format compatible with your AMG system. Manipulation of the electronic design files is at your own risk.

Submit copies of the digital construction model files and any updates to them in LandXML format.

Digital design model information may not exist for contour grading and some drainage areas. The Department places stakes for these areas.

The Department provides you with updated electronic data whenever the Engineer determines a plan change materially affects the finished grade. For minor grade changes, the Department places stakes and marks.

5-1.25D Quality Control Plan

Submit an AMG QC plan at least 15 days before starting work requiring AMG. The plan must include the following information:

1. Contract number
2. Name and contact information of the AMG QC technician
3. Limits of the area for which the AMG will be used
4. Scope of work to be completed using AMG for the following work categories:
    - 4.1. Clearing and grubbing
    - 4.2. Earthwork
    - 4.3. Trench excavation
    - 4.4. Rough grading
    - 4.5. Subgrade
    - 4.6. Subbase
    - 4.7 Base
    - 4.8. Curb and gutter
    - 4.9. Cold planning or milling existing pavement
    - 4.10. Paving
    - 4.11. Intelligent compaction
    - 4.12. Concrete barrier
    - 4.13. Finishing roadway
5. Project control plan sheet detailing control points covering the job site
6 List of GNSS equipment, including:
    - 6.1. Type
    - 6.2. Manufacturer
    - 6.3. Model
    - 6.4. Software version
7. Description of GNSS site calibration or localization checking, including:
    - 7.1. List of equipment requiring calibration or localization checking
    - 7.2. Site calibration or localization procedures
    - 7.3. Frequency of calibration or localization
    - 7.4. Format for recording calibrations or localizations, including:
        - 7.4.1. Date
        - 7.4.2. Locations where calibration or localization was performed
        - 7.4.3. GNSS equipment manufacturer and model
        - 7.4.4. Range of required tolerance
        - 7.4.5. Name and signature of the person performing calibration or localization
    - 7.5. Reporting time for submitting records of calibration or localization
8. Description of daily GNSS equipment or robotic total station equipment check-testing procedures, including the format for recording daily check testing

9. List of AMG onboard computer equipment, including:
    9.1. Type
    9.2. Manufacturer
    9.3. Software version
    9.4. List of AMG-controlled equipment, including:
        9.4.1. Type, such as loader or grader
        9.4.2. Manufacturer
        9.4.3 Model
10. Procedures for AMG-controlled equipment calibration, including:
    10.1. Description of equipment calibration procedures
    10.2. Frequency of calibration
    10.3. Format for recording calibration information
11. Electronic data file control, including:
    11.1. Name and contact information of the person responsible for the electronic files
    11.2. DCM file-naming convention
    11.3. Description of the process that will be used to upload the DCM to the AMG equipment
    11.4. Description of the process that will be used whenever updated DCM files are required to be uploaded to the AMG equipment

If QC procedures or personnel change, submit a QC plan supplement describing the change.

5-1.25E Quality Control Technician

During AMG activities, provide a QC technician to be responsible for:

1. GNSS site calibration or localization and upload to all GNSS receivers
2. Maintenance of GNSS and AMG equipment
3. Documentation of the calibration or localization and maintenance of GNSS equipment
4. Daily calibration and documentation of AMG equipment
5. Daily setup and takedown of GNSS and robotic total station components

5-1.25F Just-in-Time Training

Provide at least 8 hours of JIT training on the GNSS rover for up to 3 Department employees. Provide training materials and equipment.

The JIT training must cover the following topics:

1. Background information for the GNSS to be used
2. Setup and calibration checks for:
    2.1. GNSS receiver
    2.2. GNSS base station
    2.3. GNSS rovers
    2.4. Machinery
3. Operation of the GNSS rover, including:
    3.1. Setup data collection
    3.2. Settings for alignments and profiles
    3.3. Onboard display options
4. Demonstration of grade checking using the rover

The training is change order work.

5-1.25G Construction

5-1.25G(1) General

If you find a discrepancy in any survey control point, survey stake, or in the electronic data provided, immediately, submit an RFI.

5-1.25G(2) GNSS Site Calibration or Localization

Perform GNSS site calibration or localization to the survey control points at least 5 business days before starting work requiring AMG.

Check each survey control point for accuracy. Submit the GNSS site calibration or localization results within 1 business day of the calibration or localization testing. Allow 3 business days for the review of the results

5-1.25G(3) GNSS Check Testing

Before starting daily work requiring AMG, conduct check testing for the proper setup of the GNSS or robotic total station equipment. Ensure the GNSS or robotic total station equipment achieves accuracies within:

1. 0.10 foot in both horizontal and vertical directions for rough grading
2. 0.05 foot in horizontal directions and 0.02 foot in vertical directions for final grades

Before starting daily production, conduct check testing of the AMG equipment and the GNSS rovers.

Within 1 business day after check testing, submit the check-testing results as informational submittals.

5-1.25G(4) Grade Verification

If requested, provide a GNSS rover and personnel to operate it for the Engineer's use in verifying grades. This is change order work.

Replace section 5-1.26 with:

5-1.26 GRADE QUALITY CONTROL

Use a GNSS rover, robotic total station equipment, or a level to check the grades at the frequencies shown in the following table:

Grade Checking Requirements

Type of work	Area or distance represented by the grade checking	Frequency (number of grade points)
Earthwork for cut and fill slopes ≤15 feet	200 feet	2
Earthwork for cut and fill slopes >15 feet	1,000 sq yd	1
Rough grading	1,000 sq yd	1
Trenching	100 feet	6
Subgrade	1 mi	30
Subbase layer	1 mi	50
Base layer	1 mi	100
Curb and gutter	100 feet	6
Concrete barrier	100 feet	5
Finishing roadway	1,000 sq yd	2

Increase the frequency of grade checking of a roadway:

1. Wherever its curve radius is 500 feet or less
2. In areas of a superelevation transition
3. At intersections

Notify the Engineer when an area is ready for line and grade inspection. Submit the grade checking results on a Grade Checking Report form as an informational submittal.

Replace section 5-1.27E with:

You must deliver all Change Order Bills and support documents in writing to the Engineer. A Change Order Bill will not be accepted by the Engineer unless prior approval for the work has been given. A change order is approved when both you and the Engineer have approved it in writing.

Add between the 2nd and 3rd paragraphs of the RSS for section 5-1.36C(3):

Installation of the utilities shown in the following table requires coordination with your activities. Make the necessary arrangements with the utility company through the Engineer and submit a schedule:

1. Verified by a representative of the utility company
2. Allowing at least the time shown for the utility owner to complete its work

Utility Relocation and Contractor-Arranged Time for the Relocation

Utility	Utility address	Location	Working days
Charter Communications	12858 Production Place, Suite 1 Victorville, CA 92395	Bear Valley Road	5

^^

7 LEGAL RELATIONS AND RESPONSIBILITY TO THE PUBLIC

Replace *Reserved* in section 7-1.02K(6)(j)(iii) with:

Section 7-1.02K(6)(j)(iii) includes specifications for handling, removing, and disposing of earth material containing lead.

Lead is present in earth material on the job site. Management of this material exposes workers to health hazards that must be addressed in your lead compliance plan. The average lead concentrations are below 1,000 mg/kg total lead and below 5 mg/L soluble lead. The material on the job site:

1. Is not a hazardous waste
2. Does not require disposal at a permitted landfill or solid waste disposal facility

Lead is typically found within the top 2 feet of material in unpaved areas of the highway. Reuse all of the excavated material on the right-of-way.

Handle the material under all applicable laws, rules, and regulations, including those of the following agencies:

1. Cal/OSHA
2. CA RWQCB, Region 6— Lahontan
3. CA Department of Toxic Substances Control

^^

8 PROSECUTION AND PROGRESS

Replace *Reserved* in section 8-1.04C with:

Section 8-1.04B does not apply.

Start job site activities within 55 days after receiving notice that the Contract has been approved by the City. .

Do not start job site activities until the Department authorizes or accepts your submittal for:

1. Biological resource information program

2. CPM baseline schedule
3. WPCP or SWPPP, whichever applies

If the submittals for biological resource information program is authorized, you may enter the job site only to measure controlling field dimensions and locate utilities.

Do not start other job site activities until all the submittals from the above list are authorized or accepted and the following information is received by the Engineer:

1. Notice of Materials To Be Used form.
2. Written statement from the vendor that the order for the sign panels has been received and accepted by the vendor. The statement must show the dates that the materials will be shipped.
3. Written statement from the vendor that the order for electrical material has been received and accepted by the vendor. The statement must show the dates that the materials will be shipped.
4. Written statement from the vendor that the order for structural steel has been received and accepted by the vendor. The statement must show the dates that the materials will be shipped.

You may start job site activities before the 55th day after Contract approval if you:

1. Obtain specified authorization or acceptance for each submittal before the 55th day
2. Receive authorization to start

Submit a notice 72 hours before starting job site activities. If the project has more than 1 location of work, submit a separate notice for each location.

^^

9 PAYMENT

Add to the end of section 9-1.16C:

The following items are eligible for progress payment even if they are not incorporated into the work:

1. Corrugated Steel Pipe
2. Rock Slope Protection Fabric
3. Pavement Markers
4. Handrailing
5. Transition Railing (Type WB-31)
6. Prestressed Concrete Deck Units
7. Joint Seal
8. Bar Reinforcing Steel
9. Chain Link Railing
10. Signal and Lighting

^^

DIVISION II GENERAL CONSTRUCTION

10 GENERAL

Add to section 10-1.02A:

Construct bridge widening according to sequence shown on the plans.

Add to the end of the RSS for section 10-1.02B:

Install loop detectors in the uppermost layer of the new pavement.

Replace *Reserved* in section 10-1.03 with:

No work is allowed within BNSF railroad property from October 1 to December 31.

^^

12 TEMPORARY TRAFFIC CONTROL

Replace section 12-1.04 with:

Install loop detectors in the uppermost layer of the new pavement.

Replace *Reserved* in section 12-4.02C(3)(d) with:

Do not perform work on city streets that interferes with traffic from 6:00 a.m. to 9:30 a.m. or from 3:00 p.m. to 6:00 p.m. hours

Add to the end of the 1st paragraph of section 12-4.02C(7)(a):

except you may use a moving closure during traffic striping and pavement marker placement using a bituminous adhesive. Do not use a moving lane closure when grinding for recessed striping and recessed markers.

Add to the end of section 12-4.02C(7)(a):

Except where prohibited, use an impact attenuator vehicle:

1. To follow behind equipment and workers who are placing and removing components of a closure. Operate the flashing arrow sign in the arrow or caution mode during this activity, whichever applies. Follow at a distance that prevents intrusion into the work space from passing traffic.
2. As a shadow vehicle in a moving lane closure.

After placing components of a stationary traffic control system, you may place the impact attenuator vehicle in advance of the work area or at another authorized location to protect traffic and workers.

Add between the 1st and 2nd paragraphs of section 12-4.04C:

A pedestrian facility closure on the same side of the highway is limited to no more than 1 block. When working on one side of the highway, the pedestrian facility on opposite side of the highway within the same block must be open.

Concurrent pedestrian facility closures on the same side of the highway must be spaced at least 2 blocks apart.

For an intersection with 4 quadrants, close the side serving the 2 quadrants in the same direction of travel.

Provide a temporary pedestrian access route if all 4 intersection quadrants are required to be closed for construction.

^^

13 WATER POLLUTION CONTROL

Add to the end of section 13-3.01A:

This project's risk level is 1.

Add between the 4th and 5th paragraphs of section 13-3.01C(2)(a):

The following RWQCBs will review the authorized SWPPP:

1. Lahontan

^^

14 ENVIRONMENTAL STEWARDSHIP

Add to the 1st paragraph of section 14-6.03A:

This project is within or near habitat for the regulated species shown in the following table:

Regulated Species
Burrowing Owl

This project includes the sensitive habitats shown in the following table:

Sensitive Habitats
Desert Cymopterus
Sagebrush Loeflingia
Beaver Dam Breadroot

Replace item 1 in the 2nd paragraph of section 14-6.03A with:

1. Stop all work within a 100-foot radius of the discovery except as shown in the following table:

Regulated species	Protective radius (feet)
Burrowing Owl	500

Add to the 1st paragraph in section 14-11.13A:

The existing paint system on bridge no. 54C0547 will be disturbed as part of the work activities. The paint system contains lead.

Replace *Reserved* in section 14-11.13B(3) with:

Air monitoring reports, including test results for samples taken after corrective action, must be prepared by the CIH and submitted:

1. Orally within 48 hours after sampling
2. As an informational submittal within 5 days after sampling

Air monitoring reports must include:

1. Date and location of sample collection, sample number, Contract number, bridge number, name of the structure, and District-County-Route-Post Mile
2. Name and address of the certified laboratory that performed the analyses
3. Chain of custody documentation
4. List of emission control measures in place when air samples were taken
5. Air sample results compared to the appropriate permissible exposure limit (PEL)
6. Corrective action recommended by the CIH to ensure exposure to airborne metals outside containment systems and work areas is within specified limits
7. Signature of the CIH who reviewed the data and made recommendations

Replace *Reserved* in section 14-11.13B(4) with:

Submit test results of soil analyses verifying debris containment, including results for soil samples taken after corrective action:

1. Orally within 48 hours after sampling
2. Within 5 days after sampling

Soil sampling results must include:

1. Date and location of sample collection, sample number, Contract number, bridge number, name of the structure, and District-County-Route-Post Mile
2. Concentrations of heavy metals expressed in mg/kg and mg/L
3. Name and address of the certified laboratory that performed the analyses
4. Chain-of-custody documentation

Replace *Reserved* in section 14-11.13D with:

14-11.13D(1) General

Monitor the ambient air and soil in and around the work area to verify the effectiveness of the containment system. Work area monitoring includes:

1. Collecting, analyzing, and reporting air and soil test results
2. Recommending corrective action whenever specified air or soil concentrations are exceeded

Collect air and soil samples at locations designated by the Engineer.

14-11.13D(2) Air Monitoring

Air monitoring must be performed under the direction of a CIH.

Collect and analyze air samples to detect lead under the NIOSH Method 7082 using a detection limit of at least 0.05 $\mu g/m^3$. Collect and analyze air samples to detect other metals under NIOSH Method 7300

using a detection limit of at least 1 percent of the appropriate PEL specified by Cal/OSHA. You may use alternative methods of sampling and analysis with equivalent detection limits.

Concentrations of airborne metals outside containment systems and work areas must not exceed any of the following:

1. Average of 1.5 μg/m^3 of air per day and 0.15 μg/m^3 per day on a rolling 90-day basis. Calculate the average daily concentrations based on accumulated monitoring data and projections based on monitoring trends for the next 90 days or to the end of the work subject to the lead compliance plan if less than the specified averaging period.
2. 10 percent of the action level specified for lead by 8 CA Code of Regs §1532.1.
3. 10 percent of the appropriate PELs specified for other metals by Cal/OSHA.

Collect air samples daily during work activities that disturb the existing paint system. Air samples must be analyzed within 48 hours by a facility accredited by the Environmental Lead Laboratory Accreditation Program of the American Industrial Hygiene Association. If concentrations of airborne metals exceed allowable levels, modify the containment system or work activities to prevent further release of metals. If the CIH recommends corrective action, collect and analyze additional samples after implementing the corrective action unless ordered otherwise.

14-11.13D(3) Soil Sampling for Debris Containment

Collect 4 soil samples before starting work and collect 4 soil samples within 36 hours after cleaning existing steel. A soil sample consists of 5 plugs, each 3/4 inch in diameter and 1/2 inch deep, taken at each corner and center of a 1 sq yd area. Analyze soil samples for:

1. Total lead by US EPA Method 6010B or US EPA Method 7000 series
2. Soluble lead by California Waste Extraction Test (CA WET)

The laboratory that analyzes the samples must be certified by the SWRCB's ELAP for all analyses to be performed.

Concentrations of heavy metals in the work area's soil must not increase when the existing paint system is disturbed. If soil sampling shows an increase in the concentrations of heavy metals after completing the work:

1. Clean the affected area
2. Resample until soil sampling and testing shows concentrations of heavy metals less than or equal to the concentrations collected before the start of work

Add to the end of the 1st paragraph of section 14-11.13F:

This waste characterization testing must include:

1. Total lead by US EPA Method 6010B
2. Soluble lead by California Waste Extraction Test (CA WET)
3. Soluble lead by Toxicity Characteristic Leaching Procedure (TCLP)

Add to the beginning of section 14-11.13G(2):

After the Engineer accepts the waste characterization test results, dispose of the debris:

1. Within 90 days after accumulating 220 lb of debris
2. At a DTSC-permitted Class I facility located in California

Make all arrangements with the operator of the disposal facility.

If less than 220 lb of hazardous waste is generated in total, dispose of it within 90 days after the start of the accumulation of the debris.

^^

DIVISION III EARTHWORK AND LANDSCAPE

17 GENERAL

Add to section 17-2.03A:

Replace the 4th paragraph in section 17-2.03A with:

Clear and grub vegetation only within the excavation and embankment slope lines.

Replace section 17-2.03D with:

You may place vegetation in embankment areas. Comply with section 19-6.

Place vegetation as specified for Method I or II below:

Method I:

1. Place vegetation outside of the 1:1 inclined plane sloping out and down from the outside edge of the shoulder of the planned roadbed. Do not place vegetation within 5 feet of the finished slope line measured normal to the slope.
2. Mix brush and debris with at least 50 percent earth. Place the mixture in uniform layers.
3. Do not use vegetation material where it will interfere with planned work.

Method II:

1. Place vegetation at least:

1.1. 15 feet beneath the grading plane.

1.2. 10 feet from the surface of any embankment slope.

1.3. 6 feet horizontally from and not beneath any planned structure including abutments, walls, footings, foundations, piles, drainage structures, and utility installations.

2. Chip brush, grass, weeds, slash, and limbs or logs under 4 inches in diameter. Place chips on the completed embankment slopes and mix with the underlying earth so that the vegetation will not support combustion.

^^^

19 EARTHWORK

Add to section 19-1.01A:

See City Specifications Part III - Section VI for earthwork provisions that supersede the Standard Specifications.

Add to the end of section 19-3.01A:

Structure backfill includes constructing the geocomposite drain system. The systems must comply with section 68-7.

Replace *Reserved* in section 19-3.03B(3) with:

Excavate for pier columns such that concrete is placed against firm, undisturbed material on the bottom and sides of the excavation, at or outside the neat lines of the pier columns.

Adequately support the excavation using shoring, lagging, casings, liners, or other bracing.

Rock bolts and wire mesh may remain in place.

Steel shoring, steel and timber lagging, steel casings, steel liners, and other steel bracing may remain in place, subject to the following requirements:

1. Bracing remaining in place must be the minimum necessary to safely support the excavation.
2. Place bracing in an open arrangement with enough clearance between braces to allow concrete to flow around the bracing and provide the required clearance to the reinforcement.
3. Steel casings, liners, and lagging must be outside the neat lines of the pier columns.
4. Perforate steel casings and liners with holes of 6-inch minimum diameter or place in an open arrangement such that at least 50 percent of the area of the casings and liners allows the ready flow of concrete through and around openings.
5. Steel and timber lagging must be in an open arrangement with the area of lagging at most 50 percent of the area of the sides of the excavation. The lagging must allow ready flow of concrete through and around openings.
6. Distribute open areas in casings, liners, and lagging uniformly over the sides of the excavation for the full depth of the pier column.

Remove timber bracing extending across pier columns within the neat lines of the columns before or during concrete placement.

Add to section 19-3.04:

Structure excavation (pier column) is measured from the bottom of the completed foundation excavation to the upper and horizontal limits shown.

Add to section 19-7.02A:

Obtaining imported borrow includes the following:

1. Constructing an access road as shown.
2. Clearing and grubbing the material site.
3. Selecting material within the source.
4. Screening and wasting from 30 to 60 percent of the finer material.
5. Washing materials so that the imported borrow complies with the sand equivalent requirements.

Add to section 19-7.02C:

Imported borrow placed within 4 feet of the finished grade must have an R-value of at least 50.

Strip materials that adversely affect the imported borrow properties.

^^

21 EROSION CONTROL

Add to section 21-2.02H:

Straw must be certified weed free under the Department of Food and Agriculture.

Add to section 21-2.02P:

Straw for fiber roll must be certified weed free under the Department of Food and Agriculture.

Replace the RSS for section 21-3 with:

21-3 PERMANENT EROSION CONTROL ESTABLISHMENT WORK

21-3.01 GENERAL

21-3.01A Summary

Section 21-3 includes specifications for performing permanent erosion control establishment work.

Permanent erosion control establishment work consists of weekly inspections of the project site for deficiencies in erosion control features.

The permanent erosion control establishment period starts after permanent erosion control work has been completed.

The Engineer notifies you when the permanent erosion control establishment period starts and furnishes weekly statements regarding the number of working days credited to the permanent erosion control establishment period after the notification.

At the start of the permanent erosion control establishment period you may request relief from maintenance and protection for work items that are not associated with water pollution control and permanent erosion control establishment work.

Working days on which no work is required during the permanent erosion control establishment period are credited as permanent erosion control establishment working days, regardless of whether or not you performed permanent erosion control establishment work.

Working days on which you fail to adequately perform permanent erosion control establishment work as required are not credited as permanent erosion control establishment working days.

Working days that occur after you fail to meet a due date for a Permanent Erosion Control Establishment (PECE) Report submittal will not be credited as permanent erosion control establishment working days.

21-3.01B Definitions

Not Used

21-3.01C Submittals

Submit a Permanent Erosion Control Establishment (PECE) Report form as an informational submittal within 24 hours of completing a weekly inspection and within 24 hours of each qualifying rain event. The WPC manager is responsible for the preparation and submittal of the PECE report. The report must identify any deficiencies that require repair, adjustment, or reapplication of materials, including:

1. Slides
2. Slipouts
3. Surface erosion
4. Damage to:
   - 4.1. Erosion control devices
   - 4.2. Water pollution control devices
5. Poor seed germination
6. Poor plant growth
7. Dead or damaged erosion control plant material
8. Misaligned features
9. Required repair work

21-3.01D Quality Assurance

Perform a final inspection of the permanent erosion control establishment work in the presence of the Engineer 20 to 30 days before the anticipated contract acceptance date provided by the Engineer.

21-3.02 MATERIALS

Not Used

21-3.03 CONSTRUCTION

Perform work ordered from the PECE report. This work is change order work.

21-3.04 PAYMENT

Not Used

^^

DIVISION IV SUBBASES AND BASES

26 AGGREGATE BASES

Add to section 26-1.02:

See City Specifications Part III - Section VII for Class 2 Aggregate Base provisions that supersede the Standard Specifications.

^^

DIVISION V SURFACINGS AND PAVEMENTS

39 ASPHALT CONCRETE

Add to section 39:

See City Specifications Part III - Section I for Asphalt Concrete provisions that supersede the Standard Specifications for Hot Mix Asphalt.

Asphalt concrete (Type C) shall be C2-PG 70-10 in conformance with the Standard Specifications for Public Works Construction by the American Public Works Association.

^^

DIVISION VI STRUCTURES

46 GROUND ANCHORS AND SOIL NAILS

Add to section 46-1.01A:

Construct retaining wall and place ground anchors prior to pier footing excavation.

Add to section 46-2.01D(2)(b)(i):

Performance test a minimum of two (2) ground anchors per wall. The Engineer determines which anchors are to be performance tested.

^^

50 PRESTRESSING CONCRETE

Replace the 2nd paragraph of section 50-1.01C(3) with:

For initial review, submit:

1. 8 copies for railroad bridges unless the project includes a BNSF Railway underpass
2. 10 copies for railroad bridges if the project includes a BNSF Railway underpass
3. 6 copies for structures other than railroad bridges

^^

51 CONCRETE STRUCTURES

Add to section 51-1.01C(1):

If the methacrylate crack treatment is performed within 100 feet of a residence, business, or public space, submit a public safety plan that includes:

1. Public notification letter with a list of delivery and posting addresses. The letter must describe the work to be performed and state the treatment work locations, dates, and times. Deliver the letter to residences and businesses within 100 feet of overlay work and to local fire and police officials not less than 7 days before starting overlay activities. Post the letter at the job site.
2. Airborne emissions monitoring plan. A CIH certified in comprehensive practice by the American Board of Industrial Hygiene must prepare and execute the plan. The plan must have at least 4 monitoring points including the mixing point, application point, and point of nearest public contact. Monitor airborne emissions during overlay activities.
3. Action plan for protecting the public if levels of airborne emissions exceed permissible levels.
4. Copy of the CIH's certification.

After completing methacrylate crack treatment activities, submit results from monitoring production airborne emissions as an informational submittal.

Replace the 2nd paragraph of section 51-1.01C(1) with:

Submit a deck placement plan for concrete bridge decks. Include in the placement plan your method and equipment for ensuring that the concrete bridge deck is kept damp by misting immediately after finishing the concrete surface.

Add to section 51-1.02B:

Concrete for concrete bridge decks must contain polymer fibers. Each cubic yard of concrete must contain at least 1 pound of microfibers and at least 3 pounds of macrofibers.

Concrete for concrete bridge decks must contain a shrinkage reducing chemical admixture. Each cubic yard of concrete must contain at least 3/4 gallon of a shrinkage reducing admixture. If you use the maximum dosage rate shown on the Authorized Material List for the shrinkage reducing admixture, your submitted shrinkage test data does not need to meet the shrinkage limitation specified.

Add to section 51-1.03D(4):

Seal construction joint between new and existing box culvert as shown. Seal with Sikadur epoxy adhesive and Sikaflex elastomeric compound, or approved equal.

Replace the 2nd paragraph of section 51-1.03H with:

Cure the top surface of bridge decks by (1) misting and (2) the water method using a curing medium under section 90-1.03B(2). After strike off, immediately and continuously mist the deck with an atomizing nozzle that forms a mist and not a spray. Continue misting until the curing medium has been placed and the application of water for the water method has started. At the end of the curing period, remove the curing medium and apply curing compound on the top surface of the bridge deck during the same work shift under section 90-1.03B(3). The curing compound must be curing compound no. 1.

Delete the 4th paragraph of section 51-1.03H.

^^

60 EXISTING STRUCTURES

Add to section 60-2.01A:

Remove the following structures or portions of structures:

Bridge no./Structure name	Description of work
54C0547	Remove bridge barrier, sidewalk, portion of overhang, top portion of wingwalls and shear keys, and completely remove slope paving.
RCB in front of Br No. 54C0547 Abutment 1	Remove headwalls

Replace the 5th paragraph of section 60-2.02C(1) with:

Temporary support shoring, temporary bracing, and protective covers must not encroach upon traffic lanes open to traffic or within 21'-6" feet measured vertically from top of rail.

Replace item 4 in the list in the 1st paragraph in section 60-2.02C(2) with:

4. Provide the openings specified in section 12-4. If no openings are specified for removal work, provide a vertical opening of 22 feet above top of rail. Existing horizontal opening cannot be reduced.

Add to the list in the 1st paragraph in section 60-2.02C(2):

6. Falsework or supports for protective covers must not extend below the vertical clearance level or to the ground line at any location within the roadbed.

Replace the 3rd paragraph in section 60-2.02C(2) with:

At locations where entire girders are removed, protective covers must extend at least 4 feet beyond the outside face of the bridge railing.

Add to section 60-3.02C(7):

When abrasive blasting within 10 feet of traffic, remove the residue using a vacuum attachment operating concurrently with the blasting equipment.

Add to section 60-3.03B(1)(c):

Submit a public safety plan. Include with the submittal:

1. Public notification letter describing the work to be performed with treatment work locations, dates and times. Include a list of addresses for delivery and posting of the letter.
2. Airborne emissions monitoring plan. A CIH certified in comprehensive practice by the American Board of Industrial Hygiene must prepare and execute the plan. The plan must have at least 4 monitoring points, including the mixing point, application point, and point of nearest public contact.
3. Action plan for protecting the public if airborne emissions levels exceed permissible levels.
4. Copy of the CIH's certification.

Submit results from airborne emissions monitoring of the test area before starting production work.

Submit results from production airborne emissions monitoring as an informational submittal after completing treatment activities.

Add to the list in the 2nd paragraph of section 60-3.03B(1)(d):

4. Suitability of the airborne emissions monitoring plan

Add to the beginning of section 60-3.03B(3):

Deliver the public notification letter to residences and businesses within 100 feet of treatment work and to local fire and police officials at least 7 days before starting treatment activities. Post the letter at the job site.

Monitor airborne emissions during treatment activities.

^^

DIVISION VIII MISCELLANEOUS CONSTRUCTION

73 CONCRETE CURBS AND SIDEWALKS

Add to section 73-1.01:

See City Specifications Part III - Section II and City Standard Drawings for concrete curb and gutter, cross gutters, spandrels, sidewalks, driveway approaches and driveway provisions that supersede the Standard Specifications.

Add to section 73-1.02A:

Concrete must be minor concrete complying with section 90-2 and may contain returned plastic concrete complying with section 90-9.

Add to the beginning of section 73-3.03:

Before placing concrete, verify that forms and job site constraints allow the required dimensioning and slopes shown. Immediately notify the Engineer if you encounter job site conditions that will not accommodate the design details. Ordered modifications are change order work.

^^^

DIVISION IX TRAFFIC CONTROL DEVICES
83 RAILINGS AND BARRIERS

Replace *Reserved* in section 83-2.04C with:

83-2.04C(1) General

83-2.04C(1)(a) Summary

Section 83-2.04C includes specifications for constructing alternative flared terminal systems.

83-2.04C(1)(b) Definitions

Not Used

83-2.04C(1)(c) Submittals

Submit a certificate of compliance for alternative flared terminal systems.

83-2.04C(1)(d) Quality Assurance

Obtain the Department-authorized manufacturer’s drawing and the manufacturer’s check list for the assembly and installation of the alternative flared terminal system from the manufacturer’s representative or distributor. Notify the Engineer of the type of alternative flared terminal system to be installed at each location before starting installation activities. Complete, sign, and date the check list for each installed terminal system and submit a copy of the completed and signed check list for each installed location. The Engineer signs and dates the completed check lists, verifying the terminal system at each location was assembled and installed under the manufacturer’s instructions and as described.

83-2.04C(2) Materials

Alternative flared terminal systems must be one of the following or a Department-authorized equal:

1. Type FLEAT-SP-MGS for steel terminal system. Type FLEAT-MGS terminal system must be a FLEAT-350 with a system length of 37’-6”,manufactured by Road Systems, Inc., located in Big Spring, Texas, and must include items detailed for Type FLEAT-MGS terminal system, as shown. The FLEAT -350 can be obtained from the following distributors:

Address	Telephone no.
UNIVERSAL INDUSTRIAL SALES PO BOX 699 PLEASANT GROVE UT 84062	(801) 785-0505
GREGORY INDUSTRIES INC 4100 13TH ST SW CANTON OH 44708	(330) 477-4800

2. Type SRT-31 terminal system. Type SRT-31 terminal system must be an SRT-350 Slotted Rail Terminal (6-post system) with a system length of 37’-6”, manufactured by Trinity Highway Products, LLC, and must include items detailed for Type SRT-31 terminal system, as shown. The SRT-350 Slotted Rail Terminal (6-post system) can be obtained from the manufacturer:

Address	Telephone no.
TRINITY HIGHWAY PRODUCTS LLC PO BOX 99 CENTERVILLE UT 84012	(800) 772-7976

3. Type 31" X-TENSION terminal system. Type 31" X-Tension terminal system must be a 31" X-Tension Guard Rail End Terminal manufactured by Barrier Systems, Inc., located in Vacaville, CA, and must

include items detailed for Type 31" X-Tension terminal system, as shown. The 31" X-Tension Guard Rail End Terminal can be obtained from the following distributor:

Address	Telephone no.
STATEWIDE SAFETY AND SIGNS INC 130 GROBRIC COURT FAIRFIELD CA 94533	(800) 770-2644

83-2.04C(3) Construction

Install alternative flared terminal systems under the manufacturer's installation instructions.

Identify each terminal system by painting the type of terminal system in 2-inch-high, neat, black letters and figures on the backside of the rail element between system posts number 4 and 5. Paint must be metallic acrylic resin type spray paint. Before applying terminal system identification, the surface to receive terminal system identification must be free of all dirt, grease, oil, salt, or other contaminants by washing the surface with detergent or other suitable cleaner. Rinse thoroughly with fresh water and allow to fully dry.

For Type SRT -31 terminal systems, install a cable release post at Post 1 and 6'-0" steel yielding terminal at Posts 2 through 6. Ddrive the cable release post and steel yielding terminal with or without pilot holes, or place them in drilled holes. If placed in pilot or drilled holes, backfill the space around the posts with selected earth that is free of rock. Place the earth in 4-inch-thick layers. Moisten and thoroughly compact each layer.

For Type FLEAT-W-MGS terminal system, install the soil tube with soil plate attached at Posts 1 and 2, breakaway cable terminal posts at Posts 1 and 2, and controlled release terminal posts at Posts 3 through 6. Drive the soil tubes with soil plates with or without pilot holes, or place them in drilled holes. Backfill the space around the soil tubes with selected earth that is free of rock. Placed the earth in 4-inch-thick layers. Moisten and thoroughly compact each layer. The breakaway cable terminal posts must be inserted into the soil tubes by hand and must not be driven.

For Type 31" X-Tension terminal system, drive the steel post and soil anchor with or without pilot holes, or place them in drilled holes. Backfill the space around the steel post and soil anchor with selected earth that is free of rock in 4-inch-thick layers. Moisten and thoroughly compact each layer. Insert wood terminal posts into drilled holes by hand and backfill in the same manner as the steel post and soil anchor. Wood terminal posts must not be driven. All blocks must be wood.

83-2.04C(4) Payment

Not Used

Replace Section 83-2.10 with:

83-2.10 Steel Picket Railing

83-2.10A General

Section 83-2.10 includes specifications for constructing Steel Picket Railing.

Submit shop drawings for the Steel Picket Railing.

Clean and paint railing, posts, plates, bolts and nuts per section 59-2. Railing color is black.

Welding must comply with AWS D1.1.

83-2.10B Materials

The materials for Steel Picket Railing components must comply with the specifications shown in the following table:

Material	Specification
Rail and post tubes	ASTM A500/A500M, Grade B
Rolled bars and plates	ASTM A36/A36M
Rail splice sleeves	ASTM A36/A36M
Bolts	ASTM A325, A325M, or A449
Threaded rods	ASTM A449
Nuts and washers for bolts and threaded rods	ASTM A325 or A325M

Rail tubes must be shop bent or fabricated to fit the horizontal curve if the radius is less than 900 feet.

If the vertical radius of the Steel Picket Railing is 30 feet or less, that portion of the railing must be either shop bent or built up from 1/4-inch-thick structural steel plates. The built-up Steel Picket Railing rail elements must match the seamless tubing in appearance.

The difference between out-to-out rail splice sleeve dimensions and the clear inside dimensions of the tubular steel rail elements must not exceed 1/16 inch after painting.

83-2.10C Construction

Steel Picket Railing must present a smooth, uniform appearance in their final position, conforming closely to the horizontal and vertical lines shown or ordered.

Carefully handle the materials such that no parts are bent, broken, abraded, or otherwise damaged. Do not use manufacturing, handling, or installation methods that damage or distort the members or damage the paint.

Adjust the vertical position of the Steel Picket Railing to compensate for the camber and dead load deflection of the superstructure. The Engineer determines the adjustment amount before the railing is installed.

Any abrasions or exposed steel will be ground flush with adjacent surfaces, cleaned with a wire brush to fully remove any rust or scale, primed and coated with two coats of paint to achieve a finish consistent with the shop fabricated sections.

Expansion joints must have pipe sleeves.

Storage: Railing must be stored in a clean, dry location, away from uncured concrete and masonry, protected from damage of any kind. Railings must be covered with waterproof paper, tarpaulin, or polyethylene sheeting in such a manner that air circulation will be provided. Finishes of railing systems and handrails must be protected from damage during constructions by use of temporary protective coverings. Coverings are to be removed upon completion of the work.

83-2.10D Payment

Not Used

^^

84 MARKINGS

Replace *Reserved* in section 84-9.03C with:

Residue from the removal of painted or thermoplastic traffic stripes and pavement markings contains lead from the paint or thermoplastic. The average lead concentrations are less than 1,000 mg/kg total lead and 5 mg/L soluble lead. This residue:

1. Is a nonhazardous waste
2. Does not contain heavy metals in concentrations exceeding the thresholds established by the Health and Safety Code and 22 CA Code of Regs

3. Is not regulated under the Federal Resource Conservation and Recovery Act (RCRA), 42 USC § 6901 et seq.

Management of this material exposes workers to health hazards that must be addressed in your lead compliance plan.

^^

DIVISION X ELECTRICAL WORK

86 GENERAL

Supplement Section 86 of the with the following:

Add to section 86:

See City of Victorville Section C-21 – Special Provisions for Traffic Signal Controller Units, Cabinets and Auxiliary Equipment to be used in conjunction with the State Standard Specifications.

^^

87 ELECTRICAL SYSTEMS

Supplement Section 87 of the with the following:

Add to section 87:

See City of Victorville Section C-21 – Special Provisions for Traffic Signal Controller Units, Cabinets and Auxiliary Equipment to be used in conjunction with the State Standard Specifications.

^^

DIVISION XI MATERIALS

90 CONCRETE

Add to section 90-1.01C:

90-1.01C(11) Polymer Fibers

Submit fiber manufacturer's product data and instructions for use.

Submit a certificate of compliance for each shipment and type of fibers.

Replace the row for bridge deck concrete in the table in the 1st paragraph of section 90-1.02A with:

Bridge deck concrete	0.032

Add to section 90-1.02:

90-1.02K Polymer Fibers

Fibers must comply with ASTM D7508. Microfibers must be from 1/2 to 2 inches long. Macrofibers must be from 1 to 2-1/2 inches long.

APPENDIX A

(RAILROAD AGREEMENT)

RECEIVED
SEP 11 2017
ENGINEERING

BNSF Railway

ENGINEERING SERVICES DEPARTMENT

OVERPASS AGREEMENT

Between

THE BNSF RAILWAY

and

CITY OF VICTORVILLE

September 8, 2017

BNSF File No. BF-10010125
LOCATION: City of Victorville, CA
Railroad LS 7600 MP 41.587

OVERPASS AGREEMENT

BNSF File No. BF10010125
Bear Valley Cutoff Overpass
U.S. D.O.T. No. 026086L
LS 7600
MP 41.587
Cajon Subdivision

This Agreement **("Agreement")**, is executed to be effective as of December 11, 2017 **("Effective Date")**, by and between BNSF RAILWAY COMPANY, a Delaware corporation **("BNSF"),** and the City of Victorville, a political subdivision of the State of California **("Agency").**

RECITALS:

WHEREAS, BNSF owns and operates a line of railroad in and through the City of Victorville, State of California; and

WHEREAS, the line of railroad exists on an easement within a portion of APN 3091-191-09 outlined in document CL 3507 dated October 1st 1903; and

WHEREAS, the Agency proposes to widen the existing Bear Valley Cutoff Overpass to accommodate the construction of sidewalks, shoulders, and a median; and

WHEREAS, the Agency proposes to retrofit the bridge including seismic and the construction of pier protection walls; and

WHEREAS, the Agency proposes to rehabilitate the bridge by sealing the deck with methacrylate resin, patching holes, and sealing the cracks in the concrete; and

WHEREAS, the Agency will reconstruct, own, operate, and maintain the Bear Valley Cutoff Overpass Structure as described in Article 1 below.

NOW, THEREFORE, in consideration of the mutual covenants and agreements of the parties contained herein, the receipt and sufficiency of which are hereby acknowledged, the parties agree as follows:

ARTICLE I) SCOPE OF WORK

1. The term **"Project"** as used herein includes any and all work related to the construction of the proposed Bear Valley Cutoff Overpass (hereinafter referred to as the

"Structure"), more particularly described on the Exhibit A attached hereto and incorporated herein, including, but not limited to, any and all changes to telephone, telegraph, signal and electrical lines and appurtenances, temporary and permanent track work, fencing, grading, alterations to or new construction of drainage facilities, preliminary and construction engineering and contract preparation. Additionally, temporary controls during construction must be in compliance with Section 8A-08, "Temporary Traffic Control Zones" of the Manual of Uniform Traffic Control Devices ("MUTCD"), U.S. Department of Transportation.

ARTICLE II) BNSF OBLIGATIONS

In consideration of the covenants of Agency set forth herein and the faithful performance thereof, BNSF agrees as follows:

1. Upon Agency's payment to BNSF of an administrative fee in the sum of Two Thousand and No/100 Dollars ($2,000), together with the Temporary Construction License Fee in the sum of Twenty Thousand Four Hundred and No/100 Dollars ($20,400.00), BNSF hereby grants to Agency, its successors and assigns, upon and subject to the terms and conditions set forth in this Agreement, a temporary non-exclusive license (hereinafter called, "Temporary Construction License") to construct the Structure across or upon the portion of BNSF's right-of-way described further on Exhibit A-1, excepting and reserving BNSF's rights, and the rights of any others who have obtained, or may obtain, permission or authority from BNSF, to do the following:

(a) Operate, maintain, renew and/or relocate any and all existing railroad track or tracks, wires, pipelines and other facilities of like character upon, over or under the surface of said right-of-way;

(b) Construct, operate, maintain, renew and/or relocate upon said right-of-way, without limitation, such facilities as the BNSF may from time to time deem appropriate, provided such facilities do not materially interfere with the Agency's use of the Structure;

(c) Otherwise use or operate the right-of-way as BNSF may from time to time deem appropriate, provided such use or operations does not materially interfere with the Agency's use of the Structure; and

(d) Require the Agency or its contractor to execute a Temporary Construction Crossing Agreement, for any temporary crossing requested to aid in the construction of this Project.

The term of the Temporary Construction License begins on the Effective Date and ends on the earlier of (i) substantial completion of the Structure, or (ii) Thirty Six (36) months following the Effective Date. The Temporary Construction License and related rights given by BNSF to Agency in this provision are without warranty of title of any kind, express or implied, and no covenant of warranty of title will be implied from the use of any word or words herein contained. The Temporary Construction License is for construction

of the Structure only and shall not be used by Agency for any other purpose. Agency acknowledges and agrees that Agency shall not have the right, under the Temporary Construction License, to use the Structure for any other purpose than (i) construction, or (ii) the ongoing passage of pedestrian and vehicular traffic over the Structure. In the event Agency is evicted by anyone owning, or claiming title to or any interest in said right-of-way, BNSF will not be liable to Agency for any damages, losses or any expenses of any nature whatsoever. The granting of similar rights to others, subsequent to the date of this Agreement, will not impair or interfere with the rights granted to Agency herein.

Upon Agency's payment to BNSF of the additional sum of Six Thousand One Hundred and No/100 Dollars ($6,100.00), such payment to be made within thirty (30) days of issuing the Notice to Proceed pursuant to Article III, Section 17 of this Agreement, and provided further that Agency is in compliance with the term and conditions of this Agreement, BNSF will grant to Agency, its successors and assigns, an easement (hereinafter called, the "Easement") to enter upon and use that portion of BNSF's right-of-way as is necessary to use and maintain the Structure, substantially in the form of Exhibit B attached to this Agreement. If Agency fails to pay BNSF within the thirty day time period set forth in the preceding sentence, BNSF may stop construction of the Project until full payment is received by BNSF.

2. BNSF will furnish all labor, materials, tools, and equipment for railroad work required for the construction of the Project, such railroad work and the estimated cost thereof being as shown on Exhibit D attached hereto and made a part hereof. In the event construction on the Project has not commenced within six (6) months following the Effective Date, BNSF may, in its sole and absolute discretion, revise the cost estimates set forth in said Exhibit D. In such event, the revised cost estimates will become a part of this Agreement as though originally set forth herein. Any item of work incidental to the items listed on Exhibit D not specifically mentioned therein may be included as a part of this Agreement upon written approval of Agency, which approval will not be unreasonably withheld. Construction of the Project must include the following railroad work by BNSF:

(a) Procurement of materials, equipment and supplies necessary for the railroad work;

(b) Preliminary engineering, design, and contract preparation;

(c) Furnishing of flagging services during construction of the Project as required and set forth in further detail on Exhibit C;

(d) Furnishing engineering and inspection as required in connection with the construction of the Project;

(e) Providing a contract project coordinator, at Agency's expense, to serve as a project manager for the Project;

3. BNSF will do all railroad work set forth in Article II, Section 2 above on an actual cost basis, when BNSF, in its sole discretion, determines it is required by its labor agreements to perform such work with its own employees working under applicable collective bargaining agreements.

4. Agency agrees to reimburse BNSF for work of an emergency nature caused by Agency or Agency's contractor in connection with the Project which BNSF deems is reasonably necessary for the immediate restoration of railroad operations, or for the protection of persons or BNSF property. Such work may be performed by BNSF without prior approval of Agency and Agency agrees to fully reimburse BNSF for all such emergency work, which may be caused by City or City's contractor.

5. BNSF may charge Agency for insurance expenses, including self-insurance expenses, when such expenses cover the cost of Employer's Liability (including, without limitation, liability under the Federal Employer's Liability Act) in connection with the construction of the Project. Such charges will be considered part of the actual cost of the Project, regardless of the nature or amount of ultimate liability for injury, loss or death to BNSF's employees, if any.

6. During the construction of the Project, BNSF will send Agency progressive invoices detailing the costs of the railroad work performed by BNSF under this Agreement. Agency must reimburse BNSF for completed force-account work within thirty (30) days of the date of the invoice for such work. Upon completion of the Project, BNSF will send Agency a detailed invoice of final costs, segregated as to labor and materials for each item in the recapitulation shown on Exhibit D. Pursuant to this section and Article IV, Section 7 herein, Agency must pay the final invoice within ninety (90) days of the date of the final invoice. BNSF will assess a finance charge of .033% per day (12% per annum) on any unpaid sums or other charges due under this Agreement which are past its credit terms. The finance charge continues to accrue daily until the date payment is received by BNSF, not the date payment is made or the date postmarked on the payment. Finance charges will be assessed on delinquent sums and other charges as of the end of the month and will be reduced by amounts in dispute and any unposted payments received by the month's end. Finance charges will be noted on invoices sent to Agency under this section. **For purposes of computing the time limits prescribed by Section 911.2 of the California Government Code for the presentment of a claim against the Agency the cause of action for failure to reimburse BNSF for the costs of the Railroad work performed by it pursuant to this Agreement shall be deemed to have accrued one hundred and eighty (180) days of the date of the final invoice.**

ARTICLE III) AGENCY OBLIGATIONS

In consideration of the covenants of BNSF set forth herein and the faithful performance thereof, Agency agrees as follows:

1. Agency must furnish to BNSF plans and specifications for the Project. Four sets of said plans (reduced size 11" x 17"), together with two copies of calculations, and two copies of specifications in **English Units**, must be submitted to BNSF for approval prior to commencement of any construction. BNSF will give Agency final written approval of the plans and specifications substantially in the form of Exhibit E, attached to this Agreement and made a part hereof. Upon BNSF's final written approval of the plans and specifications, said plans and specifications will become part of this Agreement and are hereby incorporated herein. Any approval of the plans and specifications by BNSF shall in no way obligate BNSF in any manner with respect to the finished product design and/or construction. Any approval by BNSF shall mean only that the plans and specifications meet the subjective standards of BNSF, and such approval by BNSF shall not be deemed to mean that the plans and specifications or construction is structurally sound and appropriate or that such plans and specifications meet applicable regulations, laws, statutes or local ordinances and/or building codes.

2. Agency must make any required application and obtain all required permits and approvals for the construction of the Project.

3. Agency must provide for and maintain minimum vertical and horizontal clearances, as required in Exhibit C and as approved by BNSF as part of the plans and specifications for the Project.

4. Agency must acquire all rights of way necessary for the construction of the Project.

5. Agency must make any and all arrangements, in compliance with BNSF's Utility Accommodation Manual (http://www.bnsf.com/communities/faqs/pdf/utility.pdf), for the installation or relocation of wire lines, pipe lines and other facilities owned by private persons, companies, corporations, political subdivisions or public utilities other than BNSF which may be necessary for the construction of the Project.

6. Agency must construct the Project as shown on the attached Exhibit A and do all work ("Agency's Work") provided for in the plans and specifications for the Project, except railroad work that will be performed by BNSF hereunder. Agency must furnish all labor, materials, tools and equipment for the performance of Agency's Work. The principal elements of Agency's Work are as follows:

(a) Construction of the Structure;

(b) All necessary grading and paving, including backfill of excavations and restoration of disturbed vegetation on BNSF's right-of-way;

(c) Provide suitable drainage, both temporary and permanent;

(d) Provide appropriate pedestrian control during construction;

(e) Installation and maintenance of an 8-ft. high fence and/or concrete combination (throw fence) on the outside barrier of the Structure;

(f) Job site cleanup including removal of all construction materials, concrete debris, surplus soil, refuse, contaminated soils, asphalt debris, litter and other waste materials to the satisfaction of BNSF;

7. Agency must apply and maintain said D.O.T. Crossing number 026086L in a conspicuous location on the Structure.

8. Agency's Work must be performed by Agency or Agency's contractor in a manner that will not endanger or interfere with the safe and timely operations of BNSF and its facilities.

9. For any future inspection or maintenance, either routine or otherwise, performed by subcontractors on behalf of the Agency, Agency shall require the subcontractors to comply with the provisions of the attached Exhibit C and execute the agreement attached hereto as Exhibit C-1. Prior to performing any future maintenance with its own personnel, Agency shall: comply with all of BNSF's applicable safety rules and regulations; require any Agency employee performing maintenance to complete the safety training program at the BNSF's Internet Website "**www.BNSFContractor.com**"; notify BNSF when, pursuant to the requirements of Exhibit C, a flagger is required to be present; procure, and have approved by BNSF's Risk Management Department, Railroad Protective Liability insurance.

10. Agency must require its contractor(s) to notify BNSF's Roadmaster at least thirty (30) calendar days prior to requesting a BNSF flagman in accordance with the requirements of Exhibit C attached hereto. Additionally, Agency must require its contractor(s) to notify BNSF's Manager of Public Projects thirty (30) calendar days prior to commencing work on BNSF property or near BNSF tracks.

11. Agency or its contractor(s) must submit four (4) copies of any plans (including two sets of calculations in **English Units**) for proposed shoring, falsework or cribbing to be used over, under, or adjacent to BNSF's tracks to BNSF's Manager of Public Projects for approval. The shoring, falsework or cribbing used by Agency's contractor shall comply with the BNSF Bridge Requirements set forth on Exhibit F and all applicable requirements promulgated by state and federal agencies, departments, commissions and other legislative bodies. If necessary, Agency must submit for approval two (2) copies of a professionally engineered demolition plan, as set forth in Exhibit G, with applicable calculations to BNSF's Manager of Public Projects.

12. Agency must include the following provisions in any contract with its contractor(s) performing work on said Project:

(a) The Contractor is placed on notice that fiber optic, communication and other cable lines and systems (collectively, the "Lines") owned by various telecommunications companies may be buried on BNSF's

property or right-of-way. The locations of these Lines have been included on the plans based on information from the telecommunications companies. The Contractor will be responsible for contacting BNSF's Engineering Representative – Greg Rousseau, BNSF's Signal Representative – Terry Brooks and the telecommunications companies and notifying them of any work that may damage these Lines or facilities and/or interfere with their service. The Contractor must also mark all Lines shown on the plans or marked in the field in order to verify their locations. The Contractor must also use all reasonable methods when working in the BNSF right-of-way or on BNSF property to determine if any other Lines (fiber optic, cable, communication or otherwise) may exist.

(b) The Provider will be responsible for the rearrangement of any facilities or Lines determined to interfere with the construction. The Contractor must cooperate fully with any telecommunications company(ies) in performing such rearrangements.

(c) Failure to mark or identify these Lines will be sufficient cause for BNSF's engineering representative (Greg Rousseau) to stop construction at no cost to the Agency or BNSF until these items are completed.

(d) In addition to the liability terms contained elsewhere in this Agreement, the Contractor hereby indemnifies, defends and holds harmless BNSF for, from and against all cost, liability, and expense whatsoever (including, without limitation, attorney's fees and court costs and expenses) arising out of or in any way contributed to by any act or omission of Contractor, its subcontractors, agents and/or employees that cause or in any way or degree contribute to (1) any damage to or destruction of any Lines by Contractor, and/or its subcontractors, agents and/or employees, on BNSF's property or within BNSF's right-of-way, (2) any injury to or death of any person employed by or on behalf of any telecommunications company, and/or its contractor, agents and/or employees, on BNSF's property or within BNSF's right-of-way, and/or (3) any claim or cause of action for alleged loss of profits or revenue by, or loss of service by a customer or user of such telecommunication company(ies). **THE LIABILITY ASSUMED BY CONTRACTOR WILL NOT BE AFFECTED BY THE FACT, IF IT IS A FACT, THAT THE DAMAGE, DESTRUCTION, INJURY, DEATH, CAUSE OF ACTION OR CLAIM WAS OCCASIONED BY OR CONTRIBUTED TO BY THE NEGLIGENCE OF BNSF, ITS AGENTS, SERVANTS, EMPLOYEES OR OTHERWISE, EXCEPT TO THE EXTENT THAT SUCH CLAIMS**

ARE PROXIMATELY CAUSED BY THE WILLFUL MISCONDUCT OR SOLE NEGLIGENCE OF BNSF.

13. Agency must require compliance with the obligations set forth in this Agreement, including Exhibit C and Exhibit C-1, and incorporate in each prime contract for construction of the Project, or the specifications therefor (i) the provisions set forth in Article III and IV; and (ii) the provisions set forth in Exhibit C, Exhibit C-I, and Exhibit F attached hereto and by reference made a part hereof.

14. Except as otherwise provided below in this Section 14, all construction work performed hereunder by Agency for the Project will be pursuant to a contract or contracts to be let by Agency, and all such contracts must include the following:

(a) All work performed under such contract or contracts within the limits of BNSF's right-of-way must be performed in a good and workmanlike manner in accordance with plans and specifications approved by BNSF;

(b) Changes or modifications during construction that affect safety or BNSF operations must be subject to BNSF's approval;

(c) No work will be commenced within BNSF's right-of-way until each of the prime contractors employed in connection with said work must have (i) executed and delivered to BNSF an agreement in the form of Exhibit C-I, and (ii) delivered to and secured BNSF's approval of the required insurance; and

(d) To facilitate scheduling for the Project, Agency shall have its contractor give BNSF's representative Project Engineer (909-386-4079) four (4) weeks advance notice of the proposed times and dates for work windows. BNSF and Agency's contractor will establish mutually agreeable work windows for the Project. BNSF has the right at any time to revise or change the work windows, due to train operations or service obligations. BNSF will not be responsible for any additional costs and expenses resulting from a change in work windows. Additional costs and expenses resulting from a change in work windows shall be accounted for in the contractor's expenses for the Project.

(e) The plans and specifications for the Project must be in compliance with the Bridge Requirements set forth on Exhibit F, attached to this Agreement and incorporated herein.

15. Agency must advise the appropriate BNSF Manager of Public Projects, in writing, of the completion date of the Project within thirty (30) days after such completion date. Additionally, Agency must notify BNSF's Manager of Public Projects, in writing, of the date

on which Agency and/or its Contractor will meet with BNSF for the purpose of making final inspection of the Project.

16. **TO THE FULLEST EXTENT PERMITTED BY LAW, AGENCY HEREBY RELEASES, INDEMNIFIES, DEFENDS AND HOLDS HARMLESS BNSF, ITS AFFILIATED COMPANIES, PARTNERS, SUCCESSORS, ASSIGNS, LEGAL REPRESENTATIVES, OFFICERS, DIRECTORS, SHAREHOLDERS, EMPLOYEES AND AGENTS FOR, FROM AND AGAINST ANY AND ALL CLAIMS, LIABILITIES, FINES, PENALTIES, COSTS, DAMAGES, LOSSES, LIENS, CAUSES OF ACTION, SUITS, DEMANDS, JUDGMENTS AND EXPENSES (INCLUDING, WITHOUT LIMITATION, COURT COSTS AND ATTORNEYS' FEES) OF ANY NATURE, KIND OR DESCRIPTION OF ANY PERSON (INCLUDING, WITHOUT LIMITATION, THE EMPLOYEES OF THE PARTIES HERETO) OR ENTITY DIRECTLY OR INDIRECTLY ARISING OUT OF, RESULTING FROM OR RELATED TO (IN WHOLE OR IN PART) (I) THE USE, OCCUPANCY OR PRESENCE OF AGENCY, ITS CONTRACTORS, SUBCONTRACTORS, EMPLOYEES OR AGENTS IN, ON, OR ABOUT THE CONSTRUCTION SITE, (II) THE PERFORMANCE, OR FAILURE TO PERFORM BY THE AGENCY, ITS CONTRACTORS, SUBCONTRACTORS, EMPLOYEES, OR AGENTS, ITS WORK OR ANY OBLIGATION UNDER THIS AGREEMENT, (III) THE SOLE OR CONTRIBUTING ACTS OR OMISSIONS OF AGENCY, ITS CONTRACTORS, SUBCONTRACTORS, EMPLOYEES, OR AGENTS IN, ON, OR ABOUT THE CONSTRUCTION SITE, (IV) AGENCY'S BREACH OF THE TEMPORARY CONSTRUCTION LICENSE OR EASEMENT GRANTED TO AGENCY PURSUANT TO ARTICLE II OF THIS AGREEMENT, (V) ANY RIGHTS OR INTERESTS GRANTED TO AGENCY PURSUANT TO THE TEMPORARY CONSTRUCTION LICENSE OR EASEMENT DISCUSSED IN ARTICLE II OF THIS AGREEMENT, (VI) AGENCY'S OCCUPATION AND USE OF BNSF'S PROPERTY OR RIGHT-OF-WAY, INCLUDING, WITHOUT LIMITATION, SUBSEQUENT MAINTENANCE OF THE STRUCTURE BY AGENCY, OR (VII) AN ACT OR OMISSION OF AGENCY OR ITS OFFICERS, AGENTS, INVITEES, EMPLOYEES OR CONTRACTORS OR ANYONE DIRECTLY OR INDIRECTLY EMPLOYED BY ANY OF THEM, OR ANYONE THEY CONTROL OR EXERCISE CONTROL OVER. THE LIABILITY ASSUMED BY AGENCY WILL NOT BE AFFECTED BY THE FACT, IF IT IS A FACT, THAT THE DAMAGE, DESTRUCTION, INJURY OR DEATH WAS OCCASIONED BY OR CONTRIBUTED TO BY THE NEGLIGENCE OF BNSF, ITS AGENTS, SERVANTS, EMPLOYEES OR OTHERWISE, EXCEPT TO THE EXTENT THAT SUCH CLAIMS ARE PROXIMATELY CAUSED BY THE WILLFUL MISCONDUCT OR SOLE NEGLIGENCE OF BNSF.**

17. Agency must give BNSF's Manager of Public Projects written notice to proceed ("**Notice to Proceed**") with the railroad work after receipt of necessary funds for the Project. BNSF will not begin the railroad work (including, without limitation, procurement of supplies, equipment or materials) until written notice to proceed is received from Agency.

ARTICLE IV) JOINT OBLIGATIONS

IN CONSIDERATION of the premises, the parties hereto mutually agree to the following:

1. All work contemplated in this Agreement must be performed in a good and workmanlike manner and each portion must be promptly commenced by the party obligated hereunder to perform the same and thereafter diligently prosecuted to conclusion in its logical order and sequence. Furthermore, any changes or modifications during construction which affect BNSF will be subject to BNSF's written approval prior to the commencement of any such changes or modifications from Greg Rousseau.

2. The work hereunder must be done in accordance with the Bridge Requirements set forth on Exhibit F and the detailed plans and specifications approved by BNSF.

3. Agency must require its contractor(s) to reasonably adhere to the Project's construction schedule for all Project work. The parties hereto mutually agree that BNSF's failure to complete the railroad work in accordance with the construction schedule due to inclement weather or unforeseen railroad emergencies will not constitute a breach of this Agreement by BNSF and will not subject BNSF to any liability. Regardless of the requirements of the construction schedule, BNSF reserves the right to reallocate the labor forces assigned to complete the railroad work in the event of an emergency to provide for the immediate restoration of railroad operations of either (BNSF or its related railroads) or to protect persons or property on or near any BNSF owned property. BNSF will not be liable for any additional costs or expenses resulting from any such reallocation of its labor forces. The parties mutually agree that any reallocation of labor forces by BNSF pursuant to this provision and any direct or indirect consequences or costs resulting from any such reallocation will not constitute a breach of this Agreement by BNSF.

4. BNSF will have the right to stop construction work on the Project if any of the following events take place: (i) Agency (or any of its contractors) performs the Project work in a manner contrary to the plans and specifications approved by BNSF; (ii) Agency (or any of its contractors), in BNSF's opinion, prosecutes the Project work in a manner that is hazardous to BNSF property, facilities or the safe and expeditious movement of railroad traffic; (iii) the insurance described in the attached Exhibit C-1 is canceled during the course of the Project; or (iv) Agency fails to pay BNSF for the Temporary Construction License or the Easement pursuant to Article II, Section 1 of this Agreement. The work stoppage will continue until all necessary actions are taken by Agency or its contractor to rectify the situation to the satisfaction of BNSF's Division Engineer or until proof of additional insurance has been delivered to and accepted by BNSF. In the event of a breach of (i) this Agreement, (ii) the Temporary Construction License, or (iii) the Easement, BNSF may immediately terminate the Temporary Construction License or the Easement. Any such work stoppage under this provision will not give rise to any liability on the part of BNSF. BNSF's right to stop the work is in addition to any other rights BNSF may have including, but not limited to, actions or suits for damages or lost profits. In the event that BNSF desires to stop construction work on the Project, BNSF agrees to immediately notify the following individual in writing:

Brian Gengler
14343 Civic Drive 5001
Victorville, CA 92393
Phone: 760-955-5156
Fax: 760-955-5159

5. Agency must supervise and inspect the operations of all Agency contractors to ensure compliance with the plans and specifications approved by BNSF, the terms of this Agreement and all safety requirements of BNSF. If BNSF determines that proper supervision and inspection are not being performed by Agency personnel at any time during construction of the Project, BNSF has the right to stop construction (within or adjacent to its operating right-of-way). Construction of the Project will not proceed until Agency corrects the situation to BNSF's reasonable satisfaction. If BNSF feels the situation is not being corrected in an expeditious manner, BNSF will immediately notify:

Brian Gengler
14343 Civic Drive 5001
Victorville, CA 92393
Phone: 760-955-5156
Fax: 760-955-5159

for appropriate corrective action.

6. Pursuant to this section and Article II, Section 6 herein, Agency must reimburse BNSF in full for the actual costs of all work performed by BNSF under this Agreement (including taxes, such as applicable sales and use taxes, business and occupation taxes, and similar taxes).

In any action brought under this Agreement, the prevailing Party shall be entitled to recover its actual costs and attorneys fees pursuant to California Civil Code Section 1717, as well as other litigation costs, including expert witness fees. The prevailing Party shall also be entitled to recover all actual attorneys fees and litigation costs incurred in connection with the enforcement of a judgment arising from such action or proceeding.

7. All expenses detailed in statements sent to Agency pursuant to Article II, Section 6 herein will comply with the terms and provisions of the Title 23 U.S. Code, Title 23 Code of Federal Regulations, and the Federal-Aid Policy Guide, U.S. Department of Transportation, as amended from time to time, which manual is hereby incorporated into and made a part of this Agreement by reference. The parties mutually agree that BNSF's preliminary engineering, design, and contract preparation costs described in Article II,

Section 2 herein are part of the costs of the Project even though such work may have preceded the date of this Agreement.

8. The parties mutually agree that neither construction activities for the Project, nor future maintenance of the Structure once completed, will be permitted during the fourth quarter of each calendar year. Emergency work will be permitted only upon prior notification to BNSF's Network Operations Center (telephone number: 800 832-5452). The parties hereto mutually understand and agree that trains cannot be subjected to delay during this time period.

9. Subject to the restrictions imposed by Article IV, Section 8 above, the construction of the Project will not commence until Agency gives BNSF's Manager of Public Projects thirty (30) days prior written notice of such commencement. The commencement notice will reference D.O.T. Crossing No. 026086L and must state the time that construction activities will begin.

10. In addition to the terms and conditions set forth elsewhere in this Agreement, including, but not limited to, the terms and conditions stated in Exhibit F, BNSF and Agency agree to the following terms upon completion of construction of the Project:

(a) Agency will own and maintain, at its sole cost and expense, the Structure, the highway approaches, and appurtenances thereto, lighting, drainage and any access roadways to BNSF gates installed pursuant to this Agreement. BNSF may, at its option, perform maintenance on the Structure in order to avoid conflicts with train operations. BNSF will notify Agency prior to performing any such maintenance on the Structure. In the event such maintenance involves emergency repairs, BNSF will notify Agency at its earliest opportunity. Agency must fully reimburse BNSF for the costs of maintenance performed by BNSF pursuant to this subsection (a).

(b) Agency must, at Agency's sole cost and expense, keep the Structure painted and free from graffiti.

(c) Agency must provide BNSF with any and all necessary permits and maintain roadway traffic controls, at no cost to BNSF, whenever requested by BNSF to allow BNSF to inspect the Structure or to make emergency repairs thereto.

(d) It is expressly understood by Agency and BNSF that any right to install utilities will be governed by a separate permit or license agreement between the parties hereto.

(e) Agency must keep the Structure and surrounding areas clean and free from birds, pigeons, scavengers, vermin, creatures and other animals.

(f) If Agency (including its contractors and agents) or BNSF, on behalf of Agency, performs (i) alterations or modifications to the Structure, or (ii) any maintenance or other work on the Structure with heavy tools, equipment or machinery at ground surface level horizontally within 25'-0" of the centerline of the nearest track, or (iii) any maintenance or other work outside the limits of the deck of the Structure vertically above the top of the rail, then Agency or its contractors and/or agents must procure and maintain the following insurance coverage, which may be changed from time to time:

Railroad Protective Liability insurance naming only ***BNSF*** as the Insured with coverage of at least $5,000,000 per occurrence and $10,000,000 in the aggregate. The policy shall be issued on a standard ISO form CG 00 35 12 04 and include the following:

- Endorsed to include the Pollution Exclusion Amendment
- Endorsed to include the Limited Seepage and Pollution Endorsement.
- Endorsed to remove any exclusion for punitive damages.
- Endorsed to include Evacuation Expense Coverage Endorsement.
- No other endorsements restricting coverage may be added.
- The original policy must be provided to ***BNSF*** prior to performing any work or services under this Agreement
- Definition of "Physical Damage to Property" shall be endorsed to read: "means direct and accidental loss of or damage to all property owned by any named insured and all property in any named insured' care, custody, and control arising out of the acts or omissions of the contractor named on the Declarations.

As used in this paragraph, "***BNSF***" means "Burlington Northern Santa Fe, LLC", "BNSF RAILWAY COMPANY" and the subsidiaries, successors, assigns and affiliates of each.

In lieu of providing a Railroad Protective Liability Policy, Agency may participate in BNSF's Blanket Railroad Protective Liability Insurance Policy if available to Agency or its contractors. The limits of coverage are the same as above.

11. Agency hereby grants to BNSF, at no cost or expense to BNSF, a permanent right of access from Agency property to BNSF tracks for maintenance purposes.

12. Agency must provide one set of as built plans (prepared in **English Units)** to BNSF, as well as one set of computer diskettes containing as built CAD drawings of the Structure and identifying the software used for the CAD drawings. The "as built plans" must comply with the Bridge Requirements set forth on Exhibit F and depict all information in BNSF engineering stationing and mile post pluses. The "as built plans" must also include plan and profile, structural bridge drawings and specifications, and drainage plans. All improvements and facilities must be shown.

13. Subject to the restrictions imposed by Article IV, Section 8 above and in accordance with the requirements of Article III, Section 9 above, Agency must notify and obtain prior authorization from BNSF's Manager of Public Projects before entering BNSF's right-of-way for **INSPECTION OR MAINTENANCE** purposes, and the BNSF Manager of Public Projects will determine if flagging is required. If the construction work hereunder is contracted, Agency must require its prime contractor(s) to comply with the obligations set forth in Exhibit C and Exhibit C-1, as the same may be revised from time to time. Agency will be responsible for its contractor(s) compliance with such obligations.

14. In the event that BNSF shall deem it necessary or desirable in the future, in the performance of its duty as a common carrier, to raise or lower the grade or change the alignment of its tracks or to lay additional track or tracks or to build other facilities in connection with the operation of its railroad, BNSF shall, at its expense, have full right to make such changes or additions, provided such changes or additions do not change or alter the Structure herein proposed to be constructed and provided further, however, that should it become necessary or desirable in the future to change, alter, widen or reconstruct the Structure to accommodate railroad projects, the cost of such work, including any cost incidental to alteration of railroad or highway facilities made necessary by the alteration of the Structure shall be the sole responsibility of Agency.

15. Agency may, at Agency's sole expense, alter or reconstruct the highway components of the Structure if necessary or desirable, due to traffic conditions or pedestrian or other recreational traffic, provided, however, that any such alteration or reconstruction must receive BNSF's prior written approval as evidenced by either a supplement to this Agreement, or execution of a new agreement that provides for the termination of this Agreement. Furthermore, any alteration or reconstruction of the highway components of the Structure will be covered by a Commission Order.

16. Any books, papers, records and accounts of the parties hereto relating to the work hereunder or the costs or expenses for labor and material connected with the construction will at all reasonable times be open to inspection and audit by the agents and authorized representatives of the parties hereto, as well as the State of CA and the Federal Highway Administration, for a period of one (1) year from the date of the final BNSF invoice under this Agreement.

17. The covenants and provisions of this Agreement are binding upon and inure to the benefit of the successors and assigns of the parties hereto. Notwithstanding the preceding sentence, neither party hereto may assign any of its rights or obligations hereunder without the prior written consent of the other party.

18. In the event construction of the Project does not commence within 3 years of the Effective Date, this Agreement will become null and void.

19. Neither termination nor expiration of this Agreement will release either party from any liability or obligation under this Agreement, whether of indemnity or otherwise,

resulting from any acts, omissions or events happening prior to the date of termination or expiration.

20. To the maximum extent possible, each provision of this Agreement will be interpreted in such a manner as to be effective and valid under applicable law. If any provision of this Agreement is prohibited by, or held to be invalid under, applicable law, such provision will be ineffective solely to the extent of such prohibition or invalidity and the remainder of the provision will be enforceable.

21. This Agreement (including exhibits and other documents, manuals, etc. incorporated herein) is the full and complete agreement between BNSF and Agency with respect to the subject matter herein and supersedes any and all other prior agreements between the parties hereto.

22. Any notice provided for herein or concerning this Agreement must be in writing and will be deemed sufficiently given when sent by certified mail, return receipt requested, to the parties at the following addresses:

BNSF:

Manager of Public Projects
740 Carnegie Drive
San Bernardino, CA 92408
Phone: 909-386-4474

Agency:

Brian Gengler
14343 Civic Drive 5001
Victorville, CA 92393
Phone: 760-955-5156
Fax: 760-955-5159

IN WITNESS WHEREOF, the parties hereto have caused this Agreement to be executed and attested by its duly qualified and authorized officials as of the day and year first above written.

BNSF RAILWAY COMPANY

By: Craig Rasmussen

Printed Name: CRAIG RASMUSSEN

Title: AVP ENGINEERING SVS + STRUCTURES

CITY OF VICTORVILLE

By: Gloria Garcia
Gloria Garcia, Mayor

Date: 11-15-17

ATTEST:

By: Carolee Bates
Carolee Bates, City Clerk

Date: 11-15-17

APPROVED AS TO CONTENT:

By: Brian W. Gengler
Brian W. Gengler, City Engineer

Date: 11-8-2017

APPROVED AS TO FORM:
Green de Bortnowsky, LLP

By: _____
Andre de Bortnowsky, City Attorney

Date: 11/8/17

APPROVED:

_____
Chuck Buquet, Risk Manager

VVCA/0050-43/DOC/003-3.DOC
9/22/16 1215 law

OVERPASS AGREEMENT

FOR

THE WIDENING OF THE BEAR VALLEY OVERHEAD

EXHIBIT A

DRAWING OF THE STRUCTURE

DIST	COUNTY	ROUTE	POST MILES TOTAL PROJECT	SHEET No	TOTAL SHEETS
08	SB	CR		56	82

REGISTERED CIVIL ENGINEER DATE

PLANS APPROVAL DATE

REGISTERED PROFESSIONAL ENGINEER T. OSTERKAMP No. C46783 Exp. 6/30/17 CIVIL STATE OF CALIFORNIA

The State of California or its officers or agents shall not be responsible for the accuracy or completeness of scanned copies of this plan sheet.

DOKKEN ENGINEERING
110 BLUE RAVINE ROAD, SUITE 200
FOLSOM, CA 95630

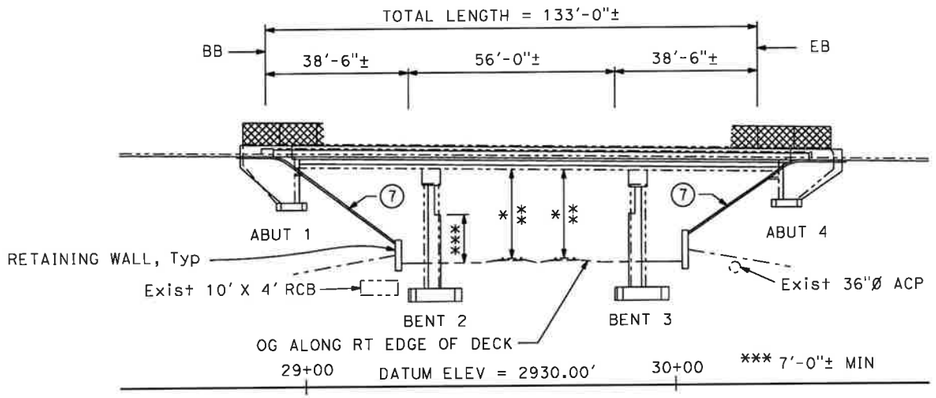

ELEVATION

1" = 20'

	WEST TRACK	EAST TRACK
* MIN VERT CLR TO WIDENING	24'-0"±	23'-5"±
** MIN VERT CLR TO EXISTING	22'-9¼"±	22'-3"±

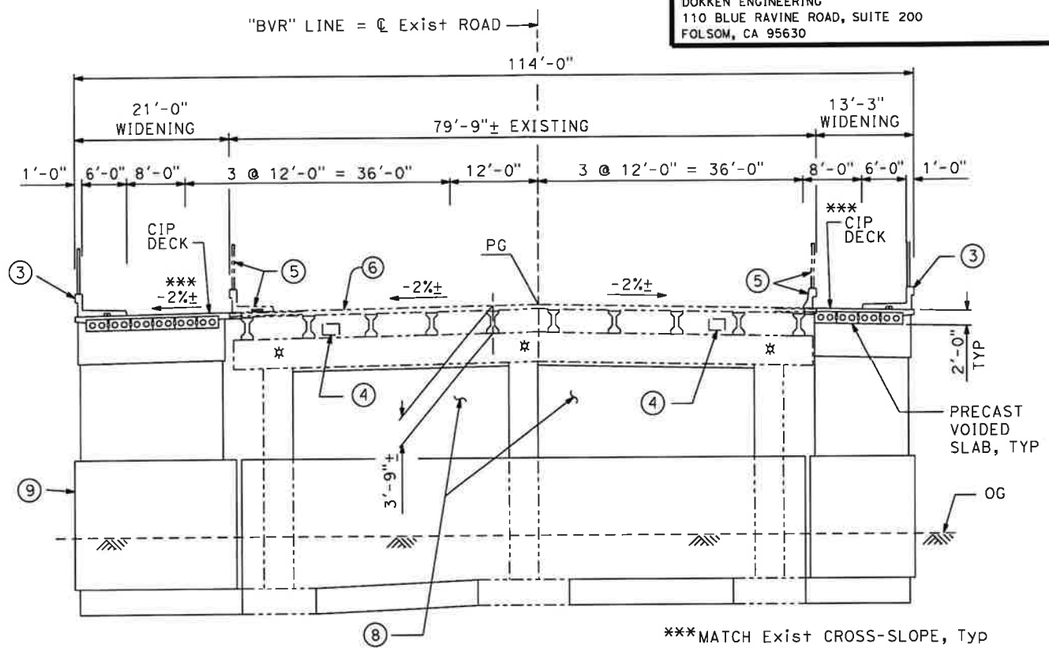

TYPICAL SECTION

1" = 10'

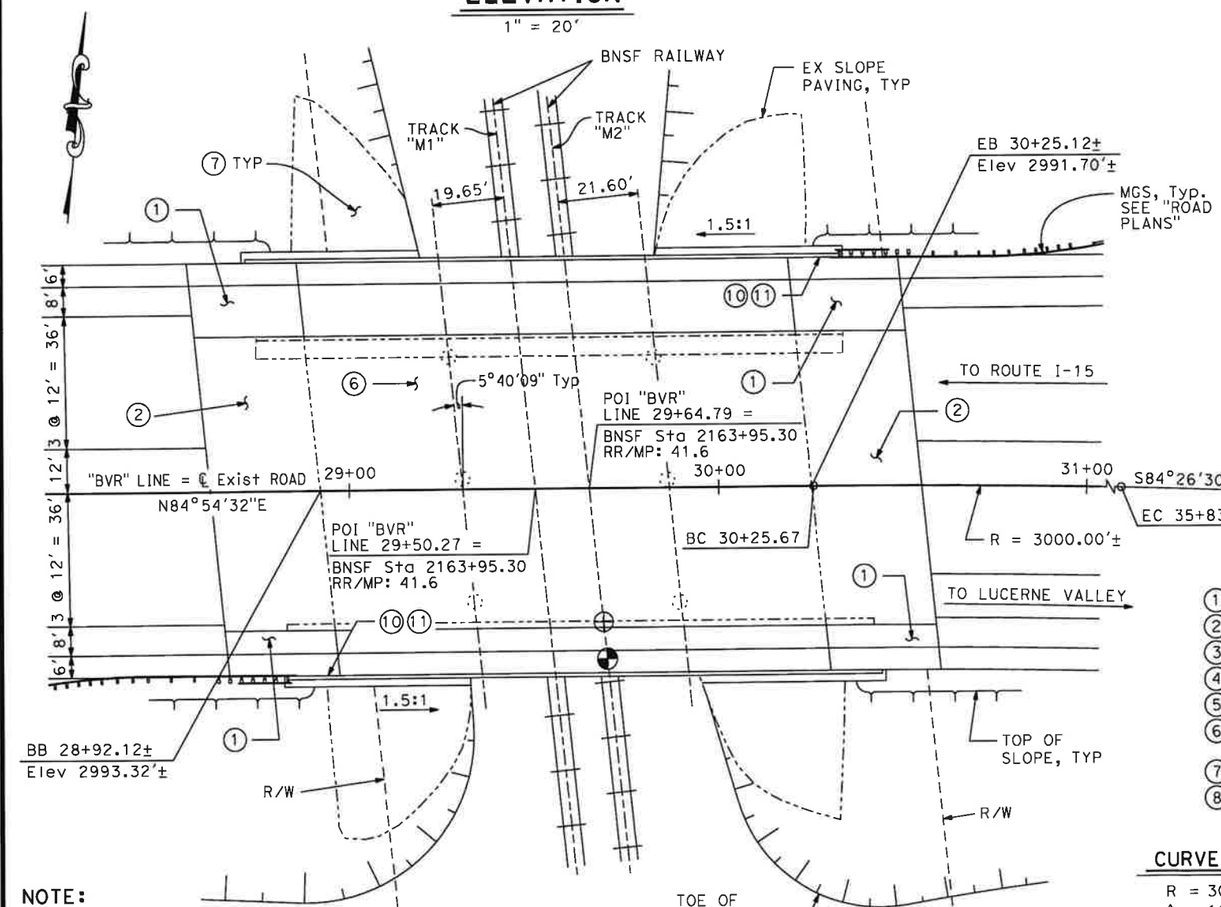

PLAN

1" = 20'

NOTE:

The contractor shall verify all controlling field dimensions before ordering or fabricating any material.

LEGEND:

1. STRUCTURE APPROACH TYPE N(30S)
2. STRUCTURE APPROACH TYPE R(30S)
3. CONCRETE BARRIER TYPE 732SW (MOD) W/ CHAIN LINK RAILING TYPE 7 (MOD)
4. 18" X 26" EX FUTURE UTILITY OPENING
5. REMOVE EX BARRIER, SIDEWALK AND RAILING
6. BRIDGE DECK METHACRYLATE RESIN TREATMENT, FOR LIMITS SEE "TYPICAL SECTION" SHEET
7. SLOPE PAVING, H=1.5 : V=1.0
8. INFILL WALLS
9. CRASH WALLS
10. PAINT "BEAR VALLEY ROAD OVERHEAD" & YEAR COMPLETED
11. PAINT "BRIDGE NO. 54C0547"

✲ RAILWAY TRACK LIGHTING FIXTURES (NEW)
◕ DENOTES POINT OF MIN VERT CLR TO WIDENING
⊕ DENOTES POINT OF MIN VERT CLR TO EXISTING
-------- DENOTES Exist STRUCTURE

CURVE DATA

R = 3000.00'
Δ = 10°38'58"
T = 279.61'
L = 557.60'

NOTES:

1. FOR "INDEX TO PLANS" AND "STANDARD PLANS", SEE "INDEX TO PLANS" SHEET.
2. FOR GENERAL NOTES, SEE "FOUNDATION PLAN" SHEET.

	BY	CHECKED
DESIGN	T. Osterkamp	M. Iley
DETAILS	R. Liptak	M. Iley
QUANTITIES	R. Liptak / F. Enriquez	M. Iley

LOAD & RESISTANCE FACTOR DESIGN — LIVE LOADING: HL93 W/"LOW-BOY"; PERMIT DESIGN VEHICLE
LAYOUT — BY — CHECKED
SPECIFICATIONS — BY — PLANS AND SPECS COMPARED

PREPARED FOR THE CITY OF VICTORVILLE

T. Osterkamp
PROJECT ENGINEER

BRIDGE NO. 54C0547
POST MILES

BEAR VALLEY ROAD OVERHEAD
GENERAL PLAN No. 1

DESIGN GENERAL PLAN SHEET (ENGLISH) (REV. 03/14/12)

ORIGINAL SCALE IN INCHES FOR REDUCED PLANS 0 1 2 3

UNIT:
PROJECT NUMBER & PHASE:
CONTRACT NO.:

DISREGARD PRINTS BEARING EARLIER REVISION DATES

REVISION DATES 1

SHEET 1 OF 27

FILE => J:\2007_Bear_Vly_BR_Widen\517\2007GP01.dgn

USERNAME => tmsToots DATE PLOTTED => 7/10/2017 TIME PLOTTED => 2:54:08 PM

OVERPASS AGREEMENT

FOR

THE WIDENING OF THE BEAR VALLEY OVERHEAD

EXHIBIT B

EASEMENT AGREEMENT

EASEMENT AGREEMENT

FOR _____

(Overpass Agreement)

THIS EASEMENT AGREEMENT FOR _____ ("**Easement Agreement**") is made and entered into as of the ____ day of _____ 20___ ("**Effective Date**"), by and between BNSF RAILWAY COMPANY, a Delaware corporation ("**Grantor**"), and _____, a _____ ("**Grantee**").

A. Grantor owns or controls certain real property situated at or near the vicinity of _____, County of _____, State of _____, at Mile Post _____, [Project # _____], as described or depicted on **Exhibit "A-1"** attached hereto and made a part hereof (the "**Premises**").

B. Grantor and Grantee have entered into that certain Overpass Agreement dated as of _____ concerning improvements on or near the Premises (the "**Overpass Agreement**").

C. Grantee has requested that Grantor grant to Grantee an easement over the Premises for the Easement Purpose (as defined below).

D. Grantor has agreed to grant Grantee such easement, subject to the terms and conditions set forth in this Easement Agreement.

NOW, THEREFORE, for and in consideration of the foregoing recitals which are incorporated herein, the mutual promises contained herein, and other good and valuable consideration, the receipt and sufficiency of which are hereby acknowledged, the parties agree as follows:

Section 1 Granting of Easement.

1.1 Easement Purpose. The "**Easement Purpose**" shall be for the purposes set forth in the OVERPASS Agreement. Any improvements to be constructed in connection with the Easement Purpose are referred to herein as "**Improvements**" and shall be constructed, located, configured and maintained by Grantee in strict accordance with the terms of this Easement Agreement and the OVERPASS Agreement.

1.2 Grant. Grantor does hereby grant unto Grantee a non-exclusive easement ("**Easement**") over the Premises for the Easement Purpose and for no other purpose. The Easement is granted subject to any and all

restrictions, covenants, easements, licenses, permits, leases and other encumbrances of whatsoever nature whether or not of record, if any, relating to the Premises and subject to all with all applicable federal, state and local laws, regulations, ordinances, restrictions, covenants and court or administrative decisions and orders, including Environmental Laws (defined below) and zoning laws (collectively, "**Laws**"). Grantor may not make any alterations or improvements or perform any maintenance or repair activities within the Premises except in accordance with the terms and conditions of the OVERPASS Agreement.

1.3 Reservations by Grantor. Grantor excepts and reserves the right, to be exercised by Grantor and any other parties who may obtain written permission or authority from Grantor:

(a) to install, construct, maintain, renew, repair, replace, use, operate, change, modify and relocate any existing pipe, power, communication, cable, or utility lines and appurtenances and other facilities or structures of like character (collectively, "**Lines**") upon, over, under or across the Premises;

(b) to install, construct, maintain, renew, repair, replace, use, operate, change, modify and relocate any tracks or additional facilities or structures upon, over, under or across the Premises; and

(c) to use the Premises in any manner as the Grantor in its sole discretion deems appropriate, provided Grantor uses all commercially reasonable efforts to avoid material interference with the use of the Premises by Grantee for the Easement Purpose.

Section 2 **Term of Easement**. The term of the Easement, unless sooner terminated under provisions of this Easement Agreement, shall be perpetual. [***If this is a temporary easement replace the preceding sentence with the following:*** The term of this Easement, unless sooner terminated under provisions of this Easement Agreement, shall expire on the date that is _____ after the Effective Date.]

Section 3 **No Warranty of Any Conditions of the Premises.** Grantee acknowledges that Grantor has made no representation whatsoever to Grantee concerning the state or condition of the Premises, or any personal property located thereon, or the nature or extent of Grantor's ownership interest in the Premises. Grantee has not relied on any statement or declaration of Grantor, oral or in writing, as an inducement to entering into this Easement Agreement, other than as set forth herein. GRANTOR HEREBY DISCLAIMS ANY REPRESENTATION OR WARRANTY, WHETHER EXPRESS OR IMPLIED, AS TO THE DESIGN OR CONDITION OF ANY PROPERTY PRESENT ON OR CONSTITUTING THE PREMISES, ITS MERCHANTABILITY OR FITNESS FOR ANY PARTICULAR PURPOSE, THE

QUALITY OF THE MATERIAL OR WORKMANSHIP OF ANY SUCH PROPERTY, OR THE CONFORMITY OF ANY SUCH PROPERTY TO ITS INTENDED USES. GRANTOR SHALL NOT BE RESPONSIBLE TO GRANTEE OR ANY OF GRANTEE'S CONTRACTORS FOR ANY DAMAGES RELATING TO THE DESIGN, CONDITION, QUALITY, SAFETY, MERCHANTABILITY OR FITNESS FOR ANY PARTICULAR PURPOSE OF ANY PROPERTY PRESENT ON OR CONSTITUTING THE PREMISES, OR THE CONFORMITY OF ANY SUCH PROPERTY TO ITS INTENDED USES. GRANTEE ACCEPTS ALL RIGHTS GRANTED UNDER THIS EASEMENT AGREEMENT IN THE PREMISES IN AN "AS IS, WHERE IS" AND "WITH ALL FAULTS" CONDITION, AND SUBJECT TO ALL LIMITATIONS ON GRANTOR'S RIGHTS, INTERESTS AND TITLE TO THE PREMISES. Grantee has inspected or will inspect the Premises, and enters upon Grantor's rail corridor and property with knowledge of its physical condition and the danger inherent in Grantor's rail operations on or near the Premises. Grantee acknowledges that this Easement Agreement does not contain any implied warranties that Grantee or Grantee's Contractors (as hereinafter defined) can successfully construct or operate the Improvements.

Section 4 **Nature of Grantor's Interest in the Premises.** GRANTOR DOES NOT WARRANT ITS TITLE TO THE PREMISES NOR UNDERTAKE TO DEFEND GRANTEE IN THE PEACEABLE POSSESSION OR USE THEREOF. NO COVENANT OF QUIET ENJOYMENT IS MADE. In case of the eviction of Grantee by anyone owning or claiming title to or any interest in the Premises, or by the abandonment by Grantor of the affected rail corridor, Grantor shall not be liable to refund Grantee any compensation paid hereunder.

Section 5 **Improvements.** Grantee shall take, in a timely manner, all actions necessary and proper to the lawful establishment, construction, operation, and maintenance of the Improvements, including such actions as may be necessary to obtain any required permits, approvals or authorizations from applicable governmental authorities. Any and all cuts and fills, excavations or embankments necessary in the construction, maintenance, or future alteration of the Improvements shall be made and maintained in such manner, form and extent as will provide adequate drainage of and from the adjoining lands and premises of the Grantor; and wherever any such fill or embankment shall or may obstruct the natural and pre-existing drainage from such lands and premises of the Grantor, the Grantee shall construct and maintain such culverts or drains as may be requisite to preserve such natural and pre-existing drainage, and shall also wherever necessary, construct extensions of existing drains, culverts or ditches through or along the premises of the Grantor, such extensions to be of adequate sectional dimensions to preserve the present flowage of drainage or other waters, and of materials and workmanship equally as good as those now existing. In the event any construction, repair, maintenance, work or other use of the Premises by Grantee will affect any Lines, fences, buildings, improvements or other facilities (collectively, "**Other Improvements**"), Grantee will be responsible at Grantee's sole risk to locate and make any adjustments necessary to such Other Improvements. Grantee must contact the owner(s) of the Other Improvements notifying them of any work that may damage these Other Improvements and/or interfere with their service and obtain

the owner's written approval prior to so affecting the Other Improvements. Grantee must mark all Other Improvements on the Plans and Specifications and mark such Other Improvements in the field in order to verify their locations. Grantee must also use all reasonable methods when working on or near Grantor property to determine if any Other Improvements (fiber optic, cable, communication or otherwise) may exist. The Grantee agrees to keep the above-described premises free and clear from combustible materials and to cut and remove or cause to be cut and removed at its sole expense all weeds and vegetation on said premises, said work of cutting and removal to be done at such times and with such frequency as to comply with Grantee and local laws and regulations and abate any and all hazard of fire.

Section 6 **Taxes and Recording Fees**. Grantee shall pay when due any taxes, assessments or other charges (collectively, "**Taxes**") levied or assessed upon the Improvements by any governmental or quasi-governmental body or any Taxes levied or assessed against Grantor or the Premises that are attributable to the Improvements. Grantee agrees to purchase, affix and cancel any and all documentary stamps in the amount prescribed by statute, and to pay any and all required transfer taxes, excise taxes and any and all fees incidental to recordation of the Memorandum of Easement. In the event of Grantee's failure to do so, if Grantor shall become obligated to do so, Grantee shall be liable for all costs, expenses and judgments to or against Grantor, including all of Grantor's legal fees and expenses.

Section 7 **Environmental.**

7.1 Compliance with Environmental Laws. Grantee shall strictly comply with all federal, state and local environmental Laws in its use of the Premises, including, but not limited to, the Resource Conservation and Recovery Act, as amended (RCRA), the Clean Water Act, the Oil Pollution Act, the Hazardous Materials Transportation Act, the Comprehensive Environmental Response, Compensation and Liability Act (CERCLA) and the Toxic Substances Control Act (collectively referred to as the "**Environmental Laws**"). Grantee shall not maintain a "treatment," "storage," "transfer" or "disposal" facility, or "underground storage tank," as those terms are defined by Environmental Laws, on the Premises. Grantee shall not handle, transport, release or suffer the release of "hazardous waste" or "hazardous substances", as "hazardous waste" and "hazardous substances" may now or in the future be defined by any Environmental Laws.

7.2 Notice of Release. Grantee shall give Grantor immediate notice to Grantor's Resource Operations Center at (800) 832-5452 of any release of hazardous substances on or from the Premises, violation of Environmental Laws, or inspection or inquiry by governmental authorities charged with enforcing Environmental Laws with respect to Grantee's use of the Premises. Grantee shall use its best efforts to promptly respond to any release on or from the Premises. Grantee also shall give Grantor immediate notice of all measures undertaken on behalf of Grantee to investigate, remediate, respond to or otherwise cure such release or violation.

7.3 Remediation of Release. In the event that Grantor has notice from Grantee or otherwise of a release or violation of Environmental Laws which occurred or may occur during the term of this Easement Agreement, Grantor may require Grantee, at Grantee's sole risk and expense, to take timely measures to investigate, remediate, respond to or otherwise cure such release or violation affecting the Premises. If during the construction or subsequent maintenance of the Improvements, soils or other materials considered to be environmentally contaminated are exposed, Grantee will remove and safely dispose of said contaminated soils. Determination of soils contamination and applicable disposal procedures thereof, will be made only by an agency having the capacity and authority to make such a determination.

7.4 Preventative Measures. Grantee shall promptly report to Grantor in writing any conditions or activities upon the Premises known to Grantee which create a risk of harm to persons, property or the environment and shall take whatever action is necessary to prevent injury to persons or property arising out of such conditions or activities; provided, however, that Grantee's reporting to Grantor shall not relieve Grantee of any obligation whatsoever imposed on it by this Easement Agreement. Grantee shall promptly respond to Grantor's request for information regarding said conditions or activities.

7.5 Evidence of Compliance. Grantee agrees periodically to furnish Grantor with proof satisfactory to Grantor that Grantee is in compliance with this **Section 7**. Should Grantee not comply fully with the above-stated obligations of this **Section 7**, notwithstanding anything contained in any other provision hereof, Grantor may, at its option, terminate this Easement Agreement by serving five (5) days' notice of termination upon Grantee. Upon termination, Grantee shall remove the Improvements and restore the Premises as provided in **Section 9**.

Section 8 Default and Termination.

8.1 Grantor's Performance Rights. If at any time Grantee, or Grantee's Contractors, fails to properly perform its obligations under this Easement Agreement, Grantor, in its sole discretion, may: (i) seek specific performance of the unperformed obligations, or (ii) at Grantee's sole cost, may arrange for the performance of such work as Grantor deems necessary for the safety of its rail operations, activities and property, or to avoid or remove any interference with the activities or property of Grantor, or anyone or anything present on the rail corridor or property with the authority or permission of Grantor. Grantee shall promptly reimburse Grantor for all costs of work performed on Grantee's behalf upon receipt of an invoice for such costs. Grantor's failure to perform any obligations of Grantee or Grantee's Contractors shall not alter the liability allocation set forth in this Easement Agreement.

8.2 Abandonment. Grantor may, at its option, terminate this Easement Agreement by serving five (5) days' notice in writing upon Grantee if Grantee should abandon or cease to use the Premises for the Easement Purpose. Any waiver by Grantor of any default or defaults shall not constitute a waiver of the right to terminate

this Easement Agreement for any subsequent default or defaults, nor shall any such waiver in any way affect Grantor's ability to enforce any section of this Easement Agreement.

8.3 Effect of Termination or Expiration. Neither termination nor expiration will release Grantee from any liability or obligation under this Easement, whether of indemnity or otherwise, resulting from any acts, omissions or events happening prior to the date of termination or expiration, or, if later, the date the Premises are restored as required by **Section 9**.

8.4 Non-exclusive Remedies. The remedies set forth in this **Section 8** shall be in addition to, and not in limitation of, any other remedies that Grantor may have under the OVERPASS Agreement, at law or in equity.

Section 9 Surrender of Premises.

9.1 Removal of Improvements and Restoration. Upon termination of this Easement Agreement, whether by abandonment of the Easement or by the exercise of Grantor's termination rights hereunder, Grantee shall, at its sole cost and expense, immediately perform **the following:**

(a) remove all or such portion of Grantee's Improvements and all appurtenances thereto from the Premises, as Grantor directs at Grantor's sole discretion;

(b) repair and restore any damage to the Premises arising from, growing out of, or connected with Grantee's use of the Premises;

(c) remedy any unsafe conditions on the Premises created or aggravated by Grantee; and

(d) leave the Premises in the condition which existed as of the Effective Date.

9.2 Limited License for Entry. If this Easement Agreement is terminated, Grantor may direct Grantee to undertake one or more of the actions set forth above, at Grantee's sole cost, in which case Grantee shall have a limited license to enter upon the Premises to the extent necessary to undertake the actions directed by Grantor. The terms of this limited license include all of Grantee's obligations under this Easement Agreement. Termination will not release Grantee from any liability or obligation under this Easement Agreement, whether of indemnity or otherwise, resulting from any acts, omissions or events happening prior to the date of termination, or, if later, the date when Grantee's Improvements are removed and the Premises are restored to the condition that existed as of the Effective Date. If Grantee fails to surrender the Premises to Grantor upon any termination of the Easement, all liabilities and obligations of Grantee

hereunder shall continue in effect until the Premises are surrendered.

Section 10 **Liens**. Grantee shall promptly pay and discharge any and all liens arising out of any construction, alterations or repairs done, suffered or permitted to be done by Grantee on the Premises or attributable to Taxes that are the responsibility of Grantee pursuant to **Section 6**. Grantor is hereby authorized to post any notices or take any other action upon or with respect to the Premises that is or may be permitted by Law to prevent the attachment of any such liens to any portion of the Premises; provided, however, that failure of Grantor to take any such action shall not relieve Grantee of any obligation or liability under this **Section 10** or any other section of this Easement Agreement.

Section 11 **Tax Exchange**. Grantor may assign its rights (but not its obligations) under this Easement Agreement to Goldfinch Exchange Company LLC, an exchange intermediary, in order for Grantor to effect an exchange under Section 1031 of the Internal Revenue Code. In such event, Grantor shall provide Grantee with a Notice of Assignment, attached as Exhibit C, and Grantee shall execute an acknowledgement of receipt of such notice.

Section 12 **Notices**. Any notice required or permitted to be given hereunder by one party to the other shall be delivered in the manner set forth in the OVERPASS Agreement. Notices to Grantor under this Easement shall be delivered to the following address: BNSF Railway Company, Real Estate Department, 2500 Lou Menk Drive, Ft. Worth, TX 76131, Attn: Permits, or such other address as Grantor may from time to time direct by notice to Grantee.

Section 13 **Recordation**. It is understood and agreed that this Easement Agreement shall not be in recordable form and shall not be placed on public record and any such recording shall be a breach of this Easement Agreement. Grantor and Grantee shall execute a Memorandum of Easement in the form attached hereto as **Exhibit "B-1"** (the "**Memorandum of Easement**") subject to changes required, if any, to conform such form to local recording requirements. [*IF LEGAL DESCRIPTION IS NOT AVAILABLE USE THE FOLLOWING IN PLACE OF THE PRIOR SENTENCE: As of the Effective Date, a legal description of the Premises is not available. Grantee and Grantor shall work together in good faith to establish the legal description for the Premises. Once Grantor and Grantee have approved the legal description, Grantor and Grantee shall execute a Memorandum of Easement in the form attached hereto as* ***Exhibit "B-1"*** *(the "**Memorandum of Easement**").]* The Memorandum of Easement shall be recorded in the real estate records in the county where the Premises are located. If a Memorandum of Easement is not executed by the parties and recorded as described above within ____ days of the Effective Date, Grantor shall have the right to terminate this Easement Agreement upon notice to Grantee.

Section 14 **Miscellaneous**.

14.1 All questions concerning the interpretation or application of provisions of

this Easement Agreement shall be decided according to the substantive Laws of the State of **[Texas]** without regard to conflicts of law provisions.

14.2 In the event that Grantee consists of two or more parties, all the covenants and agreements of Grantee herein contained shall be the joint and several covenants and agreements of such parties. This instrument and all of the terms, covenants and provisions hereof shall inure to the benefit of and be binding upon each of the parties hereto and their respective legal representatives, successors and assigns and shall run with and be binding upon the Premises.

14.3 If any action at law or in equity is necessary to enforce or interpret the terms of this Easement Agreement, the prevailing party or parties shall be entitled to reasonable attorneys' fees, costs and necessary disbursements in addition to any other relief to which such party or parties may be entitled.

14.4 If any provision of this Easement Agreement is held to be illegal, invalid or unenforceable under present or future Laws, such provision will be fully severable and this Easement Agreement will be construed and enforced as if such illegal, invalid or unenforceable provision is not a part hereof, and the remaining provisions hereof will remain in full force and effect. In lieu of any illegal, invalid or unenforceable provision herein, there will be added automatically as a part of this Easement Agreement a provision as similar in its terms to such illegal, invalid or unenforceable provision as may be possible and be legal, valid and enforceable.

14.5 This Easement Agreement is the full and complete agreement between Grantor and Grantee with respect to all matters relating to Grantee's use of the Premises, and supersedes any and all other agreements between the parties hereto relating to Grantee's use of the Premises as described herein. However, nothing herein is intended to terminate any surviving obligation of Grantee or Grantee's obligation to defend and hold Grantor harmless in any prior written agreement between the parties.

14.6 Time is of the essence for the performance of this Easement Agreement.

Section 15 Administrative Fee.

15.1 Grantee acknowledges that a material consideration for this agreement, without which it would not be made, is the agreement between Grantee and Grantor, that the Grantee shall pay upon return of this Agreement signed by Grantee to Grantor's Broker a processing fee in the amount of **$2,000.00** over and above the agreed upon Acquisition Price. Said fee shall be made payable to BNSF Railway Company by a separate check.

[Signature page follows]

Witness the execution of this Easement Agreement as of the date first set forth above.

GRANTOR:

BNSF RAILWAY COMPANY, a Delaware corporation

By: _____
Name: _____
Title: _____

GRANTEE:

_____
__,
a
_____
_

By: _____
Name: _____
Title: _____

EXHIBIT "A-1"

Premises

MEMORANDUM OF EASEMENT

THIS MEMORANDUM OF EASEMENT is hereby executed this 29th day of March, 2018, by and between **BNSF RAILWAY COMPANY**, a Delaware corporation ("**Grantor**"), whose address for purposes of this instrument is 2500 Lou Menk Drive, Fort Worth, Texas 76131, and the **CITY OF VICTORVILLE**, a political subdivision of the State of California ("**Grantee**"), whose address for purposes of this instrument is 14343 Civic Dr. 5001, Victorville, CA 92393, which terms "Grantor" and "Grantee" shall include, wherever the context permits or requires, singular or plural, and the heirs, legal representatives, successors and assigns of the respective parties:

WITNESSETH:

WHEREAS, Grantor owns or controls certain real property situated in San Bernardino County, California, as described on **Exhibit "B" (Footing Easement) and Exhibit "F" (Slope Easement)** attached hereto and incorporated herein by reference (the "**Premises**');

WHEREAS, Grantor and Grantee entered into an Easement Agreement, dated 29th day of March, 2018 (the "**Easement Agreement**") which set forth, among other things, the terms of an easement granted by Grantor to Grantee over and across the Premises (the "**Easement**"); and

WHEREAS, Grantor and Grantee desire to memorialize the terms and conditions of the Easement Agreement of record.

For valuable consideration the receipt and sufficiency of which are hereby acknowledged, Grantor does grant unto Grantee and Grantee does hereby accept from Grantor the Easement over and across the Premises.

The term of the Easement, unless sooner terminated under provisions of the Easement Agreement, shall be perpetual.

All the terms, conditions, provisions and covenants of the Easement Agreement are incorporated herein by this reference for all purposes as though written out at length herein, and both the Easement Agreement and this Memorandum of Easement shall be deemed to constitute a single instrument or document. This Memorandum of Easement is not intended to amend, modify, supplement, or supersede any of the provisions of the Easement Agreement and, to the extent there may be any conflict or inconsistency between the Easement Agreement or this Memorandum of Easement, the Easement Agreement shall control.

IN WITNESS WHEREOF, Grantor and Grantee have executed this Memorandum of Easement to as of the date and year first above written.

GRANTOR:

BNSF RAILWAY COMPANY, a Delaware corporation

By: _____
Name: Mark D. Ude
Title: AVP Corporate Real Estate Development

STATE OF TEXAS §
§
COUNTY OF TARRANT §

This instrument was acknowledged before me on the 29th day of March, 2018, by Mark D. Ude as AVP Corporate Real Estate Development of **BNSF RAILWAY COMPANY**, a Delaware corporation.

_____
Notary Public

My appointment expires: Feb 17, 2019

(Seal)

NOTARY PUBLIC STATE OF TEXAS
CATHY T BENTON
Notary ID # 5532257
My Commission Expires
February 17, 2019

GRANTEE:
CITY OF VICTORVILLE

By: Gloria Garcia
Name: Gloria Garcia
Title: Mayor

STATE OF _____ §
§
COUNTY OF _____ §

This instrument was acknowledged before me on the _____ day of _____, 201_, by _____ (name) as _____(title) of _____, a _____.

See Attached Acknowledgment

_____
Notary Public

My appointment expires:_____

(Seal)

ACKNOWLEDGMENT

A notary public or other officer completing this certificate verifies only the identity of the individual who signed the document to which this certificate is attached, and not the truthfulness, accuracy, or validity of that document.

State of California
County of San Bernardino)

On 2/13/18 before me, Heidi Roche, Notary Public
(insert name and title of the officer)

personally appeared Gloria Garcia,
who proved to me on the basis of satisfactory evidence to be the person(s) whose name(s) is/are subscribed to the within instrument and acknowledged to me that he/she/they executed the same in his/her/their authorized capacity(ies), and that by his/her/their signature(s) on the instrument the person(s), or the entity upon behalf of which the person(s) acted, executed the instrument.

I certify under PENALTY OF PERJURY under the laws of the State of California that the foregoing paragraph is true and correct.

WITNESS my hand and official seal.

Heidi Roche
COMM. #2164650
NOTARY PUBLIC - CALIFORNIA
SAN BERNARDINO COUNTY
My Comm. Expires Oct. 11, 2020

Signature Heidi Roche (Seal)

EXHIBIT "B"

CITY OF VICTORVILLE
Footing Easement

Legal Description:

All that real property located within the southeast one quarter of Section 34, Township 5 North, Range 4 West San Bernardino Meridian, in the County of San Bernardino, State of California, more particularly described by metes and bounds as follows;

Parcel 1

Commencing at the southeast corner of that tract of land conveyed to the County of San Bernardino as PARCEL NO. 1 of GRANT DEED recorded April 26, 1978 in Book 9419 at Page 1275, Official Records of said County, said point also being the intersection of the south line of said Section 34 with the west line of the Atchison, Topeka and Santa Fe Railway right of way as described in document recorded November 3, 1903, in Book 339 of Deeds, page 168, Records of said County; Thence N11°11'10"W 39.95' along said west line; Thence departing from said west line N78°48'50"E 118.11' to the TRUE POINT OF BEGINNING;

Thence from said TRUE POINT OF BEGINNING N10°45'37"W 118.58';
Thence N79°14'23"E 10.00';
Thence S10°45'37"E 118.58';
Thence S79°14'23"W 10.00' to the TRUE POINT OF BEGINNING.

Containing 1,186 square feet more or less.

All as shown on EXHIBIT "B" attached hereto and by this reference made a part hereof.

Prepared by me or under my direction.

TERRY FLETCHER LS 5834
My Registration Expires 09-30-2018

2/8/2017
DATE

LICENSED LAND SURVEYOR
TERRY FLETCHER
No. 5834
Exp. 9-30-18
STATE OF CALIFORNIA

EXHIBIT "B"

Footing Easement

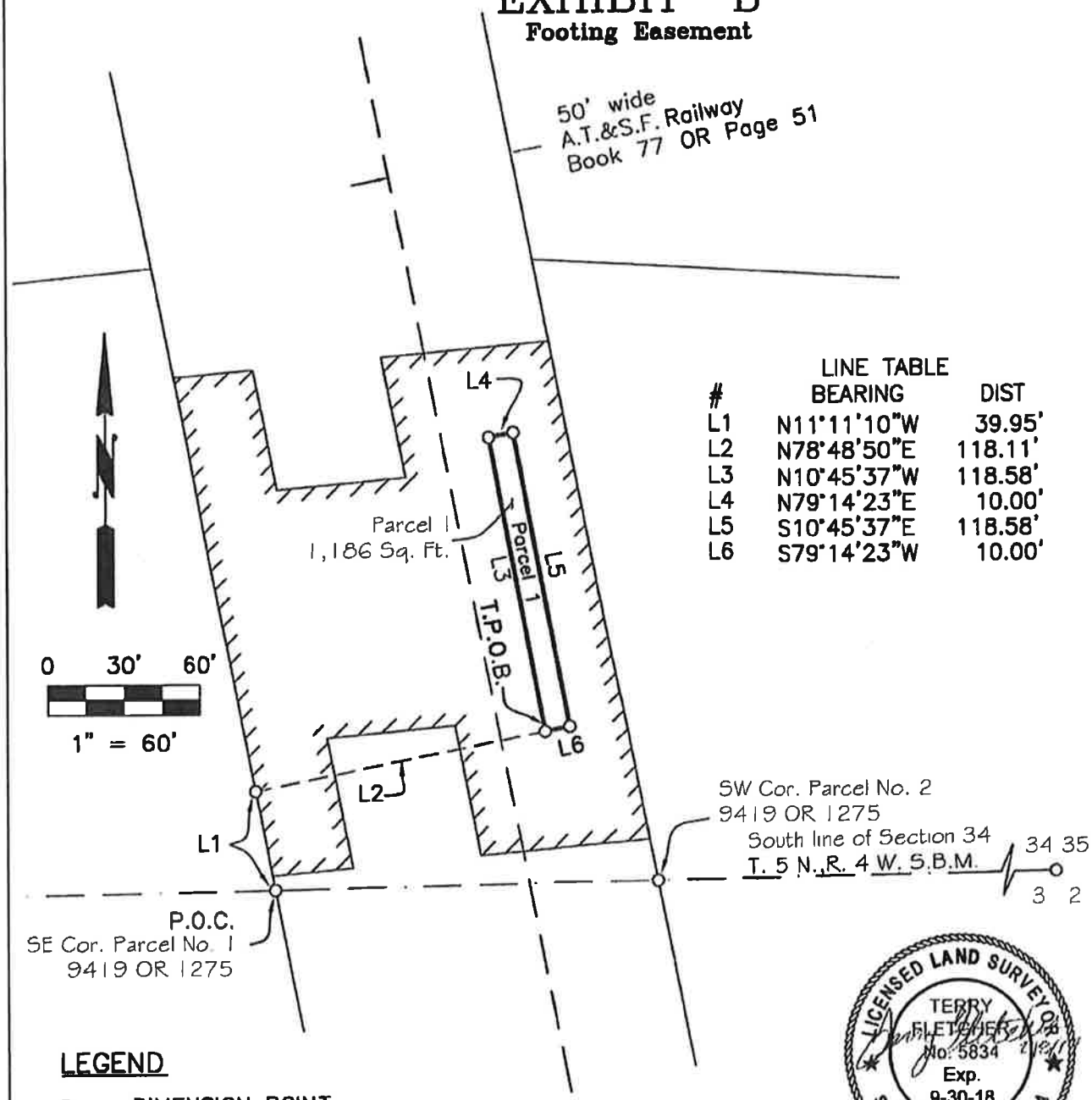

LINE TABLE

#	BEARING	DIST
L1	N11°11'10"W	39.95'
L2	N78°48'50"E	118.11'
L3	N10°45'37"W	118.58'
L4	N79°14'23"E	10.00'
L5	S10°45'37"E	118.58'
L6	S79°14'23"W	10.00'

LICENSED LAND SURVEYOR
TERRY FLETCHER
No. 5834
Exp. 9-30-18
STATE OF CALIFORNIA

LEGEND

o DIMENSION POINT
P.O.C. POINT OF COMMENCING
T.P.O.B. TRUE POINT OF BEGINNING

EXISTING AGREEMENT BETWEEN A.T.S.F RAILWAY COMPANY AND THE COUNTY OF SAN BERNARDINO AS SHOWN ON EXHIBIT 'A', SAN BERNARDINO COUNTY RESOLUTION NO. R-76-24, DATED FEBRUARY 9, 1976

DOKKEN ENGINEERING 110 BLUE RAVINE ROAD, SUITE 200 FOLSOM, CA 95630 (916)858-0642	BEAR VALLEY ROAD CITY OF VICTORVILLE COUNTY OF SAN BERNARDINO STATE OF CALIFORNIA	DATE: 11/7/16 APN: ---- DE NO. 1
	CHECKED BY: / PREPARED BY: TF	SHEET 1 OF 1
Atchison Topeka and Santa Fe Railway Co.		

J:\2007_Bear_Vly_BR_Widen\400\460_RofW_Engr\TFRW\2007.dwg

EXHIBIT "F"

CITY OF VICTORVILLE
Slope Easements

Legal Description:

All that real property located within the southeast one quarter of Section 34, Township 5 North, Range 4 West and the northeast one-quarter of Section 3, Township 4 North, Range 4 West San Bernardino Meridian, in the County of San Bernardino, State of California, more particularly described by metes and bounds as follows;

Parcel 1

Beginning at the southwest corner of that tract of land conveyed to the County of San Bernardino as PARCEL NO. 2 of GRANT DEED recorded April 26, 1978 in Book 9419 at Page 1275, Official Records of said County, said point also being the intersection of the south line of said Section 34 with the east line of the Atchison, Topeka and Santa Fe Railway right of way as described in Book 77 Official Records Page 51, Records of said County and being the TRUE POINT OF BEGINNING;

Thence from said TRUE POINT OF BEGINNING S11°11'10"E 13.48' along said east line;

Thence departing from said east line S84°54'32"W 50.28' to a point on the west line of said right of way;

Thence N11°11'10"W 30.17' along said west line;

Thence N84°54'32"E 50.28' to a point on the east line of the Atchison, Topeka and Santa Fe Railway right of way;

Thence S11°11'10"E 16.69' along said east line to the TRUE POINT OF BEGINNING.

Containing 1,508 square feet more or less.

All as shown on EXHIBIT "F" attached hereto and by this reference made a part hereof.

Parcel 2

Commencing at the southwest corner of that tract of land conveyed to the County of San Bernardino as PARCEL NO. 2 of GRANT DEED recorded April 26, 1978 in Book 9419 at Page 1275, Official Records of said County, said point also being the intersection of the south line of said Section 34 with the east line of the Atchison, Topeka and Santa Fe Railway right of way as described in Book 77 Official Records Page 51, Records of said County; Thence N11°11'10"W 217.82' along said east line to the TRUE POINT OF BEGINNING;

Thence from said TRUE POINT OF BEGINNING along said east line N11°11'10"W 56.32';

Thence departing from said east line S84°54'32"W 50.28' to a point on west line of said right of way;

Thence S11°11'10"E 56.32' along said west line;

Thence N84°54'32"E 50.28' to the TRUE POINT OF BEGINNING.

Containing 2,816 square feet more or less.

All as shown on EXHIBIT "F" attached hereto and by this reference made a part hereof.

Prepared by me or under my direction.

Terry Fletcher

TERRY FLETCHER LS 5834
My Registration Expires 09-30-2018

3/22/2018
DATE

LICENSED LAND SURVEYOR
TERRY FLETCHER
No. 5834
Exp. 9-30-18
STATE OF CALIFORNIA

EXHIBIT "F"

Slope Easements

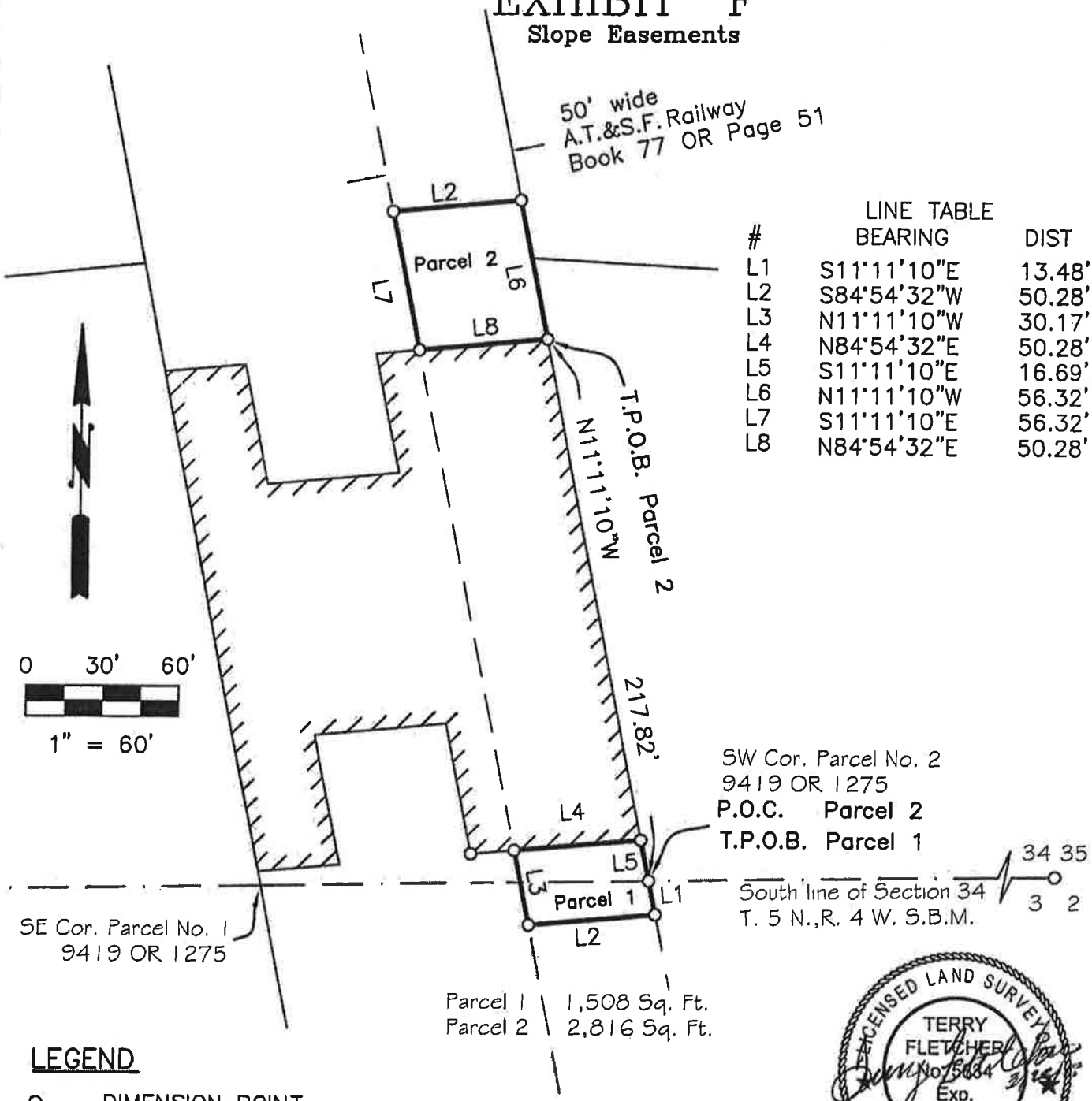

LINE TABLE

#	BEARING	DIST
L1	S11°11'10"E	13.48'
L2	S84°54'32"W	50.28'
L3	N11°11'10"W	30.17'
L4	N84°54'32"E	50.28'
L5	S11°11'10"E	16.69'
L6	N11°11'10"W	56.32'
L7	S11°11'10"E	56.32'
L8	N84°54'32"E	50.28'

LICENSED LAND SURVEYOR
TERRY FLETCHER
No. 7664
Exp. 9-30-18
STATE OF CALIFORNIA

LEGEND

o DIMENSION POINT
P.O.C. POINT OF COMMENCING
T.P.O.B. TRUE POINT OF BEGINNING

EXISTING AGREEMENT BETWEEN A.T.S.F RAILWAY COMPANY AND THE COUNTY OF SAN BERNARDINO AS SHOWN ON EXHIBIT 'A', SAN BERNARDINO COUNTY RESOLUTION NO. R-76-24, DATED FEBRUARY 9, 1976

DOKKEN ENGINEERING 110 BLUE RAVINE ROAD, SUITE 200 FOLSOM, CA 95630 (916)858-0642	**BEAR VALLEY ROAD** CITY OF VICTORVILLE COUNTY OF SAN BERNARDINO STATE OF CALIFORNIA	DATE: 3/22/18 APN: ---- DE NO. 1
	CHECKED BY: PREPARED BY: TF	SHEET 1 OF 1
Atchison Topeka and Santa Fe Railway Co.		

J:\2007_Bear_Vly_BR_Widen\400\460_RofW_Engr\TFRW\2007.dwg

OVERPASS AGREEMENT

FOR

THE WIDENING OF THE BEAR VALLEY OVERHEAD

EXHIBIT C/C1

CONTRACTOR REQUIREMENTS
AND
AGREEMENT BETWEEN BNSF RAILWAY AND THE CONTRACTOR

EXHIBIT "C"

CONTRACTOR REQUIREMENTS

1.01 General:

- **1.01.01** The Contractor must cooperate with **BNSF RAILWAY COMPANY**, hereinafter referred to as "**Railway**" where work is over or under on or adjacent to Railway property and/or right-of-way, hereafter referred to as "Railway Property", during the construction of the Bear Valley Cutoff Overpass widening.

- **1.01.02** The Contractor must execute and deliver to the Railway duplicate copies of the Exhibit "C-1" Agreement, in the form attached hereto, obligating the Contractor to provide and maintain in full force and effect the insurance called for under Section 3 of said Exhibit "C-1". Questions regarding procurement of the Railroad Protective Liability Insurance should be directed to Rosa Martinez at Marsh, USA, 214-303-8519.

- **1.01.03** The Contractor must plan, schedule and conduct all work activities so as not to interfere with the movement of any trains on Railway Property.

- **1.01.04** The Contractor's right to enter Railway's Property is subject to the absolute right of Railway to cause the Contractor's work on Railway's Property to cease if, in the opinion of Railway, Contractor's activities create a hazard to Railway's Property, employees, and/or operations. Railway will have the right to stop construction work on the Project if any of the following events take place: (i) Contractor (or any of its subcontractors) performs the Project work in a manner contrary to the plans and specifications approved by Railway; (ii) Contractor (or any of its subcontractors), in Railway's opinion, prosecutes the Project work in a manner which is hazardous to Railway property, facilities or the safe and expeditious movement of railroad traffic; (iii) the insurance described in the attached Exhibit C-1 is canceled during the course of the Project; or (iv) Contractor fails to pay Railway for the Temporary Construction License or the Easement. The work stoppage will continue until all necessary actions are taken by Contractor or its subcontractor to rectify the situation to the satisfaction of Railway's Division Engineer or until additional insurance has been delivered to and accepted by Railway. In the event of a breach of (i) this Agreement, (ii) the Temporary Construction License, or (iii) the Easement, Railway may immediately terminate the Temporary Construction License or the Easement. Any such work stoppage under this provision will not give rise to any liability on the part of Railway. Railway's right to stop the work is in addition to any other rights Railway may have including, but not limited to, actions or suits for

damages or lost profits. In the event that Railway desires to stop construction work on the Project, Railway agrees to immediately notify the following individual in writing:

Brian Gengler
14343 Civic Drive 5001
Victorville, CA 92393
Phone: 760-955-5156
Fax: 760-955-5159

- **1.01.05** The Contractor is responsible for determining and complying with all Federal, State and Local Governmental laws and regulations, including, but not limited to environmental laws and regulations (including but not limited to the Resource Conservation and Recovery Act, as amended; the Clean Water Act, the Oil Pollution Act, the Hazardous Materials Transportation Act, CERCLA), and health and safety laws and regulations. The Contractor hereby indemnifies, defends and holds harmless Railway for, from and against all fines or penalties imposed or assessed by Federal, State and Local Governmental Agencies against the Railway which arise out of Contractor's work under this Agreement.

- **1.01.06** The Contractor must notify The City of Victorville and Railway's Manager Public Projects, telephone number (909) 386-4474 at least thirty (30) calendar days before commencing any work on Railway Property. Contractor's notification to Railway must refer to Railway's file BF-10010127.

- **1.01.07** For any bridge demolition and/or falsework above any tracks or any excavations located with any part of the excavations located within, whichever is greater, twenty-five (25) feet of the nearest track or intersecting a slope from the plane of the top of rail on a 2 horizontal to 1 vertical slope beginning at eleven (11) feet from centerline of the nearest track, both measured perpendicular to center line of track, the Contractor must furnish the Railway five sets of working drawings showing details of construction affecting Railway Property and tracks. The working drawing must include the proposed method of installation and removal of falsework, shoring or cribbing, not included in the contract plans and two sets of structural calculations of any falsework, shoring or cribbing. For all excavation and shoring submittal plans, the current "BNSF-UPRR Guidelines for Temporary Shoring" must be used for determining the design loading conditions to be used in shoring design, and all calculations and submittals must be in accordance with the current "BNSF-UPRR Guidelines for Temporary Shoring". All submittal drawings and calculations must be stamped by a registered professional engineer licensed to practice in the state the project is located. All calculations must take into consideration railway surcharge loading and must be designed to meet American Railway Engineering and Maintenance-of-Way Association (previously known as American Railway

Engineering Association) Coopers E-80 live loading standard. All drawings and calculations must be stamped by a registered professional engineer licensed to practice in the state the project is located. The Contractor must not begin work until notified by the Railway that plans have been approved. The Contractor will be required to use lifting devices such as, cranes and/or winches to place or to remove any falsework over Railway's tracks. In no case will the Contractor be relieved of responsibility for results obtained by the implementation of said approved plans.

- **1.01.08** Subject to the movement of Railway's trains, Railway will cooperate with the Contractor such that the work may be handled and performed in an efficient manner. The Contractor will have no claim whatsoever for any type of damages or for extra or additional compensation in the event his work is delayed by the Railway.

1.02 Contractor Safety Orientation

- **1.02.01 No employee of the Contractor, its subcontractors, agents or invitees may enter Railway Property without first having completed Railway's Engineering Contractor Safety Orientation, found on the web site www.BNSFContractor.com. The Contractor must ensure that each of its employees, subcontractors, agents or invitees completes Railway's Engineering Contractor Safety Orientation through internet sessions before any work is performed on the Project. Additionally, the Contractor must ensure that each and every one of its employees, subcontractors, agents or invitees possesses a card certifying completion of the Railway Contractor Safety Orientation before entering Railway Property. The Contractor is responsible for the cost of the Railway Contractor Safety Orientation. The Contractor must renew the Railway Contractor Safety Orientation annually. Further clarification can be found on the web site or from the Railway's Representative.**

1.03 Railway Requirements

- **1.03.01** The Contractor must take protective measures as are necessary to keep railway facilities, including track ballast, free of sand, debris, and other foreign objects and materials resulting from his operations. Any damage to railway facilities resulting from Contractor's operations will be repaired or replaced by Railway and the cost of such repairs or replacement must be paid for by the Agency.

- **1.03.02** The Contractor must notify the Railway's Division Engineer at (909) 386-4509 and provide blasting plans to the Railway for review seven (7) calendar days prior to conducting any blasting operations adjacent to or on Railway's Property.

- **1.03.03** The Contractor must abide by the following temporary clearances during construction:

  - 15'-0" Horizontally from centerline of nearest track
  - 21'-6" Vertically above top of rail
  - 27'-0" Vertically above top of rail for electric wires carrying less than 750 volts
  - 28'-0" Vertically above top of rail for electric wires carrying 750 volts to 15,000 volts
  - 30'-0" Vertically above top of rail for electric wires carrying 15,000 volts to 20,000 volts
  - 34'-0" Vertically above top of rail for electric wires carrying more than 20,000 volts

- **1.03.04** Upon completion of construction, the following clearances shall be maintained:

  - 25' Horizontally from centerline of nearest track
  - 23' 6" Vertically above top of rail

- **1.03.05** Any infringement within State statutory clearances due to the Contractor's operations must be submitted to the Railway and to the City of Victorville and must not be undertaken until approved in writing by the Railway, and until the City of Victorville has obtained any necessary authorization from the State Regulatory Authority for the infringement. No extra compensation will be allowed in the event the Contractor's work is delayed pending Railway approval, and/or the State Regulatory Authority's approval.

- **1.03.06** In the case of impaired vertical clearance above top of rail, Railway will have the option of installing tell-tales or other protective devices Railway deems necessary for protection of Railway operations. The cost of tell-tales or protective devices will be borne by the Agency.

- **1.03.07** The details of construction affecting the Railway's Property and tracks not included in the contract plans must be submitted to the Railway by City of Victorville for approval before work is undertaken and this work must not be undertaken until approved by the Railway.

- **1.03.08** At other than public road crossings, the Contractor must not move any equipment or materials across Railway's tracks until permission has been obtained from the Railway. The Contractor must obtain a "Temporary Construction Crossing Agreement" from the Railway prior to moving his equipment or materials across the Railways tracks. The temporary crossing must be gated and locked at all times when not required for use by the Contractor. The temporary crossing for use of the

Contractor will be constructed and, at the completion of the project, removed at the expense of the Contractor.

- **1.03.09** Discharge, release or spill on the Railway Property of any hazardous substances, oil, petroleum, constituents, pollutants, contaminants, or any hazardous waste is prohibited and Contractor must immediately notify the Railway's Resource Operations Center at 1(800) 832-5452, of any discharge, release or spills in excess of a reportable quantity. Contractor must not allow Railway Property to become a treatment, storage or transfer facility as those terms are defined in the Resource Conservation and Recovery Act or any state analogue.

- **1.03.10** The Contractor upon completion of the work covered by this contract, must promptly remove from the Railway's Property all of Contractor's tools, equipment, implements and other materials, whether brought upon said property by said Contractor or any Subcontractor, employee or agent of Contractor or of any Subcontractor, and must cause Railway's Property to be left in a condition acceptable to the Railway's representative.

1.04 Contractor Roadway Worker on Track Safety Program and Safety Action Plan:

- **1.04.01** Each Contractor that will perform work within 25 feet of the centerline of a track must develop and implement a Roadway Worker Protection/On Track Safety Program and work with Railway Project Representative to develop an on track safety strategy as described in the guidelines listed in the on track safety portion of the Safety Orientation. This Program must provide Roadway Worker protection/on track training for all employees of the Contractor, its subcontractors, agents or invitees. This training is reinforced at the job site through job safety briefings. Additionally, each Contractor must develop and implement the Safety Action Plan, as provided for on the web site **www.BNSFContractor.com**, which will be made available to Railway prior to commencement of any work on Railway Property. During the performance of work, the Contractor must audit its work activities. The Contractor must designate an on-site Project Supervisor who will serve as the contact person for the Railway and who will maintain a copy of the Safety Action Plan, safety audits, and Material Safety Datasheets (MSDS), at the job site.

- **1.04.02** Contractor shall have a background investigation performed on all of its employees, subcontractors and agents who will be performing any services for Railroad under this Agreement which are determined by Railroad in its sole discretion **a)** to be on Railroad's property, or **b)** that require access to Railroad Critical Infrastructure, Railroad Critical Information Systems, Railroad's Employees, Hazardous Materials on Railroad's property or is being transported by or otherwise

in the custody of Railroad, or Freight in Transit involving Railroad.

The required background screening shall at a minimum meet the rail industry background screening criteria defined by the e-RAILSAFE Program as outlined at www.everifile.com, in addition to any other applicable regulatory requirements.

Contractor shall obtain written consent from all its employees, subcontractors or agents screened in compliance with the e-RAILSAFE Program to participate in the Program on their behalf and to release completed background information to Railroad's designee. Contractor shall be subject to periodic audit to ensure compliance.

Contractor subject to the e-RAILSAFE Program hereunder shall not permit any of its employees, subcontractors or agents to perform services hereunder who are not first approved under e-RAILSAFE Program standards. Railroad shall have the right to deny entry onto its premises or access as described in this section above to any of Contractor's employees, subcontractors or agents who do not display the authorized identification badge issued by a background screening service meeting the standards set forth in the e-RAILSAFE Program, or who in Railroad's opinion, which may not be unreasonable, may pose a threat to the safety or security of Railroad's operations, assets or personnel.

Contractors shall be responsible for ensuring that its employees, subcontractors and agents are United States citizens or legally working in the United States under a lawful and appropriate work VISA or other work authorization.

1.05 Railway Flagger Services:

- **1.05.01** The Contractor must give Railway's Roadmaster (909) 386-4730 a minimum of thirty (30) calendar days advance notice when flagging services will be required so that the Roadmaster can make appropriate arrangements (i.e., bulletin the flagger's position). If flagging services are scheduled in advance by the Contractor and it is subsequently determined by the parties hereto that such services are no longer necessary, the Contractor must give the Roadmaster five (5) working days advance notice so that appropriate arrangements can be made to abolish the position pursuant to union requirements.

- **1.05.02** Unless determined otherwise by Railway's Project Representative, Railway flagger will be required and furnished when Contractor's work activities are located over, under and/or within twenty-five (25) feet measured horizontally from centerline of the nearest track and when cranes or similar equipment positioned beyond 25-feet from the track centerline could foul the track in the event of tip over

or other catastrophic occurrence, but not limited thereto for the following conditions:

- **1.05.02a** When, upon inspection by Railway's Representative, other conditions warrant.

- **1.05.02b** When any excavation is performed below the bottom of tie elevation, if, in the opinion of Railway's representative, track or other Railway facilities may be subject to movement or settlement.

- **1.05.02c** When work in any way interferes with the safe operation of trains at timetable speeds.

- **1.05.02d** When any hazard is presented to Railway track, communications, signal, electrical, or other facilities either due to persons, material, equipment or blasting in the vicinity.

- **1.05.02e** Special permission must be obtained from the Railway before moving heavy or cumbersome objects or equipment which might result in making the track impassable.

- **1.05.03** Flagging services will be performed by qualified Railway flaggers.

  - **1.05.03a** Flagging crew generally consists of one employee. However, additional personnel may be required to protect Railway Property and operations, if deemed necessary by the Railways Representative.

  - **1.05.03b** Each time a flagger is called, the minimum period for billing will be the eight (8) hour basic day.

  - **1.05.03c** The cost of flagger services provided by the Railway will be borne by City of Victorville. The estimated cost for one (1) flagger is approximately between $800.00-$1,600.00 for an eight (8) hour basic day with time and one-half or double time for overtime, rest days and holidays. The estimated cost for each flagger includes vacation allowance, paid holidays, Railway and unemployment insurance, public liability and property damage insurance, health and welfare benefits, vehicle, transportation, meals, lodging, radio, equipment, supervision and other costs incidental to performing flagging services. Negotiations for Railway labor or collective bargaining agreements and rate changes authorized by appropriate Federal authorities may increase actual or estimated flagging rates. **THE FLAGGING RATE IN EFFECT AT THE TIME OF PERFORMANCE BY THE CONTRACTOR HEREUNDER WILL BE USED TO CALCULATE THE ACTUAL COSTS OF FLAGGING PURSUANT TO THIS**

PARAGRAPH.

- **1.05.03d** The average train traffic on this route is 74 freight trains per 24-hour period at a timetable speed 70 MPH and 2 passenger trains at a timetable speed of 79 MPH.

1.06 Contractor General Safety Requirements

- **1.06.01** Work in the proximity of railway track(s) is potentially hazardous where movement of trains and equipment can occur at any time and in any direction. All work performed by contractors within 25 feet of any track must be in compliance with FRA Roadway Worker Protection Regulations.

- **1.06.02** Before beginning any task on Railway Property, a thorough job safety briefing must be conducted with all personnel involved with the task and repeated when the personnel or task changes. If the task is within 25 feet of any track, the job briefing must include the Railway's flagger, as applicable, and include the procedures the Contractor will use to protect its employees, subcontractors, agents or invitees from moving any equipment adjacent to or across any Railway track(s).

- **1.06.03** Workers must not work within 25 feet of the centerline of any track without an on track safety strategy approved by the Railway's Project Representative. When authority is provided, every contractor employee must know: (1) who the Railway flagger is, and how to contact the flagger, (2) limits of the authority, (3) the method of communication to stop and resume work, and (4) location of the designated places of safety. Persons or equipment entering flag/work limits that were not previously job briefed, must notify the flagger immediately, and be given a job briefing when working within 25 feet of the center line of track.

- **1.06.04** When Contractor employees are required to work on the Railway Property after normal working hours or on weekends, the Railway's representative in charge of the project must be notified. A minimum of two employees must be present at all times.

- **1.06.05** Any employees, agents or invitees of Contractor or its subcontractors under suspicion of being under the influence of drugs or alcohol, or in the possession of same, will be removed from the Railway's Property and subsequently released to the custody of a representative of Contractor management. Future access to the Railway's Property by that employee will be denied.

- **1.06.06** Any damage to Railway Property, or any hazard noticed on passing trains must be reported immediately to the Railway's representative in charge of the project. Any vehicle or machine which may come in contact with track, signal

equipment, or structure (bridge) and could result in a train derailment must be reported immediately to the Railway representative in charge of the project and to the Railway's Resource Operations Center at 1(800) 832-5452. Local emergency numbers are to be obtained from the Railway representative in charge of the project prior to the start of any work and must be posted at the job site.

- **1.06.07** For safety reasons, all persons are prohibited from having pocket knives, firearms or other deadly weapons in their possession while working on Railway's Property.

- **1.06.08** All personnel protective equipment (PPE) used on Railway Property must meet applicable OSHA and ANSI specifications. Current Railway personnel protective equipment requirements are listed on the web site, **www.BNSFContractor.com,** however, a partial list of the requirements include: a) safety glasses with permanently affixed side shields (no yellow lenses); b) hard hats; c) safety shoe with: hardened toes, above-the-ankle lace-up and a defined heel; and d) high visibility retro-reflective work wear. The Railway's representative in charge of the project is to be contacted regarding local specifications for meeting requirements relating to hi-visibility work wear. Hearing protection, fall protection, gloves, and respirators must be worn as required by State and Federal regulations. **(NOTE – Should there be a discrepancy between the information contained on the web site and the information in this paragraph, the web site will govern.)**

- **1.06.09 THE CONTRACTOR MUST NOT PILE OR STORE ANY MATERIALS, MACHINERY OR EQUIPMENT CLOSER THAN 25'-0" TO THE CENTER LINE OF THE NEAREST RAILWAY TRACK. MATERIALS, MACHINERY OR EQUIPMENT MUST NOT BE STORED OR LEFT WITHIN 250 FEET OF ANY HIGHWAY/RAIL AT-GRADE CROSSINGS OR TEMPORARY CONSTRUCTION CROSSING, WHERE STORAGE OF THE SAME WILL OBSTRUCT THE VIEW OF A TRAIN APPROACHING THE CROSSING. PRIOR TO BEGINNING WORK, THE CONTRACTOR MUST ESTABLISH A STORAGE AREA WITH CONCURRENCE OF THE RAILWAY'S REPRESENTATIVE.**

- **1.06.10** Machines or vehicles must not be left unattended with the engine running. Parked machines or equipment must be in gear with brakes set and if equipped with blade, pan or bucket, they must be lowered to the ground. All machinery and equipment left unattended on Railway's Property must be left inoperable and secured against movement. (See internet Engineering Contractor Safety Orientation program for more detailed specifications)

- **1.06.11** Workers must not create and leave any conditions at the work site that would interfere with water drainage. Any work performed over water must meet all Federal, State and Local regulations.

- **1.06.12** All power line wires must be considered dangerous and of high voltage unless informed to the contrary by proper authority. For all power lines the minimum clearance between the lines and any part of the equipment or load must be; 200 KV or below - 15 feet; 200 to 350 KV - 20 feet; 350 to 500 KV - 25 feet; 500 to 750 KV - 35 feet; and 750 to 1000 KV - 45 feet. If capacity of the line is not known, a minimum clearance of 45 feet must be maintained. A person must be designated to observe clearance of the equipment and give a timely warning for all operations where it is difficult for an operator to maintain the desired clearance by visual means.

1.07 Excavation:

- **1.07.01** Before excavating, the Contractor must determine whether any underground pipe lines, electric wires, or cables, including fiber optic cable systems are present and located within the Project work area. The Contractor must determine whether excavation on Railway's Property could cause damage to buried cables resulting in delay to Railway traffic and disruption of service to users. Delays and disruptions to service may cause business interruptions involving loss of revenue and profits. Before commencing excavation, the Contractor must contact BNSF's Field Engineering Representative (909) 386-4079. All underground and overhead wires will be considered HIGH VOLTAGE and dangerous until verified with the company having ownership of the line. **It is the Contractor's responsibility to notify any other companies that have underground utilities in the area and arrange for the location of all underground utilities before excavating.**

- **1.07.02** The Contractor must cease all work and notify the Railway immediately before continuing excavation in the area if obstructions are encountered which do not appear on drawings. If the obstruction is a utility and the owner of the utility can be identified, then the Contractor must also notify the owner immediately. If there is any doubt about the location of underground cables or lines of any kind, no work must be performed until the exact location has been determined. There will be no exceptions to these instructions.

- **1.07.03** All excavations must be conducted in compliance with applicable OSHA regulations and, regardless of depth, must be shored where there is any danger to tracks, structures or personnel.

- **1.07.04** Any excavations, holes or trenches on the Railway's Property must be covered, guarded and/or protected when not being worked on. When leaving work site areas at night and over weekends, the areas must be secured and left in a condition that will ensure that Railway employees and other personnel who may be working or passing through the area are protected from all hazards. All excavations must be back filled as soon as possible.

BNSF RAILWAY

1.08 Hazardous Waste, Substances and Material Reporting:

- **1.08.01** If Contractor discovers any hazardous waste, hazardous substance, petroleum or other deleterious material, including but not limited to any non-containerized commodity or material, on or adjacent to Railway's Property, in or near any surface water, swamp, wetlands or waterways, while performing any work under this Agreement, Contractor must immediately: (a) notify the Railway's Resource Operations Center at 1(800) 832-5452, of such discovery: (b) take safeguards necessary to protect its employees, subcontractors, agents and/or third parties: and (c) exercise due care with respect to the release, including the taking of any appropriate measure to minimize the impact of such release.

1.09 Personal Injury Reporting

- **1.09.01** The Railway is required to report certain injuries as a part of compliance with Federal Railroad Administration (FRA) reporting requirements. Any personal injury sustained by an employee of the Contractor, subcontractor or Contractor's invitees while on the Railway's Property must be reported immediately (by phone mail if unable to contact in person) to the Railway's representative in charge of the project. The Non-Employee Personal Injury Data Collection Form contained herein is to be completed and sent by Fax to the Railway at 1(817) 352-7595 and to the Railway's Project Representative no later than the close of shift on the date of the injury.

BNSF RAILWAY

NON-EMPLOYEE PERSONAL INJURY DATA COLLECTION

(If injuries are in connection with rail equipment accident/incident, highway rail grade crossing accident or automobile accident, ensure that appropriate information is obtained, forms completed and that data entry personnel are aware that injuries relate to that specific event.)

Injured Person Type:

- ☐ Passenger on train (C)
- ☐ Non-employee (N) *(i.e., emp of another railroad, or, non-BNSF emp involved in vehicle accident, including company vehicles)*
- ☐ Contractor/safety sensitive (F)
- ☐ Contractor/non-safety sensitive (G)
- ☐ Volunteer/safety sensitive (H)
- ☐ Volunteer/other non-safety sensitive (I)
- ☐ Non-trespasser (D) - to include highway users involved in highway rail grade crossing accidents who did not go around or through gates
- ☐ Trespasser (E) - to include highway users involved in highway rail grade crossing accidents who went around or through gates
- ☐ Non-trespasser (J) - Off railroad property

If train involved, Train ID: _____

Transmit attached information to Accident/Incident Reporting Center by:
Fax 1-817-352-7595 or by Phone 1-800-697-6736 **or email to:** Accident-Reporting.Center@BNSF.com

Officer Providing Information:

_____ _____ _____
(Name) (Employee No.) (Phone #)

REPORT PREPARED TO COMPLY WITH FEDERAL ACCIDENT REPORTING REQUIREMENTS AND PROTECTED FROM DISCLOSURE PURSUANT TO 49 U.S.C. 20903 AND 83 U.S.C. 490

NON-EMPLOYEE PERSONAL INJURY DATA COLLECTION

INFORMATION REQUIRED TO BE COLLECTED PURSUANT TO FEDERAL REGULATION. IT SHOULD BE USED FOR COMPLIANCE WITH FEDERAL REGULATIONS ONLY AND IT IS NOT INTENDED TO PRESUME ACCEPTANCE OF RESPONSIBILITY OR LIABILITY.

1. Accident City/St: _____ 2. Date: _____ Time: _____

County: _____ 3. Temperature: _____ 4. Weather: _____
(if non BNSF location)

Mile Post / Line Segment: _____

5. Driver's License No (and state) or other ID: _____ **SSN (required)**: _____

6. Name (last, first, mi): _____

7. Address: _____ City: _____ St: _____ Zip: _____

8. Date of Birth: _____ and/or Age: _____ Gender: _____
(if available)

Phone Number: _____ Employer: _____

9. Injury: _____ 10. Body Part: _____
(i.e., Laceration, etc.) (i.e., Hand, etc.)

11. Description of Accident (To include location, action, result, etc.): _____

_____

_____

_____

12. Treatment:

- ☐ First Aid Only _____
- ☐ Required Medical Treatment _____
- ☐ Other Medical Treatment _____

13. Dr. Name: _____ Date: _____

14. Dr. Address:

Street: _____ City: _____ St: _____ Zip: _____

15. Hospital Name: _____

16. Hospital Address:

Street: _____ City: _____ St: _____ Zip: _____

17. Diagnosis: _____

REPORT PREPARED TO COMPLY WITH FEDERAL ACCIDENT REPORTING REQUIREMENTS AND PROTECTED FROM DISCLOSURE PURSUANT TO 49 U.S.C. 20903 AND 83 U.S.C. 490

EXHIBIT "C-1"

Agreement Between
BNSF RAILWAY COMPANY
and the
CONTRACTOR

Railway File: **BF-10010127**

Agency Project: **Bear Valley Cutoff Widening Project**

_____ hereinafter called "Contractor"), has entered into an agreement (hereinafter called "Agreement") dated _____, 201_, with the City of Victorville for the performance of certain work in connection with the following project: Bear Valley Cutoff Overpass Widening Performance of such work will necessarily require Contractor to enter **BNSF RAILWAY COMPANY** (hereinafter called "Railway") right of way and property (hereinafter called "Railway Property"). The Agreement provides that no work will be commenced within Railway Property until the Contractor employed in connection with said work for City of Victorville (i) executes and delivers to Railway an Agreement in the form hereof, and (ii) provides insurance of the coverage and limits specified in such Agreement and Section 3 herein. If this Agreement is executed by a party who is not the Owner, General Partner, President or Vice President of Contractor, Contractor must furnish evidence to Railway certifying that the signatory is empowered to execute this Agreement on behalf of Contractor.

Accordingly, in consideration of Railway granting permission to Contractor to enter upon Railway Property and as an inducement for such entry, Contractor, effective on the date of the Agreement, has agreed and does hereby agree with Railway as follows:

1) RELEASE OF LIABILITY AND INDEMNITY

Contractor hereby waives, releases, indemnifies, defends and holds harmless Railway for all judgments, awards, claims, demands, and expenses (including attorneys' fees), for injury or death to all persons, including Railway's and Contractor's officers and employees, and for loss and damage to property belonging to any person, arising in any manner from Contractor's or any of Contractor's subcontractors' acts or omissions or any work performed on or about Railway's property or right-of-way. **THE LIABILITY ASSUMED BY CONTRACTOR WILL NOT BE AFFECTED BY THE FACT, IF IT IS A FACT, THAT THE DESTRUCTION, DAMAGE, DEATH, OR INJURY WAS OCCASIONED BY OR CONTRIBUTED TO BY THE NEGLIGENCE OF RAILWAY, ITS AGENTS, SERVANTS, EMPLOYEES OR OTHERWISE,**

EXCEPT TO THE EXTENT THAT SUCH CLAIMS ARE PROXIMATELY CAUSED BY THE WILLFUL MISCONDUCT OR SOLE NEGLIGENCE OF RAILWAY.

THE INDEMNIFICATION OBLIGATION ASSUMED BY CONTRACTOR INCLUDES ANY CLAIMS, SUITS OR JUDGMENTS BROUGHT AGAINST RAILWAY UNDER THE FEDERAL EMPLOYEE'S LIABILITY ACT, INCLUDING CLAIMS FOR STRICT LIABILITY UNDER THE SAFETY APPLIANCE ACT OR THE LOCOMOTIVE INSPECTION ACT, WHENEVER SO CLAIMED.

Contractor further agrees, at its expense, in the name and on behalf of Railway, that it will adjust and settle all claims made against Railway, and will, at Railway's discretion, appear and defend any suits or actions of law or in equity brought against Railway on any claim or cause of action arising or growing out of or in any manner connected with any liability assumed by Contractor under this Agreement for which Railway is liable or is alleged to be liable. Railway will give notice to Contractor, in writing, of the receipt or dependency of such claims and thereupon Contractor must proceed to adjust and handle to a conclusion such claims, and in the event of a suit being brought against Railway, Railway may forward summons and complaint or other process in connection therewith to Contractor, and Contractor, at Railway's discretion, must defend, adjust, or settle such suits and protect, indemnify, and save harmless Railway from and against all damages, judgments, decrees, attorney's fees, costs, and expenses growing out of or resulting from or incident to any such claims or suits.

In addition to any other provision of this Agreement, in the event that all or any portion of this Article shall be deemed to be inapplicable for any reason, including without limitation as a result of a decision of an applicable court, legislative enactment or regulatory order, the parties agree that this Article shall be interpreted as requiring Contractor to indemnify Railway to the fullest extent permitted by applicable law. **THROUGH THIS AGREEMENT THE PARTIES EXPRESSLY INTEND FOR CONTRACTOR TO INDEMNIFY RAILWAY FOR RAILWAY'S ACTS OF NEGLIGENCE.**

It is mutually understood and agreed that the assumption of liabilities and indemnification provided for in this Agreement survive any termination of this Agreement.

2) TERM

This Agreement is effective from the date of the Agreement until (i) the completion of the project set forth herein, and (ii) full and complete payment to Railway of any and all sums or other amounts owing and due hereunder.

3) INSURANCE

Contractor shall, at its sole cost and expense, procure and maintain during the life of this Agreement the following insurance coverage:

A. Commercial General Liability insurance. This insurance shall contain broad form contractual liability with a combined single limit of a minimum of $5,000,000 each occurrence and an aggregate limit of at least $10,000,000 but in no event less than the amount otherwise carried by the Contractor. Coverage must be purchased on a post 2004 ISO occurrence form or equivalent and include coverage for, but not limit to the following:

- Bodily Injury and Property Damage
- Personal Injury and Advertising Injury
- Fire legal liability
- Products and completed operations

This policy shall also contain the following endorsements, which shall be indicated on the certificate of insurance:

- The definition of insured contract shall be amended to remove any exclusion or other limitation for any work being done within 50 feet of railroad property.
- Waver of subrogation in favor of and acceptable to Railway.
- Additional insured endorsement in favor of and acceptable to Railway.
- Separation of insureds.
- The policy shall be primary and non-contributing with respect to any insurance carried by Railway.

It is agreed that the workers' compensation and employers' liability related exclusions in the Commercial General Liability insurance policy(s) required herein are intended to apply to employees of the policy holder and shall not apply to ***Railway*** employees.

No other endorsements limiting coverage as respects obligations under this Agreement may be included on the policy with regard to the work being performed under this agreement.

B. Business Automobile Insurance. This insurance shall contain a combined single limit of at least $1,000,000 per occurrence, and include coverage for, but not limited to the following:

- Bodily injury and property damage
- Any and all vehicles owned, used or hired

The policy shall also contain the following endorsements or language, which shall be indicated on the certificate of insurance:

- Waiver of subrogation in favor of and acceptable to Railway.
- Additional insured endorsement in favor of and acceptable to Railway.
- Separation of insureds.
- The policy shall be primary and non-contributing with respect to any insurance carried by Railway.

C. Workers Compensation and Employers Liability insurance including coverage for, but not limited to:

- Contractor's statutory liability under the worker's compensation laws of the state(s) in which the work is to be performed. If optional under State law, the insurance must cover all employees anyway.
- Employers' Liability (Part B) with limits of at least $500,000 each accident, $500,000 by disease policy limit, $500,000 by disease each employee.

This policy shall also contain the following endorsements or language, which shall be indicated on the certificate of insurance:

- Waiver of subrogation in favor of and acceptable to Railway.

D. Railroad Protective Liability insurance naming only the ***Railway*** as the Insured with coverage of at least $5,000,000 per occurrence and $10,000,000 in the aggregate. The policy Must be issued on a standard ISO form CG 00 35 12 04 and include the following:

- Endorsed to include the Pollution Exclusion Amendment
- Endorsed to include the Limited Seepage and Pollution Endorsement.
- Endorsed to remove any exclusion for punitive damages.
- No other endorsements restricting coverage may be added.
- The original policy must be provided to the ***Railway*** prior to performing any work or services under this Agreement
- Definition of "Physical Damage to Property" shall be endorsed to read: "means direct and accidental loss of or damage to all property owned by any named insured and all property in any named insured' care, custody, and control arising out of the acts or omissions of the contractor named on the Declarations.

In lieu of providing a Railroad Protective Liability Policy, Licensee may participate (if available) in Railway's Blanket Railroad Protective Liability Insurance Policy.

Other Requirements:

Where allowable by law, all policies (applying to coverage listed above) shall contain no exclusion for punitive damages.

Contractor agrees to waive its right of recovery against ***Railway*** for all claims and suits against ***Railway***. In addition, its insurers, through the terms of the policy or policy endorsement, waive their right of subrogation against ***Railway*** for all claims and suits. Contractor further waives its right of recovery, and its insurers also waive their right of subrogation against ***Railway*** for loss of its owned or leased property or property under Contractor's care, custody or control.

Allocated Loss Expense shall be in addition to all policy limits for coverages referenced above.

Contractor is not allowed to self-insure without the prior written consent of ***Railway.*** If granted by ***Railway***, any self-insured retention or other financial responsibility for claims shall be covered directly by Contractor in lieu of insurance. Any and all ***Railway*** liabilities that would otherwise, in accordance with the provisions of this Agreement, be covered by Contractor's insurance will be covered as if Contractor elected not to include a deductible, self-insured retention or other financial responsibility for claims.

Prior to commencing services, Contractor shall furnish to ***Railway*** an acceptable certificate(s) of insurance from an authorized representative evidencing the required coverage(s), endorsements, and amendments. The certificate should be directed to the following address:

BNSF Railway Company
c/o CertFocus
P.O. Box 140528
Kansas City, MO 64114
Toll Free: 877-576-2378
Fax number: 817-840-7487
Email: BNSF@certfocus.com
www.certfocus.com

Contractor shall notify ***Railway*** in writing at least 30 days prior to any cancellation, non-renewal, substitution or material alteration.

Any insurance policy shall be written by a reputable insurance company acceptable to ***Railway*** or with a current Best's Guide Rating of A- and Class VII or better, and authorized to do business in the state(s) in which the service is to be provided.

If coverage is purchased on a "claims made" basis, Contractor hereby agrees to maintain coverage in force for a minimum of three years after expiration, cancellation or termination of this Agreement. Annually Contractor agrees to provide evidence of such coverage as required hereunder.

Contractor represents that this Agreement has been thoroughly reviewed by Contractor's insurance agent(s)/broker(s), who have been instructed by Contractor to procure the insurance coverage required by this Agreement.

Not more frequently than once every five years, ***Railway*** may reasonably modify the required insurance coverage to reflect then-current risk management practices in the railroad industry and underwriting practices in the insurance industry.

If any portion of the operation is to be subcontracted by Contractor, Contractor shall require that the subcontractor shall provide and maintain insurance coverage(s) as set forth herein, naming ***Railway*** as an additional insured, and shall require that the subcontractor shall release, defend and indemnify ***Railway*** to the same extent and under the same terms and conditions as Contractor is required to release, defend and indemnify ***Railway*** herein.

Failure to provide evidence as required by this section shall entitle, but not require, ***Railway*** to terminate this Agreement immediately. Acceptance of a certificate that does not comply with this section shall not operate as a waiver of Contractor's obligations hereunder.

The fact that insurance (including, without limitation, self-insurance) is obtained by Contractor shall not be deemed to release or diminish the liability of Contractor including, without limitation, liability under the indemnity provisions of this Agreement. Damages recoverable by ***Railway*** shall not be limited by the amount of the required insurance coverage.

In the event of a claim or lawsuit involving ***Railway*** arising out of this agreement, Contractor will make available any required policy covering such claim or lawsuit.

These insurance provisions are intended to be a separate and distinct obligation on the part of the Contractor. Therefore, these provisions shall be enforceable and Contractor shall be bound thereby regardless of whether or not indemnity provisions are determined to be enforceable in the jurisdiction in which the work covered hereunder is performed.

For purposes of this section, ***Railway*** shall mean "Burlington Northern Santa Fe LLC", "BNSF Railway Company" and the subsidiaries, successors, assigns and affiliates of each.

4) SALES AND OTHER TAXES

In the event applicable sales taxes of a state or political subdivision of a state of the United States are levied or assessed in connection with and directly related to any amounts invoiced by Contractor to Railway ("Sales Taxes"), Railway shall be responsible for paying only the Sales Taxes that Contractor separately states on the invoice or other billing documents provided to Railway; *provided, however,* that (i) nothing herein shall preclude Railway from claiming whatever Sales Tax exemptions are applicable to amounts Contractor bills Railway, (ii) Contractor shall be responsible for all sales, use, excise, consumption, services and other taxes which may accrue on all services, materials, equipment, supplies or fixtures that Contractor and its subcontractors use or consume in the performance of this Agreement, (iii) Contractor shall be responsible for Sales Taxes (together with any penalties, fines or interest thereon) that Contractor fails to separately state on the invoice or other billing documents provided to Railway or fails to collect at the time of payment by Railway of invoiced amounts (except where Railway claims a Sales Tax exemption), and (iv) Contractor shall be responsible for Sales Taxes (together with any penalties, fines or interest thereon) if Contractor fails to issue separate invoices for each state in which Contractor delivers goods, provides services or, if applicable, transfers intangible rights to Railway.

Upon request, Contractor shall provide Railway satisfactory evidence that all taxes (together with any penalties, fines or interest thereon) that Contractor is responsible to pay under this Agreement have been paid. If a written claim is made against Contractor for Sales Taxes with respect to which Railway may be liable for under this Agreement, Contractor shall promptly notify Railway of such claim and provide Railway copies of all correspondence received from the taxing authority. Railway shall have the right to contest, protest, or claim a refund, in Railway's own name, any Sales Taxes paid by Railway to Contractor or for which Railway might otherwise be responsible for under this Agreement; provided, however, that if Railway is not permitted by law to contest any such Sales Tax in its own name, Contractor shall, if requested by Railway at Railway's sole cost and expense, contest in Contractor's own name the validity, applicability or amount of such Sales Tax and allow Railway to control and conduct such contest.

Railway retains the right to withhold from payments made under this Agreement amounts required to be withheld under tax laws of any jurisdiction. If Contractor is claiming a withholding exemption or a reduction in the withholding rate of any jurisdiction on any payments under this Agreement, before any payments are made (and in each succeeding period or year as required by law), Contractor agrees to furnish to Railway a properly completed exemption form prescribed by such jurisdiction. Contractor shall be responsible for any taxes, interest or penalties assessed against Railway with respect to withholding taxes that Railway does not withhold from payments to Contractor.

5) EXHIBIT "C" CONTRACTOR REQUIREMENTS

The Contractor must observe and comply with all provisions, obligations, requirements and limitations contained in the Agreement, and the Contractor Requirements set forth on Exhibit "C" attached to the Agreement and this Agreement, including, but not be limited to, payment of all costs incurred for any damages to Railway roadbed, tracks, and/or appurtenances thereto, resulting from use, occupancy, or presence of its employees, representatives, or agents or subcontractors on or about the construction site. Contractor shall execute a Temporary Construction Crossing Agreement or Private Crossing Agreement (http://www.bnsf.com/communities/faqs/permits-real-estate/), for any temporary crossing requested to aid in the construction of this Project, if approved by BNSF.

6) TRAIN DELAY

Contractor is responsible for and hereby indemnifies and holds harmless Railway (including its affiliated railway companies, and its tenants) for, from and against all damages arising from any unscheduled delay to a freight or passenger train which affects Railway's ability to fully utilize its equipment and to meet customer service and contract obligations. Contractor will be billed, as further provided below, for the economic losses arising from loss of use of equipment, contractual loss of incentive pay and bonuses and contractual penalties resulting from train delays, whether caused by Contractor, or subcontractors, or by the Railway performing work under this Agreement. Railway agrees that it will not perform any act to unnecessarily cause train delay.

For loss of use of equipment, Contractor will be billed the current freight train hour rate per train as determined from Railway's records. Any disruption to train traffic may cause delays to multiple trains at the same time for the same period.

Additionally, the parties acknowledge that passenger, U.S. mail trains and certain other grain, intermodal, coal and freight trains operate under incentive/penalty contracts between Railway and its customer(s). Under these arrangements, if Railway does not meet its contract service commitments, Railway may suffer loss of performance or incentive pay and/or be subject to penalty payments. Contractor is responsible for any train performance and incentive penalties or other contractual economic losses actually incurred by Railway which are attributable to a train delay caused by Contractor or its subcontractors.

The contractual relationship between Railway and its customers is proprietary and confidential. In the event of a train delay covered by this Agreement, Railway will share information relevant to any train delay to the extent consistent with Railway confidentiality obligations. The rate then in effect at the time of

performance by the Contractor hereunder will be used to calculate the actual costs of train delay pursuant to this agreement.

Contractor and its subcontractors must give Railway's representative Project Engineer (909) 386-4079 weeks advance notice of the times and dates for proposed work windows. Railway and Contractor will establish mutually agreeable work windows for the project. Railway has the right at any time to revise or change the work windows due to train operations or service obligations. Railway will not be responsible for any additional costs or expenses resulting from a change in work windows. Additional costs or expenses resulting from a change in work windows shall be accounted for in Contractor's expenses for the project.

Contractor and subcontractors must plan, schedule, coordinate and conduct all Contractor's work so as to not cause any delays to any trains.

IN WITNESS WHEREOF, each of the parties hereto has caused this Agreement to be executed by its duly authorized officer the day and year first above written.

Contractor

By: _____

Printed Name: _____

Title: _____

BNSF Railway Company

By: _____

Name: _____
Manager Public Projects

Accepted and effective this _____day of 20__.

Contact Person: _____

Address: _____

City: _____

State: _____ Zip: _____

Fax: _____

Phone: _____

E-mail: _____

OVERPASS AGREEMENT

FOR

THE WIDENING OF THE BEAR VALLEY OVERHEAD

EXHIBIT D

RAILROAD WORK COST ESTIMATES

EXHIBIT D

Railroad Work Summary

Railroad Flagging	$329,458
Engineering Inspection/Coordination and Structure Submittal Reviews	$266,640
Total	**$596,098**

***** MAINTAIN PROPRIETARY CONFIDENTIALITY *****

BNSF RAILWAY COMPANY
FHPM ESTIMATE FOR
CITY OF VICTORVILLE

LOCATION THORN | DETAILS OF ESTIMATE | PLAN ITEM : 229582000 | VERSION : 1

PURPOSE, JUSTIFICATION AND DESCRIPTION

FLG - CAS DIV CAJON SUB LS 7600 MP 41.587 - DOT #026086L - 100% BILLABLE TO CITY OF VICTORVILLE

BNSF TO PROVIDE APPROX 250 DAYS FLAGGING FOR BEAR VALLEY WIDENING CONSTRUCTION

REQUESTED BY GREG J. ROUSSEAU 8/22/16

DESCRIPTION	QUANTITY	U/M	COST	TOTAL $
**********				
LABOR				
**********				
FLAGGING - GRADING - CAP	3000.0	MH	91,980	
PAYROLL ASSOCIATED COSTS			55,381	
DA OVERHEADS			84,180	
EQUIPMENT EXPENSES			49,558	
INSURANCE EXPENSES			15,443	
TOTAL LABOR COST			296,542	296,542
**********				
MATERIAL				
**********				
TOTAL MATERIAL COST			0	0
**********				
OTHER				
**********				
TOTAL OTHER ITEMS COST			0	0
PROJECT SUBTOTAL				296,542
CONTINGENCIES				29,654
BILL PREPARATION FEE				3,262
GROSS PROJECT COST				329,458
LESS COST PAID BY BNSF				0
TOTAL BILLABLE COST				329,458

***** MAINTAIN PROPRIETARY CONFIDENTIALITY *****

BNSF RAILWAY COMPANY
FHPM ESTIMATE FOR
CITY OF VICTORVILLE

LOCATION THORN | DETAILS OF ESTIMATE | PLAN ITEM : 229583000 | VERSION : 1

PURPOSE, JUSTIFICATION AND DESCRIPTION

INSP - CAS DIV CAJON SUB LS 7600 MP 41.587 - DOT #026086L - 100% BILLABLE TO CITY OF VICTORVILLE

BNSF TO PROVIDE APPROX 250 DAYS INSPECTION-COORDINATIN-SUBMITTAL REVIEWS

REQUESTED BY GREG J. ROUSSEAU 8/22/16

DESCRIPTION	QUANTITY	U/M	COST	TOTAL $
**********				
LABOR				
**********				
TOTAL LABOR COST			0	0
**********				
MATERIAL				
**********				
TOTAL MATERIAL COST			0	0
**********				
OTHER				
**********				
INSPECTOR/COORDINATOR	250.0	DAY	200,000	
SUBMITTAL REVIEW	1.0	EA	40,000	
TOTAL OTHER ITEMS COST			240,000	240,000
PROJECT SUBTOTAL				240,000
CONTINGENCIES				24,000
BILL PREPARATION FEE				2,640
GROSS PROJECT COST				266,640
LESS COST PAID BY BNSF				0
TOTAL BILLABLE COST				266,640

OVERPASS AGREEMENT

FOR

THE WIDENING OF THE BEAR VALLEY OVERHEAD

EXHIBIT E

FINAL APPROVAL OF PLANS AND SPECIFICATIONS

Exhibit E

Jason L. Sanchez
740 Carnegie Drive
San Bernardino, CA 92408
909-386-4474
Jason.Sanchez@BNSF.com

Date: September 5, 2017

Mr. Brian Gengler
City of Victorville
City Engineer
14343 Civic Drive 5001
Victorville, CA 92393

Re: Final Approval of Plans and Specifications dated _____, 20__, drafted by The City of Victorville (**hereinafter called, the "Plans and Specifications")**

Dear Mr. Gengler:

This letter serves as BNSF RAILWAY COMPANY's ("BNSF") final written approval of the Plans and Specifications covering the widening of the Bear Valley overpass in Victorville, CA. This final written approval is given to The City of Victorville ("Agency") pursuant to Article III, Section 1 of that certain Overpass Agreement between BNSF and Agency, dated _____, 20__, which this Exhibit E is attached to and made a part thereof.

If the Plans and Specifications are revised by Agency subsequent to the date set forth above, this letter shall no longer serve as final written approval of the Plans and Specifications and Agency must resubmit said Plans and Specifications to BNSF for final written approval.

It is understood that the approvals contained in this letter do not cover, the approvals of plans and specifications for any falsework, shoring, and demolition that may be subsequently submitted to BNSF by CITY or its contractor for approval.

BNSF has not reviewed the design details or calculations for structural integrity or engineering accuracy. BNSF accepts no responsibility for errors or omissions in the design of the project.

Regards,

_____
Jason L. Sanchez

OVERPASS AGREEMENT

FOR

THE WIDENING OF THE BEAR VALLEY OVERHEAD

EXHIBIT F

BNSF BRIDGE REQUIREMENTS

Exhibit F

BNSF Bridge Requirements

BRIDGE DESIGN, PLANS & SPECIFICATIONS:

Except for the design of temporary falsework and shoring, BNSF review of the Structure plans will be limited to the vertical and horizontal clearances, sight distance for existing train signals, foundation dimensions and drainage characteristics as they relate to existing and future tracks. BNSF will not review structural design calculations for the permanent Structure unless a member or members are influenced by railroad live loads.

Temporary falsework and shoring plans and calculations must be reviewed and approved by BNSF prior to beginning construction. The Agency shall perform an independent review of the design calculations for temporary falsework and shoring prior to submitting them to BNSF for approval. Temporary construction clearances must be no less than 15 feet measured horizontally from the centerline of the nearest track and 21 feet-6 inches measured vertically from the top of rail of the most elevated track to the bottom of lowest temporary falsework member. State regulatory agencies may have more restrictive requirements for temporary railroad clearances.

For the permanent Structure, the Agency will submit plans showing the least horizontal distance from the centerline of existing and future tracks to the face of the nearest member of the proposed Structure. The location of the least horizontal distance must be accurately described such that BNSF can determine where it will occur in both the horizontal and vertical plane. If the permanent member is within 25 feet of the nearest track (or future track), collision walls shall be incorporated into the permanent Structure design according to American Railway Engineering and Maintenance Association Manual of Recommended Practice - Chapter 8 - Article 2.1.5.

For the permanent Structure, the Agency will submit plans showing the least vertical clearance from top of the most elevated rail of existing and future tracks to the lowest point of the proposed Structure. A profile of the existing top of rail elevation shall be plotted on the bridge plans. The profile shall extend for 500 feet in each direction of the proposed overpass and a separate profile shall be plotted for each track. If the existing top of rail profile(s) is not uniform such that a sag exists in the vicinity of the proposed Structure, the permanent Structure vertical clearance shall be increased sufficiently to accommodate a raise in the track profile to remove the sag. Prior to beginning construction of the permanent Structure, the top of rail elevations should be checked and verified that they have not changed from the assumed elevations utilized for the design of the bridge.

Prior to issuing any invitation to bid on construction of the Structure, the Agency should conduct a pre-bid meeting where prospective Providers have the opportunity to communicate with BNSF personnel regarding site specific train speeds, train density, and general safety requirements for men and equipment working near live tracks. Any invitation to bid and

specifications for the Structure must be submitted to BNSF for review and approval prior to letting of bids for the Project.

BRIDGE CONSTRUCTION:

After awarding the bid, but prior to the Provider entering BNSF's right-of –way or property, the Agency should conduct a pre-construction meeting with BNSF personnel in attendance to reiterate the safety requirements of construction activity adjacent to live tracks.

During construction, BNSF may require an independent engineering inspector to be present during certain critical activities of the Project, including but not limited to: driving foundation piles, erecting falsework, construction of shoring and retaining walls, placing concrete, placing soil backfill and compaction processes. The Agency shall reimburse BNSF for all costs of supplemental inspection services.

Within 90 days of the conclusion of the Project and final acceptance by BNSF, the Agency will provide BNSF with a complete electronic set of the bridge plans labeled "As Built". Those plans will reflect any and all deviations from the original plans that occurred during construction. The "As Built" plans will be submitted in Micro Station *.dgn electronic format (preferred) or AutoCAD *.dwg format. Electronic plans are to be submitted in the original format used for CAD plan preparation and not converted to another format prior to submission. Actual measured "as constructed" clearances shall be shown as well as depth, size and location of all foundation components. The plans shall show dimensioned locations of existing and relocated utilities.

BRIDGE MAINTENANCE:

The Agency will be responsible for maintenance and repair of the Structure including the earth retention components, embankment slopes, erosion control, surface drainage, fencing, deck drains, landscaping, paint, walkways, handrails, lighting, and other improvements associated with the Project.

Fencing and other pedestrian access controls within BNSF's right-of-way and incorporated into the Project shall be designed and maintained by the Agency. Trespasser control shall be the responsibility of the Agency. Graffiti removal will be the responsibility of the Agency.

BRIDGE INSPECTION:

The Agency will conduct annual routine structural inspections. In the event of an earthquake, fire, flood, damage from vehicular impacts or other emergent situations, the Agency will provide an immediate inspection by qualified personnel and notify BNSF of damage that may affect safe passage of trains. If necessary the Agency will embargo weights or provide lane closures or

other such measures to protect the structural integrity of the Structure such that there can be continuous safe passage of trains until repairs are made.

BRIDGE ALTERATIONS:

Except as provided otherwise by this Agreement, there will be no alterations made to the Structure that will alter the railroad vertical or horizontal clearances provided by the original design. Pipelines will be not be added or attached to the Structure without first submitting plans and calculations to BNSF for review and approval.

APPENDIX B

(ENVIRONMENTAL COMMITMENTS RECORD)

Date: 11-25-14
CEQA/NEPA
CE/CE
Project Phase:
☒ PA/ED (*DED/FED*)
☐ PS&E Submittal
☐ Construction

ENVIRONMENTAL COMMITMENTS RECORD

The Rehabilitation and Widening of the Existing Bridge on Bear Valley Road over the Burlington Northern Santa Fe Railroad.

08-SBd-City of Victorville
Fed ID: BHLS 5380 026

Avoidance, Minimization, and/or Mitigation Measures	Page # in Env. Doc.	Environmental Analysis Source (Technical Study, Environmental Document, and/or Technical Discipline)	Responsible for Development and/or Implementation of Measure	Timing/ Phase	If applicable, corresponding construction provision: (standard, special, non-standard)	Action(s) Taken to Implement Measure	Measure Completed (Date and Initials)	Remarks	Environmental Compliance	
									YES	NO
Cultural Resources										
CR-1 If cultural materials are discovered during construction, all earth-moving activity within and around the immediate discovery area will be diverted until a qualified archaeologist can assess the nature and significance of the find.		Standard on Projects.	RE/Contractor	Construction	Standard Specifications 2010: Section: 14-2.02A Archeological Resources: General.		Contact Gabrielle Duff (909) 383-6933 or Gary Jones (909) 383-7505.			
CR-2 Section 5097.98 of the Public Resources Code and Section 7050.5 of the California Health and Safety Code protect Native American burials, skeletal remains and grave goods, regardless of age and provide method and means for the appropriate handling of such remains. If human remains are encountered, work should halt in that vicinity and the county coroner should be notified immediately. At the same time, an archaeologist should be contacted to evaluate the situation. If the		Standard on Projects.	RE/Contractor	Construction	Standard Specifications 2010: Section: 14-2.02A Archeological Resources: General. Health & Safety Code 7050.5 & Public Resource Code 5097		Contact Gabrielle Duff (909) 383-6933 or Gary Jones (909) 383-7505.			

Date: 11-25-14
CEQA/NEPA
CE/CE
Project Phase:
☒ PA/ED (*DED/FED*)
☐ PS&E Submittal
☐ Construction

ENVIRONMENTAL COMMITMENTS RECORD

The Rehabilitation and Widening of the Existing Bridge on Bear Valley Road over the Burlington Northern Santa Fe Railroad.

08-SBd-City of Victorville
Fed ID: BHLS 5380 026

Avoidance, Minimization, and/or Mitigation Measures	Page # in Env. Doc.	Environmental Analysis Source (Technical Study, Environmental Document, and/or Technical Discipline)	Responsible for Development and/or Implementation of Measure	Timing/ Phase	If applicable, corresponding construction provision: (standard, special, non-standard)	Action(s) Taken to Implement Measure	Measure Completed (Date and Initials)	Remarks	Environmental Compliance	
									YES	NO
human remains are of Native American origin, the coroner must notify the Native American Heritage Commission within 24 hours of such identification who will then notify the Most Likely Descendent (MLD). The person who discovered the remains will contact the District 8 Division of Environmental Planning; Gabrielle Duff, DEBC: (909)383-6933 and Gary Jones, DNAC: (909)383-7505, California Department of Transportation, District 8, so that they may work with the MLD on the respectful treatment and disposition of the remains. Further provisions of PRC 5097.98 are to be followed as applicable.										
Air Quality										
AQ-1: Use periodic watering for short-term stabilization of Disturbed Surface Area to minimize	55	Air Quality Report	RE/Contractor	Construction						

Date: 11-25-14
CEQA/NEPA
CE/CE
Project Phase:
☒ PA/ED (*DED/FED*)
☐ PS&E Submittal
☐ Construction

ENVIRONMENTAL COMMITMENTS RECORD

The Rehabilitation and Widening of the Existing Bridge on Bear Valley Road over the Burlington Northern Santa Fe Railroad.

08-SBd-City of Victorville
Fed ID: BHLS 5380 026

Avoidance, Minimization, and/or Mitigation Measures	Page # in Env. Doc.	Environmental Analysis Source (Technical Study, Environmental Document, and/or Technical Discipline)	Responsible for Development and/or Implementation of Measure	Timing/ Phase	If applicable, corresponding construction provision: (standard, special, non-standard)	Action(s) Taken to Implement Measure	Measure Completed (Date and Initials)	Remarks	Environmental Compliance	
									YES	NO
visible fugitive dust emissions. Use of a water truck to maintain moist disturbed surfaces and actively spread water during visible dusting episodes shall be considered sufficient to maintain compliance.										
AQ-2: Take actions sufficient to prevent project-related trackout, or visible bulk material deposited upon public roadways as a result of active operations.	55	Air Quality Report	RE/Contractor	Construction						
AQ-3: Cover loaded haul vehicles while operating on publicly maintained paved surfaces.	55	Air Quality Report	RE/Contractor	Construction						
AQ-4: Stabilize graded site surfaces upon completion of grading when subsequent development is delayed or expected to be delayed more than thirty days, except when such a delay is due to precipitation	55	Air Quality Report	RE/Contractor	Construction						

Date: 11-25-14
CEQA/NEPA
CE/CE
Project Phase:
☒ PA/ED (*DED/FED*)
☐ PS&E Submittal
☐ Construction

ENVIRONMENTAL COMMITMENTS RECORD

The Rehabilitation and Widening of the Existing Bridge on Bear Valley Road over the Burlington Northern Santa Fe Railroad.

08-SBd-City of Victorville
Fed ID: BHLS 5380 026

Avoidance, Minimization, and/or Mitigation Measures	Page # in Env. Doc.	Environmental Analysis Source (Technical Study, Environmental Document, and/or Technical Discipline)	Responsible for Development and/or Implementation of Measure	Timing/ Phase	If applicable, corresponding construction provision: (standard, special, non-standard)	Action(s) Taken to Implement Measure	Measure Completed (Date and Initials)	Remarks	Environmental Compliance	
									YES	NO
that dampens the disturbed surface sufficiently to eliminate visible fugitive dust emissions.										
AQ-5: Cleanup project-related trackout or spills on publicly maintained paved surfaces within 24 hours.	55	Air Quality Report	RE/Contractor	Construction						
AQ-6: Reduce non-essential earth-moving activity (i.e. grading, cut/fill) under high wind conditions. Wind gusts that exceed 25 mph or, on an hourly average, when wind speeds exceed 15 mph are considered high winds. A reduction in earth-moving activity when visible dusting occurs from moist and dry surfaces due to wind erosion shall be considered sufficient to maintain compliance.	55	Air Quality Report	RE/Contractor	Construction						

Date: 11-25-14
CEQA/NEPA
CE/CE
Project Phase:
☒ PA/ED (*DED/FED*)
☐ PS&E Submittal
☐ Construction

ENVIRONMENTAL COMMITMENTS RECORD

The Rehabilitation and Widening of the Existing Bridge on Bear Valley Road over the Burlington Northern Santa Fe Railroad.

08-SBd-City of Victorville
Fed ID: BHLS 5380 026

Avoidance, Minimization, and/or Mitigation Measures	Page # in Env. Doc.	Environmental Analysis Source (Technical Study, Environmental Document, and/or Technical Discipline)	Responsible for Development and/or Implementation of Measure	Timing/ Phase	If applicable, corresponding construction provision: (standard, special, non-standard)	Action(s) Taken to Implement Measure	Measure Completed (Date and Initials)	Remarks	Environmental Compliance	
									YES	NO
AQ-7 The Contractor must Implement and follow Fugitive Dust Control Best Management Practices (BMP's).		Standard on Projects.	RE/Contractor	Construction	Standard Specifications 2010: Section 14-9: Air Quality					
AQ-8 Implement and follow Erosion Control and Air Quality Best Management Practices (BMPs).		Standard on Projects.	RE/Contractor	Construction	Standard Specifications 2010: Section 14-9: Air Quality, Section 13: Water Pollution Control and Section 21: Erosion Control.					
CC-1: The project would incorporate the use of energy-efficient lighting, such as light emitting diode (LED) traffic signals. LED bulbs cost $60 to $70 each, but last five to six years, compared to the one-year average lifespan of the incandescent bulbs previously used. The LED bulbs themselves consume 10 percent of the electricity of	55 & 56	Air Quality Report	RE/Contractor	Construction						

Date: 11-25-14
CEQA/NEPA
CE/CE
Project Phase:
☒ PA/ED (*DED/FED*)
☐ PS&E Submittal
☐ Construction

ENVIRONMENTAL COMMITMENTS RECORD

The Rehabilitation and Widening of the Existing Bridge on Bear Valley Road over the Burlington Northern Santa Fe Railroad.

08-SBd-City of Victorville
Fed ID: BHLS 5380 026

Avoidance, Minimization, and/or Mitigation Measures	Page # in Env. Doc.	Environmental Analysis Source (Technical Study, Environmental Document, and/or Technical Discipline)	Responsible for Development and/or Implementation of Measure	Timing/ Phase	If applicable, corresponding construction provision: (standard, special, non-standard)	Action(s) Taken to Implement Measure	Measure Completed (Date and Initials)	Remarks	Environmental Compliance	
									YES	NO
traditional lights, which will also help reduce the project's CO2 emissions.										
CC-2: According to the Department's Standard Specifications, the contractor must comply with all local Air Quality Management District rules, ordinances, and regulations for air quality restrictions.	56	Air Quality Report	RE/Contractor	Construction						
Noise										
Noise-1 **The contractor shall comply with all local sound control and noise level rules, regulations and ordinances that apply to any work performed pursuant to contract.**		Standard on Projects.	RE/Contractor	Construction	Standard Specifications 2010: Section 14-8.02: Noise and Vibration.					
Noise-2 **Each internal combustion engine, used for any purpose on the job or related to the job,**		Standard on Projects.	RE/Contractor	Construction	Standard Specifications 2010: Section 14-8.02: Noise and Vibration.					

Date: 11-25-14
CEQA/NEPA
CE/CE
Project Phase:
☒ PA/ED (*DED/FED*)
☐ PS&E Submittal
☐ Construction

ENVIRONMENTAL COMMITMENTS RECORD

The Rehabilitation and Widening of the Existing Bridge on Bear Valley Road over the Burlington Northern Santa Fe Railroad.

08-SBd-City of Victorville
Fed ID: BHLS 5380 026

Avoidance, Minimization, and/or Mitigation Measures	Page # in Env. Doc.	Environmental Analysis Source (Technical Study, Environmental Document, and/or Technical Discipline)	Responsible for Development and/or Implementation of Measure	Timing/ Phase	If applicable, corresponding construction provision: (standard, special, non-standard)	Action(s) Taken to Implement Measure	Measure Completed (Date and Initials)	Remarks	Environmental Compliance	
									YES	NO
shall be equipped with a muffler of a type recommend by the manufacturer. No internal combustion engine shall be operated on the project without the muffler.										
Hazardous Waste										
HAZ-1: An asbestos containing materials and lead containing paint survey of the bridge structure will be required to obtain permits for the bridge demolition/modification, and should be performed prior to construction.	9	Initial Site Assessment	RE/Contractor	Construction						
HAZ-2: Underground Service Alert should be contacted for utility relocation.	9	Initial Site Assessment	RE/Contractor	Construction						

Date: 11-25-14
CEQA/NEPA
CE/CE
Project Phase:
☒ PA/ED (*DED/FED*)
☐ PS&E Submittal
☐ Construction

ENVIRONMENTAL COMMITMENTS RECORD

The Rehabilitation and Widening of the Existing Bridge on Bear Valley Road over the Burlington Northern Santa Fe Railroad.

08-SBd-City of Victorville
Fed ID: BHLS 5380 026

Avoidance, Minimization, and/or Mitigation Measures	Page # in Env. Doc.	Environmental Analysis Source (Technical Study, Environmental Document, and/or Technical Discipline)	Responsible for Development and/or Implementation of Measure	Timing/ Phase	If applicable, corresponding construction provision: (standard, special, non-standard)	Action(s) Taken to Implement Measure	Measure Completed (Date and Initials)	Remarks	Environmental Compliance	
									YES	NO
HAZ-3: If soil is to be exported from the site, the analytical data and a generator waste profile will be submitted to the potential recipient for review and approval prior to shipping any soil off-site.	3	Site Investigation Report	RE/Contractor	Construction						
Community Impact										
COM-1: **Emergency vehicle access would be maintained through traffic control and/or stage construction.**		Implemented by the City of Victorville and their Consultant.	RE/Contractor	Construction						
Water Quality										
WQ-1: For disturbed areas exceeding 1 acre national Pollutant Discharge Elimination System guidelines necessitate the development of a Strom Water Pollution Prevention Plan (SWPPP), unless the project qualifies for the EPA Small Construction Erosivity Waiver (SCEW), by the contractor. In the case the project qualifies for the SCEW, a Water Pollution		Implemented by the City of Victorville and their Consultant.	RE/Contractor	Construction						

Date: 11-25-14
CEQA/NEPA
CE/CE
Project Phase:
☒ PA/ED (*DED/FED*)
☐ PS&E Submittal
☐ Construction

ENVIRONMENTAL COMMITMENTS RECORD

The Rehabilitation and Widening of the Existing Bridge on Bear Valley Road over the Burlington Northern Santa Fe Railroad.

08-SBd-City of Victorville
Fed ID: BHLS 5380 026

Avoidance, Minimization, and/or Mitigation Measures	Page # in Env. Doc.	Environmental Analysis Source (Technical Study, Environmental Document, and/or Technical Discipline)	Responsible for Development and/or Implementation of Measure	Timing/ Phase	If applicable, corresponding construction provision: (standard, special, non-standard)	Action(s) Taken to Implement Measure	Measure Completed (Date and Initials)	Remarks	Environmental Compliance	
									YES	NO
Control Plan would be prepared in-lieu of the SWPPP to determine minimum control requirements.										
WQ-2: Best Management Practices (BMPs) would be implemented. BMPs include any facilities and methods used to remove, reduce, or prevent storm water runoff pollutants from entering receiving waters. Erosion control methods, temporary and permanent BMPs, and continuity of drainage facilities along the roadway would minimize impacts from storm water runoff. The SWPPP and NPDES-compliant measures would ensure no adverse impacts would occur to water quality associated with the project. Specific methods will include, but are not limited to: • Watering • Outlet Protection/Velocity		Implemented by the City of Victorville and their Consultant.	RE/Contractor	Construction						

Date: 11-25-14
CEQA/NEPA
CE/CE
Project Phase:
☒ PA/ED (*DED/FED*)
☐ PS&E Submittal
☐ Construction

ENVIRONMENTAL COMMITMENTS RECORD

The Rehabilitation and Widening of the Existing Bridge on Bear Valley Road over the Burlington Northern Santa Fe Railroad.

08-SBd-City of Victorville
Fed ID: BHLS 5380 026

Avoidance, Minimization, and/or Mitigation Measures	Page # in Env. Doc.	Environmental Analysis Source (Technical Study, Environmental Document, and/or Technical Discipline)	Responsible for Development and/or Implementation of Measure	Timing/ Phase	If applicable, corresponding construction provision: (standard, special, non-standard)	Action(s) Taken to Implement Measure	Measure Completed (Date and Initials)	Remarks	Environmental Compliance	
									YES	NO
Dissipation Devices • **Geotextiles, Plastic Covers & Erosion Control Blankets/Mats**										
Biological Resources										
BIO-1: **Prior to construction, a rare plant focused survey shall be conducted for desert cymopterus, sagebrush loeflingia, and beaver dam breadroot. Surveys should be conducted for cymopterus during April, sagebrush loeflingia during April-May, and beaver dam breadroot during April-May. Should surveys determine the presence of sensitive species within the BSA, specimens shall be ESA fenced or relocated as determined by the appropriate regulatory agency.**	5	NES(MI)	RE/Contractor	Construction						
BIO-2: **Erosion control or landscaping for this project shall not contain invasive species in the plant selections or seed mixtures.**	6	NES(MI)	RE/Contractor	Construction						

Date: 11-25-14
CEQA/NEPA
CE/CE
Project Phase:
☒ PA/ED (*DED/FED*)
☐ PS&E Submittal
☐ Construction

ENVIRONMENTAL COMMITMENTS RECORD

The Rehabilitation and Widening of the Existing Bridge on Bear Valley Road over the Burlington Northern Santa Fe Railroad.

08-SBd-City of Victorville
Fed ID: BHLS 5380 026

Avoidance, Minimization, and/or Mitigation Measures	Page # in Env. Doc.	Environmental Analysis Source (Technical Study, Environmental Document, and/or Technical Discipline)	Responsible for Development and/or Implementation of Measure	Timing/ Phase	If applicable, corresponding construction provision: (standard, special, non-standard)	Action(s) Taken to Implement Measure	Measure Completed (Date and Initials)	Remarks	Environmental Compliance	
									YES	NO
Construction equipment shall be cleaned before mobilizing to arrive at the project site and before leaving the project site.										
BIO-3: After completion of the project, all areas subject to temporary ground disturbances, including storage and staging areas, temporary roads, etc. must be returned to pre-construction conditions, and revegetated with native seeds to promote restoration of the area.	6	NES(MI)	RE/Contractor	Construction						
BIO-4: A preconstruction survey shall be conducted to find nesting birds and/or active burrowing owl burrows within a 500-feet-wide buffer zone around any potentially suitable habitat that will be used during construction activities. The burrowing owl survey shall be conducted in accordance to the CDFW Staff Report on Burrowing Owl Mitigation (CDFG 2012).	6	NES(MI)	RE/Contractor	Construction						
BIO-5: Project-related vehicles will observe a 20-mph speed limit in	6	NES(MI)	RE/Contractor	Construction						

Date: 11-25-14
CEQA/NEPA
CE/CE
Project Phase:
☒ PA/ED (*DED/FED*)
☐ PS&E Submittal
☐ Construction

ENVIRONMENTAL COMMITMENTS RECORD

The Rehabilitation and Widening of the Existing Bridge on Bear Valley Road over the Burlington Northern Santa Fe Railroad.

08-SBd-City of Victorville
Fed ID: BHLS 5380 026

Avoidance, Minimization, and/or Mitigation Measures	Page # in Env. Doc.	Environmental Analysis Source (Technical Study, Environmental Document, and/or Technical Discipline)	Responsible for Development and/or Implementation of Measure	Timing/ Phase	If applicable, corresponding construction provision: (standard, special, non-standard)	Action(s) Taken to Implement Measure	Measure Completed (Date and Initials)	Remarks	Environmental Compliance	
									YES	NO
all project areas, except on formalized roads. Off-road traffic outside of designated project areas should be prohibited.										
BIO-6: The project boundaries near the unnammed tributary shall be staked with a ESA fencing on the project-side of the channel to ensure equipment does not encroach into the channel.	6	NES(MI)	RE/Contractor	Construction						
Biological Permits										
NPDES	6	NES(MI)	RE/Contractor	Construction						

APPENDIX C

(CITY OF VICTORVILLE SECTION C-21 – SPECIAL CONDITIONS FOR TRAFFIC SIGNAL CONTROLLER UNITS, CABINETS AND AUXILIARY EQUIPEMENT)

SECTION C-21

CITY OF VICTORVILLE

SPECIAL PROVISIONS

FOR

TRAFFIC SIGNAL
CONTROLLER UNITS, CABINETS
AND
AUXILIARY EQUIPMENT

January 19, 2016

FOR USE IN CONJUNCTION WITH SECTION 86 OF THE
CALIFORNIA STANDARD SPECIFICATIONS
Index

Table of Contents

Special Provisions for Traffic Signal, Controller Units, Cabinets & Auxiliary Equipment

1. SOLID STATE TRAFFIC ACTUATED CONTROLLER
   - 1.1 General Description and Requirements
   - 1.2 Hardware Design Requirements – NEMA Controller
   - 1.3 Time Clock
   - 1.4 Clock/Calendar Programming Requirements
   - 1.5 Program Requirements
   - 1.6 Communications Port
   - 1.7 Coordination Control Hierarchy
   - 1.8 Preemption
   - 1.9 Detection Control
   - 1.10 Closed Loop Operation and Monitoring Software
   - 1.11 Traffic Surveillance Data Report
   - 1.12 Compatibility
   - 1.13 Spare Equipment
   - 1.14 Determination of Suitability
   - 1.15 After Sale Software and Firmware Changes and Upgrades
   - 1.16 After Sale Service

2. CABINET ENCLOSURE
   - 2.1 General Description and Requirements
   - 2.2 Load bay
   - 2.3 Police Panel
   - 2.4 Technician Test Panel
   - 2.5 Intersection Display Panel
   - 2.6 Hardware
   - 2.7 Wire Assemblies
   - 2.8 Flasher
   - 2.9 Load Switches
   - 2.10 Flash Transfer Relays
   - 2.11 Vehicle Detector Rack
   - 2.12 Fan and Thermostat Assembly
   - 2.13 Cabinet Lights
   - 2.14 Communications and Modem terminal blocks
   - 2.15 Detection Camera Terminal Panel
   - 2.16 Documentation
   - 2.17 Determination of Suitability
   - 2.18 Delivery

3. VIDEO DETECTION SYSTEM
   - 3.1 General
   - 3.2 Functional Capabilities
   - 3.3 Vehicle Detection
   - 3.4 VDP Hardware
   - 3.5 Single Point Interface Device with Ethernet
   - 3.6 Camera Units
   - 3.7 Installation
   - 3.8 Warranty
   - 3.9 Maintenance Support
   - 3.10 Determination of Suitability

4. EMERGENCY VEHICLE PRE-EMPTION SYSTEM
   - 4.1 General Description and Requirements
   - 4.2 Matched System Components
   - 4.3 System Component Specifications
   - 4.4 Reliability
   - 4.5 Qualifications
   - 4.6 Responsibilities
   - 4.7 Warranty

4.8 Certificate of Insurance
4.9 Certification
4.10 Current Project Requirements

5. CONFLICT MONITOR
5.1 General Description and Requirements
5.2 Features

6. TRAFFIC SURVEILLANCE EQUIPMENT
6.1 Four Port Video Server
6.2 Ethernet Pan/Tilt/Zoom Camera

7. INTERCONNECT COMMUNICATIONS EQUIPMENT
7.1 Ethernet Radio
7.2 Fiber Optic Cable,
7.3 Ethernet Communication over Copper Wire
7.4 Hardened Ethernet Switch
7.5 Serial Data Modem

8. UNINTERRUPTIBLE POWER SYSTEM
8.1 General Requirements
8.2 Operation
8.3 Description
8.4 Mounting/Configuration
8.5 Battery System
8.6 Electrical Specifications
8.7 Physical Specifications
8.8 Environmental Specifications
8.9 Battery Specifications
8.10 Communications, Controls & Diagnostics
8.11 Reliability
8.12 Options
8.13 Serviceability & Maintainability
8.14 Warranty
8.15 Manufacturer
8.16 Determination of Suitability

9. PEDESTRIAN EQUIPMENT
9.1 Not used
9.2 LED Pedestrian countdown Modules
9.3 Accessible Pedestrian Signal System (APS)

10. INTERSECTION LIGHTING (LED LUMINAIRE)
10.1 General Description and Requirements.
10.1 Specification
10.2 General Requirements
10.3 Technical Requirements
10.4 Quality Assurance
10.5 Warranty

11. INTERNALLY ILLUMINATED STREET NAME SIGNS (LED IISNS)
11.1 General Description and Requirements.

12. TURN-ON
12.1 General Description and Requirements.

.

1. SOLID STATE TRAFFIC ACTUATED CONTROLLER

General Description and Requirements

1.1.1 Traffic signal controllers, local masters and central computers shall include a standard communications protocol which meets or exceeds the requirements of AB3418 as specified by CALTRANS as well as the manufacturer's proprietary communications protocol. The equipment shall support both protocols simultaneously. No changes in hardware, firmware or software shall be required. The normal communications protocol shall be the default protocol enable on controller start up. The protocol shall include support for uploading system detector data using the optional message defined for that purpose. Contractor shall certify, in writing, that the controller software complies with this section.

1.1.2 This specification sets forth the minimum requirements for a shelf-mounted or rack mounted (to be specified) (16) sixteen-phase full-actuated solid state controller unit with internal Time-Based Coordination (TBC), railroad/fire (emergency vehicle) preemption, and closed loop secondary operation.

Hardware Design Requirements – NEMA Controller

1.2.1 The controller unit shall meet both the requirements of NEMA Standards Publications TS-2-1992 (TS 2), TS 3.4-1996 (TS-3.4), and TS 3.5-1996 (TS-3.5). TS-3.4 and TS-3.5 are also referred to as the National Transportation Communications for ITS protocol (NTCIP). In the event of conflict, difference, or discrepancy, these requirements shall govern. These specifications are applicable to either a TS 2 Type 1 interface or TS 2 Type 2 interface, as defined in the bid documents.

1.2.2 Each controller unit shall bear the manufacturer's name or logo, model number, date of manufacture and unique serial number permanently and neatly displayed on the front of the controller.

1.2.3 The controller unit shall be completely solid state and digitally timed. All user programmable functions may be entered via front panel keyboard entry, or remotely by use of interface software. Use of DIP or "pencil switches" within the controller is unacceptable. All timing shall be referenced to the 60 Hz power line operating frequency defined in TS-2 §2.1.3.

1.2.2.1 The overall physical dimensions of the controller unit shall not exceed 305 mm H, 440 mm W, 305 mm D.

1.2.2.2 Both TS 2 Type 1 and TS 2 Type 2 controllers shall be supplied with Port 1 SDLC and Port 2 RS-232 connections, as defined by TS 2 §3.3.1.1 and §3.3.2. Port 3 shall be capable of FSK modem communications with a DB9, 9-pin FSK connector, unless radio modem or fiber optic modem communications are specified in the plans. In that event, a DB9, 9 pin RS-232 or DB25, 25 pin RS 232, ST fiber, or RJ-11 standard data connectors shall be provided, as appropriate. The controller shall also be provided with a RJ45 port on the face and shall be Ethernet-enabled to allow communication across a TCP/IP network.

1.2.4 The controller unit design shall utilize one or more printed circuit boards (PCB's). All PCB's shall be silk-screened with component locations, the manufacturers name or logo, board part number, and revision level. All PCB's shall be designed to plug into or out of a motherboard or harness within the unit. The power supply, transformers, capacitors, and heat dissipating components are excepted from this requirement. The power supply shall be a linear style design.

1.2.5 The design shall allow for removal or replacement of PCB's without unplugging or removing other circuit boards.

1.2.6 The unit shall be designed so that one side of each PCB can be completely accessible for troubleshooting and testing the unit while it is still operating. This may be accomplished by aid of extender boards or cables. This requirement applies to only one circuit board at a time.

1.2.7 No more than two PCB's shall be attached to each other to constitute a circuit sub-assembly. Attaching hardware shall utilize captive nuts or a similar method to secure the boards together. The controller assembly shall be designed so that it can be tested and operated with the PCB's separated.

1.2.8 No circuit cuts shall be allowed on PCB's in any of the equipment supplied. Any wire jumpers included on circuit boards shall be placed in plated feed through holes that are specifically designed to contain them. Jumpers that are tack soldered to circuit traces, or are added to correct board layout errors, are unacceptable.

1.2.9 All IC's with 16 or more pins shall be mounted in machine tooled sockets. All sockets shall have two-piece, machined contacts and closed end construction to eliminate solder wicking. The outer sleeve shall be brass with tin or gold plating and tapered to allow easy IC insertion. The inner contact shall be gold finished, beryllium copper sub-plated nickel. All sockets shall have thermoplastic bodies meeting UL Specification 94V-0. Zero insertion force sockets will not be allowed.

1.2.10 Each of the following shall be simultaneously displayed during standard NEMA dual ring operation on the face of the unit:

1) Phase(s) in service (one per ring)
2) Phase(s) next to be serviced (one per ring)
3) Presence of vehicle call (one per phase)
4) Presence of pedestrian call (one per phase)
5) Recalls on vehicle phases (one per phase)
6) Reason for Green termination (one per ring)
(1) Gap-out
(2) Maximum time-out
(3) Force-off
7) Pedestrian service (one per ring)
8) Max II in effect (one per ring)

1.2.11 User programmed entries shall be stored and maintained in non-volatile memory. Battery power does not satisfy the requirements of this section.

1.2.12 The controller unit shall be designed to operate properly with the logic ground isolated from the AC neutral (common) power lead.

1.2.13 A high quality keyboard with a rated lifetime of 1×10^6 operations per key shall be provided on the front panel of the controller unit. The keyboard shall be used for programming all user-entered timings and settings.

1.2.14 A direct reading alphanumeric liquid crystal display with back lighting, minimum size of 40 characters by 4 lines, shall be provided on the front panel of the controller unit. The display shall be clearly readable in ambient light, internal cabinet light, full sunlight, or in absence of light from a distance of 1.0 meters at a 45° angle. The display shall have an automatic, user adjustable, time-out feature. The display shall remain clearly visible through the full TS-2 §2.1.5.1 operating temperature range of -34° C, to +74° C.

1.2.14.1 All I. C. chips shall be mounted in sockets. Dual-in-line (DIP) devices shall be mounted in military specification sockets, Augat part number 8xx-AG11D. All sockets shall have two-piece, machined contacts and closed end construction to eliminate solder wicking. The outer sleeve shall be brass with tin or gold plating and tapered to allow easy I.C. insertion. The inner contact shall be beryllium copper sub-plated with nickel and plated with gold. All sockets shall have thermoplastic bodies meeting UL Specification 94V-O. Each I.C. socket contact shall be plated with at least 50 microns of gold.

1.2.14.2 Controller software shall utilize flash prom memory storage technology to allow updates of software by uploaded and transferring the data via Port 1 or Port 2 on the front panel of the controller. New program updates shall not require the physical removal or exchange of any hardware items such as memory modules or integrated circuit chips, within the controller.

1.3 Time Clock

1.3.1 The clock shall use the sixty (60) Hz power line frequency as time base when AC power is present over the 89-135 VAC range defined by TS-2 §2.1.2. A super capacitor shall maintain the time-of-day clock and digital data during a power outage lasting up to 2 consecutive days. The use of batteries is unacceptable as means of compliance with this section.

1.3.2 The Time Base clock shall be maintained to within ± 0.005 % at 20° C and to within a ± 0.02 % over the full specified operating temperature range, as compared to Coordinated Universal Time (WWV) standard for a period of thirty days, during periods when AC power is not applied.

1.4 Clock/Calendar Programming Requirements

1.4.1 The clock shall be easily set to the year, month, day of month, day of week, hour, minute, and second.

1.4.2 Automatic Daylight Savings Time adjustment shall be a switchable keyboard menu option.

1.4.3 The dates for fixed and floating holidays and special events shall be keyboard user programmable.

1.4.4 Calendar adjustments for leap years shall be performed automatically by the controller.

1.4.5 The clock shall store sequences of operations in the form of 255 entries and 15 day plans.

Global Time Base Schedule					Actuated Traffic Signal Schedule
Entry	Months	Dates of Month	Days of Week	Day Plan	Time Base Actions
1	1-12	1-31	1-7	1-15	Entry 1 actions
:	“	“	“	“	:
255	“	“	“	“	Entry 255 actions

1.4.6 The structure and interrelationships of each type of program shall be in accordance with this section:

1.4.6.1 A day plan shall consist of the following:

Hour : Minute Action 1 (time to implement: action to implement)

: : :

Hour : Minute Action 10 (time to implement: action to implement)

Where each action is unique. There shall be a minimum of ten actions per day plan.
There shall be a minimum of 15 day plans.

1.4.6.2 Each action in a day plan shall consist of a group of the following objects:

- pattern (consisting of):

cycle length
offset
split
MUTCD flash (on/off)g
free operation

- sequence
- special functions 1-8 (on/off)
- auxiliary
- functions 1-3 (on/off)
- mode of operation (a means of changing operating modes by T.O.D.)
- max II
- gap/ext II
- phase omits

Any or all of these may be selected within a single action.

Transfer into and out of FLASH shall be in accordance with the USDOT MUTCD. It shall possible to program each phase and overlap to flash either yellow or red via keyboard entry. This shall be accomplished by flashing the loadswitch driver outputs simultaneously.

1.4.6.3 An Entry shall consist of time period implemented: day plan, month(s), date(s) of month, and day(s) of week.

1.4.6.4 A minimum of 100 Entries shall be keyboard programmable.

1.4.6.5 A copy feature shall allow the transfer of entries between day plans.

1.5 Program Requirements

1.5.1 Programming

1.5.1.1 Programming of the controller unit shall be by the use of the keyboard and display on the front of the controller unit. Navigating various features shall require only simple keystrokes, aided by full menu displays.

1.5.1.2 The menu structure shall be well organized for ease of programming. It shall contain a main menu, which contains keyboard options for all sections of the controller on one screen. Each option shall be selectable by either a numeric entry or combination cursor positioning and ENTER key entry. Each subsequent menu shall be a detailed breakdown of one of the previous menu options. Each menu option shall be a descriptive name to prompt the user to the desired section for programming. All entries shall be displayed and entered in plain English. Toggle type entries shall be set by entering YES/NO or ON/OFF responses. Non-alphanumeric symbols and abbreviations will not be used to display information. For example, phase start up interval cannot be represented by a 0 = green, 1 = yellow, etc. All entries must state Red, Yellow, etc. in plain alpha symbols. Numeric entries shall be in the Base 10 (decimal) number system. Entries in other number bases, such as hexadecimal or binary, are not acceptable.

1.1.5.3 A user selectable minimum four digit access code shall be an available option for securing access to timing and configuration of the unit. Display features shall be made available without the need to password access the unit. The controller unit shall be supplied with the code factory preset to be all zeros (0000).

1.1.5.4 Instructions for use or entry of the access code shall not be printed on the face of the controller.

1.1.5.5 A keyboard entered coded command (a series of commands or entries, not a single entry) shall be provided which will set all controller and TBC timings and entries to a default or inactive value. This coded command shall allow new values to be entered without first deleting prior entries.

1.1.5.6 With the intersection display active, a keyboard command shall enable the user to place a call to each phase individually.

1.5.2Phase Operation

1.5.2.1 In NEMA or STD8 operating mode, the controller unit shall accommodate a minimum sixteen (16) phases and sixteen (16) overlaps. The overlaps shall be designated as A, B, C, D, E, F, G, H, I, J, K, M, N, O, P, and K. All overlaps shall be programmable through the keyboard and shall function as described by TS 2 §3.5.8.

1.5.2.2 Each of the TS-2 timing intervals shall be programmable for a minimum of eight phases at a time from the same display screen, in a spreadsheet format. The display may be scrolled or paged down to display the next eight phase bank, additional intervals, or related information.

1.5.2.3 The controller unit shall have a copy mode, allowing the user to easily copy programmed interval information into remaining phases.

1.5.2.4 In addition to TS 2 Section 3 requirements, the following modes shall be available on a per phase basis:

1) Conditional Re-service
2) Walk Clearance through Yellow
3) Skip Red Interval if no call in Yellow
4) Red Rest
5) Max II
6) Allow conflicting phases, 2 entries per phase
7) Next Phase if power up in the Yellow Interval

1.5.2.5 The following configurations, as a minimum, shall be programmed within the controller unit and be user selectable:

1) User Mode defined by the operator
2) 8 Phase NEMA
3) 8 Phase Sequential
4) NEMA phasing to the left of barrier, sequential phasing to the right of barrier (Quad Sequential).
5) 4 Phase Diamond Interchange
6) 3 Phase Diamond Interchange
7) Separate Intersection – (2) four-phase intersections

1.5.2.6 The controller shall have a configuration which allows a minimum of 4 user programmable rings (compatibility lines, reference points to assure there shall be no concurrent selection and timing of conflicting phases).

1.5.2.7 The controller shall have programmable conflicting phase settings where simultaneous operation of compatible phases is not allowed.

1.5.2.8 A Phase Dynamic Maximum operation which increments the current maximum in programmable steps (Dynamic Max Step) in seconds to a maximum limit (Dynamic Max Limit) in seconds shall be provided. The operation shall function as defined by TS 3.5 §2.2.2.18.

1.5.2.9 The TBC shall select and coordinate reversible left turn sequence operations (dual leading, leading and lagging, or lagging and leading left turns). It shall be possible to transfer operation from one sequence to another at a preprogrammed time. Transfer shall take place at T_0 during coordination (see paragraph 2.7.4.2).

1.5.3 Coordination

1.5.3.1 A minimum of 64 timing patterns, each with a unique cycle length and offset combination, shall be available. Each of the 64 timing patterns will select one of the 16 possible split plans. Cycle length selections are to be each changeable from 30 to 255 seconds, in one-second increments. Phase split times and offset selections are to be adjustable from 0 to 254, in 1-second increments.

1.5.3.2 The coordinator shall reference a system-wide reference cycle timer (system cycle timer). The term T_0 shall refer to the point in the local cycle timer when the first coordinated phase (or leading coordinated phase if a pair of coordinated phases was selected by the user) is scheduled on for the first time. Note, this may not be the beginning of Green in the case of early return. The offset shall be the time in seconds that the local cycle timer lags the system cycle timer. For example, if the offset is +10 seconds, T_0 (the point at which the local cycle timer is at 0) will occur when the system cycle timer is at 10 seconds.

1.5.3.3 An entry shall be provided that will allow the automatic modes of coordination to reference either the beginning of the coordinated phase to local cycle zero or reference the end of the coordinated phase to local cycle zero.

1.5.3.4 The controller shall contain the two modes of automatic coordination programming, fixed and floating force off modes, as required by TS-3.5 §2.5 / NTCIP entries. The following information shall be all that is required from the user to establish a pattern:

1) Basic NEMA controller timing
2) Cycle length in seconds
3) Desired phase sequence for the particular pattern
4) Total seconds of the cycle that a phase is to be active, including green, amber and red clearance times when there is constant demand on all input detectors
5) The coordinated phase or phases (from section 2.7.4.9 below).
6) The offset of the first coordinated phase serviced in the sequence from the reference clock's T_0 in seconds
7) Cycle length in seconds.

1.5.3.5 Using the above information in fixed force-off mode, the coordinator must perform the following functions for each pattern.

1) Guarantee the coordinated phase(s) programmed time will be serviced in their entirety to achieve coordination between intersections (when not correcting). The programmed time of the first coordinated phase in the phase sequence shall start at T_0.
2) Calculate each phase's force off point (the point at which a phase's Green must terminate, in order to not violate the following phases' programmed times).
3) Calculate the beginning of each phase's permissive window (the point in the cycle when the coord phase is allowed to yield to each corresponding phase).
4) Calculate the end of each phase's vehicle permissive window (the point proceeding a phase's force off point by its minimum time and the prior phase's clearance time). Any phase receiving a vehicle call before the end of vehicle permissive window will be serviced during the current cycle.
5) Calculate the end of each phase's pedestrian permissive window (the point preceding a phase's force off point by pedestrian Walk and pedestrian clearance times and the prior phase's clearance time). Any pedestrian call received by a phase before the end of pedestrian permissive window will be serviced during the current cycle up to the beginning of the phase vehicle green.
6) Guarantee that each phase's programmed time is serviced in full if a call was received before the beginning of permissive window, and the phase does not terminate due to Gap out.

1.5.3.6 Using the same information in floating force-off mode, the coordinator must operate in the same manner as fixed force-off mode, except that if a non-coordinated phase is entered early, it will remain active only for the time programmed in the split time. Automatically setting the max timer in each split to accomplish this function is acceptable.

1.5.3.7 Once the user-selectable data for phase service is entered, the controller unit shall test the plan to insure that the plan does not violate any minimum times based on the specified numbers and cycle length. If a faulty plan is detected, the controller unit shall show an error code indicating the problem. If the error is not corrected, the controller unit shall run in free operation mode whenever the erroneous plan is selected. If actuated pedestrian movements are programmed, the coordinator shall ignore errors detected due to the pedestrian Walk and clearance times violating the phase split time for any actuated pedestrian. The controller must have a diagnostic screen that lists any of the TS 3.5, §2.5.11 status reasons for free mode operation and must also have a diagnostic status screen. The diagnostic screen shall include all relevant information about the failure that resulted in free mode operation. As an example, if the cycle length does not equal to the sum of the splits, then the indication would be cycle failure and the sum of the splits would be displayed.

1.5.3.8 The coordinator shall be programmable to seek offsets by short-way (lengthening or shortening the cycle lengths). Shortening will have a 0 to 25% entry and lengthening will allow for a 0 to 50% entry. The controller will also contain a dwell method of coordination which will allow the controller to stop at local cycle zero until the offset entry is satisfied. A dwell time entry will also be available which will limit the amount of time the controller stops at local zero.

1.5.3.9 The controller unit coordination program shall be designed to be programmed from the front panel to emulate the operation of a pretimed controller by recall for applications where no vehicle detection is provided.

1.5.3.10 For each configuration, a coordinated phase must be selected from Ring 1. A coordinated phase must also be selected from other rings if a compatible phase with the Ring 1 coordinated phase exists. The coordinated phase, or phase pair, shall be selectable from one of the individual phases or phase pairs shown in this table:

CONFIGURATION				
Coordinated Phases (s)	8 Phase NEMA Dual ring and 3Φ diamond	Quad Sequential	8 Phase Sequential	4Φ Diamond
Individual	--	4 or 8	2, 4, 6, or 8	
Pairs	2 & 6 or 4 & 8	2 & 6	--	2 & 5, 4 & 5 1 & 6, or 1 & 8

If lead lag operation is selected, then during normal (8) phase operation only one phase needs to be selected as the coordinated phase. Compatible phase pairs shall not be forced to begin simultaneously.

1.5.3.10 When establishing its offset from the reference point for external coordination, the coordinator shall reference only the leading edge of the sync pulse, regardless of its width.

1.5.3.11 The internal coordination and upload/download programs shall not interfere with normal intersection operation except when changing ring structure in the controller or active phases. These operations (changing ring structure and active phases) shall require a confirmation and put the controller in a flash condition and a restart sequence. The implementation of revised timing parameters loaded into the timer shall be programmed to occur only at points in the controller coordination cycles which do not alter the controller phase sequence. The controller unit may temporarily drop out of synchronization during the upload/download, but must continue to operate.

1.5.3.12 Time-Based Coordinator (TBC)

1.5.3.12.1 The TBC shall allow the features and operations specified in 2.6.7.2 under time of day (T.O.D.) control.

1.5.3.12.2 The internal reference sync pulse, from which the local offset is calculated, shall resync at midnight, or the resync shall be user programmable with a default to midnight. A pulse shall be generated whenever the Time-of-Day Clock shows a time, which is an exact multiple of the current cycle length after this resynchronization. In case of a power failure, resync shall be calculated from the programmed resync time. The power failure recovery routine shall accommodate the case of a power failure at midnight.

1.5.3.12.3 An entry shall exist to change the reference by minutes from midnight.

1.6 Communications Ports

1.6.1 Each of the TS-2 specified ports shall have a selectable baud rate from 600 baud, to 57.6 kilobaud.

1.6.2 A RJ45 Ethernet port shall be provided on the face of the controller to enable connectivity between an Ethernet switch and the controller.

1.6.3 A USB port shall be provided.

1.7 Coordination Control Hierarchy

1.7.1 When the system switch is in the closed loop position, the controller unit shall be under the control of either the central computer, or an on-street master controller.

1.7.2 In the absence of any on-line Closed Loop System control by a central computer, or on-street master controller, the internal TBC shall control the coordinated, free, and flash operation of the intersection

1.7.3 When a master controller or central computer brings the intersection on-line, its control shall supersede that of the internal time base coordination.

1.7.4 When the system switch is in the FREE position, the controller unit shall operate in a non-coordinated (free) mode.

1.8 Preemption (PE)

1.8.1 The internal preemptor supplied shall be user programmable for priority preemption in the minimum sequences outlined in the following order: railroad (1 train sequence), emergency vehicle (4 high priority sequences), and bus/transit (4 low priority sequences). Each preemption sequence shall have separate timing intervals. A decoded input to the controller shall be provided to discriminate the priority level. A steady state low level input is defined as a high priority signal, and a pulsing low level input is defined as a low priority signal.

1.8.2 Phases shall be selectable such that a limited signal sequence may be operational during preempt (PE). It shall be possible to add phases to this special limited sequence, which are not in the intersection sequence, without needing to add external logic.

1.8.3 The following intervals shall be provided as a minimum. While in preemption, the display will clearly identify the intervals being timed as preempt intervals. Yellow and red clearances from the phase timings may be utilized in place of the clearance intervals shown.

1.8.4 Preemption Timing Interval Definition

All intervals are sequential.

0. **PE Delay** - This time shall start immediately when the preempt command is received. It shall not affect the normal operation of the controller unit until the delay time out occurs. This interval may be used for emergency vehicle (fire lane) preemption delay. If 0 (zero) time is set, the interval shall be omitted.
1. **PE Minimum Duration** - The preempt sequence shall not terminate until the preempt input signal is removed and the Minimum Duration time has expired.
2. **PE Minimum Green** - Any vehicle signal that is Green at the time this interval becomes active shall not terminate unless it has been displayed for at least the time programmed in this interval. If 0 (zero) time is set, the interval shall be omitted.
3. **PE Minimum Walk** - Preempt Minimum Walk Time in seconds. A preempt initiated transition shall not cause the termination of a Walk prior to its display for this period.
4. **PE Ped Clearance** - At the time of preempt call, WALK indications shall immediately change to Pedestrian Clearance interval. The Pedestrian Clearance interval shall not terminate unless it has been displayed for at least the time programmed in this interval. If 0 (zero) time is set, the interval shall be omitted.
5. **PE Track Green** - Signals programmed as track (or fire lane) signals shall remain Green or be changed to Green. All other signals shall be red. This interval shall be optionally programmable to zero during emergency vehicle PE.
6. **PE Dwell Green** - Minimum Dwell Time in seconds. This parameter controls the minimum timing for the dwell movement. The phase(s) allowed during the Dwell interval shall be selectable to include all phases that do not cross the track. The Dwell interval shall not terminate prior to the completion of Preempt Duration Time, Preempt Dwell Time, & the call is no longer present. Each signal shall be keyboard programmable for red, red flash, yellow flash or Green. As an alternative, a limited cycle shall be programmable for use with railroad preempts.
7. **PE Exit Ped Clear** - Preemption Exit Pedestrian Clear Time in seconds. This parameter controls the pedestrian clear timing for a Walk signal transition to the Exit Phase(s).
8. **PE Exit Yellow** - This interval shall provide a solid yellow clearance for indications that were green or flashing yellow. Red and flashing red displays shall display solid red.
9. **PE Exit Red Clearance** - This interval shall be an all red clearance in preparation for return to the normal cycle. Return phases shall be programmable from the keyboard.
10. **PE Max Call** - This interval is the amount of time that a preempt call may remain active and be considered valid. When the preempt call has been active for this amount of time, the controller shall return to normal operation. The preempt call shall be considered invalid until the call is no longer active.

1.8.5 Preempt Timing Interval Ranges

TIMING INTERVAL	TIME (Seconds)	INCREMENTS (Seconds)
0. PE Delay (Emergency vehicle preempt)	0-999	1
1. PE Minimum Duration	0-999	1
2. PE Minimum Green	0-255	1
3. PE Minimum Walk	0-255	1
4. PE Ped Clearance	0-255	1
5. PE Track Green	0-255	1
6. PE Dwell Green	1-255	1
7. PE Exit Ped Clear	0-255	1
8. PE Exit Yellow	3.0-25.5	0.1
9. PE Exit Red Clearance	0-25.5	0.1
10. PE Max Call	0-999	1

1.8.6 The phases to be serviced following the preempt sequence shall be front panel keyboard programmable.

1.8.7 Preempt sequences shall be selectable using external inputs. Preempt priority shall be assigned with #1 being the highest. If a higher priority preempt input is received during a preempt sequence, the controller unit shall immediately transition to the new sequence, subject to the constraints of PE Minimum Green and PE Minimum Walk. Provisions shall be made to clear two conflicting track phases from a single preempt input. This may be provided by two track clearance phases for a single preempt, or by combining two preempts.

1.8.8 Preempt 1 shall be reserved for a priority railroad preempt. If more than two preempts are provided, it shall be possible to delete the priority override for all but the railroad preempt. If a lower priority preempt is activated during another preempt cycle, the one in progress shall continue through its entire cycle. If the second preempt input is still active when the first one is completed, the controller unit shall then initiate the low priority preempt. When all preempt inputs are removed, the controller unit shall proceed through the normal sequence to Return Red Clearance (Interval 9).

1.8.9 Once the controller unit has entered the first timed interval following Preempt Delay (Interval 1), the sequence shall continue to the end even if the preempt call is dropped. If the call returns and extends beyond the Minimum Preempt Duration (Interval 1), the controller should reinitiate track green and complete the preempt sequence.

1.8.10 The controller unit shall be programmable to be in flash, or in limited sequence, during interval 6. If flash is specified, the phases shall flash yellow or red, as user programmed. Flash shall be implemented by simultaneously flashing the appropriate loadswitch driver outputs. If limited sequence is selected, all phases shall be programmable, even if not normally used in the intersection sequence.

1.8.11 Should a preempt command be present, after power restoration following an electrical outage, the controller shall power up in cabinet flash operation and remain in such state until the PE command is removed.

1.8.12 Overlap phases shall begin and terminate with the parent phases, as described in TS 2. If the PE call occurs during yellow or red displays between parent phases, the overlap phase shall display a minimum of 3 seconds of yellow and a minimum of 1 second of red clearance.

1.8.13 Don't Walk shall be displayed throughout the preempt sequence unless a limited cycle is run. During a limited cycle (Interval 6), the pedestrian heads may be programmed to be dark.

1.8.14 Preempt routines shall have priority over all controller functions.

1.8.15 The controller shall be programmable to allow multiple track clearance phases either within a single preemption sequence, or by mapping multiple preempts together in all modes of operation.

1.8.16 The controller will have an entry that allows it to coordinate during limited sequence operation. When operating in this mode, the controller will perform a soft transition to the preemption return phases.

1.9 Detection Control

1.9.1 The controller shall have provisions for up to 64 combination vehicle or bicycle actuated input channels, when utilizing data Bus Interface Units (BIUs) within a TS-2 Type I standard cabinet, or up to 32 actuated input channels, without utilizing BIU's, within a TS-1 standard cabinet. The controller shall allow user defined programmable mapping of the detector channels to reduce or eliminate the need to rewire a TS-1 standard cabinet in order to utilize all 32 detector channels.

1.9.2 All detection channels shall be capable of reporting volume and occupancy, at an interval of up to 99 minutes in one-second increments.

1.9.3 All detection channels shall be capable of reporting alarms based upon the following incidents, as prescribed by TS 3.5, chapter 2.3.

1) Maximum Presence, No Activity, Erratic Counts
2) When operating with BIUs: Open Loop, Shorted Loop, 25% Inductance Change, Watchdog Fault

1.9.4 All detection channels shall be individually assignable to any phase, or unassigned. Assignment arrangement shall not alter the ability of any channel to collect data or report alarms.

1.9.5 All detection channels shall have the following features, as defined by TS-3.5, chapter 2.3:

1) Call Phase Assignment
2) Switch Phase Assignment
3) Passage Detector Assignment
4) Queue Detector Operation
5) Delayed Detector Operation
6) Extended Detector Operation
7) Yellow Locking
8) Red Locking

1.9.6 All detection channels shall have the following enhanced features to govern both operation and data collection.

1) Delay Inhibit Phases
2) Occupancy on Green
3) Occupancy on Yellow

1.9.7 All features on all detection channels shall be capable of simultaneous operation. Features and their operation shall not be limited to a subset of detectors.

1.10 Closed Loop Operation and Monitoring Software (CLS)

1.10.1 Short haul FSK modems, necessary to operate the controller as a Closed Loop System secondary, shall be provided internal to the timer. All necessary cables and communication ports needed for operation in a Closed Loop System cabinet shall be provided. The modem equipment shall meet the same TS 2 environmental requirements as the controller.

1.10.2 The controller shall have internal software that allows the following functions and features.

1) Monitoring of signal indications, detectors, alarms, and time base functions
2) Controller database error checking
3) Coordination parameters
4) Remote resetting of coordination errors

5) Toggling special function outputs from the controller
6) Allow the central system to receive reports and alarms generated from the controller.
7) Accommodate connection of a dial-up modem to the controller to accomplish remote operation through the controller or the PC based software.

All capabilities from the controller keyboard shall be capable remotely through a computer interface through a communications modem connection.

1.10.3 The controller shall allow any of its detector inputs to be used with the system operation. The system shall report volume and occupancy counts based on a user-selectable time period for each detector. Storage of this data may take place at either the local or master controller, as specified within TS-3.4.

1.11 Traffic Surveillance Data Report

1.11.1 The Master controller shall have an integral traffic surveillance reporting capability as a standard feature. This surveillance capability shall be available independent from any system operation considerations. It shall be possible to obtain volume and occupancy data from all system detectors for a total of 16 sampling channels. 72 sampling periods shall be provided with a selectable duration from 1 to 255 min. (After 72 periods, as each new sampling period is recorded the oldest data shall be discarded). Surveillance data may be retrieved remotely, through a modem, to a central office computer.

1.11.2 The report generated shall provide the following data for each of the latest 72 sampling periods:

1. Time of sampling, including year, month, day, hour, minute.
2. Master program number and selection basis (TOD or TRAFFIC RESPONSIVE)
3. Intersection plan number, dial, split and offset in effect at the time of sample.
4. Coord status.
5. Flash status.
6. VOLUME and OCCUPANCY data from each of the 16 system detectors.

1.12 Compatability

The Master controller shall be fully compatible and provide direct interface with, and direct control of, intersection controllers furnished under these Special Provisions. This shall be accomplished without internal or external modification to the Master or the intersection controllers. All units shall be compatible and fully functioning with the existing City of Victorville Signal System.

1.13 Determination of Suitability

Any manufacturer of traffic signal control equipment or controller cabinets to be supplied under these Special Provisions shall provide a field and factory demonstration of the equipment proposed to be supplied. The demonstration shall be of equipment that has operated satisfactorily in accordance with specifications for a minimum of 180 calendar days subsequent to final acceptance by the jurisdiction to which it was supplied. This equipment shall have been performing those functions proposed under this contract. The demonstration shall be to two members of the City of Victorville Engineering Department designated by the City Traffic Engineer. The two person review team will determine the suitability of the equipment and their report shall be the final authority for determination of suitability of the proposed equipment. All expenses incurred in providing these demonstrations shall be the responsibility of the manufacturer of the proposed equipment. Naztec Model 980 ATC Traffic Controller with Ethernet & USB shall be acceptable or pre-approved equal.

1.14 After Sale Software and Firmware Changes and Updates

All software and firmware changes and updates applicable to equipment furnished under these Special Provisions shall be furnished for and/or installed in equipment at no cost to the City for a period of 24 calendar months from the date the equipment is placed in operation.

1.15 After Sale Service

In addition to all other warranties or guarantees which may be offered by the terms or conditions of these Special Provisions, the manufacturer of the equipment shall provide field service for correction of manufacturing defects or deficiencies at no cost to the City for a period of 24 calendar months from the date the equipment is placed in operation for all equipment furnished under these Special Provisions.

2. CABINET ENCLOSURE

2.1 The cabinet shall be fabricated from sheet aluminum, minimum thickness of 0.125 inches, type 5052-H32.

2.2 The dimensions shall be 75"H x 44 ½"W x 26"D, Type "R" cabinet.

2.3 All interior seams shall be continuously welded.

2.4 No vertical seams shall be allowed, except for the corners. The cabinet side walls and back shall be fabricated of one continuous piece of sheet aluminum.

2.5 The roof shall be fabricated of one continuous piece of sheet aluminum and shall incorporate a plenum to which the fans will be mounted from the inside of the cabinet to provide forced air ventilation. Continuous corner welds shall be allowed. The ventilation exhaust opening of the unit shall be underneath the front overhang and shall have a screen. The roof section shall be welded to the main cabinet body.

2.6 The cabinet interior and exterior shall have a factory applied corrosion resistant prime coat and baked enamel finish coat. Cabinet interior to be white. Cabinet exterior to be desert beige. Service or other cabinets furnished under this contract shall be the same color.

2.7 The cabinet shall be base mounted and have 4 mounting holes on the bottom of the unit. The mounting holes will be at 40-3/4" center to center in width, and 18-1/2" center to center in depth.

2.8 The main door of the cabinet shall include a police door. Both the main door and police door shall be supported by stainless steel hinges.

2.9 The main door shall be equipped with a three point latching mechanism, fabricated from heavy gauge steel with steel locking rods and twin nylon rollers. This mechanism is to be cadmium plated. The main door shall be provided with **two (2)** factory installed door stops to securely hold the door open at 90 degrees, 120 degrees and 180 degrees. The door stops shall be installed as to not interfere with access to the cabinet interior. The stops shall sustain function under 80 M.P.H. wind loading.

2.10 Included with the main door shall be a replaceable polypropylene mesh air filter, 12" x 16", which shall be located behind the louvered vents and secured with holding clips.

2.11 Door handle shall be made of 3/4" cold rolled round stock stainless steel and have a provision for padlocking.

2.12 Four shelves shall be included, and shall be of sufficient depth to store equipment.

2.13 Shelves shall be at least 10 ½ inches deep and be located in the cabinet to provide a ½ inch clearance between the back of the shelf and the back of the cabinet. A 1 ½ inch drawer shall be provided in the cabinet, mounted directly beneath the controller support shelf. This drawer shall have a hinged top cover and shall be capable of storing documents and miscellaneous equipment. This drawer shall support up to 50 pounds in weight when fully extended. Drawer shall open and close smoothly. Drawer dimensions shall make maximum use of the available width and depth offered by the cabinet and controller shelf.

2.14 All mounting hardware used in the cabinet, whether it is used to secure equipment or some portion of the cabinet itself shall be stainless steel or nickel plated brass.

2.15 The cabinet shall be supplied with a standard #2 lock for the main door and a standard police lock for the police door, two keys for each type lock are to be included.

2.16 The cabinet shall be wired to provide an event monitor signal to the controller whenever the cabinet door is opened.

2.17 The cabinet shall be wired to provide communication between Opticom discriminator cards and the controller.

2.18 The cabinet shall be wired to provide communication between the conflict monitor and the controller.

2.2 Loadbay

2.2.1 The loadbay shall be wired for full 8 phase operation, in an 8 phase quad configuration and shall accommodate a minimum of 14 loadswitch positions for the following:

8 Vehicular Phases
4 Pedestrian Phases
2 Overlaps

The loadbay shall also be wired for a 12 channel conflict monitor, which will be wired to monitor all yellow, green and walk intervals.

2.2.2 The loadbay shall also include the 3 NEMA connector harnesses as well as the 4th connector harness for coordination, preemption and special function I/0.

2.2.3 The loadbay shall incorporate a swing down design to facilitate ease of maintenance and repair. It shall also have service loops with sufficient slack to allow for the loadbay to swing down without any of the harnesses being unsecured.

2.2.4 The loadbay shall be located in front of the rear wall.

2.2.5 All terminal blocks shall be marked with a black on white letters or numbers. All terminal blocks mounted horizontally shall have vertical numbers or letters reading from left to right. All terminal blocks mounted vertically shall have vertical numbers or letters reading from top to bottom. Any terminal block having one or more of the buss removed shall be marked with an "A" and "B" side. On the horizontally mounted terminal blocks the "A" side shall be the upper set of screws and the "B" side the lower set of screws. The "A" - "B" letters shall be vertical and read from top to bottom. On the vertically mounted terminal blocks the "A" side shall be the left side and the "B" side the right side. The "A" - "B" letters shall be mounted over the terminal block mounting hole by two #8-32 screws in the tapped holes provided. Labeling shall also be provided within the controller cabinet to identify receptacles for relays and shelves supporting all removable control equipment, contactors, switches, fuses, circuit breakers, and all other equipment. Loadbay locations shall be labeled front and rear.

2.2.6 Flash relays will be wired de-energized during the normal operational mode of the intersection. The flash relays will become energized only on command of flash via manually or via the conflict monitor.

2.2.7 The loadbay shall have a conflict monitor interlock circuit which will allow the conflict monitor to be removed without the intersection going to flash, only while the main cabinet door is open. This feature is to be enabled via a door switch and a relay. This circuit will also allow the intersection to operate in a normal mode. In the event that the conflict monitor is accidentally not replaced, upon closure of the door this circuit will place the intersection in flash.

2.2.8 The loadbay shall be of such design that only the low voltage portions of the assembly may incorporate printed circuit board technology. All remaining high voltage and load carrying circuits shall be hard wired.

2.3 Police panel

2.3.1 The police panel shall include switches for the following:

Auto/Flash
Signals - On/Off

2.3.2 The Signals – On/Off switch shall be wired to kill power to the field wiring even when the cabinet in on UPS/Battery power.

2.3.3 The panel shall be located behind the police door on the main door of the cabinet. No wiring transmission to the switches shall be exposed.

2.3.4 The main power switch shall be a 50 amp circuit breaker.

2.4 Technician Test Panel

2.4.1 The technician test panel shall have switches for the following:

Flash/Automatic
Automatic/Stop Time
Controller Power - On/Off

2.5 Intersection Display Panel

2.5.1 An intersection display panel shall be mounted in the inside of the cabinet door. The display panel shall have minimum dimensions of 14" W X 9" H and labeled as in Appendix I.

2.5.2 The display indicators shall be placed in the display to reflect a typical eight-phase intersection. All symbols and legends indicated on the figure referenced in Appendix I shall be silk-screened onto the display panel.

2.5.3 The indicator lights shall be high brightness LED's of the appropriate color for the indication being represented. Vehicle detector LED's shall be yellow. The LED's shall have a minimum luminous intensity of 40 mcd @ 20 mA. The view angle of each LED shall exceed 35 degrees.

2.5.4 The intersection display panel shall have three position detection switches oriented with each vehicle and pedestrian phase indicator lights and for all preemption sequences. In the "up" position a constant call shall be placed. In the "center" position normal operation shall take place. In the "down" position a momentary call shall be placed.

2.5.5 There shall be a door switch that will turn on power to the display panel when the door is open. When the door is shut, the switch shall remove power to the indicators.

2.5.6 The display shall monitor the input side of the load switches. Interference circuitry between the load switch input and the display panel shall be designed for minimum loading of the load switch input pin.

2.5.7 The display shall be powered by a separate DC power supply. The display shall be sized for the voltage and current appropriate for the panel design but the supply voltage shall not exceed 28 V DC. The power supply shall be fused on the input and output sides.

2.5.8 Wiring to display panel shall be sheathed in nylon mesh sleeving.

2.6 Hardware

2.6.1 All hardware in this cabinet, whether it be for mounting or for termination shall be stainless steel or nickel plated brass.

2.6.2 All sheet metal products incorporated in this cabinet are to be aluminum, and shall be a minimum thickness of .090 inches, and are to be finished to prevent oxidation.

2.6.3 All termination points and assemblies are to be clearly marked and identified and shall correspond to the cabinet wiring print.

2.7 Wire Assemblies

All wire assemblies connecting one panel to another, and all harness shall be encased in a braided nylon sleeve. Cables are exempt from this requirement. Spiral wrap shall not be permitted.

2.8 Flasher

The flasher shall be NEMA, and shall be two circuit with indicator lights. The unit shall be rated for 15 amps per circuit, through the entire NEMA temperature range.

2.9 Loadswitches

2.9.1 The loadswitches shall be NEMA, and shall have indicator lights that show the input and output side of the relay. The unit shall be rated for 10 amps per circuit, through the entire NEMA temperature range.

2.9.2 All loadbays shall be furnished fully equipped with solid state loadswitches in each socket in accordance with the provisions in Section 86 of the Standard Specifications, and these Special Provisions.

2.10 Flash Transfer Relays

2.10.1 The flash transfer relays shall be Caltrans Type 430. Five each shall be supplied with each cabinet.

2.11 Vehicle Detector Rack

2.11.1 A fully wired detector rack shall be provided. It shall provide space for a minimum of twelve 2- or 4 channel vehicle detector amplifiers as well as space for two (2) Pre-empt discriminator cards. The detector rack shall be wired according to the rack diagram.

2.11.2 A separate cable shall be wired into the cabinet to provide detector inputs into the cabinet compatible with the *Iteris* Vantage plus Unit. Cable also known as an I.O.32/D37 Subminiature Cable.

2.11.3 A slot shall be provided for a BIU. It may be in the Vehicle detector rack or be mounted separately. It shall be configured and wired to accept a standard BIU communication device.

2.12 Fan and Thermostat Assembly

2.12.1 The fan and thermostat assemblies shall be located on the top inside of the cabinet, and shall be attached to the plenum.

2.12.2 The fans shall be rated at 100 CFM minimum and shall have ball bearings. Sleeve bearings are expressly forbidden.

2.12.3 The fans shall have screened covers.

2.12.4 The thermostats shall be 120 VAC and have a temperature rating of 70 to 120 degrees Fahrenheit.

2.12.5 An RC network shall be provided across the positive and negative inputs to the fans.

2.12.6 Two complete fan assemblies shall be furnished in each cabinet. Each fan shall be controlled by a separate thermostat.

2.13 Cabinet Lights

2.13.1 The cabinet interior illumination shall be Light emitting diode, and shall be UL approved.

2.13.2 The illumination shall be an equivalent of a minimum 15 watt output.

2.13.3 At least one fixture shall be mounted on the underside of the roof plenum towards the front, and shall be controlled by a door switch which is activated when the main cabinet door is opened.

2.14 Communications and Modem terminal blocks

2.14.1 All terminal blocks and connection cables to connect controller modem to and/or interconnect cable shall be furnished in each cabinet supplied under these Special Provisions.

2.14.2 Corning Lanscape CCH-02U Closet Connector Housing shall be installed in controller cabinet with 4-ea, SC connector panels.

2.15 Detection Camera Terminal Panel

2.15.1 A panel shall be installed to terminate all coax and power cables for the Video Detection cameras. Power terminations shall be individually fused or circuit breaker protected.

2.16 Documentation

2.16.1 All cabinet wiring shall be incorporated into one (1) schematic drawing. Multiple drawings shall not be allowed. Three of these drawings shall be provided with each cabinet. A reproducible original shall also be furnished.

2.16.2 Drawings shall indicate the intersection name, intersection phasing and detector assignments. The particular information regarding each intersection shall be given the successful bidder by the City.

2.16.3 Operational/repair manuals on each different piece of equipment shall be provided with each cabinet.

2.16.4 All drawings referred to above shall be furnished to the City on Compact Disk (CD) or Portable USB “Flash” memory device suitable for use on the City autocad system.

2.17 Determination of Suitability

Any manufacturer of traffic signal control equipment or controller cabinets to be supplied under these Special Provisions shall provide a field and factory demonstration of the equipment proposed to be supplied. The demonstration shall be of equipment that has operated satisfactorily in accordance with specifications for a minimum of 180 calendar days subsequent to final acceptance by the jurisdiction to which it was supplied. This equipment shall have been performing those functions proposed under this contract. The demonstration shall be to two members of the City of Victorville Engineering Department designated by the City Traffic Engineer. The two person review team will determine the suitability of the equipment and their report shall be the final authority for determination of suitability of the proposed equipment. All expenses incurred in providing these demonstrations shall be the responsibility of the manufacturer of the proposed equipment.

2.18 Delivery

Notification shall be made to the City of Victorville Engineering Department Traffic Signal Maintenance Division (Juan Robinson) 24 hours before delivery, Office (760) 955-5209 or Cell (760) 559-3391.
All cabinets shall be delivered to:
City of Victorville
14177 McArt Rd
Victorville CA 92392
Attention: Juan Robinson

3 VIDEO DETECTION SYSTEM

3.1. General

This specification sets forth the minimum requirements for a system that detects vehicles on a roadway using only video images of vehicle traffic.

3.1.1 System Hardware

The video detection system (VDS) shall consist of four or six video cameras, four or more video detection processors (VDP) which mount in a standard detector rack; one or more detector rack mounted extension modules (EM),a Communications I/O interface module, a single point interface Ethernet Device, display monitor, surge suppressor for each video input, and a pointing device.

3.1.2 System Software

The system shall include software that detects vehicles in multiple lanes using only the video image. Detection zones shall be defined using only an on board video menu and a pointing device to place the zones on a video image. Up to 24 detection zones per camera shall be available. A separate computer shall not be required to program the detection zones.

3.2 Functional Capabilities

3.2.1 Available System Configuration

3.2.1.1 The VDS will be deployed at locations where site conditions and roadway geometry vary. The VDS system may also be deployed at locations where existing cabinets or equipment exist. Existing site configurations will dictate the availability of cabinet space and VDS usage.

3.2.1.2 The proposed VDS shall be available in various configurations to allow maximum deployment flexibility. Each configuration shall have identical user interface for system setup and configuration. The communications protocol to each configuration shall be identical and shall be hardware platform independent. The proposed VDS shall have multiple configurations available for deployment.

3.2.1.3 An option to have wireless video transmission between the camera sensor and VDP shall also be available from the VDS manufacturer.

3.2.1.4 Wired camera systems shall be able to transmit NTSC or PAL video signals, with minimal degradation, up to 1000 feet under ideal conditions.

3.2.1.5 Wireless camera systems shall be able to transmit an NTSC video signal, with minimal signal degradation, up to 500 feet under normal conditions and up to 900 feet under ideal electromagnetic interference conditions. Adjacent sources of electromagnetic radiation, or the absence of a direct line of sight between transmitter and receiver antennas, may result in video signal degradation.

3.2.1.6 The VDP shall process video from one to four sources depending upon the VDP module used. The source can be a video camera, DVD or video tape player. The video shall be input to the VDP in NTSC or PAL composite video format and shall be digitized and analyzed in real time. VDP's shall process images from all video inputs simultaneously.

3.2.1.7 The VDP shall detect the presence of vehicles in up to 24 detection zones per camera. A detection zone shall be approximately the width and length of one car.

3.2.1.8 Detection zones shall be programmed via an on-board menu displayed on a video monitor and a pointing device connected to the VDP. The menu shall facilitate placement of detection zones and setting of zone parameters or to view system parameters. A separate computer shall not be required for programming detection zones or to view system operation.

3.2.1.9 The VDP shall store up to three different detection zone patterns. The VDP can switch to any one of the three different detection patterns within 1 second of user request via menu selection with the pointing device. Each configuration shall be uniquely labeled for identification and the currently active configuration indicator shall be displayed on the monitor.

3.2.1.10 The VDP shall detect vehicles in real time as they travel across each detector zone.

3.2.1.11 The VDP shall have an EIA232 port for communications with an external computer. The VDP EIA232 port shall be multi-drop compatible.

3.2.1.12 The VDP shall accept new detector patterns from an external computer through the EIA232 port when the external computer uses the correct communications protocol for downloading detector patterns. A Windows™-based software designed for local or remote connection and providing video capture, real-time detection indication and detection zone modification capability shall be provided with the system.

3.2.1.13 The VDP shall send its detection patterns to an external computer through the EIA232 port when requested when the external computer uses the appropriate communications protocol for uploading detector patterns.

3.2.1.14 The extension module (EM) shall be available to avoid the need of rewiring the detector rack, by enabling the user to plug an extension module into the appropriate slot in the detector rack. The extension module shall be connected to the VDP by an 8-wire cable with modular connectors. VDP and EM communications shall be accommodated by methods using differential signals to reject electrically coupled noise. The extension module shall be available in both 2 and 4 channel configurations. EM configurations shall be programmable from the VDP. A separate I/O module with 32 outputs – 8 inputs using external wire harness for expanded flexibility shall also be provided.

3.2.1.15 The camera system shall be able to transmit the composite video signal, with minimal signal degradation, up to 1000 feet under ideal conditions.

3.2.1.16 The associated VDP shall default to a safe condition, such as a constant call on each active detection channel, in the event of loss of video signal.

3.2.1.17 The system shall be capable of automatically detecting low-visibility conditions such as fog and respond by placing all defined detection zones in a constant call mode. A user-selected output shall be active during the low-visibility condition that can be used to modify the controller operation if connected to the appropriate controller input modifier(s). The system shall automatically revert to normal detection mode when the low-visibility condition no longer exists.

3.3 Vehicle Detection

3.3.1 Up to 24 detection zones per camera input shall be supported and each detection zone can be sized to suit the site and the desired vehicle detection region.

3.3.2 The VDP shall provide up to 24 output channels of vehicle presence detection per camera through a standard detector rack edge connector and one or more extension modules.

3.3.3 A single detection zone shall be able to replace multiple inductive loops and the detection zones shall be OR'ed as the default or may be AND'ed together to indicate vehicle presence on a single phase of traffic movement.

3.3.4 Placement of detection zones shall be done by using only a pointing device, and a graphical interface built into the VDP and displayed on a video monitor, to draw the detection zones on the video image from each video camera. No separate computer shall be required to program

the detection zones.

3.3.5 Detection zone outputs shall be configurable to allow the selection of presence, pulse, extend, and delay outputs. Timing parameters of pulse, extend, and delay outputs shall be user definable between 0.1 to 25.0 seconds.

3.3.6 Up to six detection zones shall be capable to count the number of vehicles detected. The count value shall be internally stored for later retrieval through the EIA232 port. The zone shall also have the capability to calculate and store average speed and lane occupancy at bin intervals of 10 seconds, 20 seconds, 1 minute, 5 minutes, 15 minutes, 30 minutes and 60 minutes.

3.3.7 When a vehicle is detected within a detection zone, the corners of the detection zone shall activate on the video overlay display to confirm the detection of the vehicle.

3.3.8 Detection zone setup shall not require site specific information such as latitude and longitude to be entered into the system.

3.3.9 A minimum of 3 detection zone patterns shall be saved within the VDP memory. The VDP's memory shall be non-volatile to prevent data loss during power outages. The VDP shall continue to operate (e.g. detect vehicles) using the existing zone configurations even when the operator is defining/modifying a zone pattern. The new zone configuration shall not go into effect until the configuration is saved by the operator.

3.3.10 The selection of the detection zone pattern for current use shall be done through a local menu selection or remote computer via EIA232 port. It shall be possible to activate a detection zone pattern from VDP memory and have that detection zone pattern displayed within 1 second of activation.

3.3.11 The VDP system shall have the capability to automatically switch to any one of the stored configurations based on the time of day which shall be programmable by the user.

3.3.12 The VDP shall provide dynamic zone reconfiguration (DZR) to enable normal detector operation of existing channels except the one where a zone is being added or modified during the setup process. The VDP shall output a constant call on any detection channel corresponding to a zone being modified.

3.3.13 Detection shall be at least 98% accurate in good weather conditions and at least 96% accurate under adverse weather conditions (rain, snow, or fog). Detection accuracy is dependent upon site geometry; camera placement, camera quality and detection zone location, and these accuracy levels do not include allowances for occlusion or poor video due to camera location or quality.

3.3.14 The VDP shall output a constant call for each enabled detector output channel if a loss of video signal occurs. The VDP shall also output a constant call during the background learning period.

3.4 VDP and EM Hardware

3.4.1 The VDP and extension module (EM) shall be specifically designed to mount in a standard detector rack, using the edge connector to obtain power and provide contact closure outputs. No adapters shall be required to mount the VDP or EM in a standard detector rack. Detector rack rewiring shall not be required.

The EM shall be available to avoid the need of rewiring the detector rack, by enabling the user to plug an extension module into the appropriate slot in the detector rack. The extension module shall be connected to the VDP by a 8 wire cable with modular connectors, and shall output contact closures in accordance with user selectable channel assignments. The EM is available in 2, 4, or 24 channel configurations.

3.4.2 The VDP and EM shall operate in a temperature range from -34°C to +74°C and a humidity range from 0%RH to 95%RH, non-condensing.

3.4.3 The VDP and EM shall be powered by 12 or 24 volts DC. These modules shall automatically compensate for the different input voltages.

3.4.4 VDP power consumption shall not exceed 300 milliamps at 24 VDC. The EM power consumption shall not exceed 120 milliamps at 24 VDC.

3.4.5 The VDP shall include an EIA232 port for serial communications with a remote computer. The VDP EIA232 port shall be multi-drop compatible. This port shall be a 9-pin "D" subminiature connector on the front of the VDP.

3.4.6 The VDP shall utilize flash memory technology to enable the loading of modified or enhanced software through the EIA232 port without modifying the VDP hardware.

3.4.7 The VDP and EM shall include detector output pin-out compatibility with industry standard detector racks.

3.4.8 The front of the VDP shall include detection indications, such as LED's, for each channel of detection that display detector outputs in real time when the system is operational.

3.4.9 The front of the single and dual VDPs shall include one or two BNC video input connectors suitable for RS170 video inputs as required. For four channel VDPs, an adapter cable that converts a DB15 interface to 4 individual BNC connectors shall be used. The video input shall include a switch selectable 75-ohm or high impedance termination to allow camera video to be routed to other devices, as well as input to the VDP for vehicle detection. RCA type connectors/jacks for video input are not allowed. Video shall not be routed via the edge connectors of the processor.

3.4.10 The front of the VDP shall include one BNC video output providing real time video output that can be routed to other devices. A RCA type connector/jack for video output is not allowed.

3.4.11 The front panel of the VDP and EM shall have a detector test switch to allow the user to place calls on each channel. The test switch shall be able to place either a constant call or a momentary call depending on the position of the switch.

3.5 Rack Mounted Video Detection Single Point Interface Ethernet Device With MPEG4/H.264 Video Streaming

3.5.1. General

This specification sets forth the minimum requirements for a module that provides a single point interface to multiple rack-mounted video detection units. This module shall also have the capability to stream up to 4 simultaneous video streams over an Ethernet interface.

3.5. 2. Functional Capabilities

3.5.2.1 The interface device shall provide capabilities to enable multiple rack-mounted video detection processors to be locally and remotely accessed from a single point via one set of user interface devices. User interface devices are defined as a pointing device (mouse or track-ball) and video monitor.

3.5.2.2 Up to four video detection processor chains (video detection processor and extension modules) shall be accommodated.

3.5.2.3 The device shall allow the operator to switch video output display for any of the attached rack-mounted video detection processors by pressing a momentary switch or by using the remote access software.

3.5.2.4 Local user access to video detection programming shall be limited to the detection processor unit that is currently being displayed on the monitor.

3.5.2.5 All local programming and setup parameters for the video detection processor shall be user accessible through the interface unit without requiring the user to swap user interface cables between video detection processors.

3.5.2.6 Remote access to the device shall be through the built-in Ethernet port or EIA-232 port via access software running on a Microsoft Windows based personal computer.

3.5.2.7 An internet browser-based remote access firmware shall also be available for remote setup and diagnostics.

3.5.2.8 The interface unit shall support streaming video technology using MPEG4 and H.264 standards to allow the user to monitor video detection imagery over the Ethernet interface. Motion JPEG streaming video shall not be allowed.

3.5.2.9 The user shall be able to select which video input to be displayed on the output video monitor by repeatedly depressing the menu button.

3.5.2.10 The user shall be able to select a quad view of all of the four cameras simultaneously on the output video monitor by depressing the menu button.

3.5.2.11 The interface unit shall allow four independent streams, one from each video detection processor, to be transported via Ethernet to four independent streaming video players simultaneously in CIF resolution.

3.5.2.12 The interface unit shall also have a browser interface that allows the user to configure the module.

3.5.2.13 The browser interface shall also allow the user to view the streaming video on the browser interface.

3.5.2.14 The browser interface shall allow the user to select the resolution of the displayed streamed video.

3.5.2.15 The interface unit shall support the streaming and display of D1, CIF, QCIF, VGA and QVGA video resolutions in a single stream or four concurrent streams in CIF resolution.

3.5.2.16 The interface unit shall allow the user to select a quad-view of all four input video signals to be shown on the browser interface.

3.5.2.17 The interface unit shall allow the user to manage the unit's Ethernet bandwidth usage by allowing the user to select the maximum bandwidth limit between 256 kbps and 7.0 Mbps.

3.5.2.18 The browser interface shall allow the user to change the unit's Ethernet network settings of IP address, subnet mask and default gateway.

3.5.2.19 The interface unit shall allow the user to upload new application firmware through the use of the browser interface.

3.5.2.20 Access to the interface unit shall be under password control and the browser interface shall allow the user to change the password.

3.5.2.21 The interface unit shall have the capability to perform IP port redirecting between the remote management software and each attached video detection processor. A unique IP port number shall be assigned for each video detection interface. The port number shall not be identical to the web browser interface of 80.

3.5.3. Interface Device Hardware

3.5.3.1 The interface device shall be specifically designed to mount in a standard TS-1, TS-2, and 170 type detector rack, using the edge connector to obtain power. No adapters shall be required to mount the interface device in a standard detector rack.

3.5.3.2 The interface device shall occupy no more than two slots in the detector rack and shall provide a loop-type handle for easy installation and removal.

3.5.3.3 The interface device shall be powered by 12 or 24 volts DC and shall not consume more than 6.25 watts. The unit shall automatically compensate for the different input voltages and shall be hot-swappable.

3.5.3.4 The interface device shall operate in a temperature range from -35°C to +74°C and a humidity range from 0% RH to 95% RH, non-condensing.

3.5.3.5 Video Ports - The interface unit shall accommodate a maximum of four composite video inputs and one video output.

3.5.3.5.1 Video inputs and video output shall be made via BNC connectors to ensure secure connections. RCA or other straight friction plug-in type connections shall not be allowed. Video inputs shall use a vendor supplied “octopus” cable to accommodate the four video inputs. Provisions shall be made to accommodate the mating cable to utilize jack screws for securing the octopus cable.

3.5.3.5.2 The interface unit shall accommodate either monochrome or color video signals conforming to NTSC or PAL video standards.

3.5.3.5.3 The interface unit shall automatically sense the video input signal and configure the video output port to either NTSC or PAL standards. Each video input signal shall be separately sensed to allow mixed video signals.

3.5.6 The interface unit shall interface with up to four video detection processors using RJ-45 interface connectors.

3.5.7 The interface unit shall support the use of USB pointing devices. The unit shall support either a USB mouse or trackball. Pointing devices shall not require vendor specific pointing device software drivers.

3.5.8 An EIA-232 communications port shall be provided for local and remote access. The connector for this port shall be a 9-pin “D” subminiature connector on the front of the interface unit. Provisions shall be made to accommodate mating cables to utilize jack screws for securing cables.

3.5.9 Hi-intensity LED status lights shall be provided to facilitate system monitoring. Indicators shall be provided to show the status of the internal processor, video lock and indication of which video input is being monitored.

3.5.10 An Ethernet port shall be integrated within the interface unit. The Ethernet port shall conform to 802.3 Ethernet specifications and shall auto-sense between 10 and 100 Mbps data rates. Industry standard TCP/IP (UDP and TCP packets) protocol shall be supported. The Ethernet connection shall be made through a RJ-45 connector.

3.5.4 Limited Warranty

3.5.4.1 The supplier shall provide a limited three-year warranty on the video detection system. See suppliers standard warranty included in the Terms and Conditions of Sale documentation.

3.5.4.2 During the warranty period, technical support shall be available from the supplier via telephone within 4 hours of the time a call is made by a user, and this support shall be available from

factory-certified personnel or factory-certified installers.

3.5.5 Maintenance and Support

3.5.5.1 The supplier shall maintain an adequate inventory of parts to support maintenance and repair of the system. These parts shall be available for delivery within 30 days of placement of an acceptable order at the supplier's then current pricing and terms of sale for said parts.

3.5.5.2 The supplier shall maintain an ongoing program of technical support for the interface unit and video detection system. This technical support shall be available via telephone, or via personnel sent to the installation site upon placement of an acceptable order at the supplier's then current pricing and terms of sale for on site technical support services.

3.5.5.3 Installation or training support shall be provided by a factory authorized representative.

3.5.5.4 All product documentation shall be written in the English language.

3.6. Camera

3.6.1 The video cameras used for traffic detection shall be furnished by the VDP supplier and shall be qualified by the supplier to ensure proper system operation.

3.6.2 The camera shall produce a useable video image of the bodies of vehicles under all roadway lighting conditions, regardless of time of day. The minimum range of scene luminance over which the camera shall produce a useable video image shall be the minimum range from nighttime to daytime, but not less than the range 0.1 lux to 10,000 lux.

3.6.3 The camera shall be digital signal processor (DSP) based and shall use a sensing element and shall output color video with resolution of not less than 470 TV lines. The imager shall have a minimum effective area of 768(h) x 494(v) pixels.

3.6.4 The camera shall include an electronic shutter control based upon average scene luminance and shall be equipped with an auto-iris lens that operates in tandem with the electronic shutter.

3.6.5 The imager luminance signal-to-noise ratio (S/N) shall be more than 50 dB.

3.6.6 The camera shall utilize automatic white balance.

3.6.7 The camera shall include a variable focal length lens with variable focus that can be adjusted, without opening up the camera housing, to suit the site geometry by means of a portable interface device designed for that purpose and manufactured by the detection system supplier.

3.6.8 The horizontal field of view shall be adjustable from 5.4 to 50.7 degrees minimum. A single camera configuration shall be used for all approaches in order to minimize the setup time and spares required by the user.

3.6.9 The lens shall also have an auto-focus feature with a manual override to facilitate ease of setup.

3.6.10 The camera shall incorporate the use of preset positioning that store zoom and focus positioning information. The camera shall have the capability to recall the previously stored preset upon application of power.

3.6.11 The camera shall be powered by 120 VAC 60 Hz. Power consumption shall be 15 watts or less under all conditions.

3.6.12 The camera shall be housed in a weather-tight sealed enclosure. The enclosure shall be made of 6061 anodized aluminum. The housing shall be field rotatable to allow proper alignment between the camera and the traveled road surface.

3.6.13 The enclosure shall be design so that the pan, tilt and rotation of the camera assembly can be accomplished independently without affecting the other settings.

3.6.14 The glass face on the front of the enclosure shall have an anti-reflective coating to minimize light and image reflections.

3.6.15 The camera enclosure shall be equipped with a sunshield. The sunshield shall include a provision for water diversion to prevent water from flowing in the camera's field of view. The camera enclosure with sunshield shall be less than 6" diameter, less than 18" long, and shall weigh less than 6 pounds when the camera and lens are mounted inside the enclosure.

3.6.16 The camera enclosure shall include a proportionally controlled heater to assure proper operation of the camera system at low temperatures and prevent moisture condensation on the optical faceplate of the enclosure.

3.6.17 When mounted outdoors in the enclosure, the camera shall operate satisfactorily in a temperature range from -34 °C to +60 °C and a humidity range from 0% RH to 100% RH.

3.6.18 The camera shall be powered by 120-240 VAC 50/60 Hz. Power consumption shall be 45 watts or less under all conditions.

3.6.19 Recommended camera placement height shall be 33 feet (or 10 meters) above the roadway, and over the traveled way on which vehicles are to be detected. For optimum detection the camera should be centered above the traveled roadway. The camera shall view approaching vehicles at a distance not to exceed 350 feet for reliable detection (height to distance ratio of 10:100). Camera placement and field of view (FOV) shall be unobstructed and as noted in the installation documentation provided by the supplier.

3.6.20 The camera enclosure for the standard camera sensor shall be equipped with separate, weather-tight connections for power and video cables at the rear of the enclosure. These connections may also allow diagnostic testing and viewing of video at the camera while the camera is installed on a mast arm or pole using a lens adjustment module (LAM) supplied by the VDS supplier. Video and power shall not be connected within the same connector.

3.6.21 The video signal output by the camera shall in accordance with NTSC and PAL format standards and shall be able to transmit VDP-usable video signals up to 1000 feet.

3.6.22 The video signal shall be fully isolated from the camera enclosure and power cabling.

3.7 Installation

3.7.1 The coaxial cable to be used between the camera and the VDP in the traffic cabinet shall be Belden 8281. This cable shall be suitable for installation in conduit or overhead with appropriate span wire. BNC plug connectors shall be used at both the camera and cabinet ends. The coaxial cable, BNC connector, and crimping tool shall be approved by the supplier of the video detection system, and the manufacturer's instructions must be followed to ensure proper connection.

3.7.2 The power cabling shall be 16 AWG three-conductor cable with a minimum outside diameter of 0.325 inch and a maximum diameter of 0.490 inch. The cabling shall comply with the National Electric Code, as well as local electrical codes. Cameras may acquire power from the luminaire if necessary.

3.7.3 The video detection camera shall be installed by factory-certified installers as recommended by the supplier and documented in installation materials provided by the supplier. Proof of factory certification shall be provided.

3.8 Warranty

3.8.1 The supplier shall provide a limited three-year warranty on the video detection system. See suppliers standard warranty included in the Terms and Conditions of Sale documentation.

3.8.2 During the warranty period, technical support shall be available from the supplier via telephone within 4 hours of the time a call is made by a user, and this support shall be available from factory-certified personnel or factory-certified installers.

3.8.3 During the warranty period, updates to VDP software shall be available from the supplier without charge.

3.9 Maintenance and Support

3.9.1 The supplier shall maintain an adequate inventory of parts to support maintenance and repair of the video detection system. These parts shall be available for delivery within 30 days of placement of an acceptable order at the supplier's then current pricing and terms of sale for said parts.

3.9.2 The supplier shall maintain an ongoing program of technical support for the video detection system. This technical support shall be available via telephone, or via personnel sent to the installation site upon placement of an acceptable order at the supplier's then current pricing and terms of sale for on site technical support services.

3.9.3 Installation or training support shall be provided by a factory authorized representative.

3.9.4 All product documentation shall be written in the English language.

3.10 Determination of Suitability

3.10.1 Any manufacturer of traffic signal control equipment or controller cabinets to be supplied under these Special Provisions shall provide a field and factory demonstration of the equipment proposed to be supplied. The demonstration shall be of equipment that has operated satisfactorily in accordance with specifications for a minimum of 180 calendar days subsequent to final acceptance by the jurisdiction to which it was supplied. This equipment shall have been performing those functions proposed under this contract. The demonstration shall be to **two members of the City of Victorville Engineering Department designated by the City Traffic Engineer.** The two person review team will determine the suitability of the equipment and their report shall be the final authority for determination of suitability of the proposed equipment. All expenses incurred in providing this demonstration shall be the responsibility of the manufacturer of the proposed equipment.

3.10.2 The following equipment has been determined to be suitable to be supplied under these Special Provisions:

a) Video Cameras
Vantage Camera Assembly, Variable Focal Length w/Vantage LAM Option

b) Interface Units
Vantage Edge2 Processor w/VRAS – Vantage Remote Access System
4ea- 1 channel Vantage Edge2 Processors shall be provided with each cabinet

c) Edge Connect Card
2ea Iteris Edge Connect modules shall be provided with each cabinet

d) Edge2 I/O module
1ea Iteris Edge2 I/O module shall be provided with each cabinet (BIU for SDLC connection)

3.10.3 Any departure from the equipment listed under Sec. 3.10.2 of these Special Provisions shall require Determination of Suitability of the proposed alternate equipment in accordance with Sec. 3.10.1 of these Special Provisions **prior to award of contract**. Failure to achieve a Determination of Suitability for the proposed alternate equipment shall be considered cause for rejection of the project bid as non-responsive.

4 EMERGENCY VEHICLE PRE-EMPTION SYSTEM

4.1 GENERAL DESCRIPTION AND REQUIREMENTS

A multimode priority control system shall operate in a manner that allows infrared, and GPS/Radio priority control technologies to interoperate and activate one another in a consistent manner. The priority control system shall consist of a matched system of vehicle equipment and intersection equipment capable of employing both data-encoded radio communications to identify the presence of designated priority vehicles, as well as data-encoded infrared signaling communications. In preemption mode, the data-encoded communication shall request the traffic signal controller to advance to and/or hold a desired traffic signal display selected from phases normally available. A record of system usage by agency identification number, vehicle classification and vehicle identification number shall be created. The system software shall support call history analysis and reporting across any subset of intersections and/or vehicles independent of activation method. System software shall also support both onsite and remote programming and monitoring of the priority control system.

The vehicle equipment may include a GPS radio unit and vehicle control unit or a data encoded infrared emitter employing either a strobe or LED based light source. The GPS receiver on the vehicle shall obtain vehicle location, heading and speed from the U.S. Department of Defense (DoD) operated satellites. The GPS radio vehicle equipment shall also monitor the vehicle's turn signal status. A 2.4 GHz spread spectrum/frequency hopping radio in the vehicle equipment shall transmit this data to nearby intersections, only when it is within radio communication range of an intersection, which is received by a similar radio located at the intersection. The vehicle radio shall communicate to intersection radios at distances up to at least 2,500 feet (762 m) with no obstructions. If an infrared data-encoded emitter is employed on the vehicle, it shall send an encoded infrared signal to the detector, with a range capability of 2,000 feet minimum.

Intersection detection equipment will consist of either a GPS receiver and radio transceiver or an infrared detector or both connected to a multimode phase selector located in the intersection controller cabinet. The GPS radio unit receives the data-encoded radio signal from the GPS radio equipped vehicle and transmits the decoded information through detector cable to the multimode phase selector for processing. The intersection radios also communicates to vehicles and other intersection radios at distances of up to at least 2,500 feet (762m) with no obstructions. The infrared detector receives the data-encoded infrared signal from the infrared equipped vehicle and transmits information through detector cable designed to convert infrared light energy at the proper wavelength into analog voltage signals that can be evaluated and decoded by the multimode phase selector.

The multimode phase selector shall be capable of receiving data encoded signals from either or both infrared and GPS radio detection equipment and combine the detection signals into a single set of tracked vehicles requesting priority activation. The multimode phase selector will process the vehicle information to ensure that the vehicle is (1) in a predefined approach corridor, (2) heading toward the intersection, (3) requesting priority, and (4) within user-settable range. The multimode phase selector shall treat the combined, single set of tracked calls with first come first served priority methodology within a given priority level. Arbitration between infrared signal intensity and GPS radio distance/ETA shall be first come first served methodology based on time of detection as each equipped vehicle reaches its programmed threshold.

When these conditions are met, the phase selector shall generate a priority control request to the traffic controller for the approaching priority vehicle. If the approaching GPS radio preemption equipped vehicle has an active turn signal, the approach intersection shall relay the priority request to the next nearest in-range intersection in the direction of the approaching vehicle's turn signal. The output of the phase selector may also be varied depending on the state of the approaching vehicle's turn signal.

To ensure priority control system integrity, operation and compatibility, all components shall be from the same manufacturer. The system shall offer compatibility with most signal controllers, e.g. NEMA (National Electrical Manufacturers Association) 170/2070 controllers. The system can be interfaced with most globally available controllers using the controller's preemption inputs. RS-232, USB and Ethernet interfaces shall be provided to allow management by on-site interface software and central software.

The central software shall manage the region's priority control system as a single, integrated system, independent of the particular activation method or methods (infrared or GPS/radio) used within the region. The central software shall allow each intersection within the region to be configured with one or more phase selectors with varying methods of activation; e.g., one infrared phase selector and one GPS/radio phase selector or a multimode phase selector. The central software shall allow each vehicle within the region to be

configured with priority control equipment with varying methods of activation; e.g., an infrared emitter and a GPS/radio vehicle control unit.

The central software shall support analysis of priority control activity at an intersection and/or for a vehicle as it is migrated between activation methods (e.g., migrated from infrared to GPS/radio). This analysis shall allow the user to readily determine whether the priority control system has retained its effectiveness across the migration. When a phase selector is removed or replaced at an intersection (e.g., replacing an infrared phase selector with a GPS/radio phase selector or multimode phase selector), call history and configuration history from that phase selector shall still be available for use in analysis and reporting in the central software.

The central software shall provide a means to filter the display such that only the information relevant to the activation method in use is shown to the user.

4.2 MATCHED SYSTEM COMPONENTS

The required signal preemption/priority system is comprised of matched system components described below:

A. GPS Radio System Components

1. Vehicle/Intersection radio/GPS module, Radio/GPS Antenna with factory terminated SMA connectors, and vehicle control unit. The radio/GPS module shall obtain the vehicle position, speed and heading information and transmit this information only when within range of a GPS radio preemption equipped intersection. The vehicle control unit shall communicate with the radio/GPS module and provide the interface to the vehicle in order to monitor the vehicle's turn signal status, provide activation and disable inputs as well as regulate the vehicle power provided to the radio/GPS module.
2. Intersection Radio/GPS Module. The intersection radio/GPS module shall transmit a beacon every second and receive the data transmitted by the vehicle equipment and relay this information to the phase selector as well as other system-equipped intersections. It shall also obtain position information from the GPS satellites.
3. Radio/GPS Cable. The radio/GPS cable shall carry the data received from the intersection radio/GPS unit to the phase selector. It shall also carry the power for the radio and GPS components provided by the phase selector. The same cable shall be used to carry the data between the vehicle radio/GPS unit and the vehicle control unit. The cable used to connect the radio/GPS unit to the phase selector shall be a shielded 10 conductor data cable; the use of coax cable is not permitted.

B. Infrared System Components

1. *Data-Encoded LED Infrared Emitter*. The data-encoded emitter shall trigger the system. It shall send the encoded infrared signal to the detector. It shall be located on the priority or probe vehicle.
2. *Remote Coding Unit.* The remote coding unit shall be capable of remotely programming the data-encoded LED infrared emitter without the use of a computer. The remote coding unit will not be available for use with the OEM version of the data-encoded LED emitter.
3. *Infrared Detector.* The detector shall change the infrared signal to an electrical signal. It shall be located at or near the intersection. It shall send the electrical signal via the detector cable to the phase selector.
4. *Detector Cable.* The detector cable shall carry the electrical signal from the detector to the phase selector.

C. Multimode System Components

1. *Multimode Phase Selector*. The multimode phase selector shall recognize inputs from both infrared and GPS/radio activation methods at the intersection and supply coordinated inputs to the controller. The multimode phase selector shall process the data in order to validate that all parameters required for granting a priority request are met. It shall be located within the controller cabinet at the intersection. It shall request the controller to provide priority to a valid priority vehicle by connecting its outputs to the traffic controller's preemption inputs.
2. *Card Rack*. The card rack shall provide simplified installation of a phase selector into controller cabinets that do not already have a suitable card rack.
3. *Auxiliary Interface Panel*. The auxiliary panel shall provide additional preemption outputs if needed. It shall also provide a connection point for the phase selector to monitor the status of the intersection's green lights (green sense). Additional RS-232 communication ports may also be accessed via this

panel. If additional outputs are not required, an auxiliary harness shall be used to monitor the status of the intersection's green lights.

4. *Base Station.* The base station module is used at fire stations that are located very close to intersections. When the base station is activated, all nearby equipped intersection/s or only those intersections in the planned direction of travel shall immediately begin requesting preemption from the traffic controller. The base station shall wirelessly communicate to intersections near the station that can be activated from the base station controller and/or passing vehicles that are equipped with GPS radio vehicle equipment.

4.3 SYSTEM COMPONENT SPECIFICATIONS

4.3.1 Multimode Phase Selector

4.3.1.1. The multimode phase selector recognizes inputs from both infrared and GPS/radio activation methods at the intersection and supplies coordinated inputs to the controller.

4.3.1.2. The multimode phase selector is designed to be installed in the traffic controller cabinet and is intended for use directly with numerous controllers. These include California/New York Type 170 controllers with compatible software, NEMA controllers, or other controllers along with the system card rack and suitable interface equipment and controller software.

4.3.1.3. The multimode phase selector will be a plug-in, four channel, multiple-priority, multi-modal device intended to be installed directly into a card rack located within the controller cabinet. The multi-mode phase selector shall be capable of using existing infrared or GPS/radio system card racks,

4.3.1.4. The multimode phase selector may be powered from either +24 VDC or 120VAC.

4.3.1.5. The multimode phase selector shall support front-panel RS-232, USB and Ethernet interfaces to allow management by on-site interface software and central software. An RS-232 port shall be provided on the rear card edge of the unit. Additional RS-232 communication ports shall be available using the Auxiliary Interface Panel.

4.3.1.6. The multimode phase selector shall include the ability to directly sense the green traffic controller signal indications through the use of dedicated sensing circuits and wires connected directly to field wire termination points in the traffic controller cabinet. This connection shall be made using the auxiliary interface panel.

4.3.1.7. The multimode phase selector shall have the capability of storing a minimum of 10,000 priority control calls. When the log is full, the phase selector shall drop the oldest entry to accommodate the new entry. The phase selector shall store each call record in non-volatile memory and shall retain the record if power terminates. Each preemption record entry shall include the following points of information about the priority call:

a. Agency: Indicates the operating agency of the vehicle.
b. Classification: Indicates the class type of vehicle.
c. Identification number: Indicates the unique ID number of the vehicle.
d. Priority level: Indicates the vehicle's priority level (High, Low or Probe).
e. Direction: Channel A, B, C, or D; indicates the vehicle's direction of travel.
f. Call duration: Indicates the total time in seconds the priority status is active.
g. Final greens at end of call: Indicates which phases are green at the end of the call.
h. Duration of the final greens: Indicates the total time final greens were active at the end of call.
i. Time and date call started and ended: Indicates the time a priority call started and ended, provided in seconds, minutes, hours, day, month, and year.
j. Turn signal status: Indicates the status of the turn signal during the call.
k. Priority output active: Indicates if the phase selector requested priority from the controller for the call.
l. Historical no preempt cause: Indicates a history of conditions, which may have prevented a call or caused a call to terminate.
m. Speed of vehicle: entry speed, exit speed, average speed through call,
n. Relative priority: relative priority of vehicle class logged at time of call,
o. Directional priority: directional priority logged at time of call,
p. Preempt output used
q. Signal intensity: maximum and minimum infrared signal intensity during call.

4.3.1.8. The multimode phase selector shall support a minimum of 5000 code pairs (agency ID, vehicle ID) providing unique vehicle identification and system security implementation at the vehicle level.

4.3.1.9. The multimode phase selector shall include several programmable control timers that will limit or modify the duration of a priority control condition, by channel. The control timers will be as follows:

a. MAX CALL TIME: Sets the maximum time that a channel is allowed to be held active by a specific vehicle. It shall be settable from 60 to 65,535 seconds in one-second increments. The factory default shall be 360 seconds.
b. OFF APPROACH CALL HOLD TIME: Sets the amount of time a call is held on a channel after the vehicle has left the approach. It shall be settable from 4 to 255 seconds in one-second increments. The factory default shall be 6 seconds.
c. LOST SIGNAL CALL HOLD TIME: Sets the amount of time that a call is held on a channel after the intersection has lost contact with the vehicle. It shall be settable from one to 255 seconds in one-second increments. The factory default shall be six seconds.

4.3.1.10. The multimode phase selector shall have the ability to enable or disable all calls of both priority levels. This shall be independently settable by channel.

4.3.1.11. A unique intersection name, which shall be broadcasted, shall be settable for each multimode phase selector.

4.3.1.12. Up to 25 different radio channels shall be available to be assigned to the multimode phase selector.

4.3.1.13. The multimode phase selector shall operate in a mode that shall vary the output based on the status of the approaching vehicles turn signal. Additional outputs available on an Auxiliary Interface Panel may be needed. Settings shall be available for this mode as follows:

a. Output mappings for each channel.
b. Separate setting for each of the four channels.
c. Separate settings for each left turn, right turn or straight signal status for each of the above four channels.

4.3.1.14. The multimode phase selector's default values shall be programmable by the operator on-site or at a remote location.

4.3.1.15. The multimode phase selector shall be capable of three levels of signal discrimination, as follows:

a. Verification of the presence of the signal of either High priority or Low priority.
b. Verification that the vehicle is approaching the intersection within a prescribed Estimate Time of Arrival (ETA).
c. Determination of when the vehicle is within the prescribed range, either by intensity level or distance from the intersection.

4.3.1.16. The multimode phase selector shall include one opto-isolated NPN output per channel that provides the following electrical signal to the appropriate pin on the card edge connector:

a. 6.25Hz ± 0.1Hz 50% on/duty square wave in response to a Low priority call.
b. A steady ON in response to a High priority call.
c. The phase selector will also have the option of providing separate outputs for High and Low priority calls for controllers that do not recognize a 6.25 Hz pulsed Low priority request.
d. Additional outputs or output modes shall also be available on the auxiliary interface panel.

4.3.1.17. The multimode phase selector shall accommodate three methods for setting range thresholds for High and Low priority signals:

a. Based on the approaching vehicle's Estimated Time of Arrival (ETA). This shall be settable between 0 and 255 seconds in one second increments. The factory default shall be 30 seconds. The ETA threshold shall be independently settable by each of the following parameters: vehicle class, approach channel and priority level.
b. Based on the approaching vehicle's distance from the intersection. This shall be settable between 0 and 5,000 feet in one foot increments. The factory default shall be 1000 feet. The Distance threshold shall be independently settable by each of the following parameters: vehicle class, channel and priority level.
c. Based on infrared emitter intensity the system shall accommodate setting a separate range from 200 feet (61m) to 2,500 feet (762m) with 1,200 range set points for both High and Low priority signals.

4.3.1.18. The multimode phase selector shall support three types of green sense logging.

a. Preemption impact logging which measures and records the impact of an individual signal preemption upon a measured green cycle time.
b. TSP impact logging which measures and records whether a TSP advantage was gained during a request and the amount of early or extended green applied.
c. Green cycle logging records changes in the average green cycle time. When the average time is measured to have changed, a new log entry is made.

4.3.1.19. The multimode phase selector will have the following indicators:

a. A STATUS indicator that illuminates steadily to indicate proper operation.
b. A link indicator on the multimode phase selector illuminates green if other radios are within range.
c. A radio indicator that indicates the status of the communication between the vehicle control unit and the radio/GPS unit. The indicator illuminates amber to indicate that there is communication between

the vehicle control unit and the radio/GPS unit. The indicator illuminates green to indicate that a GPS signal has been acquired and the 2.4 GHz radio is on the air.

d. LED indicators (one for High priority, one for Low priority) for each channel display active calls as steady ON and pulse to indicate pending preemption requests.

4.3.1.20. The phase selector shall have a test switch for each channel to test proper operation of High or Low priority.

4.3.1.21. The multimode phase selector shall utilize the time obtained from the GPS satellites to time stamp the activity logs. The user will set the local time zone (offset from GPS time) via the interface software.

4.3.1.22. The interface software shall have the capability to set the multimode phase selector to automatically adjust the GPS time offset for changes in daylight savings time.

4.3.1.23. An auxiliary interface panel shall be available to facilitate interconnections between the multimode phase selector and traffic cabinet wiring as well as provide additional outputs.

4.3.1.24. *A multimode phase selector port may be configured to output GPS data at a user selectable baud rate in the NMEA 0183format. It will output the following messages (depending on the baud rate):*

a. GGA - Global Positioning System Fix Data (2400 baud and higher)
b. GSA- GPS DOP and active satellites (2400 baud and higher)
c. GSV - Satellites in view (4800 baud and higher)
d. RMC - Recommended Minimum Navigation Information (1200 baud and higher)

For traffic controllers that are capable of interpreting GPS data in the NMEA 0183 serial format, this GPS data may be used to synchronize the controller's clock using the GPS date and time.

Additionally, a discrete output from the phase selector may be used to reset the traffic controller using the clock reset function/input of the controller. This output shall be available on the Auxilliary Interface Panel. This output shall be referenced to the GPS date and time.

This output may be configured as follows:

a. Enabled or Disabled
b. Time of day reset is activated (12:00 A. M. to 6:00 A.M. in 30 minute increments)
c. Duration of reset pulse (100-2,000 milliseconds)
d. Repeat every 1 to 30 days

4.3.1.25. The multimode phase selector shall provide the user with call play-back logs for the last 100 priority activation requests. Each log shall contain up to the last 250 seconds of a call. The call play-back logs shall include:

a. GPS/radio based calls shall record vehicle speed, heading, signal quality, GPS location, coded ID, green sense state, call status (active, pending, disabled), approach channel and turn signal status and priority information.
b. Infrared based calls shall record intensity, coded ID, green sense state, call status (active, pending, disabled), approach channel and priority information.
c. Data shall be recorded once per second. Recording terminates at call end.

4.3.1.26. The following diagnostic tests are incorporated in the multimode phase selector

a. Power up built in test
b. Communications port tests
c. Preemption output test call
d. Detector response test

4.3.1.27. The multimode phase selector shall be capable of call bridging. Call bridging enables the treatment of two vehicles requesting priority activation to have their calls linked together to hold a call to the controller so that they may traverse the approach together.

4.3.1.28. The multimode phase selector shall be capable of directional priority. Priority for calls may be assigned to individual approach channels such that calls in a particular direction will be given priority over calls in competing directions within the same priority level.

4.3.1.29. When used with a GPS Radio Unit, the multimode phase selector shall relay a priority request to the next adjacent intersection based on the direction indicated by the vehicle's turn signals.

4.3.1.30. The multimode phase selector shall be capable of utilizing time plans to allow users to vary priority activation by time of day, or for a specific time period such as special events. Time plans shall be configured via system software.

4.3.1.31. The multimode phase selector shall support evacuation mode for low priority calls. Upon activation of this mode from the central management software, low priority vehicle calls shall be recognized by the multimode phase selector as if they were high priority vehicle calls for a temporary period of time as

defined by the user. This mode shall be supported for both infrared and GPS radio emitters. Vehicles transmitting high priority signals shall continue to maintain priority over the evacuation mode priority vehicles.
4.3.1.32. The multimode phase selector shall allow relative priority. Relative priority allows emitter classes to be used as an additional level of prioritization within priority levels (i.e. high and low priority levels have different sets of relative priorities). Relative priority shall support up to 15 unique classes in each priority level (High and Low). Relative priority class level 15 will have the highest weight and 1 the lowest weight in each. If relative priority is enabled, a priority call will be granted to the caller with the higher class level within high and low priority levels. A vehicle with a call granted, shall be able to have its call taken away by a higher level class vehicle. The system shall provide a lockout threshold that once met, shall disallow higher relative priority calls from taking away a call. Separate thresholds for infrared and GPS/radio calls shall be provided. Infrared call thresholds shall be specified as an intensity with a default value of 1,000. GPS/radio call thresholds shall be specified as an ETA in seconds. The default is ETA shall be 12 seconds. Threshold values for both types of calls shall be settable via system software. High priority calls will always be served over low priority calls regardless of either's relative class. Preemption for vehicles with the same base priority (high, low) and the same relative priority is done using the default first come, first served mechanism. Relative priority is capable of being enabled or disabled using system software. Relative priority for high and low can be separately enabled or disabled using system software. The default settings for all relative priority (high and low) values will be 15. Relative priority shall be disabled by default for both high and low priority.

4.3.2. Remote Coding Unit

4.3.2.1. The remote coding unit shall be capable of remotely programming and reading the following parameters from the data-encoded LED emitter without the use of a computer:

a. Vehicle Class and Vehicle ID
b. Disable operation mode
c. Visible LED behavior

4.3.2.2. The unit shall be able to reset the emitter to factory defaults.
4.3.2.3. The unit including all electronics shall be 6.3 inches (16 cm) long, 3.7 inches (9.4 cm) wide and 1 inch (2.5 cm) thick. The unit shall have an LCD display and a keypad.
4.3.2.4. The unit shall operate on four AAA batteries.

4.3.3.Infrared Detector

4.3.31. The required detector will be a lightweight, weatherproof device capable of sensing and transforming pulsed infrared energy into electrical signals for use by the phase selection equipment.
4.3.32. The infrared detector will be designed for mounting at or near an intersection on mast arms, pedestals, pipes or span wires.
4.3.33. Each infrared detector will be supplied with mounting hardware to accommodate installation on mast arms. Additional hardware will be available for span wire installations. Additional hardware may be needed.
4.3.34. The infrared detector design will include adjustable tubes that lock into position, to enable their reorientation for span wire mounting without disassembly of the unit.
4.3.35. The detector will accept infrared signals from one or two directions and will provide single or dual electrical output signal(s).
4.3.36. The infrared detector will be available in three configurations:

a. Uni-directional with one output channel.
b. Bi-directional with one output channel.
c. Bi-directional with two output channels.

4.3.37. The detector will allow aiming of the two infrared sensing inputs for skewed approaches, wide roads or slight curves.
4.3.38. The infrared detector will have a built-in, labeled terminal block to simplify wiring connections.
4.3.39. The infrared detector will receive power from the phase selector and will have internal voltage regulation to operate at 24 volts DC.
4.3.310. The infrared detector will respond to a clear lens data-encoded emitter with 0.84 (±10%) Joules of energy output per flash at a distance of 2,500 feet (762m) under clear atmospheric conditions. If the emitter is configured with a visible light filter, the detector will respond at a distance of 1800 feet (549m) under clear atmospheric conditions. The noted distances will be comparable day and night.
4.3.311. The infrared detector will deliver the necessary electrical signal to the phase selector via a detector cable up to 1,000 feet (305m) in length.

4.3.4. Detector Cable

4.3.4.1. The detector cable will deliver sufficient power from the phase selector to the infrared detector and will deliver the necessary quality signal from the detector to the phase selector over a non-spliced distance of 1,000 feet (305m).

4.3.4.2. The cable will be of durable construction to satisfy the following installation methods:

a. Direct burial.
b. Conduit and mast arm pull.
c. Exposed overhead (supported by messenger wire).

4.3.4.3. The outside diameter of the detector cable will not exceed 0.3 inches (7.62mm).

4.3.4.4. The insulation rating of the detector cable will be 600 volts minimum.

4.3.4.5. The temperature rating of the detector cable will be +158°F (+70°C) minimum.

4.3.4.6. The conductors will be shielded with aluminized polyester and have an AWG #20 (7 x 28) stranded and individually tinned drain wire to provide signal integrity and transient protection.

4.3.4.7. The shield wrapping will have a 20% overlap to ensure shield integrity following conduit and mast arm pulls.

4.3.4.8. The detector cable will be comprised of three signal wires and a drain wire. Each wire will be 20 AWG (7 x 28). The capacitance will not exceed 48 pF per foot a 1 Khz. The detector cable wires will be stranded, individually tinned copper, color-coded insulation as follows:

a. Orange for delivery of detector power (+).
b. Drain wire for detector power return (-).
c. Yellow for detector signal #1.
d. Blue for detector signal #2 or ground, depending on model of detector being used.

4.3.5. Data-Encoded Infrared Emitter and Programming Software

4.3.5.1. The required data-encoded emitter will generate the infrared signal, which serves as the trigger to the rest of the priority control system. The infrared signal generated by the data encoded emitter will be a series of infrared pulses from an array of infrared LEDs with integral power supply. The flash signal will consist of a fixed frequency base signal and a coded overlay signal that can be used to transmit information.

4.3.5.2. The data-encoded LED emitter will be powered by the DC voltage supplied from the battery of the vehicle, 10 to 32 volts DC. The unit will be equipped with a weatherproof in-line fuse holder and a weatherproof quick-disconnect plug.

4.3.5.3. The unit, including all electronics, will be miniaturized to a size no greater than 5.9 inches (15 cm) wide by 3.8 inches (9.7 cm) high by 2.3.5 inches (8.9 cm) deep to accommodate standalone and internal lightbar installation.

a. Alternately for a data-encoded LED based emitter intended for Lightbar Original Equipment Manufacturers (OEMs). The unit, including all electronics, will be miniaturized to a size no greater than 5.7 inches (14.5 cm) wide by 1.2 inches (3 cm) high by 1.6 inches (4 cm) deep to accommodate internal lightbar installation.

4.3.5.4. The data-encoded emitter will be supplied complete with a 25-foot (7.5 m) installation cable.

a. The installation cable for the LED OEM version will be provided by the OEM.

4.3.5.5. The flash sequence generated by the data-encoded emitter will carry three types of information:

a. The first type will be one of three distinctly different base frequencies of either approximately 10Hz for a Low priority emitter, or approximately 14Hz for a High priority emitter or approximately 12Hz for Probe frequency.
b. The second type of information generated by the data-encoded emitter will be a Vehicle classification and identification code that is interleaved into the base frequency flashes. Setting the vehicle classification and identification code will be accomplished through emitter programming software. Each data-encoded emitter will be capable of setting 10 different classifications with 1,000 different identification numbers per class for a total of 10,000 codes per base frequency.
c. The third type of information generated by the data-encoded emitter will be reserved for setting the intersection detection range. A specially equipped emitter control module with a range setting command switch will enable the traffic engineer to activate the range code from his/her vehicle. The system will accommodate setting a separate range from 200 feet (61m) to 2,500 feet (762m) with 1200 range set points, for both High and Low priority signals.

4.3.5.6. The emitter will include a multi-purpose communication port compliant with the SAE J1708 communication standard. This port enables unit configuration to be set into the emitter and read from the emitter. It also allows real-time communication between the vehicle and the emitter.

4.3.5.7. While operating, the data-encoded emitter will conduct self-diagnostics designed to monitor data

transmission integrity by checking for missing pulses. Any failures of the self-diagnostic tests will be displayed by flashing of the ON/OFF switch indicator light.

4.3.5.8. An ON/OFF switch (available for each data-encoded emitter) will be equipped with an indicator light providing internal diagnostics to assist in troubleshooting. The indicator light will operate as follows:

a. Steady on when the emitter is operating
b. Flash at a 0.5Hz rate when the emitter is intentionally disabled
c. Flash at a 2Hz rate when the emitter is inoperative

4.3.5.9. The LED emitters will contain visible light LEDs which may be user configured as follows

a. Flash at emitter flash rate during normal operation. Flash at diagnostic rate when unit has failed or is in disable mode. The visible LEDs will flash at the same rate as the infrared LEDs during normal operation. When the emitter is in Disable Mode; the LEDs will flash once every two seconds. When the emitter has failed, the LEDs will flash two times per second.
b. Off during normal operation, Flash at diagnostic rate when unit has failed or is in disable mode. The visible LEDs will be off during normal operation. When the emitter is in Disable Mode; the LEDs will flash once every two seconds. When the emitter has failed the LEDs will flash two times per second.
c. Flash once per second for 10 seconds at power up. The visible LEDs will flash once per second for ten seconds after initial power up. After that, the visible LEDs will shut off.
c. Always Off: The visible LEDs will remain off at all times.

4.3.5.10. The data-encoded emitter will be equipped with a disable input that, when activated, the emitter will stop flashing, thereby eliminating the possibility of inadvertent signal transmission after the priority vehicle has arrived at its destination. The disable input will be programmable to operate in either a latching or non-latching mode. Operation of the disable input will be programmable using software.

a. The data encoded infrared LED based emitters use angle of half intensity 0 = +/- 10 degrees LEDs to provide precise directionality control.

4.3.5.11. The data-encoded emitter will operate over a temperature range of –30°F (-34°C) to +165°F (+74°C).

4.3.5.12. The data-encoded emitter will operate over a relative humidity range of 5% to 95%.

4.3.5.13. Windows™ based software will be available at no charge for programming the emitter through its J1708 compatible multi-purpose port. The communication protocol will be made available upon request for creating software to implement real-time communication.

4.3.5.14. The emitter will provide operating modes that allow it to be powered on with the strobe/LEDs active or inactive.

4.3.6 Card Rack

4.3.6.1. The required card rack will provide simplified installation of a phase selector into controller cabinets that do not already have a suitable card rack.

4.3.6.2. The card rack will be factory wired to one connector, located behind the card slot, and a terminal block, located next to the phase selector slot, on the front of the card rack.

4.3.6.3. The card rack connector on the front will provide for all connections to the traffic controller.

4.3.6.4. The card rack will provide labeled terminal blocks for connecting the primary infrared detectors to a phase selector.

4.3.7. Interface Software

4.3.7.1. The priority control interface software will be provided on a single CD-ROM or via download to interface with the phase selector. It must run on most IBM-compatible computers equipped with Windows™ 2003 Server or Windows™ XP.

4.3.7.2. The priority control interface software must accommodate:

a. Setting up and presenting user-determined system parameters.
b. Viewing and changing settings.
c. Viewing activity screens.
d. Displaying and/or downloading records of previous activity showing class, code, priority, direction, call duration, final greens at end of call, duration of final greens, time call ended in real time plus maximum signal intensity (vehicle location information).

4.3.7.3. The priority control interface software must accommodate operation via a mouse or via the keyboard, or in combination.

4.3.7.4. The priority control interface software must provide menu displays to enable:

a. Setting of valid vehicle ID and class codes.
b. Establishing signal intensity thresholds (detection ranges), modem initialization, intersection name and timing parameters.
c. Setting of desired green signal indications during priority control operation and upload and download capability to view.

d. Resetting and/or retrieving logged data and priority vehicle activity.
e. Addressing for each card in a multi-drop connected system.
f. Confirmation light configuration.
g. Manual Control Parameters.

4.3.7.5. The interface software will provide readout of noise levels detected by the detectors. This noise level will serve as a troubleshooting tool.

4.3.7.6. The interface software shall provide a real-time activity screen which will provide the following information.

a. Call intensity value even if below threshold.
b. Vehicle Class and ID.
c. Emitter priority level.
d. Indication of detection on primary or auxiliary detector.
e. Indication if call is being serviced or is pending.
f. Indication if vehicle is in range.
g. Provides readout for four separate vehicles per channel.
h. Detector noise level readout.
i. Green phase monitoring with information on the current greens.

4.3.8 Central Management Software

4.3.8.1. The priority control central management software will be provided with installation support services to interface with phase selectors via customer communication architecture. It must run on Windows™ 2003 Server or Windows™ XP.

4.3.8.2. The priority control central management software must accommodate:

a. Setting up and presenting user-determined system parameters.
b. Viewing and changing settings.
c. Viewing activity screens.
d. Ability to cross reference operating records with database stored detailed vehicle and intersection attributes.
e. Displaying and/or downloading records of previous activity showing class, code, priority, direction, call duration, final greens at end of call, duration of final greens, time call ended in real time plus maximum signal intensity (vehicle location information). This information may be used to reconstruct the route taken by a priority (or probe) vehicle to track the vehicle.
f. Provide ad-hoc analysis capability of previous activity showing class, code, priority direction, call duration, final greens at end of call, duration of final greens, time call ended in real time plus maximum signal intensity (vehicle location information).
g. Provide scheduled reporting of operational activity including total system usage, usage by vehicle and intersection, unauthorized vehicles, long green time and long call duration.
h. Maintain security code assignments by jurisdiction and vehicle. Allow for central control over configuration of security in the phase selector.

4.3.8.3. The central management software must provide menu displays to enable the following in the phase selector:

a. Setting of valid vehicle ID and class codes.
b. Setting of desired green signal indications during priority control operation and upload and download capability to view.
c. Retrieving logged data and priority vehicle activity.
d. Addressing for each card in a multi-drop connected system.
e. Confirmation light configuration.
f. NEMA Control Parameters.

4.3.8.4. The central management software will provide readout of noise levels detected by the detectors. This noise level will serve as a troubleshooting tool.

4.3.8.5. The central software shall provide a real-time activity screen which will provide the following information.

a. Call intensity value even if below threshold.
b. Vehicle Class and ID.
c. Emitter priority level.
d. Indication of detection on primary or auxiliary detector.
e. Indication if call is being serviced or is pending.
f. Provides readout for four separate vehicles per channel.
g. Detector noise level readout.
h. Green phase monitoring with information on the current greens.

4.3.9 Serial to Ethernet Port Server.

4.3.9.1. The Serial to Ethernet Port server shall enable the serial communication from the Phase selector to the Ethernet switch located in the signal cabinet. It shall conform to the following requirements.

Management	HTTP/HTTPS, CLI, SNMP (read/write), Digi Port Authority-Remote management diagnostics and auto-discovery tool
Protocols	UDP/TCP, DHCP/RARP/ARP-Ping for IP Address assignment, PPP, Extended Telnet RFC 2217, Telnet, Reverse Telnet, Modbus to Modbus/TCP protocol conversion support
Security	SSHv2, SSL/TLS
Software	Device-initiated patented RealPort® COM port redirector
Status LEDs	Link, Activity, Power, Status
Operating Systems	AIX, HP-UX, Linux®, SCO® OpenServer™ 5, SCO® OpenServer™ 6, Solaris™ Intel, Solaris™ SPARC, Windows XP®, Windows Server® 2003, Windows Server® 2008, Windows Vista®; Note: TCP/UPD Socket Services are operating system independent
Dimensions (L x W x D)	5.25 in x 3.33 in x 0.95 in (13.34 cm x 8.46 cm x 2.42 cm)
Weight	2.25 oz (64.00 g)
Other	Full modem and hardware fl ow control, Modem emulation, Port buffering, RJ-45/DB-9F crossover cable included for optional serial configuration
Interfaces	
Serial Ports (2)	2- RS-232 RJ-45; Up to 230 Kbps throughput; Signal support for TXD, RXD, RTS, CTS, DTR, DSR, DCD
Ethernet Ports	1 RJ-45 10/100 Mbps 10/100Base-T (auto-sensing); Full or half duplex
Power Requirements	
Power Input	9-30VDC with locking barrel power connector
Power Supply (included)	12VDC/.5A max out; 120VAC in (wall mount);
Power Consumption	Typical: 4 W; Max: 6 W
Surge Protection	4 kV burst (EFT) per EN61000-4-4, 2 kV surge per EN61000-4-5
Enviromental	
Operating Temperature	0° C to +60° C (32° F to 140° F)
Storage Temperature	-40° C to +85° C (-40° F to +185° F)
Relative Humidity	5% to 95% (non-condensing)
Ethernet Isolation	1500VAC min per IEEE802.3/ANSI X3.263
Serial Port Protection (ESD)	+15 kV air 6 AP and +8 kV contact discharge per IEC 100-4-2
Approvals	
Safety	UL/CUL 60950, IEC 60950 & CB
Emissions/Immunity	CE, FCC Part 15 (Class A), EN55024, EN55022 Class A, AS/NZS 3548, CISPR 22, VCCI V-3/99.05

4.4 RELIABILITY

4.4.1 All equipment supplied as part of the infrared priority control system intended for use in the controller cabinet will meet the following electrical and environmental specifications spelled out in the NEMA Standards Publication TS2 1992, Part 2:

1. Line voltage variations per NEMA TS2 1992, Paragraph 2.1.2.
2. Power source frequency per NEMA TS2 1992, Paragraph 2.1.3.
3. Power source noise transients per NEMA TS2 1992, Paragraph 2.1.6.1.
4. Temperature range per NEMA TS2 1992, Paragraph 2.1.5.1.
5. Humidity per NEMA TS2 1992, Paragraph 2.1.5.2.
6. Shock test per NEMA TS2 1992, Paragraph 3.13.9.
7. Vibration per NEMA TS2 1992, Paragraph 3.13.8.

4.4.2 Each piece of equipment supplied as part of the priority control system intended for use in or on priority vehicles will operate properly across the entire spectrum of combinations of environmental conditions per the individual component specifications. Vehicle equipment should be tested to SAE J575 and J1455 for one or more of the following tests: vibration, moisture, dust exposure, corrosion, warpage, humidity, operational mechanical shock.

4.5 QUALIFICATIONS

The manufacturer of the required infrared priority control system will verify the proven, safe operation of the system's infrared communication technology. Upon request, the manufacturer will produce a list of user agencies having experience interfacing priority control equipment with electromechanical, solid state and programmable controller types.

4.6 RESPONSIBILITIES

A. The manufacturer of the required infrared priority control system and/or the manufacturer's representative will provide responsive service before, during and after installation of the priority control system. The manufacturer and/or the manufacturer's representative, as consultants to the installer, will provide certified, trained technicians having traffic systems industry experience and operational knowledge of priority control systems.

B. The lowest fully responsive bidder will be required to supply working production components specified in this Specification within 14 calendar days from the purchase order date. Failure to do so will render the bid non-responsive.

C. Paragraph B. will not be required if, prior to the bid opening, the bidder demonstrated to the city that the equipment bid meets these specifications.

4.7 WARRANTY

A. The manufacturer of the required infrared priority control system will warrant that, provided the priority control system has been properly installed, operated and maintained, component parts of a matched component system (see Section II) that prove to be defective in workmanship and/or material during the first five (5) years from the date of shipment from the manufacturer will be covered in a documented system-protection plan, plus provide an added five-year maintenance coverage for repair or replacement at a fixed deductible charge for a total of ten (10) years of product coverage.

B. The protection plan will warrant that component parts of a matched component system that are not subject to coverage limitations and prove to be defective in workmanship and/or material during the first five (5) years from the date of shipment from manufacturer will be repaired at no charge, and that extended coverage with a fixed repair deductible will be available for an additional five (5) years.

C. In total, the warranty/maintenance coverage must assure that system components will be available to allow system operation during the ten (10) year warranty/maintenance coverage.

D. A copy of the manufacturer's written warranty outlining the conditions stated above will be supplied with the bid. Coverage and coverage limitations are to be administered as detailed in the manufacturer's Warranty/Maintenance document.

4.8 CERTIFICATE OF INSURANCE

The manufacturer of the required infrared priority control system will provide a certificate of product liability insurance protection for $5,000,000 assuring the priority control user that the manufacturer is insured against civil damages if proven to be at fault for an accident due to equipment failure within the system of matched priority control components. This certificate, however, need not, and is not meant to, provide liability insurance protection to the priority control system dealer, installer or user.

4.9 CERTIFICATION

The manufacturer of the required infrared priority control system will certify that all component products are designed, manufactured and tested as a system of matched components and will meet or exceed the requirements of this specification.

4.10 Determination of suitability

The following equipment shall be provided as part of this project:

4.11.1 Emitters

"Optical Emitters" supplied as part of this contracts shall be in accordance with Sec. 4.3.1 of these Special Provisions complete with all necessary mounting hardware and connectors. Unit shall be GTT Opticom 794H. or pre-approved equal.

4.11.2 Remote Coding Unit

"Remote Coding Unit " in accordance with Sec. 4.3.2 of these Special Provisions complete with all necessary cables and connectors. Remote Coding Unit shall be GTT Opticom RC790 or pre-approved equal..

4.11.3 Detectors

Four "Optical Detectors" in accordance with Sec. 4.3.3 of these Special Provisions complete with all necessary mounting hardware and connectors, shall be furnished for each intersection supplied under these Special Provisions. Optical detector shall be bi-directional up to 180°. Unit shall be GTT Opticom 721. or pre-approved equal.

4.11.4 Detector Cable

"Detector Cable" in accordance with Sec. 4.3.4 of these Special Provisions shall be furnished for the entire intersection under these Special Provisions. Cable shall be GTT Opticom or pre-approved equal.

4.11.5 Phase Selector

"Multimode Phase Selector" in accordance with Sec. 4.3.1 of these Special Provisions complete with all necessary mounting hardware and connectors, shall be furnished with each cabinet supplied under these Special Provisions. Unit shall be GTT Opticom 764 or pre-approved equal.

4.11.6 Card Rack

"Card Rack" in accordance with Sec. 4.3.6 of these Special Provisions shall be GTT rack.

4.11.7 System Interface Software

"System Interface Software" in accordance with Sec. 4.3.7 of these Special Provisions shall be furnished. Software shall be provided on either CD, DVD or "flash memory" USB drive.

4.11.8 System Central Management Software

"System Central Management Software" in accordance with Sec. 4.3.8 of these Special Provisions shall be furnished. License shall be provided to authorize server software on one server and two Clients. Server License shall be for 10 intersections. Software shall be provided on either CD, DVD or "flash memory" USB drive.

4.11.9 Serial to Ethernet Port Server

"Serial to Ethernet Port Server" in accordance with Sec. 4.3.9 of these Special Provisions shall be furnished. Unit shall be Comtrol RTS 2-Port or pre-approved equal.

5. CONFLICT MONITOR

5.1 General description and requirements

The conflict monitor shall meet or exceed the standards of NEMA Publication TS 1-1989, Section 2 and 6, for 12 Channel Conflict Monitors for use in traffic control systems.

5.2 Features

The conflict monitor shall be a 12-channel NEMA type monitor with the following special features:

5.2.1 All features are easily programmable using the 20-key keypad and 16 column by 4 line LCD display.

5.2.2 Have an input system with audible tone to indicate an Accept or Reject entry feature.

5.2.3 AC Line Monitor - the incoming voltage must be able to be monitored and viewed during operation. Dips, surges, and long term over-voltage conditions are to be logged. A display listing the number of power disturbances since the last start up and a log of at least 30 previous power events shall be provided.

5.2.4 Monitor shall have on board diagnostics.

5.2.5 Monitor shall have Security level of entry.

5.2.6 Monitor shall be able to store up to 20 previous Faults in non-volatile memory.

5.2.7 Monitor shall be able to store up to 30 previous power events in non-volatile memory.

5.2.8 Monitor shall be capable of programming per channel the minimum Short Green interval.

5.2.9 Monitor shall be capable of programming per channel the minimum Short Yellow interval.

5.2.10 Monitor shall be capable of programming per channel the Red Fail Inhibit.

5.2.11 A RS232 communications port shall be on the monitor so that conflicts, type of conflicts and power failure information can be dumped to a printer, laptop computer, or to a communication system through a traffic controller.

5.2.12 A cable shall be provided to link the conflict monitor to the Traffic signal controller.

5.3 Compatibility

Unit shall be fully compatible and provide communication with the traffic signal controller required under these special provisions.

6. TRAFFIC SURVEILLANCE EQUIPMENT

6.1 Four port Video Server

1.
2.
3.
4.
5.
6.
7.
8.
9.

6.1.1 Shall connect up to four analog cameras and transmit digital video from all four channels simultaneously via an Ethernet connection.

6.1.2 Shall provide a minimum resolution of 720X576.

6.1.3 Frame rate Motion JPEG Up to 25 (NTSC/PAL) fps or greater

6.1.4 Video streaming shall be Motion JPEG with controllable frame rate and bandwidth

6.1.5 Image settings required;

6.1.5.1 Compression
6.1.5.2 Color
6.1.5.3 Rotation
6.1.5.4 Aspect ratio correction
6.1.5.5 Text and image overlay
6.1.5.6 Privacy mask
6.1.5.7 De-interlace filter

6.1.6 Required Security;

6.1.6.1 Password protection
6.1.6.2 IP address filtering
6.1.6.3 HTTPS encryption
6.1.6.4 IEEE 802.1X network access control

6.1.7 Required Protocols Supported;
IPv4/v6,HTTP,HTTPS, QoS layer 3 DiffServ,FTP,Bonjour, UPnP,SNMPv1/v2c/v3(MIB-II),DNS,DynDNS, TCP,UDP,ICMP,DHCP,ARP,SOCKS,

6.1.8 3MB Video buffer required pre and post alarm per channel

6.1.9 Video motion detection required

6.1.10 Minimum alarm triggers shall be intelligent video and external input

6.1.11 Alarm events actions shall include:

6.1.11.1 File upload via FTP
6.1.11.2 HTTP and email
6.1.11.3 Notification via email
6.1.11.4 HTTP and TCP
6.1.11.5 External output activation

6.1.12 Pan/Tilt/Zoom control:

6.1.12.1 min 20 presets/camera
6.1.12.2 guard tour capable
6.1.12.3 PTZ control queue
6.1.12.1 Shall support Windows compatible joysticks

6.1.13 Shall utilize ETRAX 100LX and ARTPEC-2 processors

6.1.14 Provide a min of 32 MB of RAM and 8 MB Flash

6.1.15 Power range 7-20V DC, max 8W

6.1.16 Minimum Connectors

6.1.16.1 Analog composite video NTSC/PAL auto-sensing:

6.1.16.1.1 Four (4) ea BNC inputs
6.1.16.1.2 RJ-45 10BASE-T/100BASE-TX

6.1.16.2 Terminal Block:

6.1.16.2.1 I/O terminal block for four configurable inputs/outputs
6.1.16.2.2 RS-485/ RS-422

6.1.16.2.3 D-sub for RS-232 port

6.1.17 Operating conditions

6.1.17.1 5 – 50 °C (41 – 122 °F)

6.1.17.2 Humidity 20 – 80% RH (non-condensing)

6.1.18 Required accessories

6.1.18.1 Power Supply

6.1.18.2 mounting and connector kits

6.1.18.3 Installation Guide

6.1.18.4 User's Manual

6.1.18.5 Axis Camera Station Five license Upgrade for Windows version of software.

6.1.18.6 Video Surveillance Joystick

6.1.18.7 Cables and cords or connectors

6.1.18.8 64 GB micro SD memory card (Sandisk Ultra plus)

6.1.19 Accepted model shall be AXIS P7214 or pre-approved equal.

6.2 Ethernet Pan/Tilt/Zoom Camera

10.
11.
12.
13.
14.
15.
16.
17.
18.

6.2.1 Image sensor shall be ¼" ExView HAD progressive scan CCD

6.2.2 Lens f=3.4 – 119 mm, F1.4 – 4.2, autofocus, automatic day/night
Horizontal angle of view: 55.8° - 1.7°

6.2.3 Minimum illumination
Color: 0.5 lux at 30 IRE F1.4
B/W: 0.008 lux at 30 IRE F1.4

6.2.4 Shutter time 1/30000 s to 0.5 s (60 Hz), 1/30000 s to 1.5 s (50 Hz)

6.2.5 Pan/tilt/zoom:
E-flip, 100 preset positions
Pan: 360° endless, 0.05° – 450°/s
Tilt: 220°, 0.05° – 450°/s
35x optical zoom and 12x digital zoom, total 420x zoom

6.2.6 Pan/tilt/zoom functionalities:
Guard tour
Control queue
On-screen directional indicator

6.2.7 Video Compression shall be H.264 (MPEG-4 Part 10/AVC) Motion JPEG

6.2.8 Minimum Resolutions:
1920X1080

6.2.9 Frame Rate:
H.264: Up to 30/25 fps (60/50 Hz) in all resolutions
Motion JPEG: Up to 30/25 fps (60/50 Hz) in all resolutions

6.2.10 Video streaming:
Multiple, individually configurable streams in H.264 and Motion JPEG
Controllable frame rate and bandwidth VBR/CBR H.264

6.2.11 Image settings:
Wide dynamic range (WDR), electronic image stabilization (EIS),
manual shutter time, compression, color, brightness, sharpness,
white balance, exposure control, exposure zones, backlight
compensation, fine tuning of behavior at low light, rotation,
aspect ratio correction, text and image overlay, privacy mask,
image freeze on PTZ

6.2.12 Security:
Password protection, IP address filtering, HTTPS encryption*,
IEEE 802.1X network access control*, digest authentication,

user access log

6.2.13 Supported protocols:
IPv4/v6, HTTP, HTTPS*, SSL/TLS*, QoS Layer 3 DiffServ, FTP, SMTP, Bonjour, UPnP, SNMPv1/v2c/v3 (MIB-II), DNS, DynDNS, NTP, RTSP, RTP, TCP, UDP, IGMP, RTCP, ICMP, DHCP, ARP, SOCKS

6.2.14 56 MB Video buffer required pre and post alarm

6.2.15 Video motion detection and auto-tracking required

6.2.16 Minimum alarm triggers shall be intelligent video and external input

6.2.17 Alarm events actions shall include:

6.2.17.1 File upload via FTP

6.2.17.2 HTTP and email

6.2.17.3 Notification via email

6.2.17.4 HTTP and TCP

6.2.17.5 local storage

6.2.18 Enclosure shall include:
IP66- and NEMA 4X-rated metal casing (aluminum), acrylic (PMMA) clear dome, sunshield (PC/ASA)

6.2.19 Shall utilize ARTPEC-3 processor

6.2.20 Provide a min of 128 MB of RAM and 128 MB Flash

6.2.21 Power High Power over Ethernet (High PoE) IEEE 802.3at, max. 60 W

6.2.22 Connectors RJ-45 for 10BASE-T/100BASE-TX PoE IP66-rated RJ-45 connector kit shall be included

6.2.23 SD/SDHC memory card slot shall be provided with 4GB card included

6.2.24 Operating conditions:
-40 °C to 50 °C (-40 °F to 122 °F) Arctic Temperature Control enables camera start-up at temperatures as low as -40 °C (-40 °F)

6.2.25 Required accessories

6.2.25.1 Power Supply (POE Injector)

6.2.25.2 Pole mounting Bracket (Axis T91A67)
and connector kits 6.2.25.3 Installation Guide

6.2.25.4 User’s Manual

6.2.25.5 Axis Camera Station Single license Upgrade for Windows version of software.

6.2.25.6 Video Surveillance Joystick

6.2.25.7 Cables and cords or connectors

6.2.25.8 clear and smoked dome cover

6.2.25.9 sunshield

6.2.25.10 installation and management tools software on CD or Flash Drive

6.2.25.11 recording software on CD or Flash Drive

6.2.25.12 64 GB micro SD memory card (Sandisk Ultra plus)

6.2.26 Accepted model shall be AXIS Q6045-E Mk II or pre-approved equal.

7. INTERCONNECT COMMUNICATIONS EQUIPMENT

7.1 Wireless Ethernet Interconnect radio

7.1.1 Description.

Ethernet radio for interconnect purposes shall be furnished and installed in the cabinet and at locations shown on the plans. Equipment shall be shall include all labor, equipment, and material required to install a Wireless Interconnect, Ethernet, Access Point, Remote, and/or Antenna at an intersection location to provide wireless traffic signal interconnection compatible with solid state pre-timed or actuated traffic signal control equipment and cabinet environments. This includes a wireless closed loop interconnect package, shelf mounted unit, processor (with radio modem, when appropriate), power supply, surge protection, antennas, mounting brackets, hardware assembly, fittings, cable, connectors, grounding, and other material required to complete the work.

7.1.2.System Requirements:

This specification covers the minimum technical requirements for a 5.8 GHz wireless broadband Ethernet system for ITS communications. The system shall consist of connectorized radios and/or radios with integrated panel antennas.

7.1.3 Functional Capabilities:

The system shall function as point-to-point or point-to-multipoint (backhaul), MESH node, repeater and hotspot radio, for a range of 60 miles (with L.O.S.) or greater.

7.1.3.1Radio Specifications:

7.1.3.1.1 The radio shall operate in a Dynamic Frequency Selection mode between multiple frequency bands from 5.2 GHz UNII to 5.8 GHz ISM non overlapping channels. 5MHz, 10MHz and 20MHz, and 40 MHz channels shall be available.

7.1.3.1.2 The system shall function as point-to-point or point-to-multipoint (backhaul), MESH node, repeater and hotspot radio, for a range of 60 miles (with L.O.S.) or greater. The system shall function as point-to-point or point-to-multipoint (backhaul), MESH node, repeater and hotspot radio, for a range of 60 miles (with L.O.S.) or greater. Each unit is software configurable as a master (AP), remote (SU), MESH node, hotspot, or repeater. It is not acceptable to have different units for each mode of operation.

7.1.3.1.3 The radio shall operate as E-Orthogonal Frequency Division Multiplexing (E-OFDM).

The radio shall operate with a WiMax proprietary protocol named EN-Stream/ EmaX protocol to provide up to 108Mbps

7.1.3.1.4 The radio shall also be capatible with 802.11a IEEE strandards

7.1.3.1.5 The radio shall utilize adaptive modulation to ensure connectivity in low signal environments.

7.1.3.1.6 The radio minimum receiver sensitivity must be -97 dBm.

7.1.3.1.7 The radio must have a minimum transmit output power of 600mW.

7.1.3.1.8 The remote power system shall accept input power of 120 – 240 VAC, 50 – 60 Hz. The remote power system shall output 18VDC with a maximum current of 1 amp.

7.1.3.1.9 The radio shall operate with a voltage of 18VDC with a typical current draw of 0.4amps. It shall be also be capable of receiving Power over Ethernet (POE) with adequate lightning and surge protection provided.

7.1.3.1.10 The unit shall operate from -40º C to +80º C with a maximum relative humidity of 95%, non con-condensing. It shall be rated for outdoor use per IP67.

7.1.3.1.11 All radios shall be equipped with advanced security features such as WPA2 encryption, RADIUS server authentication, and MAC address authentication.

7.1.3.1.12 As a minimum, each radio must contain the following networking features: STP (spanning tree protocol), DHCP server/ client, NTP, Firewall and NAT routing, QOS, VPN, VLAN, SNMP.

7.1.3.1.13 All mounting hardware for the radios and antennas, including Cat5e or better industrial outdoor rated cable shall be included as indicated on the plans.

7.1.3.2 Antennas:

7.1.3.2.1 The connectorized radio system shall be provided with external Omni, Sector or Panel antennas with a maximum gain of 23dBi. The antennas shall be provided with a N female connector. The antennas shall be available for pole or wall mounting. The connectorized radio shall be housed in a die cast aluminum housing not to exceed 8.5”W x 7”H x 2”D. The radio shall weigh no more than 3lbs and be IP67 weatherproof rated.

7.1.3.2.1 The radio system may also be provided with an integrated flat panel antenna with a 23dBi gain. The integrated antenna assembly shall include the flat panel antenna and radio housed in a UV stabilized plastic housing and attached to the flat panel antenna. The integrated flat panel must be a diamond shape. The antenna shall be made from die cast aluminum and arranged for pole or wall mount. The flat panel antenna assembly shall be 13”W x 13”H x 3”D and weigh no more than 5 lbs. The integrated unit shall be IP67 weatherproof rated.

7.1.3.3 Cable

All cable whether it is coaxial, category 5e or category 6 shall be in accordance with the manufacturer’s recommendations and shall be installed either from each antenna to the radio housed in the cabinet or from an intermediate enclosure. Routing of all cable shall be through existing and new conduits and poles; external installation will not be allowed. Refer to the manufacturer’s recommendations. It will be the Contractor’s responsibility to determine length of cable required but shall not exceed the radio manufacturer’s recommendations for proper operation.

7.1.4 Configuration:

The radio system shall be provided with Windows based software that allows for configuration and diagnostics of the radio system. The software package shall allow the operator to communicate with all similar radios in the system including 900Mhz, 2.4GHz, 4.9ghz ethernet radios and Serial data radios. There shall be a real time signal strength monitor to optimize antenna placement. It shall be possible to obtain real-time monitoring of signal strength, authentication of data, system uptime, data rate and channel selection. The software must also provide a real-time bandwidth measurement tool. A spectum analyzer feature must be present.

The software must be capable of generating automated reports of the wireless system health. This information must include: Signal Strength (dBm), Bandwidth Availability (Mbps), Noise Floor (dBm)

A Web browser interface must also be available to configure the radios.

7.1.5 Compliance:

The radio system shall comply with all applicable 802.11a IEEE industry networking standards, FCC and UL requirements.

7.1.6 Warranty:

The manufacturer shall guarantee that all material supplied shall be free from all defects in materials and workmanship for a period of THREE (3) year from date of shipment.

7.1.7 Software:

Any software required to provide full capability for the radio system supplied in this provision shall be included at no additional cost and be provided prior to signal turn on. It shall include software required for setup, configuration, management or troubleshooting.

Media shall be either Compact Disc (CD) or portable USB “flash” memory device.

7.1.8 Determination of Suitability

7.1.8.1 The radio supplier or its authorized representative shall verify by written certification that said radios are fully compatible with said traffic controller equipment; certification shall be prior to installation. All radios supplied shall be of the same type (manufacturer, model series, etc.).

7.1.8.2 Any manufacturer of traffic signal control equipment or controller cabinets to be supplied under these Special Provisions shall provide a field and factory demonstration of the equipment proposed to be supplied. The demonstration shall be of equipment that has operated satisfactorily in accordance with specifications for a minimum of 180 calendar days subsequent to final acceptance by the jurisdiction to which it was supplied. This equipment shall have been performing those functions proposed under this contract. The demonstration shall be to **two members of the City of Victorville Engineering Department designated by the City Traffic Engineer.** The two person review team will determine the suitability of the equipment and their report shall be the final authority for determination of suitability of the proposed equipment. All expenses incurred in providing these demonstrations shall be the responsibility of the manufacturer of the proposed equipment.

7.1.8.3 Ethernet Radios shall be ENCOM Energy 300Mbps Wireless Broadband System. Any departure Special Provisions shall require Determination of Suitability of the proposed alternate equipment in accordance with Sec. 8.16 of these Special Provisions **prior to award of contract**. Failure to achieve a Determination of Suitability for the proposed alternate equipment shall be considered cause for rejection of the project bid as non-responsive.

7.2 FIBER OPTIC CABLE

Fiber optic cable shall conform to the details shown on the plans and these special provisions.

The following definitions shall apply to these special provisions:

A. Active Component Link Loss Budget.-The active component link loss budget is the difference between the average transmitter launch power (in dBm) and the receiver maximum sensitivity (in dBm).

B. Mainline.-Fiber cable (or assigned fiber strands) that provides connections between the TMC and Gigabit Ethernet communication hubs, as well as between equipment rooms or buildings, and between Gigabit Ethernet communication hubs. The term is used interchangeably with "trunk" and "backbone" cable.

C. Connector.-A mechanical device used to align and join two fibers together to provide a means for attaching to and decoupling from a transmitter, receiver, or another fiber (patch panel).

D. Connectorized.-The termination point of a fiber after connectors have been affixed.

E. Connector Module Housing (CMH).-A patch panel used to terminate single mode fibers with most common connector types. It may include a jumper storage shelf and a hinged door.

F. Couplers.-Devices which mate fiber optic connectors to facilitate the transition of optical light signals from one connector into another. They are normally located within FDUs, mounted in panels. They may also be used unmounted, to join two simplex fiber runs.

G. Distribution Cable.-Fiber cable (or assigned fiber strands) that provides connections between hubs and the local field devices via the drop cable. For this project, the mainline and distribution cable will be the same fiber optic cable. Drop cables are typically spliced into a distribution cable.

H. Drop Cable.-Fiber cable that provides connections between a distribution cable to a field element. Typically these run from the splice closure installed in a splice vault/pull box to a splice tray/fiber patch panel/wall interconnect center within a field cabinet. Drop cables are usually short in length (less than 20m) and are of the same construction as outside plant cable. The term "breakout cable" is used interchangeably with drop cable.

I. End-to-End Loss.-The maximum permissible end-to-end system attenuation is the total loss in a given link. This loss could be the actual measured loss, or calculated using typical (or specified) values. A designer should use typical values to calculate the end-to-end loss for a proposed link. This number will determine the amount of optical power (in dB) needed to meet the System Performance Margin.

J. Fan Out Termination.-Permits the branching of fibers contained in an optical cable into individual cables and can be done at field locations; thus, allowing the cables to be connectorized or terminated per system requirements. A kit provides pull-out protection for individual bare fibers to support termination. It provides three layers of protection consisting of a Teflon inner tube, a dielectric strength member, and an outer protective PVC jacket. Fan out terminations shall not be used for more than 6 fibers. Using a patch panel would be appropriate.

K. Fiber Distribution Frame (FDF) .-A rack mounted system that is usually installed in hubs or the Transportation Management Center (TMC), that may consist of a standard equipment rack, fiber routing guides, horizontal jumper troughs and Fiber Distribution Units (FDU). The FDF serves as the termination and interconnection of passive fiber optic components from cable breakout, for connection by jumpers, to the equipment.

L. Fiber Distribution Unit (FDU) .-An enclosure or rack mountable unit containing both a patch panel with couplers and splice tray(s). The unit's patch panel and splice trays may be integrated or separated by a partition.

M. FIO.-Fiber optic.

N. FOIP.-Fiber optic inside plant cable.

O. FOOP.-Fiber optic outside plant cable.

P. FOTP.-Fiber optic test procedure(s) as defined by TIA/EIA standards.

Q. Jumper.-A short cable, typically one meter or less, with connectors on each end, used to join two CMH couplers or a CMH to active electronic components.

R. Light Source.-Portable fiber optic test equipment that, when coupled with a power meter, is used to perform end-to-end attenuation testing. It contains a stabilized light source operating at the wavelength of the system under test.

S. Link.-A passive section of the system, the ends of which are connectorized. A link may include splices and couplers. For example, a video link may be from a F/O transmitter to a video multiplexer (MUX).

T. Loose Tube Cable.-Type of cable construction in which fibers are placed in buffer tubes to isolate them from outside forces (stress). A flooding compound or material is applied to the interstitial cable core to prevent water migration and penetration. This type of cable is primarily for outdoor applications.

U. Mid-span Access Method.-Description of a procedure in which fibers from a single buffer tube are accessed and spliced to an adjoining cable without cutting the unused fibers in the buffer tube, or disturbing the remaining buffer tubes in the cable.

V. MMF0.-Multimode Fiber Optic Cable.

W. Optical Time Domain Reflectometer (OTDR) .-Fiber optic test equipment similar in appearance to an oscilloscope that is used to measure the total amount of power loss in a F/O cable between two points. It provides a visual and printed display of the losses associated with system components such as fiber, splices and connectors.

X. Optical Attenuator.-An optical element that reduces the intensity of a signal passing through it.

Y. Patchcord.-A term used interchangeably with "jumper".

Z. Patch Panel.-A precision drilled metal frame containing couplers used to mate two fiber optic connectors.

AA. Pigtail.-A short optical fiber permanently attached to a source, detector, or other fiber optic device.

AB. Power Meter.-Portable fiber optic test equipment that, when coupled with a light source, is used to perform end-to-end attenuation testing. It contains a detector that is sensitive to light at the designed wavelength of the system under test. Its display indicates the amount of optical power being received at the end of the link.

AC. Riser Cable,-NEC approved cable installed in a riser (a vertical shaft in a building connecting floors).

AD. Segment.-A section of F/O cable that is not connected to any active device and may or may not have splices per the design.

AE. SMF0.-Single mode Fiber Optic Cable.

AF. Splice.-The permanent joining of two fiber ends using a fusion splicer.

AG. Splice Closure.-A environmentally sealed container used to organize and protect splice trays. The container allows splitting or routing of fiber cables from multiple

locations. Normally installed in a splice vault.

AH. Splice Module Housing (SMH) .-A unit that stores splice trays as well as pigtails and short cable lengths. The unit allows splitting or routing of fiber cables to or from multiple locations.

Al. Splice Tray.-A container used to organize and protect spliced fibers.

AJ. Splice Vault.-An underground container used to house excess cable andlor splice closures.

AK. System Performance Margin.-A calculation of the overall "End to End" permissible attenuation from the fiber optic transmitter (source) to the fiber optic receiver (detector). The system performance margin should be at least 6 dB. This includes the difference between the active component link loss budget, the passive cable attenuation (total fiber loss) and the total connector/splice loss,

AL.Tight Buffered, Non-Breakout Cable (Tight Buffer Cable).-Type of cable construction where each glass fiber is tightly buffered (directly coated) with a protective thermoplastic coating to 900 pm (compared to 250 pm for loose tube fibers)

7.2.1 FIBER OPTIC OUTSIDE PLANT CABLE

General

Fiber optic cables shall be supplied in the configurations shown on the plans and specified in these Special Provisions.

There shall be two (2) principal cable types as well as incidental cabling procured under this specification. They are identified using a naming convention of "distribution cable" which shall contain twenty-four (24), forty-eight (48) or seventy-two (72)single-mode optical fibers, and a "drop cable" which shall contain twentyfour (24) single-mode optical fibers, as noted in the Plans. Note that strands of the distribution cable may be allocated for backbone communication, which is communication between Gigabit Ethernet switches. Each fiber optic cable shall be suitable for both underground duct placement and indoor application. The fiber optic cable shall be plenum and fire rated.

Additionally, there will be ancillary connecting (patching) optical fiber cables procured under this Contract and these Special Provisions, which are more precisely described elsewhere in this document or as shown on the Plans.

Distribution and drop cable shall be central core fiber optic cable manufactured specification for installation in microduct by air blown or push installation applications.

All materials furnished, assembled, fabricated or installed under this item shall be new, corrosion resistant and in strict accordance with the details shown on the plans and in these Special Provisions, All fibers in the cables shall be usable fibers and free of surface imperfections and occlusions, in order to meet or exceed all of the optical, mechanical, and environmental requirements contained in these Special Provisions.

All cables shall be free of material or manufacturing defects and dimensional non-uniformity that would:

- Interfere with the cable installation employing accepted cable installation practices.
- Degrade the transmission performance and environmental resistance after installation.
- Inhibit proper connection to interfacing elements.
- Otherwise yield an inferior product.
- Each fiber optic outside plant cable for this project shall be all-dielectric, dry waterblocking material, duct type, with loose buffer tubes, and shall conform to these Special Provisions.

The Contractor shall furnish, install, splice and test all the required fiber optic cable. All splicing kits, fiber

optic cable caps, moisture/water sealants, terminators, splice trays, patch cords, connectors, pig tails and accessories to complete the fiber optic network shall be provided as incidentals. All equipment for installation, splicing and testing shall be provided by the Contractor.

All fiber optic glass/cable on this project shall be from the same manufacturer who is regularly engaged in the production of optical fiber material.

The cable shall be qualified as compliant with Chapter XVII, of Title 7, Part 1755.900 of the Code of Federal Regulations, "REA Specification for Filled Fiber Optic Cables."

Below is the City-designation for the fiber optic cable by strand count.

CABLE TYPE	DESCRIPTION
A	2SMFO
B	4SMFO
C	6SMFO
D	8SMFO
E	12SMFO
F	24SMFO
G	36SMFO
H	48SMFO
J	60SMFO
K	72SMFO
L	144SMFO

Packaging

1. The completed cable shall be packaged for shipment on non-returnable wooden reels. Required cable lengths shall be stated in the purchase order.

2, Top and bottom ends of the cable shall be available for testing

3. Both ends of the cable shall be sealed to prevent the ingress of moisture.

4. Each reel shall have a weather resistant reel tag attached identifying the reel and cable.

Cable Marking

1. The optical fiber cable outer jacket shall be marked with manufacturer's name, the month and year of manufacture, the words "Optical Cable," telecommunications handset symbol as required by Section 350G of the National Electrical Safety Code (NESC®) fiber count, fiber type, and sequential meter marks,

2. The markings shall be repeated every two (2) feet.

3. The actual length of the cable shall be within ±I% of the length marking

4. The marking shall be in a contrasting color to the cable jacket,

5. The marking shall be permanent and weatherproof.

Quality Control

The manufacturer(s) of supplied optical cable, optical cable assemblies, and hardware shall be TL 9000 and/or IS0 9001 registered. All cabled optical fibers shall be 100% attenuation tested by the manufacturer at the factory. The attenuation of each fiber shall be provided with each cable reel.

General Considerations -Microduct Fiber Optic Cable

The fiber optic cable shall consist of, but not be limited to, the following components:

- 24-strand count single-mode optical fiber, 12 fiber strands per bundle for backbone1 distribution cable, as noted on the Plans.
- 12-strand count single mode optical fiber, 12 strands per bundle for drop cable.
- Ripcord
- Central tube
- Dielectric strength members
- HDPE outer jacket
- Specifically designed for air blown installation in microduct
- 24 strand sized for installation in 12110mm Microduct
- 12 strand sized for installation in 1018mm Microduct
- Central core (Microduct) fiber optic cable shall be Ductsaver FX Cable, by OFS. Any other cable meeting the above specifications shall also be considered per approval by Engineer.

Color Coding

The colors shall be targeted in accordance with the Munsell color shades and shall meet TINEIA-598B "Color Coding of Fiber Optic Cables" and RUS 7 CFR 1755.900.

The color formulation shall be compatible with the fiber coating and the buffer tube filling compound, and be heat stable. It shall not fade or smear or be susceptible to migration, it shall not affect the transmission characteristics of the optical fibers and shall not cause fibers to stick together.

Fiber Characteristics

One hundred percent (100%) of the optical fibers shall meet or exceed the requirements contained in this specification.

The cable shall be tested in accordance with TINEIA-455-3A (FOTP-3), "Procedure to Measure Temperature Cycling Effects on Optical Fiber, Optical Cable, and Other Passive Fiber Optic Components." The average change in attenuation at extreme operational temperatures (-40 "C to +70 "C) will not exceed 0.05 dBlkm at 1550 nm. The magnitude of the maximum attenuation change of each individual fiber will not be greater than 0.15 dBlkm at 1550 nm. This figure includes an allowance of up to 0.05 dBlkm for measurement repeatability.

All fibers within the finished cable shall be composed primarily of silica and shall have a matched clad index of refraction profile.

Splice Vaults and Concrete Pull Boxes for Fiber optic Cables,

The Contractor shall furnish and install Splice Vaults and concrete Pull Boxes for fiber optic cables as specified and shown.

Concrete Pull Boxes

Pull Boxes shall be Type 7, 24”x36” Composolite. The vaults shall have a minimum 24 inches depth below surface and may be obtained by stacking vaults. The base of the vault shall have gravel to a depth of 2 inches or as directed by the Engineer. All pull boxes shall be grouted with drain. The cover of the vaults shall be designed for H-20 loading where located on the roadway and pedestrian loading where located outside the roadway. The cover shall have identification lettering as directed by the Engineer.

Splice Vaults

Splice Vaults shall be provided as shown on the plans and where splicing of “Backbone Fiber Cable” occurs. Splice Vaults shall be a minimun of 30”X48”. Splice vaults not located in sidewalk shall be Polymer Concrete such as Armorcast A6001430 or equal. Splice vaults located in sidewalk may be FRP such as Armorcast A6001550 or equal. All Splice Vault covers shall be Polymer Concrete and shall be rated for min 10,000 LBS.

PAYMENT

Full compensation for the required conduits for fiber optic cables, concrete pull boxes and Splice Vaults shall include full compensation for furnishing all labor, materials, tools, and equipment incidentals for doing all the work as herein provided. No additional compensation will be allowed.

CONDUITS FOR FIBER OPTIC CABLES

The Contractor shall furnish and install conduits for fiber optic cables as specified and shown.

CONDUITS

The conduit installed by trenching or other approved method in straight runs. If bends are require during installation, they must sweeping bends. All such sweeping bends shall be approved by the Engineer before installation. Conduit shall have a minimum cover of 24 inches as measured from the finised grade at locations not under the roadway and 36 inches under the roadway. Conduit shall have a minimum of 48 inches of cover wher placed under future roadway pavement. Coduit shall have a minimum separation of 12 inches of earth from any foreign substructures, or otherwise approved by the Engineer. Vault spacing shall be no more than 480 feet or as directed by the Engineer. Conduits shall meet the following requirements:

(a) All conduits shall be UL approved.

(b) 3-in diameter PVC schedule 40 or high density polyethylene (HDPE) conduits with pull cord where the conduits are not located under the roadway.

(c) 3-in diameter PVC schedule 80 or high density polyethylene (HDPE) conduits with pull cords where the conduits are located under the road way.

(d) One of the 3-in conduits shall be fitted with three 1-in diameter inner ducts with pull cords for fiber optic cables. The inner ducts shall be HDPE or equal materials and color coded as directed by the Engineer.

(e) Each of the 3-in conduits shall contain a #12 min copper ground wire that shall be continous between pull boxes. This conductor shall facilitate marking of underground conduit locations.

Conduit shall not extend more than 3 inches inside a vault. All coduit joints shall be sealed with the appropriate cement to ensure that two conduit pieces bond to one another to form a solid waterproof link. All conduit ends shall be sealed to minimze water ingress. If not already preinstalled by the manufacturer, a polyester tape with a minimum rated strength of 1250 pounds shall be installed in each conduit for future use. This tape shall have foot markes and be labeled every two feet. A solid #12 copper tracer wire shall be installed for locating the conduit.

All conduites shall be marked in the ground with a bright orange (preferably “ULCC” orange) or yellow warning tape at least 3 inches wide. The marking tape shall have integrated metallic mesh or cable to allow for easy detection. The marking tape shall be burried directly above the conduit run at a depth of approximately 12 inches bellow finish grade. The marking tape shall read “WARNING – OPTICAL CABLE” or other wording approved by the Engineer.

The conduit may be installed by either open trench, directional bore or trenching in pavement (rock saw) at the option of the Contractor. All utility pot hole, trench repair, concrete repair, asphalt repair in street, sidewalk, curb and gutter and otherwise due to activities required for installing the conduit for fiber optic conduit shall be the responsibility of the Contractor at no additional cost.

It shall be the responsibility of the Contractor to follow all legal requirements for underground utility locating.

PAYMENT

Full compensation for the required conduits for fiber optic cables shall include furnishing all labor, materials, tools, and equipment incidentals for doing all the work as herein provided. It shall include but not be limited to trenching or boreing, compaction, asphalt and concrete repair and replacement for conduit installation and pot hole requirements, All asphalt and concrete work associated with the installation of the fiber optic conduit shall be included in the per foot cost of the conduit. No additional compensation will be allowed.

Fiber Optic Cable Installation

The Contractor shall at his own expense, arrange to have a certified technician, qualified to work on the fiber optic cable.

Fiber optic cables shall be installed in continuous lengths without intermediate splices or terminations throughout the project, except at the location(s) specified in the Plans.

When ordering fiber optic cable the Contractor shall exercise extreme caution so as to ensure that no additional splicing or terminations, beyond that indicated in the Plans, shall be required. Should the Contractor believe additional splices are required; this matter shall be immediately brought to the attention of the Engineer for resolution.

The Contractor shall install the fiber optic cable in strict adherence to the manufacturer's recommended procedures. Care shall be taken to avoid cable damage during handling and placing. Fiber optic cable is sensitive to excessive pulling, bending and crush forces. The minimum bending and maximum tension requirements for installing the fiber optic cables shall be according to the manufacturer's specifications. The Contractor shall submit the manufacturer's recommended procedures to Engineer for blowing or pushing central core fiber optic cable to the Engineer for review and approval at least twenty (20) working days prior to installing cables.

Cable installation personnel shall be familiar with the cable manufacturer's recommended procedures including, but not limited to the following:

- Proper attachment to the cable for blowing or pushing during installation
- Cable tensile limitations and tension monitoring procedures.
- Cable bending radius limitations.

To accommodate long continuous installation lengths, bi-directional installation of the optical fiber cable is permissible and shall generally be implemented as follows:

1. From the midpoint of a pull station, blow/push of central core fiber, the optical fiber cable into the microduct/conduit from the shipping reel in accordance with the manufacturer's specifications.

2, When this portion of the blow/push of central core fiber, the remainder of the cable

should be removed from the reel to make the inside end available for blowing/pulling in the opposite direction.

3. This is accomplished by hand pulling the cable from the reel and laying it into large "figure eight" loops on the ground. The purpose of the figure eight pattern is to avoid cable tangling and kinking.

4. The figure eight loops shall be laid carefully one upon the other (to prevent subsequent tangling) and shall be in a protected area.

5. The inside reel end of the cable should be available for testing

6. Should it be necessary to set up a winch at an intermediate pull box, the required length of cable shall be pulled to that point and brought out of the pull box and coiled into a figure eight.

7. The figure eight is then turned over to gain access to the free cable end. This can then be reinserted into the conduit system for installation into the next section.

Air blown mechanical aids may be used to assist cable installation. Air blown mechanical aids shall be OFS approved for installation of fiber optic cable.

When power equipment is used to install optical fiber cabling, the installation speed shall not exceed manufacturer's recommendations.

Contractor's personnel shall be stationed at each vault and pull box through which the cable is to be installed to prevent kinking or other damage to the cable.

The Contractor shall submit detailed installation procedures (pull plan) for review twenty (20) working days prior to pulling in each optical fiber segment. The pull plan shall state the exact operational procedures to be utilized and identifies the physical locations for equipment placement, proposed equipment setup at each location, location of the manpower, the installation methodology and the estimated pulling tensions for each pull section.

Where the fiber optic cable is installed in existing conduct or utility ducts, at locations shown on plans, the Contractor shall remove all existing cables and install all cables in same pull to minimize risk of damage to cables, unless otherwise approved by Engineer. The Contractor shall be responsible for replacing any cables damaged during removal and reinstallation at the cost of the Contractor and not the City.

Cable slack shall be provided for each cable at each pull box, splice vault, or fiber optic splice location, as shown on the plans and as specified in these Special Provisions. Cable slack shall be divided equally on each side of a fiber splice closure. Sufficient slack shall also be provided at all pull boxes to facilitate placing the optical fiber cable against the side of the pull box.

At all pull boxes and cable vaults, cable slack, as shown on the plans, shall be left by the Contractor for all unspliced cable. Cable slack shall be installed in microduct couplers and shall be coiled and secured with tie wraps, coiled in pull boxes, and secured to the racking hardware in splice vaults. The Contractor shall ensure that the minimum bending radius of the optical fiber cable is not compromised when preparing this stored cable slack.

Unless otherwise specified on plans, a minimum of 30 feet of slack shall be coiled for each FIO cable inside each pull box and 60 feet inside each splice vault, controller or communication cabinet. Slacks within the cabinets shall be neatly arranged individually, coiled and tied by self-clinching nylon cable ties or other method approved by the Engineer.

Following the installation of the microduct and cables in conduit, all duct entrances in cabinets, pull boxes and vaults shall be sealed with mechanical plugs; or at the discretion of the Engineer, duct sealing compound, to prevent the ingress of moisture, foreign materials, insects and rodents.

Splicing

Field splices shall be done either in splice vaults, or cabinets as shown on the plans.
All splices in splice vaults shall be done in splice trays, housed in splice closures.
All splices in cabinets shall be done in splice trays housed in FDU's.

Unless otherwise specified, fiber splices shall be the fusion type. The mean splice loss shall not exceed 0.07 dB per splice. The mean splice loss shall be obtained by measuring the loss through the splice in both directions and then averaging the resultant values.

All splices shall be protected with a metal reinforced thermal shrink sleeve.

Field splicing is permitted for the following:

- Connection of cable reel sections as approved in advance by Engineer.
- Connection of a distribution cable to a drop cable or a breakout cable.
- Connection of drop cable or breakout cable to an optical fiber pigtail at communication equipment locations, or the patch panels in a hub equipment cabinet, or at the TMC.

The mid-span access method may be used to access the individual fibers in a cable for splicing to another cable as shown on the plans. Cable manufacturers recommended procedures and approved tools shall be used when performing a mid-span access. Only the fibers to be spliced may be cut. All measures shall be taken to avoid damaging buffer tubes and individual fibers not being used in the mid-span access.

The individual fibers shall be looped one full turn within the splice tray to avoid micro bending. A 45 mm minimum bend radius shall be maintained during installation and after final assembly in the optical fiber splice tray. Each bare fiber shall be individually restrained in a splice tray. The optical fibers in buffer tubes and the placement of the bare optical fibers in the splice tray shall be such that there is no discernable tensile force on the optical fiber.

The Contractor will be allowed to splice a total of 6 fibers to repair any damage done during midspan access splicing without penalty. The Contractor will be assessed a fine of $300.00 for each additional and unplanned splice. Any single fiber may not have more than 3 unplanned splices. If any fiber requires more than 3 unplanned splices, the entire length of F/O cable must be replaced at the Contractor's expense.

At equipment cabinets, single-mode optical fiber factory fabricated connectorized pigtails shall terminate at the rack-mounted fiber termination unit in each equipment cabinet and be connected to the optical interface to the Ethernet switch / fiber communication equipment with a suitable patch cord. All connected and stored cables shall be routed in each equipment cabinet in a manner that prevents damage during regular operation and maintenance functions. All exposed cable shall be secured every 300 mm to 450 mm to the equipment frame with nylon ties.

Equipment cabinets shall be equipped with splice trays suitable for storage and protection of each single-mode optical fiber pigtail and the splice connection to cable fibers. Equipment cabinets shall be equipped with a suitable means for routing and securing of cables, fibers, and pigtails to prevent damage to fibers during all regular operation and maintenance functions All splices shall be protected with a thermal shrink sleeve. Upon completion of the splicing operation, all waste material shall be deposited in suitable containers, removed from the job site, and disposed of in an environmentally acceptable manner.

Fiber Labelinq

1. Labeling of Cables

Labeling of the backbone, distribution and drop fiber optic cables shall conform to the following unique identification code elements:

HESP = Hesperia Road
NISQ = Nisqualli Road
BVRD = Bear Valley Rd
2ND = 2nd Avenue
3RD = 3rd Avenue
RRDR = Roy Rogers Drive
AMSA = Amargosa Road
MASA = Mariposa Rd
LUNA = Luna Rd
LAME = La Mesa Rd
CIVI = Civic Drive
DSPL = Desert Sky Plaza
DLGD = Del Gado Rd
ELEV = EL Evado Rd
PCMA= Pacoima Rd
PTLA = Petaluma Rd
AMST= Amethyst Rd
DSPL = Dos Palmas Rd
CTWD = Cottonwood Rd
BSLM =Balsam Rd
LCST = Locust Rd
1ST = 1st Avenue

UNIQUE IDENTIFICATION CODE ELEMENTS for Backbone, Distribution or Drop Cables		
DESCRIPTION	CODE	NUMBER OF CHARACTERS
District	District number	2
Cable Type	Fiber: S: Single mode M: Multimode Copper: T: 18 AWG, U: 19 AWG, V: 20AWG, W: 22AWG X: 24 AWG	1
Cable fiber (or copper pairs) Count	Number of fibers or conductor pairs (Examples: 144 fibers; or 100 TWP)	3
Route Number	Hwy. Rte (Example: 005)	3
Begin Function	T: TMC; H: HUB; V: Video Node; D: Data Node; C: Cable Node; M: CCTV Camera; N: CMS; P: Traffic Signal; Z: Ramp Meter; U: Traffic Monitoring/Count Station/Vehicle Count Station (VDS, TOS); S: Splice Vault	1
Begin Function Number	Unique ID number corresponds to Begin Function (Example: H02 [Hub 02])	2
End Function	T: TMC; H: HUB; V: Video Node; D: Data Node; C: Cable Node; M: CCTV Camera; N: CMS; P: Traffic Signal; Z: Ramp Meter; U: Traffic Monitoring/Count Station; S: Splice Vault	1
End Function Number	Unique ID number corresponds to Begin Function (Example: H03 [Hub 03])	2
Unique Identifier	XX: If two or more cables of the same count are in the same run	2
TOTAL		17

Each cable shall display one unique identification, regardless of where the cable is viewed. The begin function and end function correspond to the end points of each cable. The order of the begin and end function follow a hierarchy as listed below, where the lowest number corresponding to the begin/end function is listed first.

List of Hierarchy										
1	**2**	**3**	**4**	**5**	**6**	**7**	**8**	**9**	**10**	**11**
TMC	HUB	Video Node (VN)	Data Node (DN)	Cable Node	CCTV Camera	CMS	Traffic Signal	Ramp Meter	Traffic Monitoring/ Count Station	Splice Vault

This scheme will work as follows: A cable between the TMC and a HUB will always have the TMC listed as the start function and the HUB as the end function. Between a CMS and a Splice Vault, the start function will always be listed as the CMS, and so on. If a cable is connected between HUBS, for example HUB-01 and HUB-03, the lowest number, in this case HUB-01, will be listed as the start function and HUB-03 as the end function.

A. Example 1: **FVS048NISQ01H0101**

This cable is located in City of Victorville, identified as a single mode fiber optic cable containing 48 fibers, installed along Nisqualli Road, beginning in HESP, and ending in Hub 01, with unique ID of number 01. The implication for the unique ID is that there may be another 48 fiber optic cable between the HESP/NISQ and the hub. This is an example for a backbone cable.

B. Example 2: **FVS048HESPOIS02**

This cable is located in City of Victorville, identified as a single mode fiber optic cable containing 48 fibers, installed along Hesperia Road, beginning in Hub 01, and ending in Splice Vault 02. In this case, no additional digits are necessary for a unique ID. This is an example for a distribution cable.

C. Example 3: **FVS048CIVI03S04**

This cable is located in City of Victorville, identified as a single mode fiber optic cable containing 48 fibers, installed along Civic Dr., beginning at CMS-03, and ending in Splice Vault 04. In this case, no additional digits are necessary for a unique ID. This is an example for a drop cable.

2. Labeling of Jumpers and Pigtails

UNIQUE IDENTIFICATION CODE ELEMENTS for JUMPERS (active component to FDU) and PIGTAILS (to connector # on patch panel)		
DESCRIPTION	CODE	NUMBER OF CHARACTERS
Hub Identifier	Hub, TMC, VN or DN ID Numbers or Alphanumeric or both	2
From (Source) Device	MU: Multiplexer FD: FDU (Fiber Distribution Unit) RP: Repeater	2
From (Source) Device Identifier	Numbers or Alphanumeric or both	2
Transmitter or Receiver	T or R	1
To (Destination) Device	MU: Multiplexer FD: FDU (Fiber Distribution Unit) RP: Repeater	2
To (Destination) Device Identifier	Numbers or Alphanumeric or both	2
Connector Identifier	Connector ID	2
TOTAL		13

Labeling of the jumpers and pigtails shall conform to the following unique identification code elements:

A. Example 1: **01MU01TFD0203**

This pigtail is located in Hub 1, from multiplexer 01, transmitting to FDU 02 to patch panel position (connector) 03.

B. Example 2: **02MUAITFDOB08.**

This jumper is located in Hub 2, from multiplexer AI, transmitting to FDU B, to patch panel position (connector) 08.

Label Placement

1.Cables

All cables shall be clearly labeled with the unique identification code element-method described elsewhere in these special provisions, at all terminations, even if no connections or splices are made, and at all splice vault entrance and exit points.

2. Cable to Cable Splices

All cable jackets entering the splice closure shall be labeled in accordance with the identification method described elsewhere in these special provisions.

3. Cable to Fiber Distribution Units

The cable jackets shall be clearly labeled at entry to the FDU in accordance with the unique identification code element method described elsewhere in these special provisions. In addition, each fiber shall be labeled with the Fiber ID and pigtails shall be labeled at the connector with the Fiber ID. The FDU shall be clearly labeled with the Cable ID on the face of the FDU. If multiple cables are connected to the FDU, each block of connectors relating to each individual cable shall be clearly identified by a single label with the Cable ID. Individual connections shall be clearly marked on the face of the FDU in the designated area with the Fiber ID.

4. Fiber

Fibers labels shall be placed next to the connectors of the individual fibers.

5. Patch Panels

The cable jackets shall be clearly labeled at entry to the Patch Panel in accordance with the unique identification code element method described elsewhere in these special provisions. In addition, each fiber shall be labeled with the Fiber ID and pigtails shall be labeled at the connector with the Fiber ID. The Patch panel shall be clearly labeled with the Cable ID on the face of the Panel. If multiple cables are connected to the Patch Panel, each block of connectors relating to each individual cable shall be clearly identified by a single label with the Cable ID. Individual connections shall be clearly marked on the face of the Panel in the designated area with the Fiber ID.

6. Jumpers

Equipment to FDU jumpers shall be labeled as to the equipment type connected and shall be labeled at both ends. FDU to FDU jumpers shall be labeled at each end in accordance with the unique identification code element method described elsewhere in these special provisions.

7. Pigtails

Pigtails shall be labeled at the connector in accordance with the unique identification code element method described elsewhere in these special provisions.

8. Copper Cable Labels

All twisted-pair communications cables shall be clearly labeled in a in accordance with the unique identification code element method described elsewhere in these special provisions.

Fiber Assignment

The fiber optic assignment tables, included in the plans, are preliminary and show the protocol to be followed when placing and splicing the fiber optic cables. Revised fiber assignment tables shall be provided to the Contractor at construction. This Contractor shall notify Engineer of any discrepancies in the fiber assignments.

SPLICE CLOSURES

The FIO field splices shall be enclosed in splice closures which shall be complete with splice organizer trays, brackets, clips, cable ties, seals and sealant, as needed. The splice closure shall be suitable for a direct burial or pull box application. Manufacturer's installation instructions shall be supplied to the Engineer prior to the installation of any splice closures. Location of the splice closures shall be where a splice is required as shown on the plans, designated by the Engineer, or described in these special provisions.

The splice closure shall conform to the following specifications:

A. Non-filled thermoplastic case
B. Rodent proof, water proof, re-enterable and moisture proof
C. Expandable from 2 cables per end to 8 cables per end by using adapter plates
D. Cable entry ports shall accommodate 10 mm to 25 mm diameter cables
E. Multiple grounding straps
F. Accommodate up to 8 splice trays
G. Suitable for "butt" or "through" cable entry configurations
H. Place no stress on finished splices within the splice trays

The splice closure shall be bolted to the side wall of the splice vault.

The Contractor shall verify the quality of each splice prior to sealing the splice closure. The splice closure shall not be sealed until link testing is performed and is approved by the Engineer.

SPLICE TRAYS

Splice trays must accommodate a minimum of 12 fusion splices and must allow for a minimum bend radius of 45 mm. Individual fibers must be looped one full turn within the splice tray to allow for future splicing. No stress is to be applied on the fiber when it is located in its final position. Buffer tubes must be secured near the entrance of the splice tray to reduce the chance that an inadvertent tug on the pigtail will damage the fiber. The splice tray cover may be transparent. Splice trays in the splice closure shall conform to the following:

A. Accommodate up to 24 fusion splices
B. Place no stress on completed within the tray
C. Stackable with a snap-on hinge cover
D. Buffer tubes securable with channel straps
E. Must be able to accommodate a fusion splice with the addition of an alternative splice holder.
F. Must be labeled after splicing is completed.

Only one single splice tray may be secured by a bolt through the center of the tray in the fiber termination unit. Multiple trays must be securely held in place as per the manufacturer's recommendation.

PASSIVE CABLE ASSEMBLIES AND COMPONENTS

The F/O cable assemblies and components shall be compatible components, designed for the purpose intended, and manufactured by a company regularly engaged in the production of material for the fiber optic industry. All components or assemblies shall be best quality, noncorroding, with a design life of at least 20 years.

The cable assemblies and components manufacturer shall be IS09001 registered,

FIBER OPTIC CABLE TERMINATIONS

General

Cable Termination

Once the fiber optic cable arrives within each signal cabinet or hub, it shall be routed within conduit to a wall or shelf mounted fiber splice closure as shown on the plans or as directed by Engineer. At the FDU, the cable jacket of the FOIP or outside plant cable, shall be removed exposing the aramid yarn, filler rods, and buffer tubes. The exposed length of the buffer tubes shall be at least the length recommended by the FDU manufacturer which allows the tubes to be secured to the splice trays. Each buffer tube shall be secured to the splice tray in which it is to be spliced. The remainder of the tubes shall be removed to expose sufficient length of the fibers in order to properly install on the splice tray, as described in "Splicing," elsewhere in these special provisions.

When applicable, moisture blocking gel shall be removed from the exposed buffer tubes and fibers. The transition from the buffer tube to the bundle of jacketed fibers shall be treated by an accepted procedure for sleeve tubing, shrink tube and silicone blocking of the transition to prevent future gel leak. Manufacturer directions shall be followed to ensure that throughout the specified temperature range gel will not flow from the end of the buffer tube. The individual fibers shall be stripped and prepared for splicing.

Factory terminated pigtails shall then be spliced and placed in the splice tray.

All fibers inside a fiber optic cable entering an Fiber Distribution Unit (FDU), such as at a hub, or cabinet, shall be terminated, unless otherwise specified, and labeled. Attention is directed to "Fiber Distribution Unit" elsewhere in these special provisions.

A transition shall then be made, with flexible tubing, to isolate each fiber to protect the individual coated fibers. The final transition from bundle to individual fiber tube shall be secured with an adhesive heat shrink sleeve. Refer to Fan Out Termination, elsewhere in these special provisions.

Distribution Interconnect Package

Distribution involves connecting the fibers to locations shown on the plans. The distribution interconnect package consists of FDFs and FDUs with connector panels, couplers, splice trays, fiber optic pigtails and cable assemblies with connectors. The distribution interconnect package shall be assembled and tested by a company that is regularly engaged in the assembly of these packages. Attention is directed to "Fiber Optic Testing" elsewhere in these special provisions. All distribution components shall be products of the same manufacturers, who are regularly engaged in the production of these components, and the respective manufacturers shall have quality assurance programs.

Fiber Optic Cable Assemblies and Pigtails

1. General

Cable assemblies (jumpers and pigtails) shall be products of the same manufacturer. The cable used for cable assemblies shall be made of fiber meeting the performance requirements of these special provisions for the FIO cable being connected.

2. Pigtails

Pigtails shall be of simplex (one fiber) construction, in 900 pm tight buffer form, surrounded by aramid for strength, with a PVC jacket with manufacturer identification information, and a nominal outer jacket diameter of 3 mm. Single mode simplex cable jackets shall be yellow in color. All pigtails shall be factory terminated and tested and at least one meter in length.

3. Jumpers

Jumpers may be of simplex or duplex design. Duplex jumpers shall be of duplex round cable construction, and shall not have zipcord (siamese) construction. All jumpers shall be at least 2 meters in length, sufficient to avoid stress and allow orderly routing.
The outer jacket of duplex jumpers shall be colored according to the single mode color (yellow) specified above. The two inner simplex jackets shall be contrasting colors to provide easy visual identification for polarity.

4. Connectors

Connectors for Ethernet equipment shall be SC connectors. Connectors for new and existing fiber distribution units shall be SC connectors. Contractor shall confirm connector type for existing fiber distribution units.

Connectors shall be of the ceramic ferrule type for single mode fiber optic cable. Indoor connector body housings shall be either nickel plated zinc or glass reinforced polymer construction. Outdoor connector body housing shall be glass reinforced polymer.

The associated coupler shall be of the same material as the connector housing.

All connectors shall be preassembled Single-mode connector that meet the following:

- Ultra Physical Contact (UPC) connector attainable with automatic polisher.
- Preassembled configuration reduces installation time.
- Meets TIAIEIA-568-A standard.
- All-Ceramic, Epoxy-and-Polish,
- Pre-radiused zirconia ferrule for in-field polishing.
- Have a 126-pm diameter.
- Crimp ring captures 22.0-mm jackets.
- Bend-limiting boot.

SC fiber optic connectors shall meet the following specifications

Interconnection Compatibility	The Connectors shall be compliant with EIA/TIA and JIS specifications for SC and/or ST compatible connectors.
Insertion Loss	0.4 dB (typical)
Reflectance	≤ -40 dB between a temperature range of -40° C to 75° C
Durability	≤0.3 dB change, 200 rematings.
Tensile Strength	≤ 0.2 dB change, 10 lb.
Temperature Cycling	≤0.3 dB change, -40° C to 75° C
Nominal Fiber OD	125μm
Materials	Ferrule: Ceramic Housing: Composite

Accepted equipment shall be SC Compatible Single Mode Connector from OFS, Corning, or approved equal. Contractor shall confirm connector types for all fiber communication equipment before procurement.

Field terminations shall be limited to splicing of adjoining cable ends and/or cables to SC pigtails.

Fiber Optic Patch Cords

The fiber optic cable patch cords, assemblies and components shall be compatible components, designed for the purpose intended, and manufactured by a company regularly engaged in the production of material for the fiber optic industry. All components or assemblies shall be best quality, non-corroding, with a design life of at least twenty (20) years. All patch cords, components or assemblies of the same type shall be from the same manufacturer.

The Contractor shall furnish and install patch cords which are fiber optic cables with connectors on both ends. Patch cords are used to connect fiber optic transmission equipment to connector panel modules. The patch panel shall interface to patch cords with SC or ST connectors. All connectors shall be pre-manufactured.

Patch cords shall have 9OOJAm single-fiber single mode cable with SC or LC compatible or Engineer-approved equivalent connectors. The patch cords shall be at least six (6) feet in length and shall be pre-sized in the factory to the required lengths. The attenuation of the cable shall be between 1.0 and .75 dB. All patch cords shall be installed without exceeding the manufacturer specified bending radius.

Acceptable equipment shall be from OFS, Corning Cable System, or pre-approved equal.

7.2.2 Fiber Patch Panel/Wall Interconnect Center

Fiber Patch Panel (also called Wall Interconnect Center (WIC)) shall be furnished and installed in the traffic signal cabinets where the FO cable terminates. This section includes material and installation for fiber patch panel.

The fiber patch panel shall act as the demarcation point between the fiber optic cable via the fiber drop cable (pigtail) from the fiber splice closure and the terminal equipment via the fiber optic patch cords. The Contractor shall provide matching connectors. The approved type optical connectors on the end of each pigtail shall screw into a sleeve securely mounted to a patch panel within the fiber patch panel enclosure. The maximum optical loss across the connection shall not exceed 0.4 dB.

The FPP units shall be installed in Type 332 outdoor traffic signal controller cabinets, Type 333 outdoor traffic signal controller cabinets, and NEMA R outdoor traffic signal controller cabinets, as shown on the plans. FPP units shall be secured in each cable and may be wall mounted on side/shelf of cabinet in NEMA cabinets, and rack mounted in Type 332 and Type 333 cabinets. Contractor shall propose mounting method to Engineer for approval.

The fiber patch panel installed to support the termination of drop cables, as shown on the plans, shall accept a minimum of twentyfour (24) fiber terminations to accommodate all twentyfour strands from the drop cable. The cabinet shall have fiber optic cable entrances with cable sheath strain relief, leading to the fiber patch panel.

The make of Fiber Patch Panel shall be Corning Lanscape, or approved equal

The Contractor shall furnish and install fiber distribution unit (FDU) sized to be 19-inch rack-mounted in Type 332 cabinets and Type 333 cabinets, and sized to be shelf mounted in NEMA R cabinets, as shown on the Plans and as specified in these special provisions. Each FDU shall have the capacity to terminate and connect the required number of fibers as shown on the Plans. The section includes material and installation for fiber distribution unit.

The Contractor shall furnish and install all components to terminate the incoming fiber optic communication cables. The required terminations are shown on the Plans.

Fiber distribution units installed in Type 332 and Type 333 cabinets shall be

FDU Type	Accommodates Termination of
A	6 SMFO fibers
B	12 SMFO fibers
C	24 SMFO fibers
D	48 SMFO fibers
E	60 SMFO fibers
F	72 SMFO fibers
G	144 SMFO fibers

7.2.3 FIBER DISTRIBUTION UNIT

The new fiber distribution unit (FDU) shall include the following:

1. A patch panel to terminate the appropriate number of single mode fibers with SC type connector feed through couplers.
2. Splice trays.
3. Storage for splice trays.
4. A slide out metal drawer for the storage of spare jumpers.

The FDU shall consist of two parts: a splice shelf and a fiber patch panel.

The splice shelf shall house and protect fusion splices of fibers to optical fiber pigtails with six (6) feet of pigtail slack on each fiber. The FDU shall house and protect the required quantity of connectors and splices on each pigtail and slack for fiber optic patch cords. The fiber pigtail slack shall be neatly coiled and secured in a manner that does not allow the minimum operational bending radius of the pigtail to be exceeded.

The approved type optical connectors on the end of each pigtail shall screw into a sleeve securely mounted to a patch panel within the FDU enclosure. The maximum optical loss across the connection shall not exceed 0.4 dB.

The patch panel shall be capable of single mode terminations grouped by six (6) to eight (8) connector sub-panels. The housing shall have fiber optic cable entrances with cable sheath strain relief.

The Contractor shall provide pre-wired connectors panels, fiber pigtails, interconnection sleeves, and connector panels as required to make the indicated connections. The FDU shall have the spare capacity to hold the required number of connector panel modules and fiber capacity splice trays. The Contractor shall provide trays to house the entire number of fibers within the cable for future use.

FDUs installed in Type 332 and Type 333 cabinets shall be rack mounted. FDUs installed in NEMA cabinets shall be shelf mounted.

Contractor shall upgrade existing FDUs with additional fiber port cards, as shown on the plans. Existing FDUs may contain SC or ST connectors. Contractor shall field verify prior to procurement of FDU cards.

Prior to ordering the FDUs and associated equipment, the Contractor shall field verify the cabinet capacity and provide physical samples of the exact equipment proposed to the Engineer. The Engineer must approve the samples prior to ordering.

The make of FDU shall be Pretium or Lanscape series of FDU from Corning, OFS, or pre-approved equal.

Fan Out Termination

Fan out terminations shall be approved by the Engineer.

A fan out termination shall be required as shown on the plans designated by the Engineer or described in these special provisions.
For fiber counts of less than 6 fibers, a fan out termination may be used to terminate the incoming fiber optic cable. The connector return loss shall be no greater than -40 dB.
The fan out termination shall consist of a splice connector and the appropriate number of fiber optic pigtails which will be fusion spliced to the incoming fibers.

The pigtail shall be contained in a housing that will provide strain relief between the incoming fiber optic cable plant jacket, buffer tubes, fibers and pigtail jacket material.
Each fiber shall be spliced to a pigtail with a factory installed and polished SC connector, as specified elsewhere in these special provisions. The splices shall then be encapsulated in a weatherproof housing. Each connector shall have a weatherproof cap to protect it from the

elements. The pigtail shall be of simplex (one fiber) construction, in a 900 pm tight buffer form, surrounded by Aramid yarn for strength. The buffer shall have a PVC jacket with manufacturer identification information, and a nominal outer jacket diameter of 3 mm. Single mode simplex cable jackets shall be yellow in color. All pigtails shall be at least two meter in length.

Each pigtail shall be labeled, as specified elsewhere in these special provisions, and secured onto the cable using clear heat shrink tubing.

The fan-out kit, when installed in the existing traffic cabinets, shall be securely anchored to the side wall of the cabinet by suitable ties.

Acceptable Fan-Out Kit shall be from OFS, Corning Cable System, or pre-approved equal.

FIBER OPTIC TESTING

General

Testing shall include the tests on elements of the passive fiber optic components: (1) at the factory, (2) after delivery to the project site but prior to installation, (3) after installation but prior to connection to any other portion of the system. The Contractor shall provide all personnel, equipment, instrumentation and materials necessary to perform all testing, The Engineer shall be notified two working days prior to all field tests. The notification shall include the exact location or portion of the system to be tested.
Documentation of all test results shall be provided to the Engineer within 2 working days after the test are completed.
A minimum of 15 working days prior to arrival of the cable at the site, the Contractor shall provide detailed test procedures for all field testing for the Engineer's review and approval. The procedures shall include the tests involved and how the tests are to be conducted. Included in the test procedures shall be the model, manufacturer, configuration, calibration, certification, and alignment procedures for all proposed test equipment.

Factory Testing

Documentation of compliance with the fiber specifications as listed in the Fiber Characteristics Table shall be supplied by the original equipment manufacturer. Before shipment, but while on the shipping reel, 100 percent of all fibers shall be tested for attenuation. Copies of the results shall be (1) maintained on file by the manufacturer with a file identification number for a minimum of seven years, (2) attached to the cable reel in a waterproof pouch, and (3) submitted to the Contractor and to the Engineer.

Arrival On Site

The cable and reel shall be physically inspected on delivery and 100 percent of the fibers shall be attenuation tested to confirm that the cable meets requirements. The failure of any single fiber in the cable to comply with these special provisions is cause for rejection of the entire reel.

Cable continuity shall be verified using a visual light source, typically a 635-nm laser diode. For cables with insertion loss of less than 3 dB, the light source shall be the Corning Cable System 0S-I OOD test set, a RIFOCS 263A visual fault finder, or equivalent.

Test results shall be recorded, dated, compared and filed with the copy accompanying the shipping reel in a weather proof envelope. Attenuation deviations from the shipping records of greater than five percent shall be brought to the attention of the Engineer. The cable shall not be installed until completion of this test sequence and the Engineer provides written approval. Copies of traces and test results shall be submitted to the Engineer. If the test results are unsatisfactory, the reel of F/O cable shall be considered unacceptable and all records

corresponding to that reel of cable shall be marked accordingly. The unsatisfactory reels of cable shall be replaced with new reels of cable at the Contractor's expense. The new reels of cable shall then be tested to demonstrate acceptability. Copies of the test results shall be submitted to the Engineer.

After Cable Installation

Index matching gel shall not be allowed in connectors during testing. After the fiber optic cable has been pulled but before breakout and termination, 100 percent of all the fibers shall be tested with an OTDR for attenuation, Test results shall be recorded, dated, compared and filed with the previous copies of these tests. Copies of traces and test results shall be submitted to the Engineer, If the OTDR test results are unsatisfactory, the F/O cable segment of cable shall be unacceptable. The unsatisfactory segment of cable shall be replaced with a new segment, without additional splices, at the Contractor's expense. The new segment of cable then shall be tested to demonstrate acceptability. Copies of the test results shall be submitted to the Engineer.

The OTDR trace shall also include the following information:

- The date and time of the test
- The Cable ID number
- The fiber color or ID number
- The optical wavelength used for the test
- The refractive index setting of the OTDR
- The pulse width setting of the OTDR *The averaging interval of the test

System Cable Verification At Completion

1. OTDR Testing

Once the passive cabling system has been installed and is ready for activation, 100 percent of the fibers shall be tested with the OTDR for attenuation at wavelengths of both 1310 nm and 1550 nm. OTDR testing shall be performed in both directions (bidirectional), on all fibers, for each new segment of fiber optic cable installed. Test results shall be generated from software of the test equipment, recorded, dated, compared and filed with previous copies. A hard copy printout and a electronic copy on a 1GB industry standard USB Flash drive of traces and test results shall be submitted to the Engineer. The average of the two losses shall be calculated, and recorded in the Cable Verification Worksheet in Appendix A. The OTDR shall be capable of recording and displaying anomalies of at least 0.02 dB.AII connector losses must be displayed on the OTDR traces.

2. Power Meter and Light Source

At the conclusion of the OTDR testing, 100 percent of the fiber links shall be tested end to end with a power meter and light source, in accordance with EIA Optical Test Procedure 171 and in the same wavelengths specified for the OTDR tests. These tests shall be conducted in one direction. As shown in Appendix A, the Insertion Loss (IC) shall be calculated. Test results shall be recorded, compared, and filed with the other recordings of the same links. Test results shall be submitted to the Engineer. These values shall be recorded in the Cable Verification Worksheet in Appendix A.

3. Cable Verification Worksheet

The Cable Verification Worksheet shown in Appendix A shall be completed for all links in the fiber optic system, using the data gathered during cable verification. The completed worksheets shall be included as part of the system documentation.

4. Test Failures

If the link loss measured from the power meter and light source exceeds the calculated link loss, or the actual location of the fiber ends does not agree with the expected location of the fiber ends (as would occur with a broken fiber), the fiber optic link will not be accepted. The unsatisfactory segments of cable, or splices shall be replaced with a new segment of cable or splice at the Contractor's expense. The OTDR testing, power meter and light source testing and Cable Verification Worksheet shall be completed for the repaired link to determine acceptability. Copies of the test results shall be submitted to the Engineer. The removal and replacement of a segment of cable shall be interpreted as the removal and replacement of a single contiguous length of cable connecting two splices and two connectors. The removal of a small section containing the failure and therefore introducing new unplanned splices, will not be allowed.

Passive Component Package Testing and Documentation

All components in the passive component package (FDUs, pigtails, jumpers, couplers, and splice trays) shall be from a manufacturer who is IS09001 registered.
In developing the passive component package, each connector termination (pigtail, or jumper) shall be tested for insertion attenuation loss using an optical power meter and source. In addition, all single mode terminations shall be tested for return reflection loss. These values shall meet the loss requirements specified earlier and shall be recorded on a tag attached to the pigtail or jumper.
Once an assembly is complete, the manufacturer shall visually verify all tagging of loss values is complete. As a final quality control measure, the manufacturer shall do an "end to end" optical power meterllight source test from pigtail end to end to the terminating point assure continuity and overall attenuation loss valued. This test shall be conducted from field location to each Gigabit Ethernet hub, and between each Gigabit Ethernet hub back to the TMC hub. The final test results shall be recorded, along with previous individual component values, on a special form assigned to each FDU. The completed form shall be dated and signed by the Manufacturer's Quality Control supervisor. One copy of this form will be attached in a plastic envelope to the assembled FDU unit. Copies will be provided separately to the Contractor and to the Engineer, and shall also be maintained on file by the manufacturer or supplier. The assembled and completed FDU unit shall then be protectively packaged for shipment to the Contractor for installation.

Fiber Optic System Performance Margin Design Criteria

The installed system performance margin shall be at least 6 dB for every link. If the design system performance margin is less than 6 dB, the Engineer shall be notified and informed of the Contractor's plan to meet that requirement.

Active Component Testing

The transmit and receive ports of the Ethernet switches shall be tested with a power meter and light source, to record the transmitter average output power (dBm) and receiver sensitivity (dBm). These values shall be recorded in the Fiber System Performance Margin Calculations Worksheet in Appendix B, section C, number 6.

APPENDIX A

Cable Verification Worksheet

End-to-End Attenuation (Power Meter and Light Source) Testing
and OTDR Testing

Contract No. _____ Contractor: _____

Operator: _____ Date: _____

Link Number: Fiber Number: _____

Test Wavelength (Circle one): 1310 nm 1550 nm

Expected Location of fiber ends: End 1:_____ End 2:_____

Power Meter and Light Source Test Results:

Power In: _____dBm 1A

Output Power: _____dBm 1B

Insertion Loss [IA - 1 B1: _____dBm 1C

OTDR Test Results:

Forward Loss: _____dBm 2A

Reverse Loss: _____dBm 2B

Average Loss [(ZA + ZB)12]: _____dBm 2C

To Be Completed by City of Victorville:

Resident Engineer's Signature:_____ Date_____

Cable Link Accepted:_____

APPENDIX B
Fiber System Performance Margin Calculations Worksheet

A. Calculate the Passive Cable Attenuation

1. Calculate Fiber Loss at Operating Wavelength: _____nm	Cable Distance (times) Individual Fiber Loss (equal) @ 1310 nm (0.4 dB/km) @1550 nm (0.3 dB/km)	_____km x ____ dB.km=
	Total Fiber Loss:	_____dB

B. Calculate the Total Connector/Splice Loss

2. Calculate Connectors/couplers Loss: (exclude Tx and Rx Connectors)	Individual Connector Loss (times) Number of Connector Pairs (equal) **Total Connector Loss:**	0.4 dB x _____ = _____dB
3. Calculate Splice Loss:	Individual Splice Loss (times) Number of Splices (equal) **Total Splice Loss:**	0.1 dB x _____ = _____dB
4. Calculate Other Components Loss:	**Total Components:**	_____dB
5. Calculate Total Losses:	Total Connector Loss (plus) Total Splice Loss (plus) Total Components (equal)	+_____dB +_____dB +_____dB =
	Total Connector/Splice Loss:	_____dB

C. Calculate Active Component Link Loss Budget

System Wavelength: Fiber Type: Average Transmitter Output (Launch Power):		_____nm Single mode _____dBm
Receiver MAX Sensitivity (10^9BER) (minus) Receiver MIN Sensitivity (equal) **Receiver Dynamic Range:**		_____dBm - _____ dBm= _____dB
6. Calculate Active Component Link Loss Budget:	Average Trasmitter Output (Launch Power) (minus) Receiver MAX Sensitivity (equal)	_____dBm - _____dBm=
Active Component Link Loss Budget:		_____dB

D. Verify Performance

7. Calculate System Performance Margin to Verify Adequate Poser:	Active Component Link Loss Budget **[C]** _____dB (minus) Passive Cable Attenuation -_____dB **[A]** (minus) Total Connector/Splice Lost **[B]** (equal) -_____dB =
System Performance Margin:	_____dB

APPENDIX C

Optical Modem Test

Worksheet

Contract No. _____ Contractor: _____

Operator: _____ Date: _____

Location: _____

DS-1 Optical Modem, Modem No. :

Optical Receiver Power (max) into modem (10' BER) _____dB 3A

Optical Receiver Level (minimum) into modem _____dB 3B

Receiver Dynamic Range (3A-3B): _____dB 3C

DS-1 Optical Modem, Modem No. :

Optical Receiver Power (max) into modem (l09 BER) _____dB 4A

Optical Receiver Level (minimum) into modem _____dB 4B

Receiver Dynamic Range (4A-4B): _____dB 4C

DS-1 Optical Modem, Modem No. :

Optical Receiver Power (max) into modem (l09 BER) _____dB 5A

Optical Receiver Level (minimum) into modem _____dB 5B

Receiver Dynamic Range (5A-5B): _____dB 5C

DS-I Optical Modem, Modem No. :

Optical Receiver Power (max) into modem (l09 BER) _____dB 6A

Optical Receiver Level (minimum) into modem _____dB 6B

Receiver Dynamic Range (6A-6B): _____dB 6C

Fiber Optic Cable Route Records

The Contractor shall provide the City with a cable route diagram indicating the actual cable route and foot marks, for all intersections, directional change points in the cable routing, and all termination points. The Contractor shall record these points during cable installation. Cable system As-Built drawings showing the exact cable route shall be provided by the Contractor to the City. Information such as the location of slack cable and its quantity shall also be recorded in the cable route diagram. This information shall be included as part of the Operations & Maintenance Manual. Each fiber connectors and patch panel connectors shall be tagged with its fiber number and associated field element location. Each tag shall be permanently attached by a nylon tie-lock to the cable or connectors.

7.3 Ethernet Communication over copper wire.

7.3.1 A System based upon Ethernet Access Devices (EAD) and Copper Add-Drop Multiplexer (CADM) shall be furnished and installed in the cabinet and at locations shown on the plans. Equipment shall be Actelis ML130/ML628/ML688 with all related power supplies, communication isolators, and hardware necessary for the installation. <u>All diagnostic features shall be enabled</u>. Installation shall be in accordance with the manufacturer's requirements.

7.3.2 Interfaces

7.3.2.1 Ethernet

10/100 Base-T	4 ports	– Connector: RJ45, Auto-MDIX
100 Base-FX/1000	1 port (option)	- Connector SFP based, MSA compliant

7.3.2.2 High Speed Link (Bonded Copper Pairs)

Protocol	IEEE 802.3ah 2Base-TL
Sealing Current	48VDC/4mA nominal

7.3.2.3 Management (Out-of-Band)

10/100BaseT	- connector: RJ45, Auto-MDIX

7.3.3 LAN Protocols

Dynamic Bridging	IEEE 802.1
VLAN Tagging	IEEE 802.1Q
Double Tagging	Q-in-Q
MSTP, RSTP, STP	IEEE 802.1d
OAM/CFM	IEEE 802.3ah, 802.1ag

7.3.4 Management Protocols

SNMP	SNMP v1 and v2c
Command Line Interface	TL1
Remote Access	Telnet
Secure Access	SSH v2
Time Synchronization	SNTP v3
Web Access	HTTP
File Transfer	FTP, TFTP

7.3.5 Software applications

Any software required to setup, maintain, modify or monitor the equipment shall be provided prior to installation.

7.3.6 Environmental

Operating Temp	-40° to +65°
Storage Temp	-40° to +70°
Relative Humidity	Up to 95%, non-cond.

7.4 Hardened Ethernet Switch

7.4.1 A Hardened Ethernet switch shall be furnished and installed with the cabinet. The Equipment shall be:
Cisco IE3000-8TC Switch, 8 10/100 + 2 T/SFP
Cisco IEM-3000-4SM 4port SFP expansion module
Cisco PWR-IE50W-AC AC Power Module
Cisco 100Mbps Single Mode Rugged SFP- 6 each

It shall incude all related power supplies, communication isolators, and hardware necessary for the installation. Or Pre-approved equal. All diagnostic features shall be enabled and shall include Lan Base web development manager. Installation shall be in accordance with the manufacturer's requirements

7.4.2 Shall be NEMA TS-2 compliant

7.4.3 Shall be NEMA TS-2 & NTCIP Compliant for managed ITS data applications

7.4.4 Shall provide an embedded web server for setup and configuration.

7.4.5 Unit shall be compatible with Naztec Traffic signal controllers

7.4.6 Functional Hardware Features

Feature	Specifications
Configuration	Twelve 10/100 ports with two fixed 100BASE-FX multimode uplink ports or two fixed 100BASE-LX single-mode uplink ports
Operating Temperature	-40º to 60º C / -40º to 140º F
Relative Humidity	5%-95% non-condensing
Cooling	Passive (no fans)
Shock/Vibration	50 g 500 Hz Trapezoidal/MIL-STD-810
Dimensions (inches) hxdxw	3.75x5x8
Cabling	Front and Downward
Alarm Relays	2 normally closed
LED	Relay, Power (for each source), Port Status (similar to 2950)
Mounting Options	Din Rail (ports front or downwards) Rack Mounting Adapters
Power Transformer	Separate SKU Din Rail (110/220 AC)
Power	24 V DC (Optional Redundant Power)
Power Surge Protection	30%
Warranty	5 – year Limited Lifetime
Ports	8- 10/100 + 2- T/SFP (for single Mode Fiber)

7.4.6 Software and Performance Features

High Availability	IGMP Snooping Support 4,000 VLANS Broadcast Storm Control Rapid Spanning Tree Support
Quality of Service	4 service queues Weighted Round Robin Queuing Strict Priority Scheduling
Security	Security Access Control Lists (Layers 2-4) SNMP v3 Support
Performance Specifications	13.6 Gbps switching fabric Forwarding Rate up to 4.8Mpps Configurable up to 8,000 MAC addresses
Standards Supported	IEEE 802.1x Security Supporrt IEEE 802.1w Rapid Spanning Tree Protocol (RSTP) IEEE 802.1s Multiple Spanning Tree Protocol (MSTP) IEEE 802.3x full duplex on 10BASE-T, 100BASE-TX, and 1000BASE-T ports IEEE 802.1D Spanning-Tree Protocol IEEE 802.1p CoS prioritization IEEE 802.1Q VLAN IEEE 802.3 10BASE-T specification IEEE 802.3u 100BASE-TX specification IEEE 802.3ab 1000BASE-T specification IEEE 802.3ad Link Aggregation Control Protocol (LACP) IEEE 802.3ah Ethernet in the First Mile (EFM) RMON I and II standards SNMPv1, SNMPv2c, and SNMPv3
Compliance	CE Marking UL 60950 CSA 22.2/60950 TUV GS: CB Report to IEC 60950 UL 508 CSA 22.2/142 AS/NZS 3260 NOM UL 1604—Class I, Div 2 Group A, B, C, D CSA 22.2/213—Class 1, Div 2 Group A, B, C, D EN 50021—Class I, Zone 2 FCC Part 15 Class A ICES-003 Class A EN 55022: (CISPR22 Class A) EN 55024: (CISPR24) VCCI Class A AS/NZS CISPR 22 Class A VCCI Class 1 CNS 13438 BSMI Class A MIC Class A EN 61131-2 EN 55011 (CISPR 11) Class A

7.5 Traffic Signal Controller Data Transmission Modem

7.5.1 The External Traffic Signal Controller Data Transmission Modem shall be designed to operate as an FSK modem over existing interconnect cable that is not twisted or shielded. This unique feature includes the capability of rejecting the 60 Hz voltage that might be induced when operating on an active interconnect line.

7.5.2

Data Rate:	300 to 9600 Baud
Frequencies:	Mark-10,000 KHz Space-15,000 KHz
Timing:	CTS 10 +/-2ms CD 8 +/-2ms
Soft Carrier:	10 +/-2ms
Transmit Level:	10 dbm or less
Data Interface:	EIA RS-232Temperature:-
Temperature:	-40º C to +85º
Power:	120V AC +/-15%, typical 50 ma or less
LED Indicators:	TX, RX, RTS, CTS, CD

7.5.3 The Traffic Signal Controller Data Transmission Modem shall be Naztec model 9600A or Pre-approved equal.

8. UNINTERRUPTIBLE POWER SYSTEM

8.1 General Requirements

The Traffic UPS shall be a turnkey, true on-line, power conditioner and battery backup or uninterruptible power system (UPS) designed for transportation and traffic applications. The unit shall be capable of operating, up to its rated power level, in extreme environments with existing equipment on the street today including any and all signal heads (i.e., Incandescent, LED, Neon, etc.). The Traffic UPS shall be furnished and installed in conformance with the following specification.

8.2 Operation

8.2.1 The Traffic UPS shall be capable of producing standby and continuous AC outputs.

8.2.2 Suggested operating mode for respective outputs during power failure: Continuous output provided for signal controllers and modems; Standby output provided for signals in flash mode operation (optional delay timer available for short-term battery run under full cycling operation).

8.2.3 Up to the maximum rating, the Traffic UPS shall be capable of running any combination of signal heads, whether Incandescent, LED or Neon, by any manufacturer, regardless of power factor, without overdriving the poorer power factor LED heads which may cause early degradation, low luminosity or early signal failure.

8.2.4 Upon Loss of utility power the Traffic UPS shall insert battery power into the system via a supplied Power Interface Module (PIM). In case of UPS failure and/or battery depletion, the PIM will ensure that the UPS will drop out and, upon return of utility power, the traffic control system will default to normal operating mode.

8.2.5 The Power Interface Module shall enable removal and replacement of the Traffic UPS without shutting down the traffic control system (i.e. “hot swap” capability). Connectors shall be equipped with a “safety interlock” feature.

8.2.6 For 170 or “California” style cabinets, upon loss of power the Traffic UPS shall actuate the existing Flash Transfer Relays (FTRs) and Mercury Contactor (MC) to force the traffic control system in to Flash Mode operation.

8.2.7 Existing Flasher Modules and Flash Transfer Relays shall be utilized.

8.2.8 To facilitate emergency crews and police activities, the Traffic UPS shall be compatible with police panel functions (i.e. “Signals OFF” switch must kill power to the field wiring even when on UPS/Battery power).

8.2.9 The Traffic UPS shall not duplicate or take over flash operation or flash transfer relay functions.

8.2.10 The Traffic UPS shall be capable of providing continuous, (AC) power to selected devices such as signal controllers, modems, communications hubs, NTCIP adapters and video equipment.

8.3 Description

The Traffic UPS shall consist of three major components, the Electronics Module, the Power Interface Module, and the Battery System.

8.3.1 The <u>Electronics Module</u> shall consist of the following:

8.3.1.1 True sine wave, high frequency inverter utilizing IGBT technology.

8.3.1.2 3-stage, temperature compensated, battery charger.

8.3.1.3 For connection from the Electronics Module to the Power Interface Module and Battery System, dedicated harnesses shall be provided with quick-release, connectors and braided nylon sleeving over all conductors.

8.3.1.4 Local and remote control of UPS functions.

8.3.1.5 Local and remote communications capabilities and be capable of NTCIP and TCP/IP communications and a Spread Spectrum Radio modem.

8.3.1.6 Separate Power Interface Module (PIM) for inserting power safely and reliably.

8.4Mounting/Configuration

8.4.1 NEMA Style: mounting method shall be shelf-mount or wall mount.

8.4.2 External: A separate, stand-alone, pad-mounted, outdoor (NEMA 3R) enclosure shall be available should there be inadequate room in the signal cabinet or should the consulting/traffic engineer prefer independent, external mounting.

8.5 Battery System

8.5.1 The battery shall be comprised of extreme temperature deep cycle, AGM/VRLA (Absorbed Glass Mat/Valve Regulated Lead Acid) batteries.

8.5.2 The battery system shall consist of one or more strings (typically 4 or 6 batteries per string) of extreme temperature, deep cycle, AGM/CRLA (Absorbed Glass Mat/Valve Regulated Lead Acid) batteries such as Clary Outpost™ batteries or equivalent.

8.5.3 Batteries shall be certified to operate at extreme temperatures from -40°C to +74°C.

8.5.4 The batteries shall be provided with appropriate interconnect wiring and a corrosion-resistant mounting trays and/or brackets appropriate for the cabinet into which they will be installed.

8.5.5 The interconnect cable shall be protected with abrasion-resistant nylon sheathing.

8.5.6 The interconnect cable shall connect to the base module via a quick-release connector.

8.5.7 Battery construction shall include heavy-duty, inter-cell connections for low-impedance between cells, and heavy duty plates to withstand shock and vibration.

8.5.8 An optional lifting handle shall be available on most battery models.

8.6 Electrical Specifications

8.6.1 Input Specification

Nominal Input Voltage	120 VAC, Single Phase
Input Voltage Range	85 VAC to 140 VAC
Input Frequency	50 or 60 Hz (+/-5%)
Input Configuration	3 Wire (Hot, Neutral & Ground)
Input Current (Max. draw)	7.2 amps, Power-Factor Corrected
Input Protection	Input Fuse (12 amps)

8.6.2 Output Specification

Nominal Output Voltage	120 VAC, Single Phase
Power Rating	1kVA (1000VA/700W)
Output Voltage Regulation	+/-2% for 100% step load change and from High battery to Low battery condition
Output Frequency	50 or 60 Hz (+/-5%)
Output Configuration	Keyed, circular connectors and duplex receptacle.
Output Wave Form	True Sinewave
Overload Capability	110% for 10 minutes 200% for ½ second
Fault clearing	Current limit and automatic shutdown
Short circuit protection	Current limit and automatic shutdown
Efficiency	85% at full load
Load Power Factor	.7 lagging through unity to .7 leading

8.7 Physical Specifications

8.7.1 Dimensions:

Rack-mount: Width = 19", Depth = 12", Height = 7" (4U)

Shelf-mount: Width = 19", Depth = 12", Height = 3.5"

Wall-mount/Unistrut Rail mount: Width = 6.9", Depth = 9.5", Height 16"

Separate Power-Interface Module = Width = 6", Depth = 2.8", Height 9"

8.7.2 Weight: UPS: 20 lbs., Shipping weight: 25 lbs.

8.8 Environmental Specifications

8.8.1 The UPS shall meet or exceed NEMA temperature standards from -40°C to +74°C.

8.8.2 The UPS shall be certified and field proven to meet or exceed NEMA temperature standards. A Certification of compliance shall be made available upon request.

8.9 Battery Specifications

8.9.1 The battery system shall be certified and filed proven to meet or exceed NEMA temperature standards from -40°C to +74°C.

8.10 Communications, Controls & Diagnostics

8.10.1 Alarm Function Monitoring: The traffic UPS shall come standard with a DB-9F connector with open collectors (40V @ 20 mA) indicating;

8.10.2 Loss of Utility Power

8.10.3 Inverter Failure.

8.10.4 Low Battery.

8.10.5 An RS232 Interface shall be provided via a DB-9F connector allowing full, interactive, remote computer monitoring and control of the UPS functions.

8.10.6 A RJ45 port shall be supplied to connect to ethernet network

8.10.7 Front Panel controls: Power ON, Cold (DC) Start, Alarm Silence, Battery Test, Bypass Breaker, and DC/Battery Breaker.

8.10.8 Unit shall be provided with the optional SNMP/HTTP card that functions as an SNMP agent and includes an embedded HTTP server (web server) allowing the capability of monitoring and controlling the UPS system from a remote location utilizing a standard web browser.

8.10.9 All Software required to interface with the UPS system whether it is used for setup or upgrading firmware shall be provided prior to each signal turn-on. Media shall be either Compact disc or provided on "flash drive" USB memory device.

8.10.10 Central software for remote programming and configuration shall be provided at no additional cost.

8.10.11 Unit shall be equipped with a display screen and keypad on the front of the unit that can be programmed without the use of a laptop.

8.11 Reliability

8.11.1 Calculated MTBF is 100,000 hours based on component ratings.

8.11.2 When Bypass and Power Interface Module are included, system MTBF increases to 150,000 hours.

8.12 Options

8.12.1 Battery Tray to hold six (6) OP72A batteries, up to four (4) OP72B or OP72C batteries, and up to three (3) OP72D batteries. Tray is 19" wide for use in 170 type cabinets and mounts on standard RETMA rails.

8.12.2 Swing-out Battery Box, mounts on right rail inside back door of 170 type cabinets. Box is designed to hold six (6) OP72A batteries, up to four (4) OP72B or OP72C batteries, and up to three (3) OP72D batteries.

8.12.3 Adjustable Delay-timer to provide up to 10 hours of full cycling while on battery before switching to flash mode (only available where 100% low-power/LED signals and ped heads are used). Batteries must be sized properly to fully utilize this feature.

8.12.4 Service pedestal-mounting option.

8.12.5 One-shot ground pulse to trigger External Start upon return of AC power.

8.12.6 Dial-out modem for wireless or land line communication.

8.12.7 Enhanced battery charger provides accelerated charging capacity (contact factory for details and proper application).

8.13. TRAFFIC SIGNAL BATTERY BACK UP CABINET

8.13.1 The cabinet shall be fabricated from sheet aluminum, minimum thickness of 0.125 inches, type 5052-H32.

8.13.2 The dimensions shall be a minimum 32"H x 22 ½"W x 26"D,

8.13.3 All interior seams shall be continuously welded.

8.13.4 No vertical seams shall be allowed, except for the corners. The cabinet side walls and back shall be fabricated of one continuous piece of sheet aluminum.

8.13.5 The roof shall be fabricated of one continuous piece of sheet aluminum and shall incorporate a plenum to which the fans will be mounted from the inside of the cabinet to provide forced air ventilation. Continuous corner welds shall be allowed. The ventilation exhaust opening of the unit shall be underneath the front overhang and shall have a screen. The roof section shall be welded to the main cabinet body.

8.13.6 The cabinet interior and exterior shall have a factory applied corrosion resistant prime coat and baked enamel finish coat or brushed aluminum finish.

8.13.7 The cabinet shall be base mounted and have 4 mounting holes on the bottom of the unit. The mounting holes will be at 40-3/4" center to center in width, and 18-1/2" center to center in depth.

8.13.8 The main door of the cabinet shall be supported by stainless steel hinges.

8.13.9 The main door shall be equipped with a three point latching mechanism, fabricated from heavy gauge steel with steel locking rods and twin nylon rollers. This mechanism is to be cadmium plated. The stops shall sustain function under 80 M.P.H. wind loading.

8.13.10 Door handle shall be made of 3/4" cold rolled round stock stainless steel and have a provision for padlocking.

8.13.11 **Three** shelves shall be included, and shall be of sufficient depth to store equipment and batteries.

8.13.12 Shelves shall be at least 10 ½ inches deep and be located in the cabinet to provide a ½ inch clearance between the back of the shelf and the back of the cabinet

8.13.13 All mounting hardware used in the cabinet, whether it is used to secure equipment or some portion of the cabinet itself shall be stainless steel or nickel plated brass.

8.13.14 The cabinet shall be supplied with a standard #2 lock for the main door and a standard police lock for the police door; two keys for each type lock are to be included.

.

8.13.15 Rack mounts shall provide for the mounting of standard EIA 19" rack cage.

8.13.16 Holes shall be tapped for 10-32 threads with a a minimum .125" Material

8.13.17 Hardware

- All hardware in this cabinet, whether it be for mounting or for termination shall be stainless steel or nickel plated brass.
- All sheet metal products incorporated in this cabinet are to be aluminum, and shall be a minimum thickness of .090 inches, and are to be finished to prevent oxidation.
- All termination points and assemblies are to be clearly marked and identified and shall correspond to the cabinet wiring print.

8.13.18.Wire Assemblies

- 8.12.5.1 All wire assemblies connecting one panel to another, and all harness shall be encased in a braided nylon sleeve. Cables are exempt from this requirement. Spiral wrap shall not be permitted.

8.13.19 Fan and Thermostat Assembly

- The fan and thermostat assemblies shall be located on the top inside of the cabinet, and shall be attached to the plenum.
- The fans shall be rated at 100 CFM minimum and shall have ball bearings. Sleeve bearings are expressly forbidden.
- The fans shall have screened covers.
- The thermostats shall be 120 VAC and have a temperature rating of 70 to 120 degrees Fahrenheit.
- An RC network shall be provided across the positive and negative inputs to the fans.
- Two complete fan assemblies shall be furnished in each cabinet. Each fan shall be controlled by a separate thermostat.

8.13.20 Cabinet Lights

- The cabinet lamp and fixture shall be a LED, and shall be UL approved.
- The lamp shall have a 15 watt output.
- The light shall be mounted on the underside of the roof plenum towards the front, and shall be controlled by a door switch which is activated when the main cabinet door is opened.

8.14 Serviceability & Maintainability

8.14.1 MITR (Mean-Time to Replace or Repair)

8.14.2 Electronics: 15 minutes or less

8.14.3 Battery System: 15 minutes or less

8.15 Warranty

Standard warranty terms cover entire Traffic UPS including battery. Terms are one-year parts and labor with labor F.OB factory. Hot Swap programs shall be provided.

8.16 Determination of Suitability

8.16.1 Any manufacturer of traffic signal control equipment or controller cabinets to be supplied under these Special Provisions shall provide a field and factory demonstration of the equipment proposed to be supplied. The demonstration shall be of equipment that has operated satisfactorily in accordance with specifications for a minimum of 180 calendar days subsequent to final acceptance by the jurisdiction to which it was supplied. This equipment shall have been performing those functions proposed under this contract. The demonstration shall be to **two members of the City of Victorville Engineering Department designated by the City Traffic Engineer.** The two-person review team will determine the suitability of the equipment and their report shall be the final authority for determination of suitability of the proposed equipment. All expenses incurred in providing these demonstrations shall be the responsibility of the manufacturer of the proposed equipment.

8.16.2 Any departure from the equipment listed under Sec. 8.15.3 of these Special Provisions shall require Determination of Suitability in accordance with Sec. 8.15.1 of these Special Provisions prior to award of contract. Failure to achieve a Determination of Suitability for the proposed alternate equipment shall be considered cause for rejection of the project bid as non-responsive.

8.16.3 An acceptable system is the SP1250LX series Traffic UPS manufactured by Clary Corporation or Pre approved Equal.

8.17 Turn On

There shall be a factory trained individual representing the manufacturer present at signal turn on.

9. PEDESTRIAN REQUIREMENTS

9.1 NOT USED

9.2 LED PEDESTRIAN COUNTDOWN MODULES

9.2.1 PURPOSE

The purpose of this specification is to provide the minimum performance requirements for the LED "walking person" and "hand" icon pedestrian signal modules with countdown (hereafter called module or modules). This specification is only for the nominal overall message-bearing surface of 406 x 457 mm (16 x 18 in). This specification is not intended to impose restrictions upon specific designs and materials that conform to the purpose and the intent of this specification. This specification refers to definitions and practices described in "Pedestrian Traffic Control Signal Indications" published in the *Equipment and Materials Standards of the Institute of Transportation Engineers*, (referred to in this document as "PTCSI") and in the Applicable Sections of Manual on Uniform Traffic Control Devices (MUTCD) 2003 Section 4E. This purchasing specification applies to modules purchased after the effective date of these specifications.

9.2.2 Physical and Mechanical Requirements

9.2.2.1 General

Modules designed as retrofit replacements for existing pedestrian signal indication lamps shall not require special tools for installation. Retrofit replacement modules shall fit into existing pedestrian signal housings built for the PTCSI sizes stated in Section 1 of the "walking person" and "hand" icon pedestrian signal indication Standard without modification to the housing.

Installation of a retrofit replacement module into an existing pedestrian signal housing shall only require the removal of the existing optical unit components, i.e., lens, lamp module, gaskets, and reflector; shall be weather tight and fit securely in the housing; and shall connect directly to existing electrical wiring.

9.2.2.2 The Module under physical and mechanical requirements

9.2.2.2.1 The retrofit module shall be capable of replacing the optical component of the pedestrian indication.

9.2.2.2.2 The LED module shall have a visual appearance similar to that of an incandescent lamp (ie: Smooth and non-pixilated).

9.2.2.2.3 The module lens shall not be a replaceable part. Screwed on lenses are not allowed. Only modules with internal mask shall be utilized. No external silk-screen shall be permitted.

9.2.2.2.4 The dividers inside the module that make up the icons and digits shall be black so as to eliminate sun phantom effect. When not illuminated with the sun shining into the module, the WALKING PERSON and UPRAISED HAND and COUNTDOWN DIGITS shall not be readily visible.

9.2.2.2.5 The countdown digits of the pedestrian signal module shall be located adjacent to the associated UPRAISED HAND (symbolizing DON'T WALK). When displaying a number "1" for both digits, the number "1" shall use the two segments furthest to the right. The digits shall remain on during the entire count down cycle. Flashing digits are not allowed.

9.2.2.2.6 The display of the number of remaining seconds shall begin only at the beginning of the pedestrian change interval. After the countdown displays zero, the display shall remain dark until the beginning of the next countdown.

9.2.2.2.7 The walking person, hand icons and countdown digits (16"x18" size only) shall be incandescent looking. The configurations of the walking person icon, hand icon and numbers icons are illustrated in Figures 1, 2 (per PTCSI Part 2 Specification) and Figure 3 respectively.

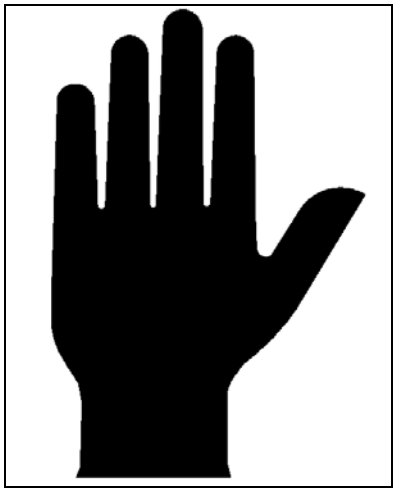

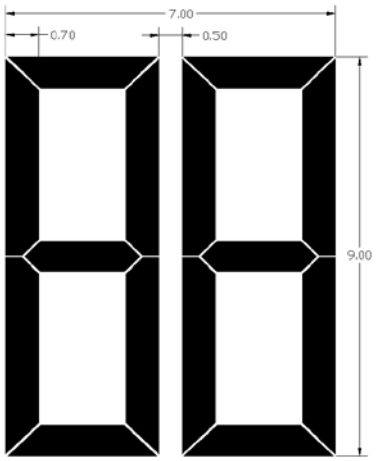

Figure 1 Figure 2 Figure 3

Dimensions for Figures 1, 2 and 3

For each nominal message bearing surface (module) size, use the corresponding minimum H (height) and W (width) measurements:

Module Size	**Icon Height**	**Icon Width**	**Countdown Height**	**Countdown Width**	**Countdown Segment Width**
406 x 457 mm (16 x 18 in)	297 mm 11 in	178 mm 7 in	229 mm 9 in	178 mm 7 in	17.78 mm 0.7 in

Note: The units shall not have any external attachments, dip switches, toggle switches or options that will allow the mode to be changed from counting the clearance cycle, to the full walk/don't walk cycle or any other modification to the icons or digits.

9.2.3 **Environmental Requirements**

9.2.3.2 All exposed components of a module shall be suitable for prolonged exposure to the environment, without appreciable degradation that would interfere with function or appearance. As a minimum, selected materials shall be rated for service for a period of a minimum of 60 months in a south-facing Arizona Desert installation.

9.2.3.3 The module shall be rated for use in the ambient operating temperature range, measured at the exposed rear of the module, of -40°C to +74°C. (-40°F to +165°F)

9.2.3.3 A module shall be protected against dust and moisture intrusion, including rain and blowing rain. Shall be sealed and meet MIL-STD-810F Procedure I, Rain & Blowing Rain specifications.

9.2.3.4 The module lens shall not crack, craze or yellow due to solar UV irradiation typical for a south-facing California Desert installation after a minimum of 60 months in service.

9.2.4 **Construction**

9.2.4.1 To prevent water seepage between the back cover and the electrical wires, or between the copper and insulation of the wires, the electrical wires shall not penetrate the LED module housing. Connection shall be made by use of an overmolded connector.

9.2.4.2 The module shall be a single, self-contained device, not requiring on-site assembly for installation into an existing pedestrian signal housing. The power supply shall be designed to fit and mount inside the pedestrian signal module.

9.2.4.3 The assembly and manufacturing process for the module shall be designed to assure all internal LED and electronic components are adequately supported to withstand mechanical shock and vibration from high winds and other sources.

9.2.5 Materials

9.2.5.1 Materials used for the lens and LED module construction shall conform to ASTM specifications where applicable.

9.2.5.2 Enclosures containing the power supply and electronic components of the LED module shall be made of UL94 flame retardant materials. The lens of the LED module is excluded from this requirement.

9.2.5.3 The front window shall be a transparent polycarbonate material with internal masking to prevent the icons and digits from being visible when not in operation. External masking or silk-screen technology shall not be permitted. When not illuminated, the Walking Person, Hand and Countdown Digits shall not be readily visible.

9.2.6 Module Identification

9.2.6.1 Each module shall be identified on the backside with the manufacturer's name, model, serial number and operating characteristics of each symbol. The operating characteristics identified shall include the nominal operating voltage and stabilized power consumption, in watts and Volt-Amperes.

9.2.6.2 Modules conforming to this specification (WALKING PERSON, UPRAISED HAND only), may have the following statement on an attached label: "Manufactured in Conformance with the ITE Pedestrian Traffic Control Signal Indications - Part 2: Light Emitting Diode (LED) Pedestrian Signal Modules".

9.2.3.0 PHOTOMETRIC REQUIREMENTS

9.2.3.1 Luminance, Uniformity & Distribution

9.2.3.1.1 For a minimum period of 60 months, the maintained minimum luminance values for the modules under the operating conditions defined in Sections 2.3.1 and 4.2.1, when measured normal to the plane of the icon surface, shall not be less than:

- Walking person: 2,200 cd/m^2;
- Hand: 1,400 cd/m^2.
- Countdown digits: 1,400 cd/m^2;

The luminance of the emitting surface, measured at angles from the normal of the surface, may decrease linearly to a value of 50% of the values listed above at an angle of 15 degrees.

The light output requirements in this specification apply to pedestrian signal heads without any visors, hooded or louvered (egg-crate).

9.2.3.1.2 The LED module shall have a visual appearance similar to that of an incandescent lamp (ie: Smooth and non-pixilated).

9.2.3.1.3 Maximum permissible luminance: When operated within the temperature range specified in Section 2.3.2, the actual luminance for a module shall not exceed three times the required peak value of the minimum maintained luminance.

9.2.3.1.4 Luminance uniformity: The uniformity of the signal output across the emitting section of the module lens (i.e. the hand, person or countdown icon) shall not exceed a ratio of 5 to 1 between the maximum and minimum luminance values (cd/m^2).

9.2.3.2 Chromaticity

9.2.3.2.1 The standard colors for the LED Pedestrian Signal Module shall be White for the walking person and Portland Orange for the hand icon and the countdown digits. The colors for these icons shall conform to the following color regions, based on the 1931 CIE chromaticity diagram:

Walking Person —White:
Blue boundary: $x = 0.280$.
1st Green boundary: $0.280 \le x < 0.400$
$y = 0.7917 \cdot x + 0.0983$.
2nd Green boundary: $0.400 \le x < 0.450$
$y = 0.4600 \cdot x + 0.2310$.

Yellow boundary: $x = 0.450$
1st Purple boundary: $0.450 \le x < 0.400$
$y = 0.4600 \cdot x + 0.1810$.
2nd Purple boundary: $0.400 \le x < 0.280$
$y = 0.7917 \cdot x + 0.0483$.

White		
Point	x	y
1	0.280	0.320
2	0.400	0.415
3	0.450	0.438
4	0.450	0.388
5	0.400	0.365
6	0.280	0.270

Hand and Countdown Digits—Portland Orange:
Yellow boundary: $y = 0.390$
White boundary: $0.600 \le x \le 0.659$
$y = 0.990 - x$
Red boundary: $y = 0.331$.

Portland Orange		
Point	X	Y
1	0.609	0.390
2	0.600	0.390
3	0.659	0.331
4	0.669	0.331

9.2.3.2.2 Color Uniformity:

Walking Person—White: $\sqrt{(\Delta x^2) + (\Delta y^2)} \le 0.04$

where Δx and Δy are the differences in the chromaticity coordinates of the measured colors to the coordinates of the average color, using the CIE 1931 Chromaticity Diagram and a 2 degree Standard Observer.

Hand and Countdown Digits—Portland Orange:
The dominant wavelength for any individual color measurement of a portion of the emitting surface of a module shall be within ±3nm of the dominant wavelength for the average color measurement of the emitting surface as a whole.

9.2.4.0 ELECTRICAL

9.2.4.1 General

All wiring and terminal blocks shall meet the requirements of Section 13.02 of the VTCSH Standard. Maximum of three secured, color coded, 1 meter (39 in) long 600 V, 16 AWG minimum, jacketed wires, conforming to the National Electrical Code, rated for service at +105°C, are to be provided for electrical connection. The conductors shall be color coded with orange for the hand, blue for the walking person and white as the common lead.

9.2.4.2 Voltage

9.2.4.2.1 LED modules shall operate from a 60 ± 3 Hertz ac line power over a voltage range from 80 to 135 VAC RMS.

9.2.4.2.2 Nominal operating voltage for all measurements shall be 120 ± 3 VAC RMS.

9.2.4.2.3 Fluctuations in line voltage over the range of 80 to 135 VAC RMS shall not affect luminous intensity by more than ± 10 %.

9.2.4.2.4 Catastrophic failure of one LED light source in Man & Hand icons shall not result in the loss of more than the light from that one LED.

9.2.4.2.5 To prevent the appearance of flicker, the module circuitry shall drive the LEDs at frequencies greater than 100 Hz when modulated, or at DC, over the voltage range specified in Section 4.2.1.

9.2.4.2.6 Low Voltage Turn Off: There should be no illumination of the module when the applied voltage is less than 35 VAC RMS. To test for this condition, each icon must first be fully illuminated at the nominal operating voltage. The applied voltage shall then be reduced to the point where there is no illumination. This point must be greater than 35 VAC RMS.

9.2.4.2.7 Turn-ON and Turn-OFF Time: A module shall reach 90% of full illumination (turn-ON) within 75 msec of the application of the nominal operating voltage. The signal shall cease emitting visible illumination (turn-OFF) within 75 msec of the removal of the nominal operating voltage.

9.2.4.2.8 Default Condition: For abnormal conditions when nominal voltage is applied to the unit across the two-phase wires (rather than being applied to the phase wire and the neutral wire) the pedestrian signal unit shall default to the hand symbol.

9.2.4.2.9 Icon Power Supplies: LED pedestrian countdown modules shall have two separate power supplies for powering the Walking Person and Upraised Hand icons. The circuitry shall be unrelated to power the LED Walking Person icon and the LED Upraised Hand icon, in order to virtually eliminate the risk of displaying the wrong icon

9.2.4.3 Transient Voltage Protection

The on-board circuitry of a module shall include voltage surge protection:

- To withstand high-repetition noise transients and low-repetition high-energy transients as specified in NEMA Standard TS-2 2003; Section 2.1.8
- Section 8.2 IEC 1000-4-5 & Section 6.1.2 ANSI/IEEE C62.41.2-2002, 3kV, 2 ohm

- Section 8.0 IEC 1000-4-12 & Section 6.1.1 ANSI/IEEE C62.41.2-2002, 6kV, 30 ohm

9.2.4.4 Electronic Noise

The LED signal and associated on-board circuitry shall meet the requirements of the Federal Communications Commission (FCC) Title 47, Subpart B, Section 15 regulations concerning the emission of electronic noise by Class A digital devices.

9.2.4.5 Power Factor (PF) and AC Harmonics

9.2.4.5.1 The modules shall provide a power factor of 0.90 or greater when operated at nominal operating voltage, and 25ºC (77ºF).

9.2.4.5.2 Total harmonic distortion induced into an AC power line by the module, operated at nominal operating voltage, and at 25ºC (77ºF) shall not exceed 20%.

9.2.4.6 Controller assembly Compatibility

9.2.4.6.1 The current draw shall be sufficient to ensure compatibility and proper triggering and operation of load current switches and conflict monitors in signal controller units.

9.2.4.6.2 Off State Voltage Decay: When the module is switched from the On state to the Off state the terminal voltage shall decay to a value less than 10 VAC RMS in less than 100 milliseconds when driven by a maximum allowed load switch leakage current of 10 milliamps peak (7.1 milliamps AC)

9.2.4.7 Constant Current Drive

The countdown digits shall be driven by constant current to improve LED efficiency and lifespan.

9.2.4.8 Power Consumption

Maximum power consumption requirements for the modules are as follows:

	25°C
"Hand"	11.0 Watts
“Walking Person”	8.0 Watts
"Count-Down Display"	6.0 Watts (when display shows “88”)

9.2.5 MODULE FUNCTIONS

9.2.5.1 Cycle

The module shall operate in one mode: *Clearance Cycle Countdown Mode Only.* The module shall start counting when the flashing don’t walk turns on and will countdown to “0” and turn off when the steady “Don’t Walk” signal turns on. The m*odule shall not have user accessible switches or controls for the purpose of modifying the cycle, icons or digits.*

9.2.5.2 Learning Cycle

At power on, the module enters a single automatic learning cycle. During the automatic learning cycle, the countdown display shall remain dark.

9.2.5.3 Cycle Modification

The unit shall re-program itself if it detects any increase or decrease of Pedestrian Timing. The digits shall go blank once a change is detected and then take one complete pedestrian cycle (with no counter during this cycle) to adjust its buffer timer.

9.2.5.4 Recycling

The module shall allow for consecutive cycles without displaying the steady Hand icon (“Don’t Walk”).

9.2.5.5 Pre-Emption

The module shall recognize preemption events and temporarily modify the crossing cycle accordingly.

- If the controller preempts during the walking man, the countdown shall follow the controller's directions and shall adjust from walking man to flashing hand. It shall start to count down during the flashing hand.
- If the controller preempts during the flashing hand, the countdown shall continue to count down without interruption.

The next cycle, following the preemption event, shall use the correct, initially programmed values. This specification is worded such that the flashing don't walk time is not modified.

9.2.5.6 "Don't Walk" Steady
If the controller output displays Don't Walk steady condition or if both the hand /person go dark and the unit has not arrived to zero, the unit suspends any timing and the digits shall go dark.

9.2.5.7 Power Outage
The digits will go dark for one pedestrian cycle after loss of power of more than 2.0 seconds.

9.2.5.8 Digit Operation
The digits shall remain continuously lit during the clearance cycle and shall not flash in conjunction with the Hand/Don't Walk icon.

9.2.6.0 QUALITY ASSURANCE

9.2.6.1 General
Unless otherwise specified all of the test will be conducted at an ambient temperature of 25°C and at the nominal operating voltage of 120 VAC RMS.

9.2.6.1.1 The modules shall be manufactured in accordance with a vendor quality assurance (QA) program.

9.2.6.1.2 QA process and test result documentation shall be kept on file for a minimum period of seven years

9.2.6.2 Conformance
The module designs not satisfying design qualification testing and the production quality assurance testing performance requirements shall not be labeled, advertised, or sold as conforming to this specification.

9.2.6.3 Production Tests & Inspections
All lamps manufactured shall be affixed with an Intertek ETL Verified label (or other 3rd Party "Nationally Recognized Testing Laboratory/NRTL") to demonstrate compliance to Section 6.3 (Production Tests & Inspections) of the latest ITE PTCSI Pedestrian specification, dated March 19, 2004.

9.2.6.3.1 Production Test Requirement: All new LED modules tendered for sale shall undergo the following Production Test and Inspection prior to shipment. Failure of a module to meet requirements of these Production Test and Inspection shall be cause for rejection. Test results shall be maintained for a period of 5 years following the production of the last production unit.

9.2.6.3.2 Luminous Intensity: All LED modules shall be tested for maintained minimum luminous intensity. A single point measurement with a correlation to the intensity requirements referred to in Section 3.0 may be used. The LED module shall be operated at nominal operating voltage and at an ambient temperature of 25°C (77°F).

9.2.6.3.3 Power Factor: All LED modules shall be tested for power factor per the requirements of Section 4.6.1. A commercially available power factor meter may be used to perform this measurement.

9.2.6.3.4 Current: All LED modules shall be measured for current flow in Amperes. The measured current values shall be compared against those resulting from design qualification measurements in Section 5.4.6.1. Measured current values in excess of 120% of the design qualification current values shall be cause for rejection.

9.2.6.3.5 Visual Inspection: All LED modules shall be visually inspected for any exterior physical damage or assembly anomalies.

9.2.6.4 Design Qualification Testing

9.2.6.4.1 Design Qualification testing shall be performed on new module designs, and when a major design change has been implemented on an existing design.

9.2.6.4.2 High Temperature High Humidity (HTHH): 1000 hours at +60°C (+140°F), 90% Relative Humidity with cycling starting at 30 down to 0. This will ensure that each symbol is properly tested.

9.2.6.4.3 Unless otherwise specified, all of the tests shall be conducted on the same set of randomly selected modules, hereafter called the sample set, at an ambient temperature of 25°C and at the nominal operating voltage of 120 VAC RMS.

9.2.6.4.4 Testing shall be performed once every 5 years or when the module design or LED technology has been changed. The module manufacturer shall retain test data for a minimum period of 7 years and for a period of at least 5 years beyond the last date of manufacture of that model type.

9.2.6.4.5 Conditioning: The module shall be energized for a minimum of 24 hours in an ambient temperature of +60°C (+140°F), 0% Relative Humidity with cycling starting at 99 down to 0. This will ensure that each symbol is properly conditioned.

9.2.6.4.6 Mechanical Vibration: Mechanical vibration testing shall be performed per MIL-STD-883, Test Method 2007.

9.2.6.4.7 Temperature Cycling: Temperature cycling shall be performed per MIL-STD-883, Test method 1010. The temperature range shall include the full ambient operating temperature range specified in Section 2.3.2.

9.2.6.4.8 Moisture Resistance: Moisture resistance testing shall be performed per MIL-STD-810F, Test Method 506.4, Procedure I, Rain and Blowing Rain. The test shall be conducted on stand-alone modules, without a protective housing. The modules shall be vertically oriented, such that the lens is directed towards the wind source when at a zero rotation angle. The modules shall be energized throughout the test. The water shall be at 25° ± 5°C (77° ± 9°F). The wind velocity shall be 80 km/hr (50 mph).

9.2.7.0 WARRANTY AND QUANTITY

Manufacturers will provide the following warranty provisions. Replacement or repair of an LED signal module that fails to function as intended due to workmanship or material defects within the first 5 years (60 months) from the date of delivery. Eight units shall be required for each signal intersection and one additional spare unit.

9.3 ACCESSIBLE PEDESTRIAN SIGNAL SYSTEM

General

9.3.1 Summary

The goal of these specifications for installing accessible pedestrian signals (APS). Is to comply with the California MUTCD and American with Disabilities Act (ADA) and to provide pedestrians with disabilities additional accommodations.

9.3.2 Definitions

accessible pedestrian signal: Accessible pedestrian signal as defined in the California MUTCD.

accessible walk indication: Activated audible and vibrotactile action during the walk interval.

ambient sound level: Background sound level in dB at a given location.
ambient sound sensing microphone: Microphone that measures the ambient sound level in dB and automatically adjusts the APS speaker's volume.

APS assembly: Assembly that includes a pushbutton to actuate the APS components.

audible speech walk message: Audible prerecorded message that communicates to pedestrians which street has the walk interval.

programming mechanism: Device to program the APS' operation.

pushbutton information message: Pushbutton information message as defined in the California MUTCD.

pushbutton locator tone: Pushbutton locator tone as defined in the California MUTCD.

vibrotactile pedestrian device: Vibrotactile pedestrian device as defined in the California MUTCD.

9.3.3 Submittals
Before shipping the APS units to the job site, submit the units with the following to The City of Victorville Signal Maintenance Department:

1. Delivery form including Contract number and your contact information

2. Manufacturer's name

3. Model, lot, and serial numbers

4. Month and year of manufacture

5. Wiring diagram

6. Product data

7. Programming mechanism if not integral to the APS

Submit two copies of APS user and operator manuals for each signalized location as informational submittals. Each manual must have a master item index that includes:
1. Descriptions of the APS and its associated equipment and cables
2. Illustrative block diagrams
3. Manufacturer's contact information
4. Technical data specifications
5. Parts list, descriptions, and settings
6. Fault diagnostic and repair procedures
7. Preventative maintenance procedures for maintaining APS performance parameters

Submit the manufacturer's warranty documentation as an informational submittal before installing the APS.
Submit a record of completed field tests, the APS' final configuration, audible sound level and threshold, and a list of all parameter settings.

9.3.4 Quality Control and Assurance
(a) General
The APS must be compatible with the Nema controller, R and 332 cabinet assembly.
The power to the APS must be connected to the pedestrian signal's terminal blocks.
(b) Functional Testing
Perform 2 field tests on the APS in Victorville CA.:
(1) when traffic is noisy during peak traffic hours and (2) when traffic is quiet during off-peak hours. Notify the Engineer 15 days before testing the APS.

(c) Warranty
The APS must have a 5-year manufacturer's warranty against any defects or failures. The 5-year warranty period starts at Contract acceptance. Deliver a replacement within 10 days after you receive notification of a failed APS. The City does not pay for the replacement. Deliver the replacement to the City of Victorville Traffic Signal Maintenance Shop at:
City of Victorville
14473 McArt Rd
Victorville, CA 92391

(d) Training

Provide a minimum of 8 hours of training by a certified manufacturer's representative for up to 5

Department employees selected by the Engineer. The training must include instruction in installing, programming, adjusting, calibrating, and maintaining the APS.
Furnish materials and equipment for the training.

9.3.5 Materials

The housing for the APS assembly must be made of corrosion-resistant material. Theft proof bolts used for mounting the APS housing to the standard must be stainless steel with a chromium content of 17 percent and a nickel content of 8 percent.
The color of metallic housing must match color no. 33538 of FED-STD-595.
The color of plastic housing must match color no. 17038, 27038, or 37038 of FED-STD-595.
The APS assembly must be rainproof and shockproof in any weather condition.

The APS assembly must include:
1. Pushbutton actuator with a minimum diameter of 2 inches. If a mechanical switch is used, it must have:
   1.1. Operating force of 3.5 lb
   1.2. Maximum pretravel of 5/64 inch
   1.3. Minimum overtravel of 1/32 inch
   1.4. Differential travel from 0.002 to 0.04 inch
2. Vibrotactile device on the pushbutton or on the arrow.
3. Enclosure with an ambient-sound-level-sensing microphone and weatherproof speaker.
The enclosure must:

   3.1 Weigh less than 7 lb.

   3.2 Measure less than 16 by 6 by 5 inches.

   3.3 Fit the Signal and Lighting and Type 1 standards or standard pedestrian push button posts.

   3.4 Have a wiring hole with a diameter not exceeding 1-1/8 inches.

   3.5 Be attached to the pole with 2 screws with a diameter from 1/4 to 3/8 inch suitable for use in tapped holes. The clear space between any 2 holes in the post must be at least twice the diameter of the larger hole.

   3.6 Be delivered complete with mounting assembly compatible with a pedestrian push button post.

4. Pushbutton sign.
The APS speakers and electronic equipment must be installed inside the APS assembly's enclosure. The speaker grills must be located on the surface of the enclosure.
Speakers must not interfere with the housing or its mounting hardware.

The APS must:
1. Include a mechanism for enabling and disabling its operation both at the cabinet and remotely.
2. Have electronic switches, a potentiometer, or a handheld device for controlling and programming the volume level and messaging. Deliver any handheld programming device to the Engineer.
3. Provide information using:
   3.1 Audible speech message that plays when the pushbutton is actuated. The message must include the name of the street to be crossed. The APS must have at least 5 audible message options. The Engineer selects the message. The message must be factory recorded by the manufacture and be delivered on a USB flash storage device to the City of Victorville and also must be maintained by the factory on file for a minimum of 5 years. The message must have a percussive tone consisting of multiple frequencies with a dominant component of 880 Hz. If the tone is selected as the message, it must repeat 8 to 10 ticks per second.
   3.2. Pushbutton locator tone that clicks or beeps. The pushbutton must produce the locator tone at an interval of 1 tone per second. Each tone must have a maximum duration of 0.15 second. The tone volume must adjust in response to the ambient sound level and be audible up to 12 feet from the pushbutton or to the building line, whichever is less.
4. Provide a failsafe mode in case of a failure of any component.
5. Have a pushbutton that when actuated activates the pedestrian walk signal's timing during an APS Failure or provides recall for the phase affected.
6. Provide information using:

6.1. Audible speech walk message. The message must be activated from the beginning of the walk interval and repeated for its duration. An example of the message is "Ameethyst. Walk sign is on to cross Amethyst."

6.2. Pushbutton information message that provides the name of the street to be crossed. The message must play when the pushbutton is actuated. An example of the message is "Wait to cross Amethyst at Hook. Wait."

7. Have a functional pushbutton that activates the pedestrian walk signal whenever actuated, even if the audible speech walk message, the pushbutton information message, the pushbutton locator tone, and the vibrating surface features are disabled.

8. Operate utilizing a two wire system such that a standard push button could be used in place of APS system.

9. Communicate utilizing Ethernet. System shall be able to be upload and download statistics and settings utilizing standard Ethernet connection.

9.1 All software available for APS system shall be provided on CD or USB Flash Drive.

9.3.6 Construction

Arrange to have a manufacturer's representative at the job site when the APS is installed, modified, connected, or reconnected. The APS must not interfere with the controller assembly, the signal installation on signal standards, the pedestrian signal heads, or the terminal compartment blocks. The APS electronic control equipment must reside inside the APS assembly and the standard pedestrian signal head.

The manufacturer is responsible for the compatibility of the components and for making the necessary calibration adjustments to deliver the performance specified. Furnish the equipment and hardware, and then set up, calibrate, and verify the performance of the APS. Point arrows on the pushbutton signs in the same direction as the corresponding crosswalk. Attach the sign to the APS assembly.

9.3.7 Determination of Suitability

Any manufacturer of an accessible pedestrian signal system to be supplied under these Special Provisions shall provide a field demonstration and factory acceptance test of the equipment proposed to be supplied. The demonstration shall be of equipment that has operated satisfactorily in accordance with specifications for a minimum of 180 calendar days subsequent to final acceptance by the jurisdiction to which it was supplied. This equipment shall have been performing those functions proposed under this contract. The demonstration shall be to two members of the City of Victorville Engineering Department designated by the City Traffic Engineer. The two person review team will determine the suitability of the equipment and their report shall be the final authority for determination of suitability of the proposed equipment. All expenses incurred in providing these demonstrations shall be the responsibility of the manufacturer of the proposed equipment.

10. LIGHT EMITTING DIODE (LED) LUMINAIRE (Mast Arm Mounted)

10.1 Specification

This specification is for the purchase of light emitting diode (LED) highway lighting luminaires (herein referred to as luminaires) mast-arm applications. This includes general roadway lighting luminaires for intersection and freeways as well as luminaires for underpasses, bridges, and parking lots. All devices shall meet the general specifications of the Transportation Electrical Equipment Specifications (TEES), Chapter 1--General Specifications, Section 86 of the Standard Specifications as well as the following specification. In case of conflict, this specification shall govern over the TEES, Chapter 1

10.2 General Requirements

10.2.1 Each luminaire shall consist of an assembly that utilizes LEDs as the light source. In addition, a complete luminaire shall consist of a housing, LED array, and electronic driver (power supply).

10.2.2 Each luminaire shall be rated for a minimum operational life of 63,000 hours.

10.2.2.1 Each luminaire will operate at an average operating time of 11.5 hours per night.

10. 2.2.2 Each luminaire is expected to have a minimum operational life of 180 months (15 years).

10.2.3 Each luminaire shall be designed to operate at an average nighttime operating temperature of 70°F.

10.2.3.1 The operating temperature range shall be -40°F to +130°F.

10.2.3.2 Each luminaire is expected to operate above 100°F, but not expected to comply with photometric requirements.

10. 2.3.3 Some parameters and tests (such as LM-79 and LM-80) shall be conducted at different ambient temperatures.

10.2.4 Each luminaire shall meet all parameter of this specification throughout the minimum operational life when operated at the average nighttime operating temperature.

10.2.5 Each luminaire shall be defined by the application (additional applications may be added as needed)

Application	Typically Replaces
Roadway 1	200 Watt HPS mounted at 34 ft
Roadway 2	310 Watt HPS mounted at 40 ft.
Roadway 3	310 Watt HPS mounted at 40 ft. with house/back side control
Roadway 4	400 Watt HPS mounted at 40 ft.

10.2.6 The individual LEDs shall be connected such that a catastrophic loss or the failure of one LED will not result in the loss of the entire luminaire.

10.2.7 Each luminaire shall be listed with Underwriters Laboratory, Inc. under UL 1598 for luminaires in wet locations, or an equivalent standard from a recognized testing laboratory.

10.3 Technical Requirements

10.3.1 Electrical

10. 3.1.1 Power Consumption Maximum power consumption allowed for the luminaire shall be (by application).

Application	Max Wattage
Roadway 1	165
Roadway 2	235
Roadway 3	235
Roadway 4	300

10.3.1.2 Operation Voltage

10.3.1.2.1 The luminaire shall operate from a 60 HZ ±3 HZ AC power source. The fluctuations of line voltage shall have no visible effect on the luminous output.

10.3.1.2.2 The operating voltage may range from 120 VAC to 480 VAC. The luminaire may operate over the entire voltage range or the voltage range may be selected from the two following options.

10.3.1.2.3 The luminaire shall operate over a minimum voltage range of 95 VAC to 277 VAC. The typical operating voltages for this option are 120 VAC, 240 VAC.

10.3.1.2.4 The luminaire shall operate over a minimum voltage range of 347 VAC to 480 VAC. The typical operating voltage for this option is 480 VAC.

10.3.1.3 Power Factor The luminaire shall have a power factor of 0.90 or greater.

10. 3.1.4 THD Total harmonic distortion (current and voltage) induced into an AC power line by a luminaire shall not exceed 20 percent.

10.3.1.5 Surge Suppression The luminaire on-board circuitry shall include surge protection devices (SPD) to withstand high repetition noise transients as a result of utility line switching, nearby lightning strikes, and other interference.

10. 3.1.5.1 The SPD shall protect the luminaire from damage and failure for transient voltages and currents as defined in ANSI/IEEE C64.41.2 (Tables 1 and 4) for Location Category C-High.

10.3.1.5.2 SPD shall conform to UL 1449, or UL 1283, depending of the components used in the design.

10.3.1.5.3 SPD performance shall be tested per the procedures in ANSI/IEEE C62.45 based on ANSI/IEEE C62.41.2 definitions for standard and optional waveforms for Location Category C-High.

10.3.1.6 Operational Performance The LED circuitry shall prevent perceptible flicker to the unaided eye over the voltage range specified above.

10. 3.1.7 Compatibility The luminaire shall be operationally compatible with currently used lighting control systems and photoelectric controls as detail in Standard Specification 86- 6.07 (2006 Version).

10.3.1.8 RF Interference The luminaires and associated on-board circuitry shall meet Class A emission limits referred in Federal Communications Commission (FCC) Title 47, Subpart B, Section 15 regulations concerning the emission of electronic noise.

10.3.2 Photometric Requirements

10.3.2.1 Illuminance

10.3.2.1.1 The minimum maintained illuminance shall be as required in the table below, and be measured as a point.

Application	Mounting Height (ft)	Minimum Maintained Illuminance (fc)	Light Pattern Figure (isofootcandle curve)
Roadway 1	34	0.15	1
Roadway 2	40	0.2	1
Roadway 3	40	0.2	2
Roadway 4	40	0.2	3

10.3.2.1.2 The L70 of the luminaire shall be at least the minimum number of hours as specified in Section 2.2 or greater.

10.3.2.1.3 The measurements shall be calibrated to standard photopic calibrations.

10.3.2.2 Light Color/Quality.

10.3.2.2.1 The luminaire shall have a correlated color temperature (CCT) range of 3,500K to 6,500K.

10.3.2.2.2 The color rendition index (CRI) shall be 65 or greater.

10.3.2.3 Cut-Off Requirements

10.3.2.3.1 The luminaire shall not allow more than 10 percent of the rated lumens to project above 80 degrees from vertical.

10.3.2.3.2 The luminaire shall not allow more than 2.5 percent of the rated lumens to project above 90 degrees from vertical.

10.3.3 Thermal Management

10.3.3.1 The thermal management (of the heat generated by the LEDs) shall be of sufficient capacity to assure proper operation of the luminaire over the minimum operational life (section 2.2).

10.3.3.1.1 The LED manufacturer's maximum junction temperature for the minimum operational life (Section 2.2) shall not be exceeded.

10.3.3.1.2 The designed maximum junction temperature shall not exceed 221°F (105°C)

10.3.3.1.3 The junction-to-ambient thermal resistance shall be 58°F/Watt or less.

10.3.3.2 Thermal management shall be passive by design.

10. 3.3.2.1 The use of fans or other mechanical devices shall not be allowed.

10.3.3.2.2 The heat sink material shall be aluminum or other material of equal or lower thermal resistance.

10.3.3.3 The luminaire may contain circuitry that will automatically reduce the power to the LEDs to a level that will insure that the maximum junction temperature is not exceeded, when the ambient, outside air temperature is 100°F or greater.

10.3.4 Physical and Mechanical Requirements

10.3.4.1 The luminaire shall be a single, self-contained device, not requiring on-site assembly for installation. The power supply for the luminaire shall be integral to the unit.

10.3.4.2 The maximum weight of the luminaire shall be 35 lbs.

10.3.4.3 The maximum effective projected area (when viewed from either side or either end) shall be 1.4 sq ft.

10.3.4.4 The housing shall be a light to medium gray color within the Federal Standard 595B ranges of 26250 to 26500 for semi-gloss sheen, or 36250 to 36500 for flat sheen.

10.3.4.5 Each housing shall be provided with a slip-fitter capable of mounting on a 2 inch pipe tenon.

10.3.4.5.1 This slip-fitter shall fit on mast-arms from 1-5/8 to 2-3/8 in (O.D.)

10.3.4.5.2 The slip-fitter shall be capable of being adjusted a minimum of ±5 degrees from the axis of the tenon in a minimum of five steps (+5, +2.5, 0, -2.5, - 5).

10.3.4.5.3 The clamping brackets of the slip-fitter shall not bottom out on the housing bosses when adjusted within the designed angular range.

10.3.4.5.4 No part of the slip-fitter mounting brackets on the luminaires shall develop a permanent set in excess of 1/32 in. when the two or four 3/8 in. diameter cap screws used for mounting are tightened to 10 ft-lb.

10.3.4.5.5 Two sets of cap screws may be supplied to allow for the slip-fitter to be mounted on any pipe tenon in the acceptable range without the cap screws bottoming out in the threaded holes.

10.3.4.5.6 The cap screws and the clamping bracket(s) shall be made of corrosion resistant materials and be compatible with the luminaire housing and the mast-arm, or treated to prevent galvanic reactions.

10. 3.4.6 The assembly and manufacturing process for the LED luminaire shall be designed to assure all internal components are adequately supported to withstand mechanical shock and vibration from high winds and other sources.

10. 3.4.7 Luminaires to be mounted on horizontal mast arms, when tested in conformance with California Test 611 (as modified below), shall be capable of withstanding cyclic loading in (G = Acceleration of Gravity):

10.3.4.7.1 a vertical plane at a minimum peak acceleration level of 3.0 G peak-to-peak sinusoidal loading (same as 1.5 G peak) with the power supply installed, for a minimum of 2 million cycles without failure of any luminaire parts, and

10.3.4.7.2 a horizontal plane perpendicular to the direction of the mast arm at a minimum peak acceleration level of 1.5 G peak-to-peak sinusoidal loading (same as 0.75-G peak) with the power supply installed, for a minimum of 2 million cycles without failure of any luminaire parts.

10.3.4.8 The housing shall be designed to prevent the buildup of Adequate water on the top of the housing.

10.3.4.8.1 Exposed heat sink fins shall be oriented so that water can freely run off the luminaire, and carry dust and other accumulated debris away from the unit.

10.3.4.9 The optical assembly of the luminaire shall be protected against dust and moisture intrusion per the requirements of IP-66 (minimum).

10.3.4.10 The electronics/power supply enclosure shall be protected per the requirements of IP-43 (minimum).

10.3.4.11 Each luminaire shall be furnished with an ANSI C136.10 compliant, locking type, photocontrolreceptacle. A rain tight shorting cap must be provided and installed. The receptacle must conform to the requirements of Standard Specification 86- 6.07B(1).

10.3.4.11.1 When available, an ANSI C136.41 compliant, locking type photocontrol receptacle with dimming connections shall be furnished in place of the ANSI C136.10 compliant receptacle.

10. 3.4.12 When the components are mounted on a down opening door, the door shall be hinged and secured to the luminaire housing separately from the refractor or lens frame. The door shall be secured to the housing in a manner to prevent its accidental opening. A safety cable shall mechanically connect the door to the housing.

10.3.4.13 Field wires connected to the luminaire shall terminate on a barrier type terminal block secured to the housing. The terminal screws shall be captive and equipped with wire grips for conductors up to No. 6. Each terminal position shall be clearly identified.

10.3.4.14 The power supply shall be contained inside the luminaire.

10.3.4.14.1 The power supply shall be rated for outdoor operation. The power supply must have a minimum IP rating of IP65.

10.3.4.14.2 The power supply shall be rated for a minimum life expectancy equal to or greater than the minimum operation life (Section 2.2) of the luminaire.

10.3.4.14.3 The power supply case temperature shall have a self rise of 45° F or less above ambient temperature in free air with no additional heat sinks.

10.3.4.14.4 The power supply shall have two leads to accept standard 0-10V Dimming control. (compatible with IEC 60929 Annex E)

10.3.4.14.5 If the control leads are open or the analog control signal is lost, the driver will default to 100% power.

10.3.5 Materials

10.3.5.1 Housings shall be fabricated from materials that are designed to withstand a 3000-hour salt spray test as specified in ASTM Designation: B117.

10.3.5.2 Each refractor or lens shall be made from UV inhibited high impact plastic (such as acrylic or polycarbonate) or heat and impact resistant glass, and be resistant to scratching.

10. 3.5.3 All aluminum used in housings and brackets shall be a marine grade alloy with less than 0.2% copper. All exposed aluminum shall be anodized.

10.3.5.4 Polymeric materials (if used) of enclosures containing either the power supply or electronic components of the luminaire shall be made of UL94VO flame retardant materials. The len(s) of the luminaire are excluded from this requirement.

10.3.5.5 Paint or powder coating of the housing shall conform to the requirements of the Caltrans Standard Specifications and the Caltrans Standard Special Provisions.

10.3.6 Luminaire Identification

10.3.6.1 Each luminaire shall have the manufacturer's name, trademark, model number, serial number, date of manufacture (month-year), and lot number as identification permanently marked inside the each unit and the outside of each packaging box.

10.3.6.2 The following operating characteristics shall be permanently marked inside each unit: rated voltage and rated power in Watts and Volt-Ampere.

10.4 Quality Assurance

10.4.1 The luminaires shall be manufactured in accordance with a manufacturer quality assurance (QA) program. The QA program shall include two types of quality assurance: (1) design quality assurance and (2) production quality assurance. The production quality assurance shall include statistically controlled routine tests to ensure minimum performance levels of the modules built to meet this specification, and a documented process of how problems are to be resolved.

10.4.2 QA process and test results documentation shall be kept on file for a minimum period of seven years.

10.4.3 LED luminaire designs not satisfying design qualification testing and the production quality assurance testing performance requirements described below shall not be labeled, advertised, or sold as conforming to this specification.

10.4.4 Design Qualification Testing

10.4.4.1 Design Qualification Testing shall be performed by the manufacturer or an independent testing lab hired by the manufacturer on new luminaire designs, and when a major design change has been implemented on an existing design. A major design change is defined as a design change (electrical or physical) which changes any of the performance characteristics of the luminaire, results in a different circuit configuration for the power supply, or changes the layout of the individual LED's in the module.

10.4.4.2 A quantity of two units for each design shall be submitted for Design Qualification Testing

10.4.4.2.1 Test units shall be submitted to The Coty of Victorville after the manufacturer's testing is complete. 10.4.4.2.2 Manufacturer's testing data shall be submitted with test units for Victorville verification of Design Qualification Testing data.

10.4.4.2.3 Product submittals shall be accompanied by product specification sheets or other documentation that includes the designed parameters as detailed in this specification. These parameters include (but not limited to):

10.4.4.2.3.1 Maximum power in Watts

10.4.4.2.3.2 Maximum Designed Junction Temperature

10.4.4.2.3.3 Heat sink area in square inches.

10.4.4.2.3.4 Designed junction to ambient thermal resistance calculation with thermal resistance components clearly defined.

10.4.4.2.3.5 L70 in hours, when extrapolated for the average nighttime operating temperature (section 2.3)

10. 4.4.2.4 Product submittals shall be accompanied by IES LM-79 and IES LM-80 compliant test reports from a CALiPER qualified or NVLAP approved testing laboratory for the specific model being submitted.

10.4.4.2.5 Product submittals shall be accompanied by a IES LM63 compliant photometric file (IES) based on the LM-79 test report.

10.4.4.2.6 Product submittals shall be accompanied by initial and depreciated isofootcandle charts showing the specified minimum illuminance curve for that particular application.

10.4.4.2.6.1 The charts shall be calibrated to feet and show a 40 by 40 foot grid.

10.4.4.2.6.2 The charts shall be calibrated to the mounting height specified for that particular application.

10.4.4.2.6.3 The depreciated isofootcandle curve shall be calculated at the minimum operational life.

10. 4.4.2.7 Product submittals shall be accompanied by a test report showing SPD performance as tested per the definitions and procedures in ANSI/IEEE C62.41.2 and ANSI/IEEE C62.45.

10.4.4.2.8 Product submittals shall be accompanied by a test report detailing the results of California Test 611 (or equal), the mechanical vibration requirements.

10.4.4.2.9 One test unit shall be fitted with temperature sensors

10.4.4.2.9.1 Temperature sensors shall be thermistor or thermocouple type

10.4.4.2.9.2 Thermocouples will be either Type K or Type C.

10.4.4.2.9.3 Thermistors shall be negative temperature coefficient (NTC) type with a nominal resistance of 20k ohm.

10.4.4.2.9.4 Temperature sensors shall be mounted on the LED solder pads as close to the LED as possible.

10.4.4.2.9.5 One temperature sensor shall be mounted on the power supply (driver) case.
10.4.4.2.9.6 Light bar or modular systems shall have one sensor for each module, mounted as close to the center of the module.
10.4.4.2.9.7 Other configurations shall have at least 5 sensors per luminaire.
10.4.4.2.9.8 The appropriate thermocouple wire shall be used. The leads shall be a minimum of 6 ft.
10.4.4.2.9.9 Documentation shall accompany the test unit that details the type of sensor used.

10. 4.4.3 Burn In. The sample luminaires shall be energized for a minimum of 24 hours, at 100 percent on-time duty cycle, at a temperature of +70°F (+21°C) before performing any design qualification testing.

10. 4.4.4 Any failure of the luminaire, which renders the unit non-compliant with the specification after burn-in, shall be cause for rejection.

10.4.4.5 The luminaire shall be tested according to California Test No. 678, and as described herein.

10.4.4.5.1 Luminaire performance shall be judged against the specified minimum illuminance in the specified pattern for a particular application.

10. 4.4.5.2 The luminaire lighting performance shall be adjusted (depreciated) for the minimum life expectancy (Section 2.2).

10.4.4.5.2.1 The performance shall be adjusted (depreciated) by using the LED manufacturer's data or the data from the LM-80 test report, which ever one results in a higher level of lumen depreciation.

10.4.5 Quality Assurance Testing (random sample testing)

10.4.5.1.1 The City may perform random sample testing on all shipments.

10.4.5.1.2 Testing shall be completed within than 30 days after delivery to the Transportation Laboratory.

10. 4.5.1.3 Luminaires shall be tested according to California Test No. 678, and as described herein.

10.4.5.1.4 All parameters of the specification may be tested on the shipment sample.

10. 5 Warranty The manufacturer shall provide a warranty against loss of performance and defects in materials and workmanship for the luminaires for a period of 84 months after acceptance of the luminaires. Replacement luminaires shall be provided promptly after receipt of luminaires that have failed at no cost to the City of Victorville. All warranty documentation shall be given to the Translab prior to random sample testing.

11. LIGHT EMITTING DIODE (LED) IISNS

11.1 Description. Furnish and install Light Emitting Diode (LED) internally lighted street name signs attached to IISNS mast arms as shown on the plans.

11.2. Materials. Furnished in accordance with the NEC. Conform Signs and sign messages to the dimensions and details shown on the plans and the requirements shown below. Use single side message or double side message signs as shown on the plans.

11.2.1 Ensure materials conform to Departmental Materials Specification DMS-8311, except that the minimum average brightness reading at the letters is 600 lux instead of 1600 lux. Make a brochure and/or shop drawing submittals on the fixtures, sign, sign message and mounting hardware. Submit 6 sets of submittals to the Engineer for approval. Unless otherwise shown on the plans or required in this specification, all fasteners and screws in or on the fixture are stainless steel type 302 or 305, brass or aluminum. Galvanize steel nuts, bolts, and hardware in accordance with ASTM A153.

11.2.2 Ensure Clamp on street name sign mast arms are in accordance with the details shown on the plans. The sign assembly standard widths are 48 in., 72 in. and 96 in.

11.2.3 Ensure standard height is between 19 in. and 23 in. Use single or double faced as required by the plans.

11.2.4 Ensure body is aluminum one-piece box type enclosure and separate hinged door assembly. Include drip rails for the top of the sign body to prevent water from entering the electrical housing.

11.2.5 Continuously weld all seams for a watertight seal. Place a minimum of 3 .25-in. drain holes in the bottom of the sign body, a maximum of one foot from each side of the sign. Use glossy black for exterior color of the sign assembly.

11.2.6 Powder-coat paint all exterior surfaces of the sign assembly in accordance with Military Standard MIL-C-24712.

11.2.7 Ensure finish meets the requirements of ASTM D 3359, ASTM D 3363, and ASTM D 552. Quality assurance program will meet MIL-1-45208A. Use sides with a removable face.

11.2.8 Use one-piece aluminum door frame construction.

11.2.9 Use doors that open in a downward motion. Secure sign face with four frame plates, (bottom, top, and two sides), secured by studs and nuts, holding the sign face in place. No Slide–in grooves will be used. Use full-length stainless steel hinge for the doors bottom edge.

11.2.10 Seal Door with a UL listed foam gasket. Install gaskets continuously on the doorframe to seal the sign face to the doorframe. Install another strip on the sign body matching where the door seals.

11.2.11 Secure door from opening by using a minimum of two stainless steel ¼-20 thumbscrews to prevent the door from opening when the sign is flexed. Screw threaded 2-3 6333 01-06 portion of the thumbscrew into captive nut assembly on the sign body.

11.2.12 Use hardware of the type 304 or 316 stainless steel. Construct sign face of 1/8 in. white polycarbonate.

11.2.13 Use UL approved foam gaskets, to provide a watertight seal between the door and the housing and between the sign panel and the doorframe.

11.2.14 Include replaceable fuse at the electrical power wire entrance compartment.

11.2.15 Design, test and construct sign panel and mounting assemblies so that no permanent deformation, warping or failure will occur when subjected to 110 mph wind loads.

11.2.16 Include solid-state high flux/high output ultra high brightness white LED light engine strips (described in detail below), utilizing state-of-the-art high power LED's and high efficient heat dissipating metal carrier body.

11.2.17 Ensure length of strips effectively light the sign face. LED light engine maximum power values will not exceed 108 W for a 6-ft. sign that is illuminated on both sides and 144 W for an 8 ft. sign illuminated on both sides. Either of the following configurations will be allowed: Mount light strips horizontally in the top of the sign at an angle towards the face of the sign. (1 row for single face and 2 rows for double face signs). Utilize integral internal reflectors of the strips that will maximize the light output at the sign face. Mount light strips directly to the top of the sign body so as to be thermally linked to the sign body for heat dissipation. Use secondary reflector in the bottom of the sign to spread of the light evenly over the lens. Use reflectors made of mirror finish aluminum alzak material. or; mount light strips horizontally in 3 rows per illuminated side, within the interior of the sign of adequate distance from each side (for double face signs) or from the single side (in single face signs) to allow for proper light distribution across the sign face so as there are no dark spots on the sign face. Lengths of the strips are 33 or 45 in., with LED's on 6 in. centers.

11.2.18 Ensure individual light strip will does not consume greater than 9 watts at the 33 in. length (for 3 ft. strips) and greater than 12 watts at the 45 in. length (for 4 ft. strips).

11.2.19 Ensure maximum power consumption per foot of the sign does not exceed 9 watts for single-sided signs or 18 watts for double-sided signs. Use 120Vac operating voltage.

11.2.20 Viewing angles of the LED's will be from 70-120 degrees with the color temperature of the white LEDs of 3500-4500 ºK to 8000 ºK. Locate screened weep holes at strategic points in the bottom of the housing assembly to allow drainage of condensation.

11.2.21 Construct sign fixture housing of extruded, cast and/or fabricated aluminum components. Single sided signs with aluminum panels, minimum 0.050 in. thick, placed on back side of fixture in sign panel position. Frame and gasket aluminum panels in the same manner as sign panels.

11.2.22 Use a mounting block clevis pin that is minimum 3/8 in. stainless steel bar through oilimpregnated bronze sleeve bearings to allow for controlled movement of the sign swing 3-3 6333 01-06 under wind gust loads.

11.2.23 Provide an adjustment bolt for each mounting block to permit leveling of the sign. Form mast arm clamp brackets and hanger bars of heat treated aluminum bar stock or galvanized steel and ensure adequate design and strength.

11. 3. Sampling. Sample in accordance with Test Method Tex-714-I, except that the minimum sample number will be one.

11.4 Construction Methods. Fabricate and install internally lighted street name signs in accordance with the details and dimensions shown on the plans, specified, or as approved by the Engineer. Install signs level and ensure brackets are plumb. Ensure installation is neat and

professional in appearance. Use industry and utility safety practices when erecting signs located near any overhead utilities. Consult with the appropriate utility company prior to beginning such work. Ensure power for internally lighted street name sign is powered from the same service pole that provides power to the traffic signal on which the sign is mounted. Install a 20 amp circuit breaker and photocell when necessary. Signs will be grounded by an insulated or bare equipment grounding conductor connected between the fixture and the equipment grounding conductor in the base of the pole (due to electrical isolation provided by sleeve bearings).

11.5 Warranty. Warrant the LED light engine for the illuminated street sign against any failure due to workmanship, material defects or intensity within the first 60 months of field operation.
11.5.1 Ensure the LED light engine meets or exceeds minimum luminous intensity values during the 60 months of field operation over the temperature range of -40°C to +74°C.
11.5.2 Ensure manufacturer provides a written warranty against defects in materials and workmanship for LED signal modules for a period of 60 months after installation of LED signal modules.
11.5.3 Provide replacement LED light engine modules within 5 days after receipt of failed LED light engine l modules at no cost to the City, except the cost of shipping the failed modules

11.6 Measurement. This Item will be measured as each unit installed, complete in place.

11.7 Payment. The work performed and materials furnished in accordance with this Item and measured as provided under "Measurement", will be paid for at the unit bid price for "LED Internally Lighted Street Name Signs", of the size and type specified. This price will be full compensation for furnishing and erecting the signs; for furnishing and erecting the support arm clamp assembly; for furnishing and installing liquid tight flexible metal conduit; for all required circuit breakers and photocells; and for all labor, tools, equipment and incidentals necessary to complete the work.

12. TURN-ON

12.1 The Contractor shall arrange to have a technician, qualified to work on the controller and employed by the controller manufacturer or his representative, present at the time the equipment is turned on.

12.2 The Contractor shall arrange to have a factory trained individual representing the manufacturer of each product present at signal turn on including but not limited to; controller, cabinet, Battery back up, video detection, and Pre-Emption.

12.3 Contingent items. The lump sum shall include all extender boards plus any incidental equipment necessary to completely test the controller unit during normal operation.

12.4 This special provision is intended to provide for a complete and functioning intersection. All wires, cables, adapter, jumpers, and other items required to allow the intersection to operate to the fullest extent of the capability of the provided equipment but not specifically mentioned in these special provisions shall be supplied at no additional cost.

12.5 Signal turn on shall be scheduled between the hours of 10:00 AM and 2:00PM. Signal turn on shall be on a regular business day and shall not precede a day that City Hall is closed. In order to allow for operational observation. Unless approved by the City Engineer.

12.6 Signal turn on shall not be scheduled until after the cabinet and all equipment have been tested and approved by the City of Victorville Engineering Department Maintenance Division.

12.7 Turn on shall include configuration and testing of all equipment as well as central software and communication systems.
During the City cabinet test phase the Contractor shall arrange to have qualified technicians to complete modifications to the City Central Software system (ATMS Now by Naztec/Trafficware). The City shall provide the technical information (IP address scheme) with the project specifications. Project shall not be considered complete until all communication and operation is accepted.

APPENDIX I

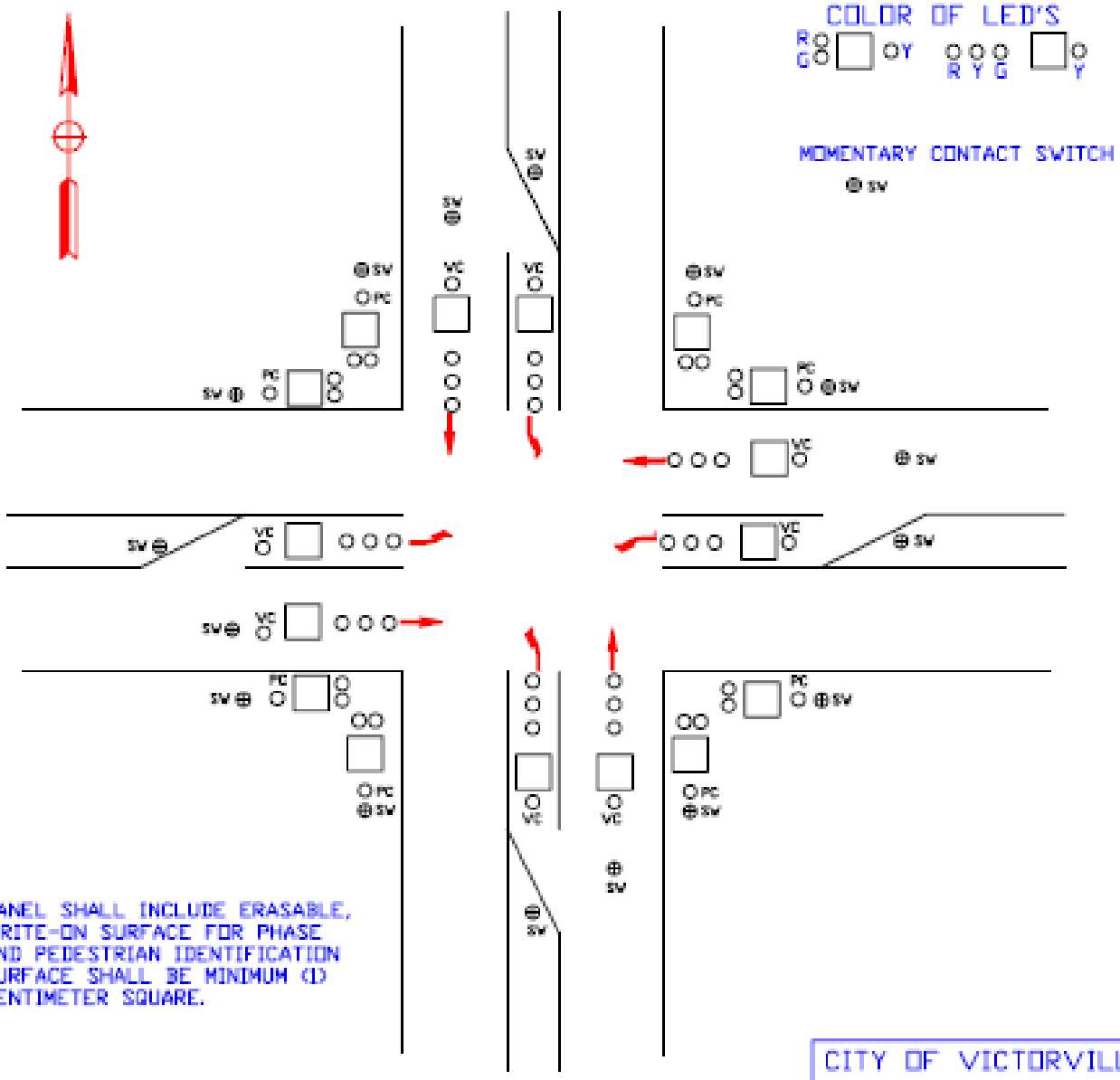

PANEL SHALL INCLUDE ERASABLE, WRITE-ON SURFACE FOR PHASE AND PEDESTRIAN IDENTIFICATION SURFACE SHALL BE MINIMUM (1) CENTIMETER SQUARE.

CITY OF VICTORVILLE		
8 PHASE PANEL DISPLAY		
1/96	N.T.S.	G. HELDRETH

Foundation Layout

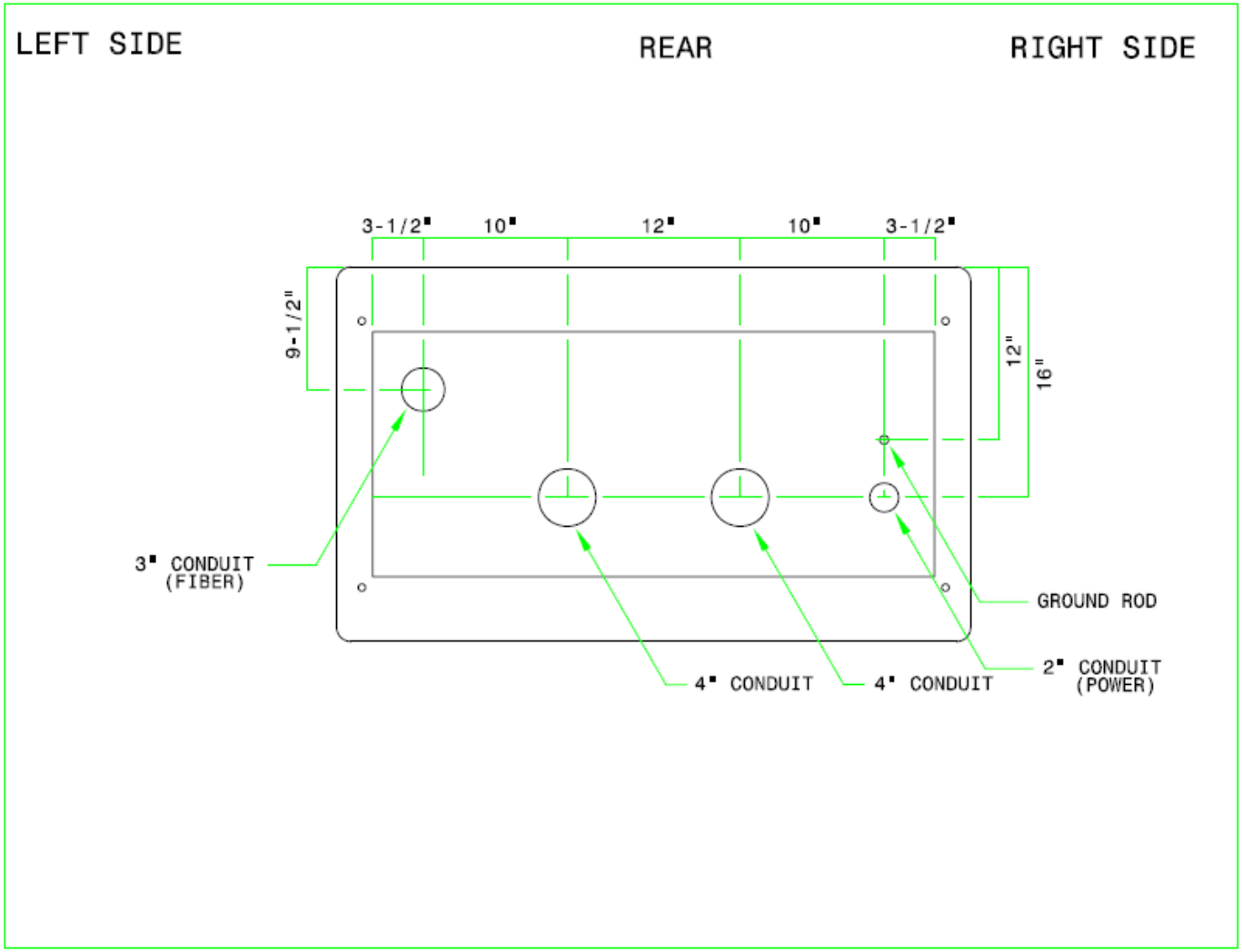

City of Victorville
March 5, 2009

Cabinet Layout

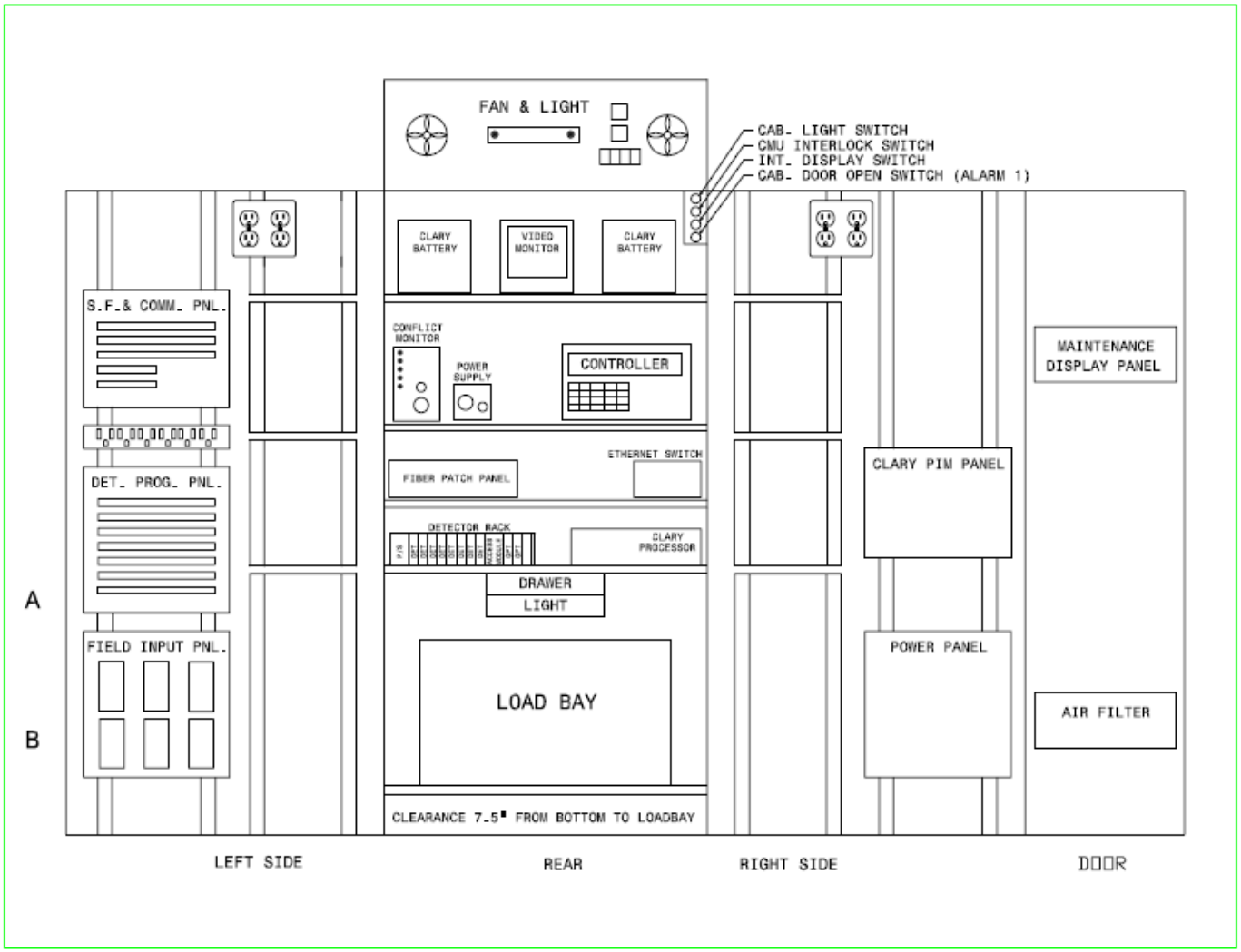

City of Victorville
March 5, 2009

DETECTOR RACK

VANTAGE EDGE 2
PROCESSORS (4)

Cost Breakdown

		Unit	Cost
	Traffic Signal Controller	EA	
	Traffic Signal Cabinet Enclosure	EA	
	Video detection system	EA	
	Emergency Preempt system	EA	
	Conflict monitor	EA	
	Traffic Surveillance equipment	EA	
	Ethernet radios	EA	
*	Fiber cable (if required)	LF	
	Ethernet over copper wire (if required)	EA	
	Ethernet switch	EA	
	Digi Port Server	EA	
	Uninterruptible power supply	EA	
	Accessible Pedestrian System (APS)	EA	
	Pedestrian signal heads and hardware	EA	
*	Standards and Poles	EA	
	LED Vehicle indications	EA	
	Signal heads and hardware	EA	
	luminaries and lighting fixtures (LED)	EA	
	Internally illuminated street name signs (LED)	EA	
	Electrical service equipment enclosure	EA	
*	Foundations	EA	
*	Conduit	LF	
	Pull boxes	EA	
*	Conductors and cables	LF	
	telephone demarcation cabinet	EA	

*Cost breakdown must include type, size and installation method

Submittal Requirement list

	Manufacturer/Supplier	Model	Approval
Traffic Signal Controller			
Traffic Signal Cabinet Enclosure			
Video detection system			
Emergency Preempt system			
Conflict monitor			
Traffic Surveillance equipment			
Ethernet radios			
Fiber cable (if required)			
Ethernet over copper wire (if required)			
Ethernet switch			
Digi Port Server			
Uninterruptible power supply			
Accessible Pedestrian Signal (APS) System			
Pedestrian indications			
Signal poles			
LED Vehicle indications			
Luminaries			
Internally illuminated street name signs (LED)			
Electrical service pedestal			

This is the minimum equipment that shall have submittals provided. Additional submittals may be required and shall be accepted.

Project: Any Street @ Cross Street

Date Received_____

TABLE E-1
INTERSECTION EQUIPMENT LIST

		Quantity	
1	TRAFFIC SIGNAL CONTROLLER	1	
2	TRAFFIC SIGNAL ENCLOSURE CABINET	1	
3	VIDEO DETECTION SYSTEM		
	Cameras	4	
	Single channel Processors	4	
	I/O Module	1	
	Extension modules	2	
	software package	1	
	Edge connect module	1	
4	EMERGENCY PREEMPTION SYSTEM		
	Emitters	0	
	Remote Coding unit	0	
	Detectors	4	
	Phase selector	1	
	Card Rack	0	
	System Interface software	1	
	EVP Central Management software license	1	
	Serial to Ethernet Port Server	1	
5	CONFLICT MONITOR	2	
6	Traffic Surveillance equipment		
	Four Port Video Server	1	
	Ethernet Pan/Tilt/Zoom Camera	1	
7	Communications Equipment		
	Ethernet radios	2	
	Fiber cable	N/A	
	Ethernet over copper wire	N/A	
	Ethernet switch (system)	2	
	Cisco IE3000-8TC Switch, 8 10/100 + 2 T/SFP		
	Cisco IEM-3000-4SM 4port SFP expansion module		
	Cisco PWR-IE50W-AC AC Power Module		
	Cisco 100Mbps Single Mode Rugged SFP- 6 each		
8	Uninteruptable power supply	1	
9	Pedistrian Requirements		
	Pedistrian indications	8	
	Accessible Pedestrian Signal (APS) System	1	
	APS push button Assembly	8	
	Signal poles	per Plan	
	LED Vehicle indications	per Plan	
	Luminaires	4	
	LED Internallally illuminated street name signs	4	
	Electrical service pedistal	1	
Intersection: Any Street @ Cross Street			

INTERSECTION AND EQUIPMENT IP ADDRESS ASIGNMENT

Intersection: Any Street @ Cross Street		
192.168.100.5	Gateway	
255.255.254.0	Subnet Mask	
192.168.101.1X0	Switch	
101.1X1	Controller	
101.1X2	Iteris system	
101.1X3	Clary system	
101.1X4	PTZ Camera	
101.1X5	Ethernet Radio	
101.1X6	EVP	
101.1X7	Radio Master	
101.1X8	Pedestrian System	
101.1X9	spare	

APPENDIX D

(REVISED STATE STANDARD SPECIFICATIONS)

REVISED STANDARD SPECIFICATIONS DATED 04-20-18

ORGANIZATION

Revised standard specifications are under headings that correspond with the main-section headings of the *Standard Specifications*. A main-section heading is a heading shown in the table of contents of the *Standard Specifications*. A date under a main-section heading is the date of the latest revision to the section.

Each revision to the *Standard Specifications* begins with a revision clause that describes or introduces a revision to the *Standard Specifications*. For a revision clause that describes a revision, the date on the right above the clause is the publication date of the revision. For a revision clause that introduces a revision, the date on the right above a revised term, phrase, clause, paragraph, or section is the publication date of the revised term, phrase, clause, paragraph, or section. For a multiple-paragraph or multiple-section revision, the date on the right above a paragraph or section is the publication date of the paragraphs or sections that follow.

Any paragraph added or deleted by a revision clause does not change the paragraph numbering of the *Standard Specifications* for any other reference to a paragraph of the *Standard Specifications*.

^^

DIVISION I GENERAL PROVISIONS

1 GENERAL

04-20-18

01-20-17

Delete item 1 in the list in the 12th paragraph of section 1-1.01.

Add to the 1st table of section 1-1.06:

07-21-17

APCD	air pollution control district
AQMD	air quality management district
CISS	cast-in-steel shell
CSL	crosshole sonic logging
CSS	cement stabilized soil
GGL	gamma-gamma logging

Replace *plant establishment period* and its definition in section 1-1.07B with:

01-20-17

plant establishment period: Number of working days shown on the *Notice to Bidders* for plant establishment work.

Add to section 1-1.07B:

01-20-17

permanent erosion control establishment period: Number of working days shown on the *Notice to Bidders* for permanent erosion control establishment work.

07-21-17

traffic break: Traffic operation performed by a California Highway Patrol officer or other law enforcement officer to slow or stop traffic within the traveled way.

Replace the 1st row of the table in section 1-1.11 with:

07-21-17

Authorized Facility Audit List	http://www.dot.ca.gov/hq/esc/Translab/OSM/documents/smdocuments/Internet_auditlisting.pdf	--	--
Authorized Material List	http://www.dot.ca.gov/hq/esc/approved_products_list/	--	--
Authorized Material Source List	http://www.dot.ca.gov/hq/esc/Translab/authorized_material_source_list/	--	--
Authorized Material Systems List	http://www.dot.ca.gov/hq/esc/Translab/authorized_systems_list/	--	--
Authorized Laboratory List	http://www.dot.ca.gov/hq/esc/Translab/authorized_laboratories_list/	--	--

12-02-16

Delete the row for Bidders' Exchange in the table of section 1-1.11.

^^

2 BIDDING

07-21-17

Replace the headings and paragraphs of section 2 with:

12-02-16

2-1.01 GENERAL

Section 2 includes specifications related to bid eligibility and the bidding process.

2-1.02 BID INELIGIBILITY

A firm that has provided architectural or engineering services to the Department for this contract before bid submittal for this contract is prohibited from any of the following:

1. Submitting a bid
2. Subcontracting for a part of the work
3. Supplying materials

2-1.03 CONTRACTOR REGISTRATION

No contractor or subcontractor may be listed on a bid proposal for a public works project unless registered with the Department of Industrial Relations pursuant to Labor Code section 1725.5 [with limited exceptions from this requirement for bid purposes only under Labor Code section 1771.1(a)].

01-20-17

2-1.04 PREBID OUTREACH MEETING

Section 2-1.04 applies if a mandatory prebid meeting is shown on the *Notice to Bidders*.

The Department will conduct a meeting to provide small businesses, including DVBEs and DBEs, the opportunity to meet and interact with prospective bidders in an effort to increase their participation in the performance of contracts.

Each bidder must attend the meeting. The bidder's representative must be a company officer, project superintendent, or project estimator. For a joint venture, one of the parties must attend the mandatory prebid meeting.

The Department does not accept a bid from a bidder who did not attend the meeting.

A sign-in sheet will be used to identify the attendees. Each bidder must include the name and title of the company representative attending the meeting.

The Department may hold a single prebid meeting for more than one contract. Sign the sign-in sheet for the contract you intend to bid on. If you are bidding on multiple contracts, sign each sign-in sheet for each contract you intend to bid on. The sign-in sheets, with the names of all companies in attendance at each prebid meeting, will be made available at the website shown on the *Notice to Bidders* for bidder inquiries.

The successful bidder is required to report each small business hired to work on this Contract as a result of the meeting.

2-1.05 RESERVED

12-02-16

2-1.06 BID DOCUMENTS

2-1.06A General

The *Bid* book includes bid forms and certifications, including forms not submitted through the electronic bidding service.

The *Notice to Bidders and Special Provisions* includes the *Notice to Bidders*, revised standard specifications, and special provisions.

The *Bid* book, including *Bid* book forms not available through the electronic bidding service, *Notice to Bidders and Special Provisions*, project plans, and any addenda to these documents may be accessed at the Department's Office of Construction Contract Awards website.

The *Standard Specifications* and *Standard Plans* may be viewed at the Department's Office of Construction Contract Awards website and may be purchased at the Publication Distribution Unit.

2-1.06B Supplemental Project Information

The Department makes supplemental information available as specified in the special provisions.

Logs of test borings are supplemental project information.

07-21-17

If an *Information Handout* or electronic design files are available, you may view them at the Contract Plans and Special Provisions link at the Department's Office of Construction Contract Awards website. Electronic design files contain design information such as cross sections, digital models, and roadway design alignments and profiles.

12-02-16

If rock cores are available, you may view them by sending a request to Coreroom@dot.ca.gov.

If other supplemental project information is available for inspection, you may view it by phoning in a request.

Make your request at least 7 days before viewing. Include in your request:

1. District-County-Route
2. Contract number
3. Viewing date
4. Contact information, including telephone number

For rock cores, also include the bridge number in your request.

If bridge as-built drawings are available:

1. For a project in District 1 through 6 or 10, you may request them from the Office of Structure Maintenance and Investigations, fax (916) 227-8357
2. For a project in District 7, 8, 9, 11, or 12, you may request them from the Office of Structure Maintenance and Investigations, fax (916) 227-8357, and they are available at the Office of Structure Maintenance and Investigations, Los Angeles, CA, telephone (213) 897-0877

As-built drawings may not show existing dimensions and conditions. Where new construction dimensions are dependent on existing bridge dimensions, verify the field dimensions and adjust the dimensions of the work to fit the existing conditions.

2-1.06C–2-1.06D Reserved

2-1.07 JOB SITE AND DOCUMENT EXAMINATION

Examine the job site and bid documents. Notify the Department of apparent errors and patent ambiguities in the plans, specifications, and Bid Item List. Failure to do so may result in rejection of a bid or rescission of an award.

Bid submission is your acknowledgment that you have examined the job site and bid documents and are satisfied with:

1. General and local conditions to be encountered
2. Character, quality, and scope of work to be performed
3. Quantities of materials to be furnished
4. Character, quality, and quantity of surface and subsurface materials or obstacles
5. Requirements of the contract

2-1.08 RESERVED

2-1.09 BID ITEM LIST

Submit a bid based on the bid item quantities shown on the Bid Item List.

2-1.10 SUBCONTRACTOR LIST

On the Subcontractor List form, list each subcontractor that will perform work in an amount in excess of 1/2 of 1 percent of the total bid or $10,000, whichever is greater (Pub Cont Code § 4100 et seq.).

For each subcontractor listed, the Subcontractor List form must show:

1. Business name and the location of its place of business.
2. California contractor license number for a non-federal-aid contract.
3. Public works contractor registration number.
4. Portion of work it will perform. Show the portion of the work by:
   - 4.1. Bid item numbers for the subcontracted work
   - 4.2. Percentage of the subcontracted work for each bid item listed
   - 4.3. Description of the subcontracted work if the percentage of the bid item listed is less than 100 percent

2-1.11 RESERVED

2-1.12 DISADVANTAGED BUSINESS ENTERPRISES

2-1.12A General

Section 2-1.12 applies to a federal-aid contract.

Under 49 CFR 26.13(b):

> The contractor, sub recipient or subcontractor shall not discriminate on the basis of race, color, national origin, or sex in the performance of this contract. The contractor shall carry out applicable requirements of 49 CFR part 26 in the award and administration of DOT-assisted contracts. Failure by the contractor to carry out these requirements is a material breach of this contract, which may result in the termination of this contract or such other remedy as the recipient deems appropriate, which may include, but is not limited to:

(1) Withholding monthly progress payments;
(2) Assessing sanctions;
(3) Liquidated damages; and/or
(4) Disqualifying the contractor from future bidding as non-responsible.

Include this assurance in each subcontract you sign with a subcontractor.

2-1.12B Disadvantaged Business Enterprise Goal

2-1.12B(1) General

Section 2-1.12B applies if a DBE goal is shown on the *Notice to Bidders*.

The Department shows a goal for DBEs to comply with the DBE program objectives provided in 49 CFR 26.1.

Make work available to DBEs and select work parts consistent with the available DBEs, including subcontractors, suppliers, service providers, and truckers.

Meet the DBE goal shown on the *Notice to Bidders* or demonstrate that you made adequate good faith efforts to meet this goal.

You are responsible to verify at bid opening the DBE firm is certified as a DBE by the California Unified Certification Program and possesses the work codes applicable to the type of work the firm will perform on the Contract.

Determine that selected DBEs perform a commercially useful function for the type of work the DBE will perform on the Contract as provided in 49 CFR 26.55(c)(1)–(4). Under 49 CFR 26.55(c)(1)–(4), the DBE must be responsible for the execution of a distinct element of work and must carry out its responsibility by actually performing, managing, and supervising the work.

All DBE participation will count toward the Department's federally mandated statewide overall DBE goal.

Credit for materials or supplies you purchase from DBEs will be evaluated on a contract-by-contract basis and counts toward the goal in the following manner:

1. 100 percent if the materials or supplies are obtained from a DBE manufacturer.
2. 60 percent if the materials or supplies are obtained from a DBE regular dealer.
3. Only fees, commissions, and charges for assistance in the procurement and delivery of materials or supplies if they are obtained from a DBE that is neither a manufacturer nor a regular dealer. 49 CFR 26.55 defines *manufacturer* and *regular dealer*.

You receive credit toward the goal if you employ a DBE trucking company that is performing a commercially useful function. The Department uses the following factors in determining whether a DBE trucking company is performing a commercially useful function:

- The DBE must be responsible for the management and supervision of the entire trucking operation for which it is responsible on a particular contract, and there cannot be a contrived arrangement for the purpose of meeting DBE goals.
- The DBE must itself own and operate at least one fully licensed, insured, and operational truck used on the contract.
- The DBE receives credit for the total value of the transportation services it provides on the Contract using trucks it owns, insures, and operates using drivers it employs.
- The DBE may lease trucks from another DBE firm, including an owner-operator who is certified as a DBE. The DBE who leases trucks from another DBE receives credit for the total value of the transportation services the lessee DBE provides on the Contract.
- The DBE may lease trucks without drivers from a non-DBE truck leasing company. If the DBE leases trucks from a non-DBE truck leasing company and uses its own employees as drivers, it is entitled to credit for the total value of these hauling services.
- A lease must indicate that the DBE has exclusive use of and control over the truck. This does not preclude the leased truck from working for others during the term of the lease with the consent of the DBE, so long as the lease gives the DBE absolute priority for use of the leased truck. Leased trucks must display the name and identification number of the DBE.

[49 CFR 26.55(d)]

2-1.12B(2) DBE Commitment Submittal

Submit DBE information under section 2-1.33.

Submit a copy of the quote from each DBE shown on the DBE Commitment form that describes the type and dollar amount of work shown on the form. Submit a DBE Confirmation form for each DBE shown on the DBE Commitment form to establish that it will be participating in the Contract in the type and dollar amount of work shown on the form. If a DBE is participating as a joint venture partner, submit a copy of the joint venture agreement.

2-1.12B(3) DBE Good Faith Efforts Submittal

You can meet the DBE requirements by either documenting commitments to DBEs to meet the Contract goal or by documenting adequate good faith efforts to meet the Contract goal. An adequate good faith effort means that the bidder must show that it took all necessary and reasonable steps to achieve a DBE goal that, by their scope, intensity, and appropriateness to the objective, could reasonably be expected to meet the DBE goal.

If you have not met the DBE goal, complete and submit the DBE Good Faith Efforts Documentation form under section 2-1.33 showing that you made adequate good faith efforts to meet the goal. Only good faith efforts directed toward obtaining participation by DBEs are considered.

Submit good faith efforts documentation within the specified time to protect your eligibility for award of the contract in the event the Department finds that the DBE goal has not been met.

Refer to 49 CFR 26 app A for guidance regarding evaluation of good faith efforts to meet the DBE goal.

The Department considers DBE commitments of other bidders in determining whether the low bidder made good faith efforts to meet the DBE goal.

2-1.13–2-1.14 RESERVED

2-1.15 DISABLED VETERAN BUSINESS ENTERPRISES

2-1.15A General

Section 2-1.15 applies to a non-federal-aid contract.

Take necessary and reasonable steps to ensure that DVBEs have the opportunity to participate in the Contract.

Comply with Mil & Vet Code § 999 et seq.

2-1.15B Projects $5 Million or Less

Section 2-1.15B applies to a project with an estimated cost of $5 million or less.

Make work available to DVBEs and select work parts consistent with the available DVBE subcontractors and suppliers.

Meet the goal shown on the *Notice to Bidders*.

Complete and submit the Certified DVBE Summary form under section 2-1.33. List all DVBE participation on this form.

If a DVBE joint venture is used, submit the joint venture agreement with the Certified DVBE Summary form.

List each 1st-tier DVBE subcontractor on the Subcontractor List form regardless of its percentage of the total bid.

2-1.15C Projects More Than $5 Million

2-1.15C(1) General

Section 2-1.15C applies to a project with an estimated cost of more than $5 million.

The Department encourages bidders to obtain DVBE participation to ensure the Department achieves its State-mandated overall DVBE goal.

If you obtain DVBE participation:

1. Complete and submit the Certified DVBE Summary form under section 2-1.33. List all DVBE participation on this form.
2. List each 1st-tier DVBE subcontractor on the Subcontractor List form regardless of its percentage of the total bid.

If a DVBE joint venture is used, submit the joint venture agreement with the Certified DVBE Summary form.

2-1.15C(2) DVBE Incentive

The Department grants a DVBE incentive to each bidder who achieves a DVBE participation of 1 percent or greater (Mil & Vet Code 999.5 and Code of Regs § 1896.98 et seq.).

To receive this incentive, submit the Certified DVBE Summary form under section 2-1.33.

Bidders other than the apparent low bidder, the 2nd low bidder, and the 3rd low bidder may be required to submit the Certified DVBE Summary form if the bid ranking changes. If the Department requests a Certified DVBE Summary form from you, submit the completed form within 4 business days of the request.

2-1.15C(3) Incentive Evaluation

The Department applies the small business and non–small business preference during bid verification and proceeds with the evaluation specified below for the DVBE incentive.

The DVBE incentive is a reduction, for bid comparison only, in the submitted total bid by the lesser of the following amounts:

1. Percentage of the DVBE achievement rounded to 2 decimal places of the verified total bid of the low bidder
2. 5 percent of the verified total bid of the low bidder
3. $250,000

The Department applies the DVBE incentive and determines whether the bid ranking changes.

A non–small business bidder cannot displace a small business bidder. However, a small business bidder with a higher DVBE achievement can displace another small business bidder.

The Department proceeds with awarding the contract to the new low bidder and posts the new verified bid results at the Department's website.

2-1.16–2-1.17 RESERVED

2-1.18 SMALL BUSINESS AND NON–SMALL BUSINESS SUBCONTRACTOR PREFERENCES

2-1.18A General

Section 2-1.18 applies to a non-federal-aid contract.

The Department applies small business preferences and non–small business preferences under Govt Code § 14835 et seq. and 2 CA Code of Regs § 1896 et seq.

Any contractor, subcontractor, supplier, or service provider who qualifies as a small business is encouraged to apply for certification as a small business by submitting its application to the Department of General Services, Office of Small Business and DVBE Services.

Contract award is based on the total bid, not the reduced bid.

2-1.18B Small Business Preference

The Department allows a bidder certified as a small business by the Department of General Services, Office of Small Business and DVBE Services, a preference if:

1. Bidder submitted a completed Request for Small Business Preference or Non–Small Business Preference form with its bid
2. Low bidder did not request the preference or is not certified as a small business

The Bidder's signature on the Request for Small Business Preference or Non–Small Business Preference form certifies that the Bidder is certified as a small business at the date and time of bid or has submitted a complete application to the Department of General Services. The complete application and any required substantiating documentation must be received by the Department of General Services by 5:00 p.m. on the bid opening date.

The Department of General Services determines whether a bidder was certified on the bid opening date. The Department of Transportation confirms the Bidder's status as a small business before applying the small business preference.

The small business preference is a reduction for bid comparison in the total bid submitted by the small business contractor by the lesser of the following amounts:

1. 5 percent of the verified total bid of the low bidder
2. $50,000

If the Department determines that a certified small business bidder is the low bidder after the application of the small business preference, the Department does not consider a request for non–small business preference.

2-1.18C Non–Small Business Subcontractor Preference

The Department allows a bidder not certified as a small business by the Department of General Services, Office of Small Business and DVBE Services, a preference if:

1. Bidder submitted a completed Request for Small Business Preference or Non–Small Business Preference form with its bid
2. Certified Small Business Listing for the Non–Small Business Preference form shows that you are subcontracting at least 25 percent to certified small businesses

Each listed subcontractor and supplier must be certified as a small business at the date and time of bid or must have submitted a complete application to the Department of General Services. The complete application and any required substantiating documentation must be received by the Department of General Services by 5:00 p.m. on the bid opening date.

The non–small business subcontractor preference is a reduction for bid comparison in the total bid submitted by the non–small business contractor requesting the preference by the lesser of the following amounts:

1. 5 percent of the verified total bid of the low bidder
2. $50,000

2-1.19–2-1.26 RESERVED

2-1.27 CALIFORNIA COMPANIES

Section 2-1.27 applies to a non-federal-aid contract.

Under Pub Cont Code § 6107, the Department gives preference to a *California company*, as defined, for bid comparison purposes over a nonresident contractor from any state that gives or requires a preference to be given to contractors from that state on its public entity construction contracts.

Complete a California Company Preference form.

The California company's reciprocal preference amount is equal to the preference amount applied by the state of the nonresident contractor with the lowest responsive bid unless the California company is eligible for a small business preference or a non–small business subcontractor preference, in which case the preference amount is the greater of the two, but not both.

If the low bidder is not a California company and a California company's bid with reciprocal preference is equal to or less than the lowest bid, the Department awards the contract to the California company on the basis of its total bid.

2-1.28–2-1.30 RESERVED

2-1.31 OPT OUT OF PAYMENT ADJUSTMENTS FOR PRICE INDEX FLUCTUATIONS

You may opt out of the payment adjustments for price index fluctuations specified in section 9-1.07. To opt out, submit a completed Opt Out of Payment Adjustments for Price Index Fluctuations form under section 2-1.33.

2-1.32 RESERVED

2-1.33 BID DOCUMENT COMPLETION AND SUBMITTAL

2-1.33A General

Complete the forms in the *Bid* book.

Use the forms provided by the Department except as otherwise specified for a bidder's bond.

Do not fax forms except for the copies of forms with the public works contractor registration number submitted after the time of bid. Fax these copies to (916) 227-6282.

Failure to submit the forms and information as specified may result in a nonresponsive bid.

If an agent other than the authorized corporate officer or a partnership member signs the bid, file a Power of Attorney with the Department either before opening bids or with the bid. Otherwise, the bid may be nonresponsive.

Complete and submit the *Bid* book under the *Electronic Bidding Guide* at the Department's Office of Construction Contract Awards.

Your authorized digital signature is your confirmation of and agreement to all certifications and statements contained in the *Bid* book.

On forms and certifications that you submit through the electronic bidding service, you agree that each form and certification where a signature is required is deemed as having your signature.

2-1.33B Bid Form Submittal Schedules

2-1.33B(1) General

The *Bid* book includes forms specific to the contract. The deadlines for the submittal of the forms vary depending on the requirements of each contract. Determine the requirements of the contract and submit the forms based on the applicable schedule specified in section 2-1.33B.

Bid forms and information on the form that are due after the time of bid may be submitted at the time of bid.

2-1.33B(2) Federal-Aid Contracts

2-1.33B(2)(a) General

Section 2-1.33B(2) applies to a federal-aid contract.

2-1.33B(2)(b) Contracts with a DBE Goal

2-1.33B(2)(b)(i) General

Section 2-1.33B(2)(b) applies if a DBE goal is shown on the *Notice to Bidders*.

2-1.33B(2)(b)(ii) Non-Informal-Bid Contract

For a non-informal-bid contract, submit the bid forms according to the schedule shown in the following table:

03-03-17

Bid Form Submittal Schedule for a
Non-Informal Bid Federal-Aid Contract with a DBE Goal

Form	Submittal deadline
Bid to the Department of Transportation	Time of bid except for the public works contractor registration number
Copy of the Bid to the Department of Transportation as submitted at the time of bid with the public works contractor registration number	10 days after bid opening
Subcontractor List	Time of bid except for the public works contractor registration number
Copy of the Subcontractor List as submitted at the time of bid with the public works contractor registration number	10 days after bid opening
Small Business Status	Time of bid
Opt Out of Payment Adjustments for Price Index Fluctuations[a]	Time of bid
DBE Commitment	No later than 4 p.m. on the 5th day after bid opening[b]
DBE Confirmation	No later than 4 p.m. on the 5th day after bid opening[b]
DBE Good Faith Efforts Documentation	No later than 4 p.m. on the 5th day after bid opening[b]

[a]Submit only if you choose the option.
[b]If the last day for submitting the bid form falls on a Saturday or holiday, it may be submitted on the next business day with the same effect as if it had been submitted on the day specified.

12-02-16

2-1.33B(2)(b)(iii) Informal-Bid Contract

For an informal-bid contract, submit the bid forms according to the schedule shown in the following table:

03-03-17

Bid Form Submittal Schedule for an
Informal-Bid Federal-Aid Contract with a DBE Goal

Form	Submittal deadline
Bid to the Department of Transportation	Time of bid
Subcontractor List	Time of bid
Small Business Status	Time of bid
Opt Out of Payment Adjustments for Price Index Fluctuations[a]	Time of bid
DBE Commitment	No later than 4 p.m. on the 5th day after bid opening[b]
DBE Confirmation	No later than 4 p.m. on the 5th day after bid opening[b]
DBE Good Faith Efforts Documentation	No later than 4 p.m. on the 5th day after bid opening[b]

[a]Submit only if you choose the option.
[b]If the last day for submitting the bid form falls on a Saturday or holiday, it may be submitted on the next business day with the same effect as if it had been submitted on the day specified.

12-02-16

2-1.33B(2)(c) Contracts without a DBE Goal

2-1.33B(2)(c)(i) General

Section 2-1.33B(2)(c) applies if a DBE goal is not shown on the *Notice to Bidders*.

2-1.33B(2)(c)(ii) Non-Informal-Bid Contract

For a non-informal-bid contract, submit the bid forms according to the schedule shown in the following table:

Bid Form Submittal Schedule for a Non-Informal-Bid Federal-Aid Contract without a DBE Goal

Form	Submittal deadline
Bid to the Department of Transportation	Time of bid except for the public works contractor registration number
Copy of the Bid to the Department of Transportation as submitted at the time of bid with the public works contractor registration number	10 days after bid opening
Subcontractor List	Time of bid except for the public works contractor registration number
Copy of the Subcontractor List as submitted at the time of bid with the public works contractor registration numbers	10 days after bid opening
Small Business Status	Time of bid
Opt Out of Payment Adjustments for Price Index Fluctuations[a]	Time of bid

[a]Submit only if you choose the option.

2-1.33B(2)(c)(iii) Informal-Bid Contract

For an informal-bid contract, submit the bid forms according to the schedule shown in the following table:

Bid Form Submittal Schedule for an Informal-Bid Federal-Aid Contract without a DBE Goal

Form	Submittal deadline
Bid to the Department of Transportation	Time of bid
Subcontractor List	Time of bid
Small Business Status	Time of bid
Opt Out of Payment Adjustments for Price Index Fluctuations[a]	Time of bid

[a]Submit only if you choose the option.

2-1.33B(2)(d)–2-1.33B(2)(h) Reserved

2-1.33B(3) Non-Federal-Aid Contracts

2-1.33B(3)(a) General

Section 2-1.33B(3) applies to non-federal-aid contracts.

2-1.33B(3)(b) Contracts with a DVBE Goal

2-1.33B(3)(b)(i) General

Section 2-1.33B(3)(b) applies if a DVBE goal is shown on the *Notice to Bidders*.

2-1.33B(3)(b)(ii) Non-Informal-Bid Contract

For a non-informal-bid contract, submit the bid forms according to the schedule shown in the following table:

Bid Form Submittal Schedule for a
Non-Informal-Bid Non-Federal-Aid Contract with a DVBE Goal

Form	Submittal deadline
Bid to the Department of Transportation	Time of bid except for the public works contractor registration number for a joint-venture contract
For a joint-venture contract, copy of the Bid to the Department of Transportation as submitted at the time of bid with the public works contractor registration number	10 days after bid opening
Subcontractor List	Time of bid
Opt Out of Payment Adjustments for Price Index Fluctuations[a]	Time of bid
Certified DVBE Summary	No later than 4 p.m. on the 4th business day after bid opening
California Company Preference	Time of bid
Request for Small Business Preference or Non–Small Business Preference[a]	Time of bid
Certified Small Business Listing for the Non–Small Business Preference[a]	No later than 4 p.m. on the 2nd business day after bid opening

[a]Submit only if you choose the option or preference.

2-1.33B(3)(b)(iii) Informal-Bid Contract

For an informal-bid contract, submit the bid forms according to the schedule shown in the following table:

Bid Form Submittal Schedule for an
Informal-Bid Non-Federal-Aid Contract with a DVBE Goal

Form	Submittal deadline
Bid to the Department of Transportation	Time of bid
Subcontractor List	Time of bid
Opt Out of Payment Adjustments for Price Index Fluctuations[a]	Time of bid
Certified DVBE Summary	Time of bid
California Company Preference	Time of bid
Request for Small Business Preference or Non–Small Business Preference[a]	Time of bid
Certified Small Business Listing for the Non–Small Business Preference[a]	Time of bid

[a]Submit only if you choose the option or preference.

2-1.33B(3)(c) Contracts without a DVBE Goal

2-1.33B(3)(c)(i) General

Section 2-1.33B(3)(c) applies if a DVBE goal is not shown on the *Notice to Bidders*.

2-1.33B(3)(c)(ii) Non-Informal-Bid Contract

For a non-informal-bid contract, submit the bid forms according to the schedule shown in the following table:

Bid Form Submittal Schedule for a
Non-Informal-Bid Non-Federal-Aid Contract without a DVBE Goal

Form	Submittal deadline
Bid to the Department of Transportation	Time of bid except for the public works contractor registration number for a joint-venture contract
For a joint-venture contract, copy of the Bid to the Department of Transportation as submitted at the time of bid with the public works contractor registration number	10 days after bid opening
Subcontractor List	Time of bid
Opt Out of Payment Adjustments for Price Index Fluctuations[a]	Time of bid
California Company Preference	Time of bid
Certified DVBE Summary[b]	No later than 4 p.m. on the 4th business day after bid opening
Request for Small Business Preference or Non–Small Business Preference[a]	Time of bid
Certified Small Business Listing for the Non–Small Business Preference[a]	No later than 4 p.m. on the 2nd business day after bid opening

[a]Submit only if you choose the option or preference.
[b]Submit only if you obtain DVBE participation or you are the apparent low bidder, 2nd low bidder, or 3rd low bidder and you choose to receive the specified incentive.

2-1.33B(3)(c)(iii) Informal-Bid Contract

For an informal-bid contract, submit the bid forms according to the schedule shown in the following table:

Bid Form Submittal Schedule for an
Informal-Bid Non-Federal-Aid Contract without a DVBE Goal

Form	Submittal deadline
Bid to the Department of Transportation	Time of bid
Subcontractor List	Time of bid
Opt Out of Payment Adjustments for Price Index Fluctuations[a]	Time of bid
Certified DVBE Summary[b]	Time of bid
Request for Small Business Preference or Non–Small Business Preference[a]	Time of bid
Certified Small Business Listing for the Non–Small Business Preference[a]	Time of bid

[a]Submit only if you choose the option or preference.
[b]Submit only if you obtain DVBE participation or you are the apparent low bidder, 2nd low bidder, or 3rd low bidder and you choose to receive the specified incentive.

2-1.33B(3)(d)–2-1.33B(3)(h) Reserved

2-1.33B(4)–2-1.33B(9) Reserved

2-1.34 BIDDER'S SECURITY

Submit one of the following forms of bidder's security equal to at least 10 percent of the bid:

1. Cash
2. Cashier's check
3. Certified check
4. Signed bidder's bond by an admitted surety insurer
5. Electronic bidder's bond by an admitted surety insurer submitted using an electronic registry service approved by the Department

Submit cash, cashier’s check, certified check, or bidder's bond to the Department's Office of Construction Contract Awards before the bid opening time.

Submit an electronic bidder's bond with the electronic bid.

If using a bidder's bond, you may use the form in the *Bid* book. If you do not use the form in the *Bid* book, use a form containing the same information.

2-1.35–2-1.39 RESERVED

2-1.40 BID WITHDRAWAL

Bids are not filed with the Department until the date and time of bid opening.

A bidder may withdraw or revise a bid after it has been submitted to the electronic bidding service if this is done before the bid opening date and time.

2-1.41–2-1.42 RESERVED

2-1.43 BID OPENING

The Department publicly opens and reads bids at the time and place shown on the *Notice to Bidders*.

2-1.44–2-1.45 RESERVED

2-1.46 DEPARTMENT'S DECISION ON A BID

The Department's decision on the bid amount is final.

The Department may reject:

1. All bids
2. A nonresponsive bid

07-21-17

3. A bid from any entity that is a parent, affiliate, or subsidiary, or that is under common ownership, control, or management with any other entity submitting a bid on the project

12-02-16

2-1.47 BID RELIEF

The Department may grant bid relief under Pub Cont Code § 5100 et seq. Submit any request for bid relief to the Office Engineer. The Relief of Bid Request form is available at the Department's website.

2-1.48 RESERVED

2-1.49 SUBMITTAL FAILURE HISTORY

The Department considers a bidder's past failure to submit documents required after bid opening in determining a bidder's responsibility.

2-1.50 BID RIGGING

Section 2-1.50 applies to a federal-aid contract.

The US Department of Transportation (DOT) provides a toll-free hotline to report bid rigging activities. Use the hotline to report bid rigging, bidder collusion, and other fraudulent activities. The hotline number is (800) 424-9071. The service is available 24 hours 7 days a week and is confidential and anonymous. The hotline is part of the DOT's effort to identify and investigate highway construction contract fraud and abuse and is operated under the direction of the DOT Inspector General.

^^

5 CONTROL OF WORK

04-20-18

Replace section 5-1.12 with:

01-20-17

5-1.12 ASSIGNMENT

The performance of the Contract or any Contract part may be assigned only with prior written consent from the Department. To request consent, submit a Contractor Action Request - Assignment of Contract

Performance form. The Department does not consent to any requested assignment that would relieve you or your surety of the responsibility to complete the work or any part of the work.

If you assign the right to receive Contract payments, the Department accepts the assignment upon the Engineer's receipt of a Contractor Action Request - Assignment of Contract Monies, Assignee Change of Name/Address form. Assigned payments remain subject to deductions and withholds described in the Contract. The Department may use withheld payments for work completion whether the payments are assigned or not.

Add to section 5-1.13B:

07-21-17

5-1.13B(3) Use of Joint Checks

You may use a joint check between the Contractor or lower-tier subcontractor and a DBE subcontractor purchasing materials from a material supplier if you obtain prior approval from the Department for your proposed use of joint checks upon submittal of a DBE Joint Check Agreement Request form.

To use a joint check, the following conditions must be met:

1. All parties, including the Contractor, must agree to the use of a joint check
2. Entity issuing the joint check acts solely to guarantee payment
3. DBE must release the check to the material supplier
4. Department must authorize the request before implementation
5. Any party to the agreement must provide requested documentation within 10 days of the Department's request for the documentation
6. Agreement to use a joint check must be short-term, not to exceed 1 year, allowing sufficient time needed to establish or increase a credit line with the material supplier

A request for a joint check agreement may be initiated by any party.

If a joint check is used, the DBE remains responsible for all elements of 49 CFR 26.55(c)(1).

Failure to comply with section 5-1.13B(3) disqualifies DBE participation and results in no credit and no payment to the Contractor for DBE participation.

A joint check may not be used between the Contractor or subcontractor and a DBE regular dealer, bulk material supplier, manufacturer, wholesaler, broker, trucker, packager, manufacturer’s representative, or other persons who arrange or expedite transactions.

Replace section 5-1.20E with:

04-20-18

5-1.20E Water Meter Charges

Reserved

01-20-17

Delete item 1 in the list in the paragraph of section 5-1.23C.

Replace section 5-1.36 with:

01-20-17

5-1.36 PROPERTY AND FACILITY PRESERVATION

5-1.36A General

Preserve and protect:

1. Highway improvements and facilities
2 Adjacent property

3. Waterways
4. ESAs
5. Lands administered by other agencies
6. Railroads and railroad equipment
7. Nonhighway facilities, including utilities
8. Survey monuments
9. Department's instrumentation
10 Temporary work
11. Roadside vegetation not to be removed

Comply with Govt Code § 4216 et seq. Notify the Engineer at least 3 business days before you contact the regional notification center. Failure to contact the notification center prohibits excavation.

Immediately report damage to the Engineer.

If you cause damage, you are responsible.

The Department may make a temporary repair to restore service to a damaged facility.

Install suitable safeguards to preserve and protect facilities from damage.

Install temporary facilities, such as sheet piling, cribbing, bulkheads, shores, or other supports, necessary to support existing facilities or to support material carrying the facilities.

5-1.36B Railroad Property

If working on or adjacent to railroad property, do not interfere with railroad operations.

For an excavation on or affecting railroad property, submit work plans showing the system to be used to protect the railroad facilities. Instead of the 15 days specified in section 5-1.23B, allow 65 days for the review of the plans.

If the Contract does not include an agreement with a railroad company, do not allow personnel or equipment on railroad property.

Prevent material, equipment, and debris from falling onto railroad property.

5-1.36C Nonhighway Facilities

5-1.36C(1) General

Before starting work that could damage or interfere with underground infrastructure, locate the infrastructure described in the Contract, including laterals and other appurtenances, and determine the presence of other underground infrastructure inferred from visible facilities, such as buildings, meters, and junction boxes.

Underground infrastructure described in the Contract may be in different locations from those described, and additional infrastructure may exist.

Upon discovering an underground main or trunk line not described in the Contract, immediately notify the Engineer and the infrastructure owner. The Engineer orders the locating and protecting of the infrastructure. The locating and protecting is change order work. If ordered, repair infrastructure damage. If the damage is not due to your negligence, the repair is change order work.

Immediately notify the Engineer of a delay due to the presence of main-line underground infrastructure not described in the Contract or in a substantially different location.

Notify the Engineer if the infrastructure described in the Contract cannot be found. If after giving the notice, you find the infrastructure in a substantially different location from that described, finding the infrastructure is change order work.

5-1.36C(2) Nonhighway Facility Protection

Reserved

5-1.36C(3) Nonhighway Facility Rearrangement

The Department may rearrange a nonhighway facility during the Contract. Rearrangement of a nonhighway facility includes installation, relocation, alteration, or removal of the facility.

The Department may authorize facility owners and their agents to enter the highway to perform rearrangement work for their facilities or to make connections or repairs to their property. Coordinate activities to avoid delays.

If necessary rearrangement of underground infrastructure is not described in the Contract, the Engineer may order you to perform the work. The rearrangement is change order work.

Immediately notify the Engineer of a delay due to a rearrangement different from that described in the Contract.

If you want infrastructure rearrangement different from that described in the Contract:

1. Notify the Engineer
2. Make an arrangement with the infrastructure owner
3. Obtain authorization for the rearrangement
4. Pay the infrastructure owner any additional cost

The Department does not adjust time or payment for a rearrangement different from that described the Contract.

5-1.36D Survey Monuments

Protect survey monuments on and off the highway. Upon discovery of a survey monument not identified and located by the Department, immediately:

1. Stop work near the monument
2. Notify the Engineer

Do not resume work near the monument until authorized.

5-1.36E Landscape

If you damage plants not to be removed:

1. Dispose of them unless the Engineer authorizes you to reduce them to chips and spread the chips within the highway at locations designated by the Engineer
2. Replace them

Replace plants with plants of the same species.

Replace trees with 24-inch-box trees.

Replace shrubs with no. 15-container shrubs.

Replace ground cover plants with plants from flats. Replace *Carpobrotus* ground cover plants with plants from cuttings. Plant ground cover plants 1 foot on center.

If a plant establishment or permanent erosion control establishment period is specified, replace plants before the start of the plant establishment or permanent erosion control establishment period; otherwise, replace plants at least 30 days before Contract acceptance.

Water each plant immediately after planting. Saturate the backfill soil around and below the roots or the ball of earth around the roots of each plant. Water as necessary to maintain plants in a healthy condition until Contract acceptance.

5-1.36F Irrigation Facilities

Keep existing irrigation facilities in place that are described to be removed, relocated, or modified until the Engineer determines they are no longer needed.

Maintain the existing water supply. If the existing water supply is interrupted for more than 3 consecutive days, provide an alternative water supply. Water the existing plants in the area irrigated from that water supply, including those maintained by the Department, as necessary to maintain healthy plant growth.

If you and the Department irrigate existing plants from the same water supply, furnish enough water to the Department for watering plantings on and off the highway as necessary to maintain a healthy condition through Contract acceptance.

If you damage irrigation facilities not to be removed:

1. Remove and dispose of them.
2. Repair and replace damaged facilities within 10 days.
3. Use similar commercial-quality components from the same manufacturer or components that are compatible with the existing irrigation system if authorized.
4. After completing the repair or replacement of the facilities, perform an operational test in the presence of the Engineer. If you repair or replace the remote control valves, conduct the test with the irrigation controller in the automatic mode.

Notify the Engineer:

1. At least 4 business days before shutting off the water supply to any portion of the existing irrigation system
2. Immediately after restoring the water supply to any portion of the existing irrigation system

Add to the end of the 1st paragraph of section 5-1.39C(1):

01-20-17

or permanent erosion control establishment

Replace section 5-1.43E with:

01-20-17

5-1.43E Alternative Dispute Resolution

5-1.43E(1) General

5-1.43E(1)(a) General

Section 5-1.43E applies to a contract with 100 or more original working days.

The ADR process must be used for the timely resolution of disputes that arise out of the work.

You must comply with section 5-1.43E to pursue a claim, file for arbitration, or file for litigation.

The ADR process is not a substitute for submitting an RFI or a potential claim record.

Do not use the ADR process for disputes between you and subcontractors or suppliers that have no grounds for a legal action against the Department. If you fail to comply with section 5-1.43 for a potential claim on behalf of a subcontractor or supplier, you release the Department of the subcontractor's or supplier's potential claim.

Do not use the ADR process for quantification of disputes for overhead expenses or costs. For a dispute for overhead expenses or costs, comply with section 9-1.17D.

Each party and the DRA or DRB must complete the Dispute Resolution Advisor Agreement form or Dispute Resolution Board Agreement form and comply with the provisions of the agreement. For these forms, go to the Department's Division of Construction website.

No DRA- or DRB-related meetings are allowed until each party and the DRA or DRB, execute the agreement. However, each party and the DRA or DRB, may agree to sign and execute the agreement at the 1st meeting.

5-1.43E(1)(b) Definitions

dispute meeting: Traditional and informal dispute meeting.

DRA: 1-member board established by the parties to assist in resolving disputes.

DRB: 3-member board established by the parties to assist in resolving disputes.

party: You or the Department.

1. **the parties:** You and the Department jointly.
2. **each party:** You and the Department severally.

outside technical services: Consultants with no prior direct involvement in the Contract.

5-1.43E(1)(c) Establishment of Procedures

Upon selecting the DRA or DRB, the parties must meet with the DRA or DRB to establish and agree to procedures for:

1. Submitting documents
2. Conducting hearings
3. Providing recommendations
4. Associated tasks

The established procedures must comply with the Contract and the Dispute Resolution Advisor Agreement or Dispute Resolution Board Agreement. The procedures need not comply with laws of evidence.

5-1.43E(1)(d) Progress Meetings

The parties must periodically meet with the DRA or DRB at the job site so the DRA or DRB members can keep abreast of construction activities and become familiar with the work in progress.

The meetings must be held at the start of job site activities and at least once every 3 months after that.

The parties must attend each meeting.

The parties may agree to waive the scheduled meetings when the only work remaining is plant establishment work or permanent erosion control establishment work.

5-1.43E(1)(e) Dispute Meetings

You must follow the traditional dispute meeting process to pursue a potential claim.

Either party may refer a dispute to the DRA or DRB. To request a dispute meeting, a party must submit a copy of the referral and supporting documentation to the DRA or DRB. The documentation must describe the dispute in individual discrete segments such that resolved and unresolved segments are differentiated. The party must include an estimate of the cost of the affected work and impacts to the work completion date.

A copy of all documents submitted to the DRA or DRB must be simultaneously submitted to the other party.

The Department furnishes the DRA or DRB with the Contract documents and provides meeting facilities at no cost to you.

Neither party may meet with or discuss Contract issues with the DRA or DRB members unless the other party is present.

If the dispute involves a subcontractor, the subcontractor's superintendent or project manager must attend the meeting.

Only the following persons are allowed to participate and present information at the meeting:

1. Engineer
2. Department's area construction engineer

3. Department's structure representative.
4. Your superintendent
5. Your project manager
6. Either party's employees that have direct knowledge of the dispute and direct involvement in the project
7. Consultants directly involved in the development of the estimate or construction
8. Subcontractor's superintendent or project manager if the dispute involves a subcontractor

The following persons are not allowed to attend the meeting:

1. Attorneys
2. Claim consultants
3. Outside technical services not employed by either party unless requested by the DRA or DRB

If the DRA or DRB needs outside technical services to help the DRA or DRB make a recommendation, the parties must agree to the services before they are provided. If the parties and the DRA or DRB agree, the technical services may be provided by technical staff who works for either party.

During a dispute meeting, each party presents its position, makes rebuttals, furnishes relevant documents, and responds to DRA or DRB questions and requests. The following is not allowed:

1. Testimony under oath
2. Cross-examination
3. Reporting of the procedures by a shorthand reporter or by electronic means

If either party fails to attend a dispute meeting, all documents submitted by the nonattending party is considered as the nonattending party's entire position, and the DRA or DRB and the attending party may proceed with the dispute process.

5-1.43E(1)(f) Informal Dispute Meetings

The parties may resolve small and uncomplicated disputes using an informal process. The parties may use this process only if the parties and the DRA or DRB agree its use is appropriate for resolving the dispute.

The informal dispute meeting process is independent from the traditional process. The Department does not grant time extensions for the traditional dispute process if the informal dispute process is used.

Each party furnishes the DRA or DRB a 1-page brief description of the dispute with supporting documentation and any additional information requested by the DRA or DRB.

In an informal dispute meeting, each party presents its position and receives the DRA's or DRB's recommendation orally on the same day the dispute is heard. The DRA or DRB furnishes a 1-page report confirming the recommendation within 5 business days.

Either party may ask for clarification of the DRA's or DRB's recommendation at the dispute meeting.

If the dispute remains unresolved, the parties must notify the DRA or DRB within 5 business days after receipt of the DRA's or DRB's written confirmation of the recommendation.

The DRA or DRB will not be bound by its informal recommendation if a dispute is later heard in a traditional dispute meeting.

If the dispute is not resolved using the informal dispute meeting process, the parties must comply with the traditional dispute meeting specifications.

5-1.43E(1)(g) Recommendations

Recommendations resulting from the ADR process are nonbinding.

If the parties resolve the dispute with the aid of the DRA's or DRB's recommendation, the parties must implement the resolution.

5-1.43E(1)(h) Completion of Alternative Dispute Resolution

All ADR activities must be completed before Contract acceptance. Accelerated timeframes may be used if the parties and the DRA or DRB agree.

If a dispute becomes an unresolved claim after Contract acceptance, comply with section 9-1.17D(2).

Neither party may call the DRA or DRB members who served on the Contract as a witness in arbitration or other proceedings that may arise from the Contract.

The parties must indemnify and hold harmless the DRA or DRB members from and against all claims, damages, losses, and expenses, including attorney's fees, arising out of and resulting from the findings and recommendations of the DRA or DRB.

5-1.43E(1)(i) Payment

Pay the DRA or each DRB member $2,000 per day for the DRA's or DRB's participation at each on-site meeting except if the DRA or a DRB member serves on more than 1 Department DRA or DRB, the $2,000 must be divided evenly among the contracts.

On-site meetings include:

1. Initial project meeting
2. Progress meetings
3. Dispute meetings

The payment includes full compensation for on-site time, travel expenses, transportation, lodging, travel time, and incidentals for each day or portion thereof the DRA or DRB member is at a DRA or DRB meeting.

Before a DRA or DRB member spends any time reviewing the plans or specifications, evaluating positions, preparing recommendations, completing forms, or performs any other off-site DRA- or DRB-related tasks, the parties must agree to pay for the tasks. Pay the DRA or DRB member $200 per hour for these tasks. This payment includes full compensation for incidentals such as expenses for telephone, fax, and computer services.

The Department reimburses you for 1/2 of the invoiced costs to the DRA or DRB and 1/2 of the costs of any outside technical services. Submit a change order bill and associated invoices with the original supporting documents in the form of a canceled check or bank statement to receive reimbursement. Do not add mark-ups to the change order bill.

The Department does not pay for (1) any DRA- or DRB-related work performed after Contract acceptance or (2) your cost of preparing for or attending ADR resolution meetings.

5-1.43E(2) Dispute Resolution Advisor

5-1.43E(2)(a) General

Section 5-1.43E(2) applies to a contract with a total bid from $3 million to $10 million.

5-1.43E(2)(b) DRA Selection

Within 30 days after Contract approval, the parties must select the DRA using the following procedure:

1. Each party nominates 3 DRA member candidates. Each candidate must be (1) on the Department's Dispute Resolution Advisor Candidates List at the Department's Division of Construction website or (2) must:
   - 1.1. Be knowledgeable in the type of construction and contract documents anticipated by the Contract
   - 1.2. Have completed training by the Dispute Resolution Board Foundation
   - 1.3. Have served on at least 3 dispute resolution boards on a Department contract as a member or at least 2 dispute resolution boards on a Department contract as the chairman
   - 1.4. Have no prior direct involvement on the Contract
   - 1.5. Have no financial interest in the Contract or with the parties, subcontractors, suppliers, consultants, or associated legal or business services within 6 months before award and during the Contract except for payments for Department DRA or DRB services or payments for

retirement or pensions from either party not tied to, dependent on, or affected by the net worth of the party

2. The parties must request a disclosure statement from each nominated DRA candidate and must furnish them to the other party. Each statement must include:
   - 2.1. Resume of the candidate's experience
   - 2.2. Declaration statement that describes past, present, anticipated, and planned professional or personal relationships with each of the following:
     - 2.2.1. Each party involved in the Contract
     - 2.2.2. Each parties' principals
     - 2.2.3. Each parties' counsel
     - 2.2.4. Associated subcontractors and suppliers
3. The parties must select 1 of the 6 candidates to be the DRA. If the parties cannot agree on 1 candidate, each party must select 1 of the 3 nominated by the other and the DRA is decided between the 2 candidates by a coin toss.

5-1.43E(2)(c) DRA Replacement

The services of the DRA may end at any time with a notice of at least 15 days if either of the following occurs:

1. DRA resigns.
2. Either party replaces the DRA for failing to comply with the required employment or financial disclosure conditions of the DRA as described in the Contract and the Dispute Resolution Advisor Agreement.

A DRA replacement is selected the same way as the original DRA. The selection of a replacement DRA must start upon determination of the need for a replacement and must be completed within 15 days. The Dispute Resolution Advisor Agreement must be amended to reflect the change of the DRA.

5-1.43E(2)(d) DRA Traditional Dispute Meeting

If you choose to pursue a potential claim, refer the dispute to the DRA within 5 business days after receiving the Engineer's response to your Supplemental Potential Claim Record. The dispute meeting must be held no later than 25 days after the DRA receives the referral unless the parties otherwise agree.

At least 10 days before the scheduled dispute meeting, each party must furnish the DRA documentation that supports its position and any additional information requested by the DRA.

If the DRA requests additional information within 5 business days after the dispute meeting, the party receiving the request must furnish this information within 5 business days after receiving the request.

The DRA furnishes a written recommendation within 10 days after the dispute meeting unless the parties agree to allow more time.

Within 5 business days after receiving the DRA's recommendation, either party may request clarification of any part of the recommendation. Only 1 request for clarification from each party is allowed per dispute.

Within 10 days after receiving the DRA's recommendation, each party must furnish a written response to the DRA indicating acceptance or rejection of the recommendation. If a party rejects the recommendation and has new information that supports its position, the party may request reconsideration. The reconsideration request must be made within 10 days after receiving the DRA’s recommendation. Only 1 reconsideration request from each party is allowed per dispute.

If the parties accept the DRA's recommendation but cannot agree on the time or payment adjustment within 30 days after accepting the recommendation, either party may request that the DRA recommend an adjustment.

5-1.43E(3) Dispute Resolution Board

5-1.43E(3)(a) General

Section 5-1.43E(3) applies to a contract with a total bid of over $10 million.

5-1.43E(3)(b) DRB Member Selection

Within 45 days after Contract approval, the parties must select DRB members and establish the DRB using the following procedure:

1. Each party nominates a DRB member candidate. Each candidate must be (1) on the Department's Dispute Resolution Candidates List at the Department's Division of Construction website or (2) must:
   1.1. Be knowledgeable in the type of construction and contract documents anticipated by the Contract
   1.2. Have completed training by the Dispute Resolution Board Foundation
   1.3. Have no prior direct involvement on the Contract
   1.4. Have no financial interest in the Contract or with the parties, subcontractors, suppliers, consultants, or associated legal or business services within 6 months before award and during the Contract except for payments for Department DRA or DRB services or payments for retirement or pensions from either party not tied to, dependent on, or affected by the net worth of the party
2. The parties must request a disclosure statement from each nominated DRB member candidate and must each furnish it to the other party. Each statement must include:
   2.1. Resume of the candidate's experience
   2.2. Declaration statement that describes past, present, anticipated, and planned professional or personal relationships with each of the following:
      2.2.1. Each party involved in the Contract
      2.2.2. Each parties' principals
      2.2.3. Each parties' counsel
      2.2.4. Associated subcontractors and suppliers
3. The parties are allowed:
   3.1. One-time objection to the other's candidate without stating a reason
   3.2. Objection to any of the other's subsequent candidates based on a specific breach of the candidate's responsibilities or qualifications under items 1 and 2 above
4. If either party objects to the other's candidate, the party whose candidate was objected to must nominate another DRB candidate within 15 days.
5. The 1st candidate from a party that receives no objection becomes that party's DRB member.
6. Each party furnishes written notification to the selected DRB member.
7. Within 15 days after their notifications, the selected DRB members recommend to the parties the 3rd DRB member candidate and furnish that candidate's disclosure statement.
8. Within 15 days after the recommendation, each party must notify the first 2 DRB members whether the party approves or disapproves of the recommended 3rd DRB member candidate.
9. If the 2 DRB members cannot agree on the 3rd DRB candidate, they will submit a list of candidates to the parties for the final selection and approval.
10. If (1) the 2 DRB members do not recommend a 3rd DRB candidate within 15 days of notification of their selections, (2) the parties do not agree on the 3rd DRB member candidate within 15 days after the recommendation, or (3) the parties do not agree on any of the candidates on the list furnished by the first 2 selected DRB members, each party must select 3 candidates from the current list of arbitrators certified by the Public Works Contract Arbitration Committee established by Pub Cont Code § 10245 et seq. who will be willing to serve as a DRB member. The first 2 selected DRB members must select the 3rd member in a blind draw of these 6 candidates.
11. The 3 DRB members then decide which of the 3 will act as the DRB chairman. If the parties do not agree with the selected chairman, the 3rd member will act as the DRB chairman.

5-1.43E(3)(c) DRB Member Replacement

The services of a DRB member may end at any time with a notice of at least 15 days if any of the following occurs:

1. A member resigns
2. The Department replaces its selected member
3. You replace your selected member
4. The Department's and your selected members replace the 3rd member
5. Either party replaces any member for failing to comply with the required employment or financial disclosure conditions of the DRB membership as described in the Contract and in the Dispute Resolution Board Agreement.

Replacing any DRB member must be accomplished by written notification to the DRB and the other party with substantiation for replacing the member.

A replacement DRB member is selected the same way as the original DRB member. The selection of a replacement DRB member must start upon determination of the need for a replacement and must be completed within 15 days. The Dispute Resolution Board Agreement must be amended to reflect the change to the DRB.

5-1.43E(3)(d) DRB Traditional Dispute Meeting

If you choose to pursue a potential claim, refer the dispute to the DRB within 21 days after receiving the Engineer's response to your Supplemental Potential Claim Record unless a facilitated dispute resolution is included in the signed original partnering charter, in which case, make the referral within 41 days after receiving the response. The dispute meeting must be held no sooner than 30 days and no later than 60 days after the DRB receives the referral unless the parties otherwise agree.

At least 15 days before the scheduled dispute meeting, each party must provide the DRB documentation that supports its position and any additional information requested by the DRB.

If the DRB requests additional information at the dispute meeting, the party receiving the request must provide this information within 10 days after receiving the request.

The DRB furnish a written recommendation report within 30 days after the dispute meeting unless the parties agree to allow more time.

Within 10 days after receiving the DRB's recommendation report, either party may request clarification of any part of the recommendation. Only 1 request for clarification from each party is allowed per dispute.

Within 30 days after receiving the DRB's recommendation, each party must furnish a written response to the DRB indicating acceptance or rejection of the recommendation. If a party rejects the recommendation, the party must include a list of specific reasons for the rejection. If a party has new information that supports its position, the party may request a reconsideration. The reconsideration request must be made within 30 days after receiving the DRB's recommendation. Only 1 request for reconsideration from each party is allowed per dispute.

If the parties accept the DRB's recommendation but cannot agree on the time or payment adjustment within 60 days after accepting the recommendation, either party may request that the DRB recommend an adjustment.

^^

6 CONTROL OF MATERIALS

07-21-17

Replace *METS website* in the last sentence in the last paragraph of section 6-2.01B with:

07-21-17

Authorized Facility Audit List website

Replace *METS website* in the last sentence in the last paragraph of section 6-2.01C with:

07-21-17

Authorized Material List website

Replace *METS website* in the last sentence in the last paragraph of section 6-2.01D with:

07-21-17

Authorized Material Source List website

^^

7 LEGAL RELATIONS AND RESPONSIBILITY TO THE PUBLIC

04-20-18

Replace the paragraphs in section 7-1.02I(2) with:

05-06-16

Under 2 CA Code of Regs § 11105:

1. During the performance of this contract, the recipient, contractor, and its subcontractors shall not deny the contract's benefits to any person on the basis of race, religious creed, color, national origin, ancestry, physical disability, mental disability, medical condition, genetic information, marital status, sex, gender, gender identity, gender expression, age, sexual orientation, or military and veteran status, nor shall they discriminate unlawfully against any employee or applicant for employment because of race, religious creed, color, national origin, ancestry, physical disability, mental disability, medical condition, genetic information, marital status, sex, gender, gender identity, gender expression, age, sexual orientation, or military and veteran status. Contractor shall insure that the evaluation and treatment of employees and applicants for employment are free of such discrimination.
2. Contractor shall comply with the provisions of the Fair Employment and Housing Act (Gov. Code, § 12900 et seq.), the regulations promulgated thereunder (Cal. Code Regs., tit. 2, § 11000 et seq.), the provisions of Article 9.5, Chapter 1, Part 1, Division 3, Title 2 of the Government Code (Gov. Code, §§ 11135-11139.5), and the regulations or standards adopted by the awarding state agency to implement such article.
3. Contractor or recipient shall permit access by representatives of the Department of Fair Employment and Housing and the awarding state agency upon reasonable notice at any time during the normal business hours, but in no case less than 24 hours' notice, to such of its books, records, accounts, and all other sources of information and its facilities as said Department or Agency shall require to ascertain compliance with this clause.
4. Recipient, contractor and its subcontractors shall give written notice of their obligations under this clause to labor organizations with which they have a collective bargaining or other agreement.
5. The contractor shall include the nondiscrimination and compliance provisions of this clause in all subcontracts to perform work under the contract.

Under 2 CA Code of Regs § 11122:

STANDARD CALIFORNIA NONDISCRIMINATION CONSTRUCTION CONTRACT SPECIFICATIONS (GOV. CODE SECTION 12990)

These specifications are applicable to all state contractors and subcontractors having a construction contract or subcontract of $5,000 or more.

1. As used in the specifications:
   a. "Act" means the Fair Employment and Housing Act.
   b. "Administrator" means Administrator, Office of Compliance Programs, California Department of Fair Employment and Housing, or any person to whom the Administrator delegates authority;
2. Whenever the contractor or any subcontractor subcontracts a portion of the work, it shall include in each subcontract of $5,000 or more the nondiscrimination clause in this contract directly or through incorporation by reference. Any subcontract for work involving a construction trade shall also include the Standard California Construction Contract Specifications, either directly or through incorporation by reference.
3. The contractor shall implement the specific nondiscrimination standards provided in paragraphs 6(a) through (e) of these specifications.
4. Neither the provisions of any collective bargaining agreement, nor the failure by a union with whom the contractor has a collective bargaining agreement, to refer members of any group protected by the Act shall excuse the contractor's obligations under these specifications, Government Code section 12990, or the regulations promulgated pursuant thereto.5. In order for the nonworking training hours of apprentices and trainees to be counted, such apprentices and trainees must be employed by the

contractor during the training period, and the contractor must have made a commitment to employ the apprentices and trainees at the completion of their training, subject to the availability of employment opportunities. Trainees must be trained pursuant to training programs approved by the U.S. Department of Labor or the California Department of Industrial Relations.

5. In order for the nonworking training hours of apprentices and trainees to be counted, such apprentices and trainees must be employed by the contractor during the training period, and the contractor must have made a commitment to employ the apprentices and trainees at the completion of their training, subject to the availability of employment opportunities. Trainees must be trained pursuant to training programs approved by the U.S. Department of Labor or the California Department of Industrial Relations.
6. The contractor shall take specific actions to implement its nondiscrimination program. The evaluation of the contractor's compliance with these specifications shall be based upon its effort to achieve maximum results from its actions. The contractor must be able to demonstrate fully its efforts under steps a. through e. below:
    a. Ensure and maintain a working environment free of harassment, intimidation, and coercion at all sites, and at all facilities at which the contractor's employees are assigned to work. The contractor shall specifically ensure that all foremen, superintendents, and other on-site supervisory personnel are aware of and carry out the contractor's obligations to maintain such a working environment.
    b. Provide written notification within seven days to the director of the DFEH when the referral process of the union or unions with which the contractor has a collective bargaining agreement has impeded the contractor's efforts to meet its obligations.
    c. Disseminate the contractor's equal employment opportunity policy by providing notice of the policy to unions and training, recruitment and outreach programs and requesting their cooperation in assisting the contractor to meet its obligations; and by posting the company policy on bulletin boards accessible to all employees at each location where construction work is performed.
    d. Ensure all personnel making management and employment decisions regarding hiring, assignment, layoff, termination, conditions of work, training, rates of pay or other employment decisions, including all supervisory personnel, superintendents, general foremen, on-site foremen, etc., are aware of the contractor's equal employment opportunity policy and obligations, and discharge their responsibilities accordingly.
    e. Ensure that seniority practices, job classifications, work assignments, and other personnel practices, do not have a discriminatory effect by continually monitoring all personnel and employment related activities to ensure that the equal employment opportunity policy and the contractor's obligations under these specifications are being carried out.
7. Contractors are encouraged to participate in voluntary associations that assist in fulfilling their equal employment opportunity obligations. The efforts of a contractor association, joint contractor-union, contractor-community, or other similar group of which the contractor is a member and participant, may be asserted as fulfilling any one or more of its obligations under these specifications provided that the contractor actively participates in the group, makes every effort to assure that the group has a positive impact on equal employment opportunity in the industry, ensures that the concrete benefits of the program are reflected in the contractor's workforce participation, and can provide access to documentation that demonstrates the effectiveness of actions taken on behalf of the contractor. The obligation to comply, however, is the contractor's.
8. The contractor is required to provide equal employment opportunity for all persons. Consequently, the contractor may be in violation of the Fair Employment and Housing Act (Government Code section 12990 et seq.) if a particular group is employed in a substantially disparate manner.
9. The contractor shall not use the nondiscrimination standards to discriminate against any person because race, religious creed, color, national origin, ancestry, physical disability, mental disability, medical condition, genetic information, marital status, sex, gender, gender identity, gender expression, age, sexual orientation, or military and veteran status.
10. The contractor shall not enter into any subcontract with any person or firm decertified from state contracts pursuant to Government Code section 12990.
11. The contractor shall carry out such sanctions and penalties for violation of these specifications and the nondiscrimination clause, including suspension, termination and cancellation of existing subcontracts as may be imposed or ordered pursuant to Government Code section 12990 and its implementing regulations by the awarding agency. Any contractor who fails to carry out such

sanctions and penalties shall be in violation of these specifications and Government Code section 12990.

12. The contractor shall designate a responsible official to monitor all employment related activity to ensure that the company equal employment opportunity policy is being carried out, to submit reports relating to the provisions hereof as may be required by OCP and to keep records. Records shall at least include for each employee the name, address, telephone numbers, construction trade, union affiliation if any, employee identification number when assigned, status, (e.g., mechanic, apprentice trainee, helper, or laborer), dates of changes in status, hours worked per week in the indicated trade, rate of pay, and locations at which the work was performed. Records shall be maintained in any easily understandable and retrievable form; however, to the degree that existing records satisfy this requirement, contractors shall not be required to maintain separate records.

Add to the end of the 2nd sentence in the 1st paragraph of section 7-1.02K(1):

04-22-16

, and hauling and delivery of ready-mixed concrete.

Add between the 4th and 5th paragraphs of section 7-1.02K(3):

04-22-16

Submitted certified payrolls for hauling and delivering ready-mixed concrete must be accompanied by a written time record. The time record must include:

1. Truck driver's full name and address
2. Name and address of the factory or batching plant
3. Time the concrete was loaded at the factory or batching plant
4. Time the truck returned to the factory or batching plant
5. Truck driver's signature certifying under penalty of perjury that the information contained in this written time record is true and correct

Add between the 1st and 2nd paragraphs of section 7-1.02K(6)(a)

04-20-18

You must contact the local public health service department for information concerning public health conditions within the area of the project.

Add to the end of section 7-1.02K(6)(a):

04-20-18

The Department is not responsible for the health and safety of:

1. Contractor's personnel
2. Subcontractor's personnel
3. Supplier's personnel
4. Any other persons present at the job site at the request of you or your subcontractors.

Replace item 3 in the list in the 3rd paragraph of section 7-1.02K(6)(j)(ii) with:

04-20-18

3. Sealed and signed by a CIH with knowledge of and experience complying with 8 CA Code of Regs

Add between the 9th and 10th paragraphs of section 7-1.03:

07-15-16

If a height differential of more than 0.04 foot is created by construction activities at a joint transverse to the direction of traffic on the traveled way or a shoulder subject to public traffic, construct a temporary taper at the joint with a slope complying with the requirements shown in the following table:

Temporary Tapers

Height differential (foot)	Slope (horizontal:vertical)	
	Taper use of 14 days or less	Taper use of more than 14 days
Greater than 0.08	100:1 or flatter	200:1 or flatter
0.04–0.08	70:1 or flatter	70:1 or flatter

For a taper on existing asphalt concrete or concrete pavement, construct the taper with minor HMA under section 39-2.07.

Grind existing surfaces to accommodate a minimum taper thickness of 0.10 foot under either of the following conditions:

1. HMA material such as rubberized HMA, polymer-modified bonded wearing course, or open-graded friction course is unsuitable for raking to a maximum 0.02 foot thickness at the edge
2. Taper will be in place for more than 14 days

For a taper on a bridge deck or approach slab, construct the taper with polyester concrete under section 60-3.04B.

The completed surface of the taper must be uniform and must not vary more than 0.02 foot from the lower edge of a 12-foot straightedge when placed on its surface parallel and perpendicular to traffic.

If authorized, you may use alternative materials or methods to construct the required taper.

Add to section 7-1.05:

04-20-18

7-1.05C Other

You are responsible to the fullest extent allowed by law, to defend and indemnify the State for any and all injury, illness, disease, or death arising out of or caused by an organism, including but not limited to animals, microscopic bacteria, fungi, plants and the like, to which persons, including but not limited to the public, any employees or agents of yours, the State, or any other contractors that are exposed in connection with the work on the project.

Replace *§ 337.15* in the 3rd item in the list in the paragraph of section 7-1.06B with:

05-06-16

§ 337.1

Add between the 1st and 2nd paragraphs of section 7-1.11A:

02-12-16

Comply with 46 CFR 381.7(a)–(b).

^^

8 PROSECUTION AND PROGRESS

01-20-17

Add between *establishment* and *are* in the introductory clause of the 3rd paragraph of section 8-1.10A:

01-20-17

or permanent erosion control establishment

Replace the table in the 3rd paragraph of section 8-1.10A with:

07-15-16

Liquidated Damages

Total bid		Liquidated damages per day
From over	To	
$0	$60,000	$1,400
$60,000	$200,000	$2,900
$200,000	$500,000	$3,200
$500,000	$1,000,000	$3,500
$1,000,000	$2,000,000	$4,000
$2,000,000	$5,000,000	$4,800
$5,000,000	$10,000,000	$6,800
$10,000,000	$20,000,000	$10,000
$20,000,000	$50,000,000	$13,500
$50,000,000	$100,000,000	$19,200
$100,000,000	$250,000,000	$25,300

Replace the 4th paragraph of section 8-1.10A with:

01-20-17

If all work except plant establishment or permanent erosion control establishment is complete and the total number of working days have expired, liquidated damages are $950 per day.

^^

9 PAYMENT

07-21-17

Replace the introductory clause in the 2nd paragraph of section 9-1.02B(3) with:

07-21-17

If imported topsoil, soil amendment, wood mulch, or compost is measured by volume:

Replace the 1st paragraph of section 9-1.11B with:

01-20-17

The TRO quantity does not include the number of working days to complete plant establishment or permanent erosion control establishment work.

Replace the 3rd and 4th paragraphs of section 9-1.11D with:

01-20-17

For a contract without plant establishment or permanent erosion control establishment work, the Department pays you the balance due for the TRO item total as specified in section 9-1.17B.

For a contract with plant establishment or permanent erosion control establishment work, the Department pays you the balance due for the TRO item total in the 1st progress payment after all non–plant establishment or non–permanent erosion control establishment work is completed.

Replace *may withhold* in the 1st paragraph of section 9-1.16E(4) with:

01-15-16

withholds

^^

DIVISION II GENERAL CONSTRUCTION

10 GENERAL

04-15-16

Replace section 10-1.02B with:

04-15-16

10-1.02B Traffic Elements

Before starting the operational test of a traffic management system that directly impacts traffic, the system must be ready for operation, and all signs, pavement delineation, and pavement markings must be in place at the system's location.

If maintaining existing traffic management system elements during construction is shown on the Bid Item List, a list of the systems shown within the project limits and their operational status is included in the *Information Handout*. Before starting job site activities, conduct a preconstruction operational status check of the existing system's elements and each element's communication status with the transportation management center to which it communicates. If an existing system element is discovered and has not been identified, the Department adds the element to the list of systems. The pre- and postconstruction operational status check of the discovered elements is change order work.

If maintaining existing traffic management system elements during construction is not shown on the Bid Item List and an existing system element is discovered during the work, notify the Engineer. The Engineer orders a pre- and postconstruction operational status check of the discovered elements. The status check of the discovered elements is change order work.

Conduct the status check with the Engineer and an electrical representative from the traffic operations office of the district in which the work is located. The Department provides you a list of the preconstruction operational status-check results, including:

1. Existing traffic management system elements and their locations within the project limits
2. Fully functioning elements
3. Nonoperational elements

Before Contract acceptance, conduct a postconstruction operational status check of all elements shown on the list with the Engineer and an electrical representative from the traffic operations office of the district in which the work is located.

Replace 10-3 of section 10 with:

04-15-16

10-2–10-3 RESERVED

^^^

12 TEMPORARY TRAFFIC CONTROL

04-20-18

Replace the 4th paragraph of section 12-3.02B with:

01-20-17

Retroreflective cone sleeves must be permanently affixed, double-band, sleeves consisting of 2 white retroreflective bands. The top band must be 6 inches wide and placed a maximum of 4 inches from the top of the cone. The lower band must be 4 inches wide and placed 2 inches below the bottom of the top band. You may use traffic cones with double-band retroreflective cone sleeves during daylight hours.

Replace section 12-3.32 with:

04-15-16

12-3.32 PORTABLE CHANGEABLE MESSAGE SIGNS

12-3.32A General

12-3.32A(1) Summary

Section 12-3.32A includes specifications for placing portable changeable message signs.

12-3.32A(2) Definitions

Reserved

12-3.32A(3) Submittals

If requested, submit a certificate of compliance for each PCMS.

Submit your cell phone number before starting the first activity that requires a PCMS.

12-3.32A(4) Quality Assurance

Reserved

12-3.32B Materials

Each PCMS must have a message board, controller unit, power supply, and a structural support system. The unit must be assembled to form a complete self-contained PCMS that can be delivered to the job site and placed into immediate operation. The sign unit must be capable of operating at an ambient air temperature from -4 to 158 degrees F and must be unaffected by mobile radio transmissions other than those required to control the PCMS.

A PCMS must be permanently mounted on a trailer, truck bed, or truck cab under the manufacturer's instructions. The PCMS must be securely mounted on the support vehicle such that it remains attached during any impact to the vehicle. If it is mounted on a trailer, the trailer must be capable of being leveled and plumbed.

A minimum of 3 feet of retroreflective material must be permanently affixed on all 4 sides of the trailer. The retroreflective material need not be continuous but must be visible on the same plane.

The sign panel must be capable of displaying a 3-line message with at least 7 characters per line. The characters must be at least 18 inches in height where the useable shoulder area is at least 15 feet wide. To prevent encroachment onto the traveled way where the useable shoulder area is less than 15 feet wide, you may use a smaller message panel with at least 12-inch-high characters.

The message displayed on the sign must be visible from a distance of 1,500 feet and legible from a distance of 750 feet at noon on a cloudless day and during the night by persons with 20/20 vision or vision corrected to 20/20.

The characters on a sign panel may be 10 inches in height if:

1. PCMS is mounted on a service patrol truck or other incident response vehicle or used for traffic control operations on a highway facility where the posted speed limit is less than 40 mph
2. Message is legible from a distance of at least 650 feet at noon on a cloudless day and during the night by persons with 20/20 vision or vision corrected to 20/20

A matrix sign must provide a complete alphanumeric selection.

A PCMS must automatically adjust its brightness under varying light conditions to maintain the legibility of the message. The sign must be equipped with an automatic-dimming mode that automatically compensates for the influence of temporary light sources or abnormal lighting conditions. The sign must have 3 or more manual dimming modes of different intensities.

During the hours of darkness, a matrix sign not using lamps must be either internally or externally illuminated.

The controller must be an all solid-state unit containing the necessary circuitry for the storage of at least 5 preprogrammed messages. The controller must be installed at a location that allows the operator to perform all functions from a single position. The controller must have a keyboard entry system that allows the operator to generate an infinite number of additional messages in addition to the preprogrammed stored messages. The keyboard must be equipped with a security lockout feature to prevent unauthorized use of the controller.

The controller must have:

1. Nonvolatile memory that stores keyboard-created messages during periods when the power is not activated
2. Variable display rate that allows the operator to match the information display to the speed of approaching traffic
3. Screen upon which messages may be reviewed before being displayed on the sign

The flashing-off time must be adjustable from within the control cabinet.

12-3.32C Construction

Place a PCMS as far from the traveled way as practicable where it is legible to approaching traffic without encroaching on the traveled way. Where the vertical roadway curvature restricts the sight distance of approaching traffic, place the sign on or before the crest of the curvature where it is most visible to the approaching traffic. Where the horizontal roadway curvature restricts the sight distance of approaching traffic, place the sign at or before the curve where it is most visible to approaching traffic. Where practicable, place the sign behind guardrail or Type K temporary railing.

Make a taper consisting of 9 traffic cones placed 25 feet apart to delineate the location of a PCMS except where the sign is placed behind guardrail or Type K temporary railing.

When in full operation, the bottom of a sign must be at least 7 feet above the roadway in areas where pedestrians are anticipated and 5 feet above the roadway elsewhere, and the top of the sign must be not more than 14.5 feet above the roadway.

Operate the PCMS under the manufacturer's instructions.

Keep the PCMS clean to provide maximum visibility.

If multiple signs are needed, place each sign on the same side of the road at least 1,000 feet apart on freeways and expressways and at least 500 feet apart on other types of highways.

If more than one PCMS is simultaneously visible to traffic, only 1 sign may display a sequential message at any time. Do not use dynamic message displays, such as animation, rapid flashing, dissolving, exploding, scrolling, horizontal movement, or vertical movement of messages. The message must be centered within each line of the display.

You may use an additional PCMS if more than 2 phases are needed to display a message.

Display only messages shown or ordered.

Repeat the entire message continuously in not more than 2 phases of at least 3 seconds per phase. The sum of the display times for both of the phases must be a maximum of 8 seconds. If more than 2 phases are needed to display a message, use an additional PCMS.

You must be available by cell phone during activities that require a sign. Be prepared to immediately change the displayed message if ordered. You may operate the sign with a 24-hour timer control or remote control if authorized.

After the initial placement, move a sign from location to location as ordered.

When a PCMS is not in use, move it to an area at least 15 feet from the edge of the traveled way or remove it from the job site away from traffic.

12-3.32D Payment

Not Used

Add to section 12-4.02A(2):

07-21-17

Construction Zone Enhanced Enforcement Program (COZEEP): Program that provides California Highway Patrol officers to monitor the movement of traffic within the work zone.

Add between the 1st sentence and 2nd sentences in the 1st paragraph of section 12-4.02A(3)(a):

07-15-16

For a project in District 7, submit the request at least 15 days before the proposed closure date.

Add to the end of section 12-4.02A(3)(a):

07-21-17

Submit a traffic break request using LCS to show the location and time of the requested traffic break.

Replace *unauthorized closures or* in the last paragraph of section 12-4.02A(3)(b) with:

07-21-17

authorized and unauthorized closures and

Add to section 12-4.02A(3):

07-21-17

12-4.02A(3)(d) Traffic Break Schedule

Every Monday by noon, submit a traffic break request for the next week. Support for a traffic break is based on local California Highway Patrol staffing levels and may not be available for the date or time requested.

Traffic break requests are limited to the hours when a shoulder or lane closure is allowed.

Cancel a traffic break request using LCS at least 48 hours before the start time of the traffic break.

The Department notifies you through LCS of authorized and unauthorized traffic breaks.

The Department does not adjust time or payment if (1) a California Highway Patrol officer is unavailable for the requested date or time or (2) your request is not authorized.

Replace section 12-4.02C(2) with:

01-15-16

12-4.02C(2) Lane Closure System

12-4.02C(2)(a) General

The Department provides LCS training. Request the LCS training at least 30 days before submitting the 1st closure request. The Department provides the training within 15 days after your request.

LCS training is web-based or held at a time and location agreed upon by you and the Engineer. For web-based training, the Engineer provides you the website address to access the training.

With 5 business days after completion of the training, the Department provides LCS accounts and user IDs to your assigned, trained representatives.

Each representative must maintain a unique password and current user information in the LCS.

04-15-16

The project is not accessible in LCS after Contract acceptance.

01-20-17

12-4.02C(2)(b) Status Updates for Authorized Closures

Update the status of authorized closures using the LCS Mobile web page.

For a stationary closure on a traffic lane, use code:

1. 10-97 immediately before you place the 1st cone on the traffic lane
2. 10-98 immediately after you remove all of the cones from the traffic lane

For a stationary closure on the shoulder, use code:

1. 10-97 immediately before you place the 1st cone after the last advance warning sign
2. 10-98 immediately after you remove the last cone before the advance warning signs

For a moving closure, use code:

1. 10-97 immediately before the actual start time of the closure
2. 10-98 immediately after the actual end time of the closure

For closures not needed on the authorized date, use code 10-22 within 2 hours after the authorized start time.

If you are unable to access the LCS Mobile web page, immediately notify the Engineer of the closure's status.

Add to the end of section 12-4.02C(7):

07-21-17

12-4.02C(7)(d) Traffic Breaks

You may request a traffic break for special operations, such as:

1. Installation, removal, or replacement of an overhead power line or other utility cable across the highway
2. Falsework adjustment
3. Installation or removal of traffic control devices in areas without a standard-width shoulder
4. Transportation of large equipment across the highway
5. Access to median areas for workers or equipment

If the Department authorizes the traffic break, the Engineer notifies you and arranges the traffic break with the California Highway Patrol through COZEEP. The duration of a traffic break must not exceed 5 minutes or as authorized.

Two California Highway Patrol officers per vehicle are required for traffic breaks occurring any time from 2200 to 0600 hours.

A minimum of 2 California Highway Patrol vehicles will be assigned to conduct a traffic break.

Place a PCMS approximately 2,000 feet upstream of the work area or as agreed upon by the Engineer. The PCMS must comply with section 12-3.32 except the PCMS must not be trailer mounted. Monitor the traffic during the traffic break. If a queue develops, reposition the PCMS truck far enough upstream of the traffic break to provide real-time notification to motorists before they approach the traffic queue.

Add to the end of section 12-4.02D:

07-21-17

The Department does not pay for furnishing, placing, relocating, and removing PCMSs used for a traffic break.

The Department deducts the full cost of COZEEP support provided for the traffic break.

The hourly rate for each California Highway Patrol officer providing COZEEP support is $115. This rate includes full compensation for each hour or portion thereof that the officer provides the support. Markups are not added to any expenses associated with COZEEP support.

The minimum number of hours for an officer is 4 hours, except if a closure is already in place and the Engineer authorizes your request for an on-duty officer to conduct a traffic break, the minimum number of hours for an officer is 1 hour.

For a cancellation less than 48 hours before the scheduled start time of COZEEP support, except for a cancellation due to adverse weather or extenuating circumstances, the Department deducts:

1. Minimum of $50 per California Highway Patrol officer if the officer is notified before the start time
2. Maximum of 4 hours of pay per officer if the officer is not notified before the start time

Replace section 12-4.04 with:

04-20-18

12-4.04 TEMPORARY PEDESTRIAN ACCESS ROUTES

12-4.04A General

12-4.04A(1) Summary

Section 12-4.04 includes specifications for providing, maintaining, and removing temporary pedestrian access routes.

A temporary pedestrian access route includes temporary traffic control devices as shown except for Type K temporary railing and temporary crash cushions.

12-4.04A(2) Definitions

Reserved

12-4.04A(3) Submittals

If work activities require the closure of a pedestrian route and a temporary pedestrian access route is not shown, submit a work plan for a temporary pedestrian access route. The work plan must:

1. Describe the activities, processes, equipment, and materials that will be used to provide the temporary access route
2. Show the locations of the routes and the placement of traffic control devices for each stage of work
3. Include a time-scaled logic diagram displaying the sequence and duration of the planned activities for each stage of work
4. Be sealed and signed by an engineer who is registered as a civil engineer in the State

Submit “Temporary Pedestrian Access Route Contractor Compliance Report,” within 2 business days after construction of a temporary pedestrian access route,

Submit “Temporary Pedestrian Access Route Contractor Weekly Report,” within 2 business days of completing a weekly inspection.

12-4.04A(4) Quality Assurance

12-4.04A(4)(a) General

Reserved

12-4.04A(4)(b) Quality Control

Perform a review of the temporary pedestrian access route after it is constructed and document compliance on the “Temporary Pedestrian Access Route Contractor Compliance Report.”

The Department will conduct a verification inspection after receiving the compliance report.

For a temporary pedestrian access route in use perform a weekly review and document compliance on the “Temporary Pedestrian Access Route Contractor Weekly Report.”

12-4.04B Materials

The walkway surface must be slip resistant and surfaced with minor HMA or commercial-quality, bituminous material, commercial-quality concrete, or wood.

A handrail with a circular cross section must have an outer diameter from 1-1/4 to 2 inches. A handrail with a noncircular cross section must have a perimeter from 4 to 6-1/4 inches and a maximum cross-section dimension of 2-1/4 inches.

Fasteners must be rounded to prevent injury to a pedestrian's fingers, hands, and arms and to eliminate sharp edges that could catch on clothing.

A detectable warning surface must be on the Authorized Material List for detectable warning surfaces and match yellow color no. 33538 of FED-STD-595.

Temporary traffic control devices used to channelize pedestrians must:

1. Be free of sharp or rough edges
2. Have a continuous detectable edging at least 6 inches high and at no more than 2 inches above the walkway surface
3. Be at least 32 inches in height
4. Have smooth connection points between devices to allow for a handrail
5. Have a top and bottom surface in the same vertical plane

12-4.04C Construction

Notify the Engineer 5 business days before closing an existing pedestrian route. Do not close the route until authorized.

If work activities require the closure of a pedestrian route and a temporary pedestrian access route is not shown, provide a temporary pedestrian access route near the traveled way. You may route pedestrians using the existing sidewalk or by constructing a temporary access route.

If a bid item for a temporary pedestrian access route is not shown on the Bid Item List, then constructing a temporary pedestrian access route is change order work except, when the closure is a result of your means and methods.

Construct a temporary pedestrian access route such that:

1. Walkway surface is firm and stable and free of irregularities
2. Cross slope of the pedestrian route is at most 50:1 (horizontal:vertical)
3. Longitudinal slope of the pedestrian route is at most 20:1 (horizontal:vertical)
4. Walkway, landings, blended transitions, and curb ramps are at least 60 inches wide except where not feasible, the width must be at least 48 inches wide with a 60-by-60-inch passing space at least every 200 feet

5. Lateral joints or gaps between surfaces are less than 1/2 inch wide
6. Discontinuities in surface heights are less than 1/2 inch and beveled if greater than 1/4 inch with a slope no greater than 2:1 (horizontal:vertical)
7. Ramps have:
    7.1. Longitudinal slope of at most 12:1 (horizontal:vertical)
    7.2. Rise less than 30 inches
    7.3. Protective edging at least 2 inches high on each side and handrails at a height from 34 to 38 inches above the walkway surface if the rise is greater than 6 inches
8. Curb ramps have:
    8.1. Longitudinal slope of at most 12:1 (horizontal:vertical)
    8.2. Protective edging at least 2 inches high on each side if the curb ramp does not have flares and the rise is greater than 6 inches
9. Pedestrians are channelized when routed off existing pedestrian routes

Construct handrails such that they are continuous, smooth and free of sharp or rough edges.

Provide an overhead covering to protect pedestrians from falling objects and drippings from overhead structures.

If the temporary access route is next to traffic or work activities, place a temporary barrier to separate the route from vehicles and equipment.

Install a detectable warning surface at locations where a curb ramp, landing, or blended transition connects to a street. Install the warning surface such that it extends a minimum of 36 inches in the direction of travel and for the full width of the landing, blended transition, or curb ramp, excluding the flares.

Maintain the temporary pedestrian access route clear of obstructions. Do not allow traffic control devices, equipment, or construction materials to protrude into the walkway. Maintain a continuous unobstructed path connecting all pedestrian routes, parking lots, and bus stops located within the project limits.

Remove the temporary pedestrian access route when the Engineer determines it is no longer needed.

Provide a temporary pedestrian access route through falsework under section 16-2.02.

12-4.04D Payment

Not Used

Replace the last sentence in the 1st paragraph of section 12-6.03A with:

01-20-17

On multilane roadways, freeways, expressways, and 2-lane roadways with shoulders 4 feet or more in width, the temporary pavement delineation must also include edge line delineation for traveled ways open to traffic.

Replace the 1st sentence in the 3rd paragraph of section 12-6.03A with:

07-15-16

When the Engineer determines the temporary pavement delineation is no longer required for the direction of traffic, remove the temporary pavement delineation, including any underlying adhesive for temporary pavement markers, from the final layer of surfacing and from the pavement to remain in place.

Replace the introductory clause in the 1st paragraph of section 12-6.03C with:

01-20-17

On multilane roadways, freeways, expressways, and 2-lane roadways with shoulders 4 feet or more in width open to traffic where edge lines are obliterated and temporary pavement delineation to replace those edge lines is not shown, provide temporary pavement delineation for:

Replace *4-inch-wide* at each occurrence in section 12-6.03C with:

04-20-18

6-inch-wide

^^

13 WATER POLLUTION CONTROL

04-20-18

Replace *construction phase* and its definition in section 13-1.01B with:

01-20-17

construction phase: Phase that includes (1) the highway construction phase for building roads and structures, (2) the plant establishment, permanent erosion control establishment, and maintenance phase for placing vegetation for final stabilization, and (3) the suspension phase for suspension of work activities or a winter shutdown. The construction phase starts at the start of job site activities and ends at Contract acceptance.

Replace *General Industrial Permit* in the 2nd item in the list in the paragraph of section 13-1.01C(3) with:

05-06-16

Industrial General Permit

Add to the list in the paragraph of section 13-1.01C(3):

01-20-17

3. Copy of the plans for an offsite drying facility if you will be drying liquid residue from concrete grooving or grinding activities before disposal. The facility may include temporary lined ponds or other measures to prevent the liquid residue from infiltrating the soil. The plans must be sealed and signed by an engineer who is registered as a civil engineer in the State.

Replace section 13-1.01C(5) with:

01-20-17

13-1.01C(5) Disposal Documentation

At least 15 days before starting concrete grooving or grinding activities, submit a copy of one of the following documents from the disposal facility that will receive the grooving or grinding residue:

1. RWQCB permit allowing the facility to manage and dispose of the residue
2. Written approval from the RWQCB authorizing the facility to receive the residue
3. Local, state, or federal permits if the facility is located outside the State

Within 5 business days of completing concrete grooving or grinding activities, submit the disposal receipts and weight tickets as informational submittals.

Replace the 2nd paragraph of section 13-1.01D(2) with:

05-06-16

Discharges from manufacturing facilities, such as batch plants and crushing plants, must comply with the discharge requirements in the NPDES General Permit for Storm Water Discharges Associated with Industrial Activities; Order No. 2014-0057-DWQ, CAS000001 (Industrial General Permit), issued by the SWRCB. For the Industrial General Permit, go to the SWRCB website.

Replace *General Industrial Permit* in the 3rd paragraph of section 13-1.01D(2) with:

05-06-16

Industrial General Permit

Add to the list in the 2nd paragraph of section 13-1.03B:

01-20-17

7. Offsite drying facilities for drying wastes before disposal

Replace item 7 in the list in the 2nd paragraph of section 13-2.01C with:

04-20-18

7. Include a copy of each permit obtained by the Department, such as the Department of Fish and Game permits, US Army Corps of Engineers permits, RWQCB 401 certifications, Docket No. ESPO-SMA 15/16-001 Soil Management Agreement for Aerially Deposited Lead-Contaminated Soils with the DTSC (ADL Agreement), ADL Agreement notification, and RWQCB waste discharge requirements for reuse of aerially deposited lead

Add between *Unit* and *the* in the 1st sentence in the 3rd paragraph of section 13-3.01A:

01-20-17

or on federal or tribal lands

Replace the paragraph in section 13-3.01C(1) with:

01-20-17

Submit the documents shown with an *X* in the following table:

Submittal Requirements

Document	Risk level 1	Risk level 2	Risk level 3	EPA	Lake Tahoe Hydrologic Unit
SWPPP	X	X	X	X	X
Construction Site Monitoring Program	X	X	X	X	X[a]
Job site monitoring reports	X	X	X	X	X
Sampling and analysis plan	X	X	X	X	X
Sampling and analysis plan for nonvisible pollutants	X	X	X	X	X
Sampling and analysis plan for pH and turbidity	--	X	X	--	X
NAL reports	--	X	X	--	X
Receiving water monitoring trigger reports	--	--	X	--	--
Rain Event Action Plan	--	X	X	--	X
Annual Certification	X	X	X	X	X
Stormwater Annual Report	X	X	X	X	X

[a]For a project in the Lake Tahoe Hydrologic Unit, this program is referred to as the Construction Site Monitoring and Reporting Program

Replace item 5 in the list in the 2nd paragraph of section 13-3.01C(2)(a) with:

04-20-18

5. Include a copy of each permit obtained by the Department, such as the Department of Fish and Game permits, US Army Corps of Engineers permits, RWQCB 401 certifications, Docket No. ESPO-SMA 15/16-001 Soil Management Agreement for Aerially Deposited Lead-Contaminated Soils with

the DTSC (ADL Agreement), ADL Agreement notification, and RWQCB waste discharge requirements for aerially deposited lead reuse

Add between *Unit* and *discharges* in the 1st paragraph of section 13-3.01D(2):

01-20-17

or on federal or tribal lands

Replace the 2nd paragraph of section 13-3.01D(2) with:

09-02-16

For a project in the Lake Tahoe Hydrologic Unit, discharges of stormwater from the project must comply with the NPDES General Permit for General Waste Discharge Requirements and National Pollutant Discharge Elimination System General Permit for Storm Water Discharges Associated with Construction Activity in the Lake Tahoe Hydrologic Unit, Counties of Alpine, El Dorado, and Placer, (Order No. R6T-2016-0010 and NPDES No. CAG616002). You may view the General Permit for the Lake Tahoe Hydrologic Unit at the Construction Storm Water Program page of the SWRCB website.

Add to the end of section 13-3.01D(2):

01-20-17

A project on federal or tribal lands must comply with the permit issued by the US EPA for National Pollutant Discharge Elimination System General Permit for Discharges from Construction Activities. This permit governs stormwater and nonstormwater discharges from work activities at the job site. This permit may be viewed at the US EPA website.

Add to the beginning of section 13-3.03:

01-20-17

Post a sign or other notice at a safe, publicly accessible location close to the job site. The notice must include the NPDES tracking number and a contact name and phone number for obtaining additional project information. Locate the sign or notice such that it is visible from the part of the highway nearest the work activities.

Replace the 2nd paragraph of section 13-4.03D(3) with:

01-20-17

Collect concrete waste simultaneously with the waste-producing activity. Concrete waste includes grout, dust, debris, residue, and slurry from demolition, saw cutting, coring, grooving, or grinding activities.

Add to the end of section 13-4.03D(3):

01-20-17

Dispose of liquid residue from concrete grooving or grinding activities at an appropriately permitted disposal facility.

If authorized, you may transport liquid grooving or grinding residue to a contractor-support facility for drying.

Replace section 13-5.02C with:

01-20-17

Section 13-5.02C Temporary Mulch

Temporary mulch must comply with the specifications for wood mulch in section 20.

Replace the 1st paragraph of section 13-5.03C with:

01-20-17

Spread temporary mulch as specified for spreading wood mulch in section 20.

Replace the 2nd paragraph of section 13-8.01D(2) with:

09-02-16

For a project within the Lake Tahoe Hydrologic Unit, the design, installation, operation, and monitoring of the temporary ATS and monitoring of the treated effluent must comply with Attachment E of the NPDES General Permit for General Waste Discharge Requirements and National Pollutant Discharge Elimination System General Permit for Storm Water Discharges Associated with Construction Activity in the Lake Tahoe Hydrologic Unit, Counties of Alpine, El Dorado, and Placer, (Order No. R6T-2016-0010 and NPDES No. CAG616002). You may view the General Permit for the Lake Tahoe Hydrologic Unit at the Construction Storm Water Program page of the SWRCB website.

Replace *high-visibility fence* at each occurrence in section 13-10.02 with:

01-20-17

temporary high-visibility fence

Replace sections 13-11–13-15 with:

04-20-18

13-11 RESERVED

13-12 TEMPORARY CREEK DIVERSION SYSTEMS

Reserved

13-13–13-15 RESERVED

^^^

14 ENVIRONMENTAL STEWARDSHIP

04-20-18

Add to section 14-6.02:

07-21-17

biological resource incident: Take of a regulated species or violation of a biological resource PLAC.

invasive species: Species whose presence in the environment causes economic or environmental harm or harm to human health.

07-21-17

Delete *regulated fish* and its definition in section 14-6.02.

Replace *February 15 to September 1* in the 2nd paragraph of section 14-6.03B with:

07-21-17

February 1 to September 30

Replace the 1st paragraph of section 14-6.03C with:

07-21-17

Protect all life stages of regulated fish in streams and conduct work activities to allow free passage of migratory fish.

Replace *listed* in the 2nd paragraph of section 14-6.03C with:

07-21-17

regulated

Replace item 4 in the list in the 2nd paragraph of section 14-6.03D(1) with:

07-21-17

4. Immediately notify the Engineer of any take of regulated species or violation of a biological resource PLAC

Add to the list in the 3rd paragraph of section 14-6.03D(1):

07-21-17

10. Details of any take of regulated species or violation of a biological resource PLAC

Add between the 1st and 2nd sentences in the 4th paragraph of section 14-6.03D(1) with:

07-21-17

If required under PLACs, the Department sends the biologist's statement of qualifications to regulatory agencies for review and approval before hiring. Allow 30 days for the regulatory agencies' review.

07-21-17

Delete the 1st sentence of the 5th paragraph of section 14-6.03D(1).

Add between *is* and *authorized* in the last paragraph of section 14-6.03D(1):

07-21-17

approved by regulatory agencies

Add between the 2nd and 3rd sentences in the 3rd paragraph of section 14-10.01:

01-20-17

Do not perform solid waste management in the median area unless there is construction activity present. Perform solid waste management monthly during the plant establishment period.

Replace the 2nd paragraph of section 14-11.01 with:

04-20-18

If hazardous waste is or will be generated on the job site, the WPC manager must be knowledgeable of proper handling and emergency procedures for hazardous waste as demonstrated by submitting a training certificate which indicates completion of training required under 22 CA Code of Regs § 66265.16.

Replace the last paragraph of section 14-11.03 with:

01-20-17

Dispose of hazardous waste within 90 days of the start of generation. Use a hazardous waste manifest and a transporter registered with the DTSC to transport the waste to an appropriately permitted hazardous waste management facility. The transporter must have completed the California Highway Patrol's Basic Inspection of Terminals Program with a satisfactory rating.

Replace *13-mils-thick* in section 14-11.05A with:

04-20-18

12-mils-thick

Replace section 14-11.08 with:

04-20-18

14-11.08 REGULATED MATERIAL CONTAINING AERIALLY DEPOSITED LEAD

Reserved

Replace section 14-11.09 with:

04-20-18

14-11.09 MINIMAL DISTURBANCE OF REGULATED MATERIAL CONTAINING AERIALLY DEPOSITED LEAD

Reserved

Replace the 2nd paragraph of section 14-11.12E with:

04-20-18

The Engineer signs the manifests as the hazardous waste generator within 5 business days of 1) receiving and accepting the analytical test results and 2) receiving your request for the generator's EPA Identification Number.

Replace the 2nd paragraph of section 14-11.13A with:

04-20-18

Any work that disturbs the existing paint system produces debris containing heavy metals in amounts that exceed the established thresholds in 8 CA Code of Regs and exposes workers to health hazards which must be addressed in your lead compliance plan. Welding, cutting, or heating the surfaces coated by the existing paint system produces toxic fumes and must be done in compliance with 8 CA Code of Regs § 1537.

Any work that disturbs the existing paint system produces debris containing heavy metals in amounts that exceed the thresholds established in 22 CA Code of Regs. This debris is a Department-generated hazardous waste.

Replace the paragraph of section 14-11.13G(1) with:

04-20-18

For bidding purposes, assume the debris is a CA hazardous waste. Assume the debris is not regulated under the Federal Resource Conservation and Recovery Act, 42 USC § 6901 et seq. Disposal of hazardous waste debris identified by test results to be regulated under the Resource Conservation and Recovery Act is change order work.

Replace the 2nd paragraph of section 14-11.13G(2) with:

04-20-18

Use a hazardous waste manifest and a transporter whose vehicles have current DTSC registration certificates when transporting hazardous waste. The Engineer provides the generator's EPA Identification Number and signs the manifests as the hazardous waste generator within 5 business days of accepting the waste characterization test results and receiving your request for the generator's EPA Identification Number.

Replace the 2nd paragraph of section 14-11.13G(3) with:

01-20-17

You may dispose of nonhazardous debris at a facility equipped to recycle the debris if you make all arrangements with the recycling facility's operator and perform any facility-required testing of the debris.

Replace section 14-11.16 with:

07-21-17

14–11.16 ASBESTOS-CONTAINING CONSTRUCTION MATERIALS IN BRIDGES

Reserved

^^^

16 TEMPORARY FACILITIES

04-20-18

Replace the heading of section 16-2.03 with:

01-20-17

TEMPORARY HIGH-VISIBILITY FENCES

Replace section 16-2.03A(1) with:

01-20-17

16-2.03A(1) Summary

Section 16-2.03 includes specifications for constructing temporary high-visibility fences.

Constructing a temporary high-visibility fence includes the installation of any signs specified in the special provisions.

Replace *1 by 1 inch to 2 by 4 inches* in the 3rd paragraph of section 16-2.03B with:

04-20-18

a minimum 1 by 1 inch to a maximum 2 by 4 inches

04-20-18

Delete the 5th paragraph of section 16-2.03B.

01-20-17

Delete the 2nd paragraph of section 16-2.04A(1)(a).

^^

DIVISION III EARTHWORK AND LANDSCAPE

19 EARTHWORK

04-20-18

Add between the 2nd and 3rd paragraphs of section 19-1.01A:

07-21-17

If paleontological resources mitigation is specified in the special provisions under section 14-7.04, performing earthwork activities includes:

1. Paleontological resources training for your staff and subcontractors
2. Submittals of your schedule of subsurface-disturbing activities and updated schedules
3. Coordination and work with the Department's mitigation team

Replace *selected material* and its definition in section 19-2.01B with:

04-20-18

19-2.01B Definitions

selected material: Specific material excavated from a described location on the job site. Selected material includes topsoil.

Replace section 19-2.03D with:

04-20-18

19-2.03D Selected Material

19-2.03D(1) General

If selected material is not used for a specified layer, place the selected material in the roadway prism as embankment or structure backfill.

If selected material is used as a specified layer, spread and compact it under section 25.

If practicable and unless processing of material is required, haul selected material directly from the excavation to its final position in the roadway prism and compact it in place.

Selected material must remain in place until it can be placed in its final position unless stockpiling of selected material is ordered.

If stockpiling of selected material is ordered, excavate and stockpile the selected material until the stockpiled material is to be placed in its final position in the roadway prism. This work is change order work.

19-2.03D(2) Topsoil

Reserved

Replace the last paragraph of section 19-3.02E:

04-20-18

You may use slurry cement backfill as structure backfill only for pipe culverts.

Add to the list in the 6th paragraph of section 19-3.04:

04-20-18

3. Structure excavation more than 0.5 foot from the depth shown is a work-character change if you request an adjustment for an increased depth or the Engineer orders an adjustment for a decreased depth.

Replace section 19-4 with:

01-20-17

19-4 ROCK EXCAVATION

19-4.01 GENERAL

19-4.01A General

19-4.01A(1) Summary

Section 19-4 include general specifications for performing rock excavation.

19-4.01A(2) Definitions

flyrock: Rock that becomes airborne due to blasting.

near-field blasting: Blasting within 30 feet of a building, highway facility, or utilities.

19-4.01A(3) Submittals

Reserved

19-4.01A(4) Quality Assurance

Reserved

19-4.01B Materials

Not Used

19-4.01C Construction

Excavate rock by blasting, controlled blasting, using chemical expanders or hydraulic splitters, or another authorized method.

19-4.01D Payment

The payment quantity for any type of rock excavation is measured as specified for roadway excavation.

19-4.02 PRESPLITTING

19-4.02A General

19-4.02A(1) Summary

Section 19-4.02 includes specifications for presplitting rock to form rock excavation slopes in conjunction with blasting or controlled blasting.

19-4.02A(2) Definitions

presplitting: Establishing a free surface or shear plane in rock along the specified excavation slope by the controlled use of explosives and blasting accessories in appropriately aligned and spaced drilled holes.

19-4.02A(3) Submittals

Submit a copy of the explosive manufacturer's instructions as an informational submittal before using any column-type explosive for presplitting.

19-4.02A(4) Quality Assurance

Reserved

19-4.02B Materials

The maximum diameter of explosive used in a presplit hole must not be greater than 50 percent of the diameter of the presplit hole.

Standard cartridge explosives prepared and packaged by explosive manufacturing firms must be used in the presplit holes. The explosives must consist of one of the following:

1. Fractional portions of standard cartridges to be affixed to a detonating cord in the field
2. Solid column explosives joined and affixed to a detonating cord in the field

Stemming materials must be dry, free-running material complying with the gradation requirements shown in the following table when tested under California Test 202:

Sieve size	Percentage passing
3/8"	100
No. 8	10

19-4.02C Construction

Presplit the rock to form rock excavation slopes.

Before drilling the presplitting holes, remove overburden soil and weathered rock along the top of the excavation for a distance of at least 50 feet beyond the production hole drilling limits or to the end of the excavation. Expose fresh rock to an elevation equal to the bottom of the adjacent lift of the presplitting holes being drilled.

Drill slope holes for presplitting along the line of the planned slope. The drilled holes must be from 2-1/2 to 3 inches in diameter. Use the proper drilling equipment and techniques to ensure that no hole deviates (1) from the plane of the planned slope by more than 12 inches or (2) from parallel to an adjacent hole by more than 67 percent of the planned horizontal spacing between holes.

The Department does not pay for drilling more than 3 feet below finished grade unless additional drilling is ordered. The additional drilling is change order work.

The length of presplit holes for an individual lift must not exceed 20 feet, unless you can demonstrate to the Engineer that you can stay within the specified tolerances and produce a uniform slope. The length of holes may then be increased to a maximum of 60 feet if authorized.

Space the presplit holes a maximum of 3 feet on centers. Adjust the spacing to produce a uniform shear face between holes.

The Engineer may order you to drill auxiliary holes along the presplit line. These holes must not be loaded or stemmed. Except for spacing, the auxiliary drill holes must comply with the specifications for presplit holes. This work is change order work.

Place the adjacent line of production holes inside the presplit lines such that you avoid damage to the presplit face.

If necessary to reduce shatter and overbreak of the presplit surface, drill the 1st line of production holes parallel to the slope line at the top of the cut and at each bench level thereafter. Immediately stop blasting activities if the presplit surface is damaged.

Do not drill production holes within 8 feet of a presplit plane unless authorized. The bottom of the production holes must not be lower than the bottom of the presplit holes.

You may use a construction working bench offset by 24 inches from the bottom of each lift to drill the next lower presplitting pattern.

Adjust the drilling to compensate for any drift of previous levels and for the offset at the start of new levels to maintain the specified slope plane.

If the drilling and blasting methods do not produce a uniform slope and shear face without overbreak and within the specified tolerances, drill, blast, and excavate in short sections, up to 100 feet, until you achieve the desired results.

If you use a fractional portion of a standard explosive cartridge, firmly affix the cartridge to a length of detonating cord equal to the depth of the drill hole. Ensure the cartridge does not slip down the detonating cord or cock across the hole and bridge the flow of stemming material. Space the cartridges along the length of the detonating cord at a maximum of 30 inches on center. Adjust the spacing as needed to achieve the desired results.

If you use a solid column-type explosive, assemble and affix the column to the detonating cord under the explosive manufacturer's instructions.

The bottom charge of a presplit hole may be larger than the line charges but must not cause overbreak. Place the top charge of the presplitting hole far enough below the collar to avoid overbreaking the surface.

Before placing the charge, clear the hole of any obstructions for the hole's entire depth. Ensure that placing of the charge does not cause caving of material from the walls of the holes.

The Engineer may order the use of stemming materials as necessary to achieve a satisfactory presplit face. Stemmed presplit holes must be completely filled to the collar.

Simultaneously detonate charges in each presplitting pattern.

The tolerances specified in section 19-2.03G do not apply to presplit surfaces of excavation slopes where presplitting is required. The presplit face must not deviate more than 1 foot from the plane passing through adjacent drill holes, except where the character of the rock is such that irregularities are unavoidable. The average plane of the completed slopes must not deviate more than 1 foot from the plan slopes. These tolerances are measured perpendicular to the plane of the slope. No portion of the slope may encroach on the roadbed.

If equally satisfactory presplit slopes are obtained, you may either presplit the slope face before drilling for production blasting or presplit the slope face and production blast at the same time, provided that the presplitting drill holes are fired with zero delay. Detonation of the production holes must be delayed from the detonation of the presplit line and must start at the row of holes farthest from the new slope line and progressing in steps to the row of holes nearest the presplit line. Detonation of the production holes must result in a minimum 50 ms delay between detonation of the presplit holes and detonation of the row of production holes nearest the presplit line. The presplitting holes must extend either to the end of the excavation or for a distance of not less than 50 feet beyond the limits of the production holes to be detonated.

19-4.02D Payment

The payment quantity for drill hole (presplitting) is the theoretical slope length determined from the elevation taken before detonating each lift and a plane 3 feet below finished grade. For holes that comply with the specified slope and tolerances, except alignment within the plane of the slope, the payment quantity is 75 percent of the theoretical slope length.

The Department does not pay for holes that do not show a hole trace for approximately 50 percent of the drilled length.

19-4.03 BLASTING

19-4.03A General

19-4.03A(1) Summary

Section 19-4.03 includes specifications for excavating rock by blasting.

Blasting activities must comply with federal, State, and local blasting regulations, including 8 CA Code of Regs Ch 4, Subchapter 7, Group 18, "Explosive Materials."

19-4.03A(2) Definitions

Reserved

19-4.03A(3) Submittals

Submit 3 copies of your blasting safety plan. The plan must include:

1. References to applicable federal, State, and local codes and regulations
2. Copies of permits required for blasting activities
3. Business name, contractor license number, address, and telephone number of the blasting subcontractor
4. Proof of current liability insurance and bonding
5. Name, address, telephone number, copies of applicable licenses, and resume of:
   - 5.1. Blaster-in-charge
   - 5.2. Personnel responsible for blast design, loading, and conducting blasting operations
   - 5.3. Safety officer for the blasting subcontractor

6. Name, address, and telephone number of the local fire station and law enforcement agencies
7. Detailed description of:
    7.1. Location where explosives will be stored
    7.2. Security measures to protect and limit access to the explosives
    7.3. Means for transporting explosives
    7.4. List of personnel allowed to handle the explosives
8. Exclusion zone and limited-entry zone for nonblast-related operations and personnel surrounding loading and blasting operations
9. Details of warning signals used to alert employees on the job site of an impending blast and to indicate the blast is completed and the area is safe to enter
10. Procedures for conducting blasting operations
11. Measures to protect blasting operations and personnel from lightning
12. Emergency evacuation procedures for areas where explosives may be present
13. Methods for recognizing, handling, and resolving misfires, including:
    13.1. Who will be notified
    13.2. How the blast zone will be secured until the misfire is resolved
    13.3. Identification of equipment that may be needed to resolve misfires
14. Details of signs to be used around blasting zones, including:
    14.1. Timing of when signs will be posted for a specific blast
    14.2. Name and telephone number of the person responsible for placing the signs
    14.3. Roadway signs for compliance with the *California MUTCD*, Chapter 6H, Typical Application 2
15. Traffic control details for:
    15.1. Loading and blasting operations
    15.2. Misfire event or other blast-related phenomenon that causes a transportation corridor to remain closed to the public
16. Description of the possible generation of noxious gas and details of the safeguards to be used to protect employees, work zones adjacent to the shot, private property, and the public
17. Procedure to report and resolve complaints for blast-related accidents
18. Copies of each SDS and manufacturer data sheets of explosives, caps, primers, initiators, and other compounds

If the plan requires revisions, the Department provides comments. Submit a revised plan after receiving the comments. Submit 3 copies of the revised blasting safety plan after authorization.

19-4.03A(4) Quality Assurance

Reserved

19-4.03B Materials

Not Used

19-4.03C Construction

You may use hydraulic splitters, pneumatic hammers, blasting, or another authorized roadway excavation method to fracture rock and construct stable final rock cut faces.

19-4.03D Payment

Not Used

19-4.04 CONTROLLED BLASTING

19-4.04A General

19-4.04A(1) Summary

Section 19-4.04 includes specifications for excavating rock by controlled blasting.

Blasting activities must comply with federal, State, and local blasting regulations, including 8 CA Code of Regs Ch 4, Subchapter 7, Group 18, "Explosives and Pyrotechnics," and 22 CA Code of Regs, Division 4.5, Ch 33, "Best Management Practices for Perchlorate Materials."

19-4.04A(2) Definitions

controlled blasting: Using explosives and blasting accessories in predetermined spaced and aligned drilled holes.

19-4.04A(3) Submittals

19-4.04A(3)(a) General

Reserved

19-4.04A(3)(b) Blasting Safety Plan

Submit 3 copies of your blasting safety plan. The plan must include:

1. References to applicable federal, State, and local codes and regulations
2. Copies of permits required for blasting activities
3. Business name, contractor license number, address, and telephone number of the blasting subcontractor
4. Proof of current liability insurance and bonding
5. Name, address, telephone number, copies of applicable licenses, and resume of:
   - 5.1. Blaster-in-charge.
   - 5.2. Personnel responsible for blast design, loading, and conducting blasting operations.
   - 5.3. Safety officer for the blasting subcontractor.
   - 5.4 Blast monitoring consultant.
   - 5.5 Blasting consultant if the project involves near-field blasting activities. Include a list of controlled blasting projects worked on by the blasting consultant.
6. Name, address, and telephone number of the local fire station and law enforcement agencies
7. Detailed description of:
   - 7.1. Location where explosives will be stored
   - 7.2. Security measures to protect and limit access to the explosives
   - 7.3. Means for transporting explosives
   - 7.4. List of personnel allowed to handle the explosives
8. Exclusion zone and limited-entry zone for nonblast-related operations and personnel surrounding loading and blasting operations
9. Details of warning signals used to alert employees on the job site of an impending blast and to indicate the blast is completed and the area is safe to enter
10. Procedures for conducting blasting operations
11. Measures to protect blasting operations and personnel from lightning
12. Emergency evacuation procedures for areas where explosives may be present
13. Methods for recognizing, handling, and resolving misfires, including:
    - 13.1. Who will be notified
    - 13.2. How the blast zone will be secured until the misfire is resolved
    - 13.3. Identification of equipment that may be needed to resolve misfires
14. Details of signs to be used around blasting zones, including:
    - 14.1. Timing of when signs will be posted for a specific blast
    - 14.2. Name and telephone number of the person responsible for placing the signs
    - 14.3. Roadway signs for compliance with the *California MUTCD*, Chapter 6H, Typical Application 2
15. Traffic control details for:
    - 15.1. Loading and blasting operations
    - 15.2. Misfire event or other blast-related phenomenon that causes a transportation corridor to remain closed to the public
16. Description of the possible generation of noxious gas and details of the safeguards to be used to protect employees, work zones adjacent to the shot, private property, and the public
17. Procedure to report and resolve complaints for blast-related accidents
18. Copies of each SDS and manufacturer data sheets of explosives, caps, primers, initiators, and other compounds

If the blasting safety plan requires revisions, the Department provides comments. Submit a revised plan after receiving comments. Submit 3 copies of the revised plan after authorization.

19-4.04A(3)(c) Controlled Blasting Plan

Submit 3 copies of your controlled blasting plan for each blast. The plan must include details on how each blast will be controlled and the following:

1. Blast identification by numerical and chronological sequence
2. Location, referenced to stationing, offset distance, date, and time of the blast

3. Drawings showing drill hole pattern, spacing, burden, and initiation sequence
4. Typical cross-sections through the zone to be blasted
5. Groundwater level, if present, within the prism to be blasted
6. Initiation-sequence diagram showing the actual firing time of each delay
7. Type of material to be blasted
8. Number of drill holes
9. Diameter, depth, and spacing of holes
10. Height or length of stemming
11. Types and characteristics of explosives, including the explosive's density, relative strength, and date of manufacture
12. Type of caps and delay periods and their date of manufacture
13. Total amount of explosives to be used
14. Total amount of explosives detonating within any 8 ms period
15. Powder factor (pounds of explosive per cubic yard of material blasted)
16. Method of firing
17. Direction and distance to nearest building or structure
18. Type of instrumentation and method for monitoring vibration and noise from the blasting activities
19. Location and placement of the instrumentation
20. Measures to limit noise and flyrock
21. Measures to limit overbreak
22. Name of the blasting subcontractor
23. Name and signature of the blaster-in-charge
24. Drawings showing the spacing and proximity of shot guards relative to the blast location

If you revise the controlled blasting plan to adjust for site conditions or the Department provides comments, submit a revised plan before starting controlled blasting. Submit 3 copies of the revised plan after authorization.

19-4.04A(3)(d) Preblast and Postblast Surveys

Submit a preblast survey of all structures, including buildings, within 330 feet of controlled blasting locations at least 15 days before starting the blasting activities. Submit the preblast survey with the controlled blasting plan.

The preblast survey must include:

1. Written report, sketches, and photographs or video with the date and time displayed on the image
2. Name of the person who performed the survey
3. Names of the property owner and occupants
4. Property address
5. Date and time of the inspection
6. Description of the structure or other improvements, including culverts and bridges
7. Detailed description of the existing condition of the walls, ceiling, and floor of each interior room, including any attic or basement
8. Detailed description of the existing condition of the foundations, exterior walls, roofs, doors, windows, and porches
9. Detailed description of the existing condition of garages, outbuildings, sidewalks, driveways, and swimming pools
10. Detailed listing of highway sign posts, light fixtures, and overhead power lines
11. Survey of wells or other private water supplies, including the total depth and existing water surface levels
12. Identification of sites conducting procedures, processes, or operations that may be sensitive to blasting activities
13. Scaled map or aerial photo showing the location of the structures and properties surveyed and the location of all proposed blasting sites

If blasting activities are suspended for 45 days or more, perform another preblast survey and submit the survey at least 15 days before resuming blasting activities.

Submit a postblast survey of the same buildings and other structures as in the preblast survey within 15 days after completing blasting activities. The postblast survey must include all items included in the preblast survey.

19-4.04A(3)(e) Vibration and Noise Monitoring Report

Submit a vibration and noise monitoring report for each controlled blast shot. The report must include:

1. Identification of the blasting seismograph used to record each blast shot
2. Name of the blast monitoring consultant
3. Distance and direction of the recording stations from the blast area
4. Type of ground at the recording station and type of material on which the instrumentation sits
5. Maximum particle velocity in each component and the resultant peak particle velocity of each shot
6. Copy of the seismograph readings with the date and signature of the blast monitoring consultant
7. Noise levels recorded in dB (C-network or Linear network) units

19-4.04A(3)(f) Video Recording

Submit a video recording of each controlled blast on a DVD or other Engineer-authorized data-storage device. Identify each video or section of the video with an index to identify each blast.

19-4.04A(3)(g) Blasting Complaint Report

Submit a report for each blasting complaint, including:

1. Name and address of the complainant
2. Date, time, and nature of the complaint
3. Dated photo or videotape of the physical damage
4. Name of the person who received the complaint
5. Record of the complaint investigation
6. Resolution of the complaint

19-4.04A(3)(h) Postblast Report

Submit a postblast report within 48 hours of a controlled blast. The report must include all data required in the controlled blasting plan for that shot and the following information:

1. Description of site conditions, loading, and time of blast
2. Description of weather conditions at time of blast including wind direction and cloud cover
3. Drillers boring record
4. Copy of vibration and noise monitoring report
5. Copy of documented complaints arising from the blast

19-4.04A(4) Quality Assurance

19-4.04A(4)(a) General

Reserved

19-4.04A(4)(b) Blaster-In-Charge for Controlled Blasting

Assign a blaster-in-charge to supervise all controlled blasting activities. The blaster-in-charge must have at least 10 years of experience in performing or supervising similar blasting activities and must be a licensed blaster.

19-4.04A(4)(c) Blast Monitoring Consultant for Controlled Blasting

Assign a blast monitoring consultant to monitor blasting-generated vibrations and noise near buildings and other structures that may be subject to damage. The monitoring consultant must be responsible for collecting and interpreting the vibration and noise data. The blast monitoring consultant must:

1. Not be employed by the blasting contractor or other subcontractor on the project
2. Have a minimum 2-year associate's degree in science or engineering
3. Have at least 5 years of documented experience in collecting and interpreting ground vibrations and noise data

19-4.04A(4)(d) Blasting Consultant for Controlled Blasting

Assign a blasting consultant to oversee near-field blasting activities. The blasting consultant must:

1. Be an engineering geologist or civil engineer who is licensed in the State
2. Have at least 10 years of experience providing specialized blasting services in near-field blasting
3. Not be employed by the blasting contractor, explosive manufacturer, or explosive distributor

19-4.04B Materials

Each seismograph used to record controlled blasting activities must be capable of:

1. Recording particle velocities for 3 mutually perpendicular components of vibration and an instantaneous resultant peak vector sum in the range generally found for controlled blasting
2. Continuously measuring, recording, and reporting vibrations along 3 primary axes
3. Measuring and recording vibration frequencies ranging from 2 to 300 Hz
4. Providing a printed record of each event showing a plot of peak particle velocity versus vibration frequencies
5. Measuring and recording airblast noise levels

The seismograph's noise transducer must be detachable from the main unit to allow its placement at elevations with a clear line of sight between the transducer and the blast.

19-4.04C Construction

19-4.04C(1) General

At least 7 days before starting or resuming controlled blasting activities, provide written notification to the occupants of the buildings within 330 feet of the blasting. Notify the occupants of pending blasting activities on the day of blasting.

Do not perform blasts within 1,200 feet of concrete placed within the previous 72 hours.

Before firing any blast, confirm that the groundwater conditions are consistent with the shot design and explosive type to be used.

Before firing any blast in areas where flyrock may result in personal injury or damage to property or the work, cover the rock to be blasted with blasting mats, soil, or other equally serviceable material to prevent flyrock.

If blasting causes flyrock, suspend blasting activities. The blasting consultant must review the job site to determine the cause of the flyrock problem and submit a revised controlled blasting plan that prevents flyrock.

Do not use drill cuttings as stemming in controlled blasting activities.

Keep vibration levels below a peak particle velocity of 2 inches per second at the nearest building, highway facility, or utility.

Limit noise from airblast overpressure levels to below 128 dB (C-scale or linear network) at the nearest building.

Control ground vibrations and noise created from blasting by using properly designed delay sequencing and charge weights for shots.

Provide 3 seismographs to record controlled blasting activities. Record each blast shot using the seismographs. Video record each blast from a safe location with a clear view of the blast area, activities, and progression.

Notify the Engineer no later than the start of the next day's work shift of any blasting complaint received.

19-4.04D Payment

Not Used

19-4.05–19-4.08 RESERVED

Replace the 7th paragraph of section 19-10.03A with:

01-20-17

Do not stockpile material on the geosynthetic or place more geosynthetic than can be covered within 72 hours.

Do not operate equipment or vehicles directly on geosynthetic, except you may operate vehicles and equipment on geogrid if one of the following conditions is met:

1. Vehicles and equipment are:
   1.1. Equipped with rubber tires
   1.2 Operated under 10 mph
   1.3 Operated in a manner to avoid sudden braking and sharp turns
2. At least 0.35 feet of AB has been placed, spread, and compacted on the geogrid

Replace the 2nd heading of section 19-10.03 with:

01-20-17

19-10.03B Subgrade Enhancement Geotextile

^^

20 LANDSCAPE

04-20-18

Replace the 1st paragraph of section 20-1.01D(2) with:

01-20-17

The Engineer performs progress inspections:

1. After marking plant locations
2. Before cultivating work starts
3. Before pressure testing of irrigation pipe on the supply side of control valves
4. Before testing of low voltage control and neutral conductors
5. During irrigation system functional tests
6. Before planting the plants
7. Before completion of planting work
8. Before the start of plant establishment work
9. Once a month during the plant establishment period

07-21-17

Delete *oil or* in the 4th paragraph of section 20-1.02C.

Replace the 3rd paragraph of section 20-2.01B(7) with:

07-21-17

Valve box covers must be labeled. Labels must:

1. Be predrilled plate plastic consisting of 2 layers of contrasting color
2. Be at least 1/8 inch thick
3. Have mechanically engraved inscriptions at least 1 inch high

Covers for valve boxes that contain remote control valves must be labeled with the controller and station.

Covers for valve boxes that contain irrigation equipment must be labeled with the standard abbreviation for that equipment.

Replace section 20-2.01C(2) with:

07-21-17

20-2.01C(2) Trenching and Backfilling

For a project with multiple water service points, excavate and backfill the trenches 1 service point at a time.

Remove rocks and debris encountered during trenching activity. The removal of rocks and debris is change order work.

Backfill each trench with material that is excavated from the trench. Each trench must have a uniform bearing throughout the entire length and must be free of jagged rubble, rock, broken concrete, asphalt concrete and sharp objects greater than 2 inches in greatest dimension.

Compact the backfill in the trench to a minimum relative compaction of 90 percent. If the trench backfill settles, place additional material and compact until the backfill is level with the surrounding grade.

Ensure conduit, supply line, and joints are not moved or damaged by backfill activity.

If trenching requires the removal of:

1. Plants:
   - 1.1 Remove plants as necessary under section 20-1.03C.
   - 1.2 If plants are to remain, adjust the trench alignment to minimize damage.
   - 1.3 If the supply line location interferes with the excavation of plant holes, relocate the plant hole away from the supply line.
   - 1.4 Where authorized by the Engineer, prune trees and shrubs as necessary to complete the trenching work.
2. Turf:
   - 2.1 Do not remove a width of more than 12 inches.
   - 2.2 Replace with sod under section 20-3.02C(3)(e).
3. Groundcover:
   - 3.1 Do not remove a width of more than 6 feet.
   - 3.2 Replace groundcover with plants from flats and plant at 12 inches on center under section 20-3.02C.
   - 3.3 You may rototill existing *Carpobrotus* and *Delosperma.* Backfill for the trenches must not contain plants longer than 6 inches. No replacement of *Carpobrotus* and *Delosperma* is required if removed by rototilling.
4. Existing surface:
   - 4.1 Make a minimum 2-inch-deep saw cut along neat lines around the perimeter of the pavement to be removed at locations determined by the Engineer.
   - 4.2 Place a minimum of 2 inches of sand bedding under and on top of supply lines and conduits.
   - 4.3 Compact the backfill under the replacement surfacing to a minimum relative compaction of 95 percent.
   - 4.4 Replace the structural section to match the removed materials. The surface must have the same uniform smoothness, color, and texture as the adjacent surface.

If trenching in areas to receive new surfacing:

1. Place a minimum of 2 inches of sand bedding under and on top of supply lines and conduits.
2. Compact the backfill under the new surfacing to a minimum relative compaction of 95 percent.

Replace *86* in the 1st paragraph of section 20-2.01C(3) with:

04-15-16

87

Replace the paragraphs of section 20-2.03B with:

04-20-18

Each cam coupler assembly must consist of a cam coupler, dust cap, check valve, pipes, fittings, concrete thrust block, and valve box with woven wire cloth and gravel.

Cam couplers must be manufactured of brass or bronze and be able to withstand a working pressure of 150 psi.

04-20-18

Delete the 2nd paragraph of section 20-2.03C.

Replace section 20-2.04A(4) with:

04-15-16

Perform conductors test. The test must comply with the specifications in section 87.

Where the conductors are installed by trenching and backfilling, perform the test after a minimum of 6 inches of backfill material has been placed and compacted over the conductors.

Replace *5* in the 1st paragraph of section 20-2.04C(2) with:

07-21-17

10

Add between the 1st and 2nd paragraphs of section 20-2.04C(2):

07-21-17

Tie a 24-inch loop of wire at all changes of direction that are greater than 45 degrees. Untie the loops after all the connections are made.

Replace the 1st paragraph of section 20-2.04C(4) with:

04-15-16

Splice low voltage control and neutral conductors under section 87, except do not use Method B.

Replace the 3rd paragraph of section 20-2.05B with:

07-15-16

The impeller must be glass reinforced nylon on a tungsten carbide shaft.

Replace *86* in the 2nd paragraph of section 20-2.06C with:

04-15-16

87

Replace section 20-2.07B(5) with:

04-15-16

20-2.07B(5) PVC Pipe Conduit Sleeve

PVC pipe conduit sleeves must be schedule 40 complying with ASTM D1785.

Fittings must be schedule 80.

Replace the 9th paragraph of section 20-2.07C(1) with:

07-21-17

Place Type G pavement markers with retroreflective face facing away from the oncoming traffic under section 81-3 on paved shoulders or dikes at irrigation conduit locations where authorized.

07-21-17

Delete the 2nd paragraph of section 20-2.07C(2)(a).

Replace section 20-2.07C(3) with:

07-21-17

20-2.07C(3) PVC Pipe Conduit Sleeve

Where PVC pipe conduit sleeves 2 inches or less in outside diameter are installed under surfacing, you may install by directional boring under section 20-2.07C(2)(b).

Cap ends of conduit until used.

07-21-17

Delete the 4th and 5th paragraph of section 20-2.08C(4).

Replace sections 20-2.09B and 20-2.09C with:

07-15-16

20-2.09B Materials

20-2.09B(1) General

Swing joints must match the inlet connection size of the riser.

Where shown, a sprinkler assembly must include a check valve.

Threaded nipples for swing joints and risers must be schedule 80, PVC 1120 or PVC 1220 pipe, and comply with ASTM D1785. Risers for sprinkler assemblies must be UV resistant.

Fittings for sprinkler assemblies must be injection-molded PVC, schedule 40, and comply with ASTM D2466.

Flexible hose for sprinkler assemblies must be leak-free, non-rigid and comply with ASTM D2287, cell Type 6564500. The hose must comply with ASTM D2122 and have the thickness shown in the following table:

Nominal hose diameter (inch)	Minimum wall thickness (inch)
1/2	0.127
3/4	0.154
1	0.179

Solvent cement and fittings for flexible hose must comply with section 20-2.08B(5).

20-2.09B(2) Pop-Up Sprinkler Assemblies

Each pop-up sprinkler assembly must include a body, nozzle, swing joint, pressure reducing device, fittings, and sprinkler protector where shown.

20-2.09B(3) Riser Sprinkler Assemblies

Each riser sprinkler assembly must include a body, flexible hose, threaded nipple, nozzle, swing joint (except for a Type V riser), pressure reducing device, fittings, and riser support where shown.

20-2.09B(4) Tree Well Sprinkler Assemblies

Each tree well sprinkler assembly must include a threaded nipple, nozzle, swing joint, fittings, perforated drainpipe, and drain grate.

The perforated drainpipe must be commercial-grade, rigid PVC pipe with holes spaced not more than 6 inches on center on 1 side of the pipe.

The drain grate must be a commercially-available, 1-piece, injection-molded grate manufactured from structural foam polyolefins with UV light inhibitors. Drain grate must be black.

Gravel for filling the drainpipe must be graded such that 100 percent passes the 3/4-inch sieve and 100 percent is retained on the 1/2-inch sieve. The gravel must be clean, washed, dry, and free from clay or organic material.

20-2.09C Construction

Where shown, install a flow shut-off device under the manufacturer's instructions, unless you use equipment with a preinstalled flow shut-off device.

Where shown, install a pressure reducing device under the manufacturer's instructions, unless you use equipment with a preinstalled pressure reducing device.

Install pop-up and riser sprinkler assembly:

1. From 6-1/2 to 8 feet from curbs, dikes, and sidewalks
2. At least 10 feet from paved shoulders
3. At least 3 feet from fences and walls

If sprinkler assembly cannot be installed within these limits, the location will be determined by the Engineer.

Set sprinkler assembly riser on slopes perpendicular to the plane of the slope.

Replace the paragraph of section 20-2.10B(3) with:

07-15-16

Each check valve must be one of the following:

1. Schedule 80 PVC with a factory setting to withstand a minimum 7-foot head on risers
2. Class 200 PVC if used on a nonpressurized plastic irrigation supply line
3. Internal to the sprinkler body with a factory setting to withstand a minimum 7-foot head

07-21-17

Delete item 3 in the list in the paragraph of section 20-2.10B(4).

Replace the paragraph of section 20-2.10C(3) with:

07-15-16

Install check valves as necessary to prevent low-head drainage.

Replace the paragraph of section 20-3.01B(3) with:

04-20-18

20-3.01B(3)(a) General

Soil amendment must comply with the provisions in the Food & Agri Code and as specified in the special provisions.

Replace the paragraphs of section 20-3.01B(10) with:

07-15-16

Each plant stake for vines must be nominal 1 by 1 inch and 18 inches long.

Each plant stake for trees must be nominal 2 by 2 inches or nominal 2 inches in diameter and long enough to keep the tree in an upright position.

Replace the paragraph of section 20-3.01B(11) with:

07-15-16

Each plant tie for vines must be extruded vinyl-based tape, 1 inch wide and at least 8 mils thick.

Each plant tie for trees must be a (1) minimum 3/4-inch-wide, UV-resistant, flexible vinyl tie complying with ASTM D412 for tensile and elongation strength, or (2) lock-stitch, woven polypropylene with a minimum 900 lb tensile strength.

Add between the 7th and 8th paragraphs of section 20-3.02C(3)(b):

07-15-16

Spread the vine shoots and tie them with a plant tie to each stake above the crossing point.

Replace the 8th paragraph of section 20-3.02C(3)(b) with:

07-15-16

Tie trees to the stakes with 2 tree ties, 1 tie to each stake. Each tie must form a figure eight by crossing the tie between the tree and the stake. Install ties at the lowest position that will support the tree in an upright position. Install the ties such that they provide trunk flexibility but do not allow the trunk to rub against the stakes. Wrap each end of the tie 1-1/2 turns around the stake and securely tie or nail it to the stake.

Replace the 1st paragraph of section 20-5.02C(1) with:

07-15-16

Where edging is used to delineate the limits of inert ground cover or wood mulch areas, install the edging before installing the inert ground cover or wood mulch.

07-15-16

Delete *AND MULCHES* in the heading of section 20-5.03.

07-15-16

Delete *and mulches* in the paragraph of section 20-5.03A(1)(a).

Replace the paragraph of section 20-5.03A(3)(a) with:

07-15-16

Before installing inert ground cover, remove plants and weeds to the ground level.

Add to the beginning of section 20-5.03A(3)(b):

07-21-17

Excavate to the depth shown.

07-15-16

Delete *or mulch* at each occurrence in sections 20-5.03A(3)(c) and 20-5.03A(3)(d).

Add to the end of section 20-5.03B(2)(c):

07-21-17

You may use rock with superficial chipping or jagged edges if the rock is placed such that the chipped areas and jagged edges are submerged in the concrete.

04-20-18

Delete the 1st paragraph of section 20-5.03B(3).

Add to the 2nd paragraph of section 20-5.03B(3):

07-21-17

Rock that is exposed on the finished surface must be round, smooth, clean and without jagged edges or chipped areas showing.

Replace section 20-5.03E with:

04-20-18

20-5.03E Rock Mulch

Reserved

Replace section 20-5.04 with:

07-15-16

20-5.04 WOOD MULCH

20-5.04A General

20-5.04A(1) Summary

Section 20-5.04 includes specifications for placing wood mulch.

20-5.04A(2) Definitions

Reserved

20-5.04A(3) Submittals

Submit a certificate of compliance for wood mulch.

Submit a 2 cu ft mulch sample with the mulch source shown on the bag. Obtain authorization before delivering the mulch to the job site.

20-5.04A(4) Quality Assurance

Reserved

20-5.04B Materials

20-5.04B(1) General

Mulch must not contain more than 0.1 percent of deleterious materials such as rocks, glass, plastics, metals, clods, weeds, weed seeds, coarse objects, sticks larger than the specified particle size, salts, paint, petroleum products, pesticides or chemical residues harmful to plant or animal life.

20-5.04B(2) Tree Bark Mulch

Tree bark mulch must be derived from cedar, Douglas fir, or redwood species.

The mulch must be ground such that at least 95 percent of the material by volume is less than 2 inches long in any dimension and no more than 30 percent by volume is less than 1 inch long in any dimension.

20-5.04B(3) Wood Chip Mulch

Wood chip mulch must:

1. Be derived from clean wood
2. Not contain leaves or small twigs
3. Contain at least 95 percent by volume of wood chips with a width and thickness from 1/16 to 3/8 inch and a length from 1/2 to 3 inches

20-5.04B(4) Shredded Bark Mulch

Shredded bark mulch must:

1. Be derived from trees
2. Be a blend of loose, long, thin wood, or bark pieces
3. Contain at least 95 percent by volume of wood strands with a width and thickness from 1/8 to 1-1/2 inches and a length from 2 to 8 inches

20-5.04B(5) Tree Trimming Mulch

Tree trimming mulch must:

1. Be derived from chipped trees and may contain leaves and small twigs
2. Contain at least 95 percent by volume of material less than 3 inches long for any dimension and not more than 30 percent by volume of material less than 1 inch long for any dimension

20-5.04B(6)–20-5.04B(11) Reserved

20-5.04C Construction

Before placing wood mulch, remove plants and weeds to the ground level.

Maintain the planned flow lines, slope gradients, and contours of the job site. Grade the subgrade to a smooth and uniform surface.

Place mulch after the plants have been planted.

Place mulch in the plant basin at the rate described. Mulch must not come in contact with the plant crown and stem.

Place mulch as shown in areas outside of plant basins to a uniform thickness.

Spread mulch from the outside edge of the plant basin to the adjacent edges of shoulders, paving, retaining walls, dikes, edging, curbs, sidewalks, walls, fences, and existing plantings. If the plant is 12 feet or more from the adjacent edges of any of these elements, spread the mulch 6 feet beyond the outside edge of the plant basin.

Do not place mulch within 4 feet of:

1. Flow line of earthen drainage ditches
2. Edge of paved ditches
3. Drainage flow lines

20-5.04D Payment

The payment quantity for wood mulch is the volume measured in the vehicle at the point of delivery.

Add between *plants* and *if* in the 1st sentence of section 20-10.03C(2):

04-20-18

under section 20-3.01C(2)

Add between *prune* and *each* in the 1st paragraph of section 20-10.03C(3):

04-20-18

under section 20-3.01C(2)

^^

21 EROSION CONTROL

04-20-18

Replace the paragraph of section 21-1.01 with:

01-20-17

Section 21-1 includes general specifications for applying permanent erosion control measures.

Replace section 21-2.02C with:

04-20-18

21-2.02C Imported Topsoil

Imported topsoil must:

1. Consist of fertile, friable soil of loamy character that contains organic matter in quantities natural to the region and be capable of sustaining healthy plant life
2. Be free from deleterious substances such as litter, refuse, toxic waste, stones larger than 1 inch in size, coarse sand, heavy or stiff clay, brush, sticks, grasses, roots, noxious weed seed, weeds, and other substances detrimental to plant, animal, and human health

Replace the paragraphs in section 21-2.02K with:

04-20-18

Reserved

Replace the paragraphs in section 21-2.02Q with:

04-20-18

Reserved

07-21-17

Delete *and compost socks* in the 4th paragraph of section 21-2.02R.

Replace the 2nd sentence in the 1st paragraph of section 21-2.03B with:

07-21-17

Apply duff to the edge of the shoulder backing. When shoulder backing is absent, do not apply duff within 3 feet of the edge of pavement.

Replace section 21-2.03C with:

04-20-18

21-2.03C Imported Topsoil

Place imported topsoil after all other earthwork in an area is complete.

Spread imported topsoil to a uniform thickness.

Trackwalk imported topsoil with tracked equipment run perpendicular to slope contours. Water may be used to assist the process but must not cause erosion.

Replace item 3 in the list in the 2nd paragraph of section 21-2.03F with:

07-21-17

Apply seed to the edge of the shoulder backing. When shoulder backing is absent, do not apply seed within 3 feet of the edge of pavement.

Add to the end of the paragraph of section 21-2.03I:

07-21-17

Apply compost to the edge of the shoulder backing. When shoulder backing is absent, do not apply compost within 3 feet of the edge of pavement.

Replace items 2 and 3 in the list in the 2rd paragraph of section 21-2.03Q with:

07-21-17

2. Fasten compost sock to soil surface.
3. Remove sock and stakes if ordered. Cut sock and empty contents in place. This work is change order work.

Add between the 2nd and 3rd paragraphs of section 21-2.04:

07-21-17

The payment quantity for bid items paid for by volume is the volume measured in the vehicle at the point of delivery.

04-20-18

Delete the 4th paragraph of section 21-2.04.

07-21-17

Delete the 5th paragraph of section 21-2.04.

Replace section 21-3 with:

01-20-17

21-3 PERMANENT EROSION CONTROL ESTABLISHMENT WORK

Reserved

^^

DIVISION IV SUBASES AND BASES

23 GENERAL

01-20-17

Replace the headings and paragraphs in section 23 with:

07-15-16

23-1 GENERAL

23-1.01 GENERAL

23-1.01A Summary

Section 23 includes general specifications for constructing subbases and bases.

23-1.01B Definitions

Reserved

23-1.01C Submittals

Submit a QC plan for the types of subbases or bases where described.

23-1.01D Quality Assurance

23-1.01D(1) General

23-1.01D(1)(a) General

Take samples under California Test 125.

23-1.01D(1)(b) Test Result Disputes

You and the Engineer must work together to avoid potential conflicts and to resolve disputes regarding test result discrepancies. Notify the Engineer within 5 business days of receiving the test result if you dispute the test result.

01-20-17

If you or the Engineer dispute each other's test results, submit your test results and copies of paperwork including worksheets used to determine the disputed test results. An independent third party performs referee testing. Before the independent third party participates in a dispute resolution, it must be qualified under AASHTO re:source program and the Department's Independent Assurance Program. The independent third party must have no prior direct involvement with this Contract. By mutual agreement, the independent third party is chosen from:

1. Department laboratory in a district or region not in the district or region the project is located
2. Transportation Laboratory
3. Laboratory not currently employed by you or your material producer

07-15-16

If split acceptance samples are not available, the independent third party uses any available material representing the disputed material for evaluation.

If the independent third party determines the Department's test results are valid, the Engineer deducts the independent third party testing costs from payments. If the independent third party determines your test results are valid, the Department pays the independent third party testing costs.

23-1.01D(2) Quality Control

23-1.01D(2)(a) General

Provide a QC manager when the quantity of subbase or base is as shown in the following table:

QC Manager Requirements

Subbase or base	Requirement
Stabilized soil (sq yd)	≥ 20,000
Aggregate subbases (cu yd)	≥ 20,000
Aggregate bases (cu yd)	≥ 20,000
CTB (cu yd)	≥ 10,000
Lean concrete base (cu yd)	≥ 2,000
Rapid strength concrete base (cu yd)	≥ 1,000
Lean concrete base rapid setting (cu yd)	≥ 1,000
Concrete base (cu yd)	≥ 1,000
Treated permeable bases (cu yd)	≥ 2,000
Reclaimed pavements (sq yd)	≥ 10,000

Provide a testing laboratory to perform quality control tests. Maintain sampling and testing equipment in proper working condition.

You are not entitled to compensation for the suspension of work resulting from noncompliance with quality control requirements, including those identified within the QC plan.

23-1.01D(2)(b) Quality Control Plan

The QC plan must describe the organization and procedures used to:

1. Control the production process
2. Determine if a change to the production process is needed
3. Implement a change

The QC plan must include action and suspension limits and details of corrective action to be taken if any process is outside of those limits. Suspension limits must not exceed specified acceptance criteria.

The QC plan must describe how test results will be submitted including times for sampling and testing for each quality characteristic.

23-1.01D(2)(c) Qualifications

Testing laboratories and testing equipment must comply with the Department's Independent Assurance Program.

Personnel performing sampling and testing must be qualified under the Department's Independent Assurance Program for the sampling and testing performed.

23-1.01D(3) Department Acceptance

Reserved

23-1.02 MATERIALS

Not Used

23-1.03 CONSTRUCTION

Not Used

23-1.04 PAYMENT

Not Used

23-2–23-7 RESERVED

^^

24 STABILIZED SOILS

07-21-17

Add to section 24-1.01C(1):

07-15-16

Submit a stabilized soil quality control plan.

Add to section 24-1.01D(1):

07-15-16

Construct test pads for compaction tests by scraping away material to the depth ordered. If a compaction test fails, corrective action must include the layers of material already placed above the test pad elevation.

Replace section 24-1.01D(2) with:

07-15-16

24-1.01D(2) Quality Control

24-1.01D(2)(a) General

Reserved

24-1.01D(2)(b) Quality Control Plan

Reserved

24-1.01D(2)(c) Qualifications

Reserved

24-1.01D(2)(d) Preparing Basement Material

After preparing an area for soil stabilization, verify the surface grades.

24-1.01D(2)(e) Mixing

Except for clods larger than 1 inch, randomly test the adequacy of the mixing with a phenolphthalein pH indicator solution.

Add to the end of footnote *a* in the table in section 24-1.01D(3):

07-21-17

For cement stabilized soil, see section 24-3.03D.

Replace the 1st paragraph of section 24-1.03C with:

07-15-16

The Engineer orders the application rate as pounds of stabilizing agent per square yard of basement material to be stabilized.

07-15-16

Delete section 24-2.01D(1)(c)

Replace *250* in the 2nd sentence in the 2nd paragraph of section 24-2.01D(2)(c) with:

07-15-16

500

Add to section 24-2.01D(2):

07-15-16

24-2.01D(2)(d) Quality Control Testing

Lime stabilized soil quality control must include testing the quality characteristics at the frequencies shown in the following table:

QC Testing Frequencies

Quality characteristic	Test method	Sampling location	Minimum frequency
Ground surface temperature before adding lime and full depth ground temperature during mixing operations	--	Each temperature location	1 test per 20,000 sq ft, minimum 1 per day
Lime application rate	Calibrated tray or equal	Roadway	1 test per 40,000 sq ft, minimum 2 per day
Gradation on mixed material	California Test 202	Roadway	1 per 500 cu yd, minimum 1 per day
Moisture content	California Test 226	Roadway	1 per 500 cu yd on each layer, each day during mixing and mellowing periods, minimum 1 per day
Relative compaction	California Test 231	Roadway	1 per 500 cu yd on each layer, minimum 1 per day

Replace section 24-3 with:

07-21-17

24-3 CEMENT STABILIZED SOIL

24-3.01 GENERAL

24-3.01A Summary

Section 24-3 includes specifications for constructing CSS by mixing basement material with cement and water.

24-3.01B Definitions

Reserved

24-3.01C Submittals

Submit cement samples under California Test 125. Include the mill analysis.

Submit a certificate of compliance under section 90-1.01C(3).

24-3.01D Quality Assurance

24-3.01D(1) General

24-3.01D(1)(a) General

Stop CSS activities and immediately notify the Engineer if either of the following occurs:

1. Any quality control test result does not comply with the specifications
2. Visual inspection shows noncompliant CSS

If CSS activities are stopped, before resuming activities:

1. Notify the Engineer of the adjustments you will make
2. Reprocess, remedy, or replace the noncompliant CSS until it complies with specifications
3. Construct a 1,000 square yard test strip of CSS demonstrating ability to comply with the specifications
4. Obtain the Engineer's authorization

24-3.01D(1)(b) Preparing Basement Material

For every 1,000 sq yd of basement material to be cement stabilized:

1. Test the relative compaction under California Test 231
2. Test the moisture content under California Test 226

24-3.01D(1)(c) Applying Cement

The Engineer determines the final application rate based on ASTM D1633, Method A, except:

1. Test specimens must be compacted under ASTM D1557, Method A or B.
2. Test specimens must be cured by sealing each specimen with 2 layers of plastic at least 4 mil thick. The plastic must be tight around the specimen. Seal all seams with duct tape to prevent moisture loss. Sealed specimens must be placed in an oven for 7 days at 100 ± 5 degree F. At the end of the curing period, specimens must be removed from the oven and air-cooled. Duct tape and plastic wrap must be removed before capping. Specimens must not be soaked before testing.

The application rate is ordered as pounds of cement per square yard of basement material to be stabilized.

Before applying cement, measure and record the air temperature and in situ moisture content of the basement material to be stabilized.

The Engineer verifies the application rate using a calibrated tray or equal once per 40,000 sq ft of stabilized basement material, or twice per day, whichever is greater.

24-3.01D(2) Quality Control

24-3.01D(2)(a) General

Reserved

24-3.01D(2)(b) Mixing

During mixing operations, measure and record the air temperature for the basement material to be stabilized.

For each day of mixing, test the in-place moisture content under California Test 231, Part 1, Section E and verify moisture content under California Test 226. Sample immediately after mixing.

After mixing, maintain the in-place moisture of the basement material to be stabilized within a range of 1 percent below to 2 percent above the optimum moisture determined under California Test 216. Determine in-place moisture content under California Test 231. During compaction and finish grading, add water to the surface to prevent drying until the next layer of mixed material is placed, or until you apply curing treatment.

24-3.01D(2)(c) Compaction

After compaction, determine in-place wet density under California Test 231 and moisture content under California Test 226, at the same locations. Perform one test per 1,000 sq yd of CSS. Test in 0.50-foot depth intervals from the bottom of the CSS layer regardless of the layer thickness. Convert wet density to dry density and calculate relative compaction under California Test 216 on a dry density basis.

24-3.01D(2)(d) Quality Control Testing

Cement stabilized soil quality control must include testing the quality characteristics at the frequencies shown in the following table:

QC Testing Frequencies

Quality characteristic	Test method	Sampling location	Minimum frequency
Air temperature before adding cement to basement material	--	Each temperature location	1 test per 20,000 sq ft, minimum 1 per day
Moisture content of basement material before adding cement	California Test 226	Roadway	1 per 1000 sq yd per layer, minimum 1 per day
Cement application rate	Calibrated tray or equal	Roadway	1 test per 20,000 sq ft, minimum 2 per day
Gradation on mixed material	California Test 202	Roadway	1 per 1000 sq yd per layer, minimum 1 per day
Moisture content of mixed material	California Test 226	Roadway	1 per 1000 sq yd per layer, minimum 1 per day
Moisture content of compacted material at time of relative compaction testing	California Test 231	Roadway	1 per 1000 sq yd per layer, minimum 1 per day
Relative compaction	California Test 231	Roadway	1 per 1000 sq yd per layer, minimum 1 per day

24-3.02 MATERIALS

Cement must comply with section 90-2.01A, Type II or Type V portland cement.

24-3.03 CONSTRUCTION

24-3.03A General

Remove standing water from the basement material.

Apply cement at air temperatures above 40 degrees F and rising. Do not apply cement to frozen basement material.

During compaction and finish grading, add water to the surface to prevent drying until the next layer of mixed material is placed, or until you apply curing treatment.

Do not scarify surfaces of intermediate or final layers of CSS.

24-3.03B Applying Cement

Apply cement uniformly over the area to be stabilized using a vane spreader.

Do not apply dry cement in windy conditions that will result in dust outside the treatment area.

24-3.03C Mixing

You may mix cement and the basement material off the job site.

Complete initial mixing work within 30 minutes of the application of cement.

After mixing, maintain the in-place moisture of the basement material to be stabilized within a range of 1 percent below to 2 percent above the optimum moisture.

Before compaction, the CSS, except rock, must within the percentage passing limits for the sieve sizes shown in the following table:

Cement Stabilized Soil Gradation

Sieve sizes	Percentage passing
2"	100
3/4"	98-100
No. 4	55-100

24-3.03D Compaction

Complete initial compaction of a layer within 2 hours of initial mixing of cement.

Complete all compaction of a layer within 4 hours of mixing of cement.

Compact the CSS to at least 97 percent relative compaction.

24-3.03E Finish Grading

Maintain the moisture content of the CSS to within a range of 1 percent below and 2 percent above the optimum moisture content through the entire finish grading operation.

Finish rolling of trimmed surfaces must be performed within 2 hours of completion of compacting.

The finished surface of the CSS must not vary more than 0.05 foot above or below the grade established by the Engineer unless the CSS is to be covered by material paid for by the cubic yard, in which case the finished surface may not vary above the grade established by the Engineer.

Fill areas of finished CSS that are lower than the grade established by the Engineer with material specified for the subsequent layer.

24-3.03F Curing

24-3.03F(1) General

Choose the method of curing and apply the chosen cure method on the same day as completing compaction and any trimming and finish grading.

Do not trim CSS after curing.

24-3.03F(2) Subsequent Pavement Layer

For CSS you may cure by placing a subsequent pavement layer over the finished CSS.

You may place subsequent pavement layers any time after finish grading if the CSS is sufficiently stable to support the required construction equipment without marring or permanently distorting the surface.

24-3.04 PAYMENT

The Department does not adjust the unit price for an increase or decrease in cement quantity.

The Department does not pay for subsequent layer material used to fill low areas of cement stabilized soil.

^^

25 AGGREGATE SUBBASES

07-21-17

Add to the beginning of section 25:

07-21-17

25-1 GENERAL

Replace *Reserved* in section 25-1.01C with:

07-15-16

Submit an aggregate subbase QC plan.

Replace *Reserved* in section 25-1.01D(2) with:

07-15-16

25-1.01D(2)(a) General

Reserved

25-1.01D(2)(b) Quality Control Plan

Reserved

25-1.01D(2)(c) Qualifications

Reserved

25-1.01D(2)(d) Quality Control Testing

AS quality control must include testing the quality characteristics at the frequencies shown in the following table:

QC Testing Frequencies

Quality characteristic	Test method	Sampling location	Minimum frequency
R-value	California Test 301	Stockpiles, transportation units, windrows, or roadways	1 test before beginning work and every 2000 cu yd thereafter[a]
Aggregate gradation	California Test 202	Stockpiles, transportation units, windrows, or roadways	1 per 500 cu yd but at least one per day of placement
Sand equivalent	California Test 217	Stockpiles, transportation units, windrows, or roadways	
Relative compaction	California Test 231	Roadway	1 per 500 sq yd on each layer

[a]Additional R-value frequency testing will not be required when the average of 4 consecutive sand equivalent tests is 4 or more above the specified operating range value.

Add between the 2nd and 3rd paragraphs of section 25-1.01D(3):

07-15-16

The Engineer takes aggregate subbase samples for R-value, aggregate gradation, and sand equivalent from any of the following locations:

1. Windrow
2. Roadway

07-15-16

Delete *for each noncompliant test result* in the 4th paragraph of section 25-1.01D(3).

07-15-16

Delete *a* in the 5th paragraph of section 25-1.01D(3).

Add to the end of section 25:

07-21-17

25-2–25-10 RESERVED

^^

26 AGGREGATE BASES

07-21-17

Add to the beginning of section 26:

07-21-17

26-1 GENERAL

Replace *Reserved* in section 26-1.01C with:

07-15-16

Submit an aggregate base QC plan.

Replace *Reserved* in section 26-1.01D(1) with:

07-15-16

Aggregate samples must not be treated with lime, cement, or chemicals before testing for durability index. Aggregate from untreated reclaimed processed AC, PCC, LCB, or CTB is not considered treated.

Replace *Reserved* in section 26-1.01D(2) with:

07-15-16

26-1.01D(2)(a) General

Reserved

26-1.01D(2)(b) Quality Control Plan

Reserved

26-1.01D(2)(c) Qualifications

Reserved

26-1.01D(2)(d) Quality Control Testing

AB quality control must include testing the quality characteristics at the frequencies shown in the following table:

QC Testing Frequencies

Quality characteristic	Test method	Sampling location	Minimum frequency
R-value	California Test 301	Stockpiles, transportation units, windrows, or roadways	1 test before starting work and every 2,000 cu yd thereafter[a]
Aggregate gradation	California Test 202	Stockpiles, transportation units, windrows, or roadways	1 per 500 cu yd but at least one per day of placement
Sand equivalent	California Test 217	Stockpiles, transportation units, windrows, or roadways	
Durability index[b]	California Test 229	Stockpiles, transportation units, windrows, or roadways	1 per project
Relative compaction	California Test 231	Roadway	1 per 500 sq yd on each layer

[a]Additional R-value frequency testing will not be required when the average of 4 consecutive sand equivalent tests is 29 or greater for Class 2 AB or 25 or greater for Class 3 AB.
[b]Applies if section 26-1.02 contains an applicable requirement for durability index

Add between *requirements,* and *and* in the 1st paragraph of section 26-1.01D(3):

07-15-16

durability,

Add between the 2nd and 3rd paragraphs of section 26-1.01D(3):

07-15-16

The Engineer takes aggregate base samples for R-value, aggregate gradation, sand equivalent, and durability index from any of the following locations:

1. Windrow
2. Roadway

07-15-16

Delete the 3rd paragraph of section 26-1.01D(3).

Add to the end of section 26:

07-21-17

26-2–26-10 RESERVED

^^

27 CEMENT TREATED BASES

07-21-17

Add to the beginning of section 27:

07-21-17

27-1 GENERAL

Add to section 27-1.01C:

07-15-16

Submit cement treated base QC plan.

Replace the headings and paragraphs in section 27-1.01D with:

07-15-16

27-1.01D Quality Assurance

27-1.01D(1) General

After the CTB has been spread on the subgrade and before initial compaction, the cement content of the completed mixture of CTB must not vary from the specified cement content by more than 0.6 percent of the weight of the dry aggregate when tested under California Test 338.

For Class A CTB, compaction is tested under California Test 312 or 231.

The relative compaction of CTB must be at least 95 percent. Each layer of CTB may be tested for compaction, or all layers may be tested together at the option the Engineer. If all layers are tested together, you are not relieved of the responsibility to achieve the required compaction in each layer placed.

27-1.01D(1)(a) Aggregate

When tested under California Test 301, aggregate for Class B CTB must have (1) an R-value of at least 60 before mixing with cement and (2) an R-value of at least 80 when aggregate is mixed with an amount of cement that does not exceed 2.5 percent by weight of the dry aggregate.

Before sand equivalent testing, aggregate samples must not be treated with lime, cement, or chemicals.

If the aggregate gradation test results, the sand equivalent test results, or both comply with contract compliance requirements but not operating range requirements, you may continue placing CTB for the remainder of the work day. Do not place additional CTB until you demonstrate to the Engineer that the CTB to be placed complies with the operating range requirements.

If the aggregate gradation test results, sand equivalent test results, or both do not comply with contract compliance requirements, remove the CTB or request a payment deduction. If your request is authorized, $2.50/cu yd is deducted. If CTB is paid for by weight, the Engineer converts tons to cubic yards for the purpose of reducing payment for noncompliant CTB left in place. An aggregate gradation and a sand equivalent test represents up to (1) 500 cu yd or (2) 1 day's production if less than 500 cu yd.

27-1.01D(1)(b) Road-Mixed Cement Treated Base Moisture Content

Just before initial compaction the moisture content of the completed mixture must be at least the optimum moisture content less 1 percent. The moisture content is determined under California Test 226 and optimum moisture content is determined under California Test 312.

27-1.01D(1)(c) Plant-Mixed Cement Treated Base Moisture Content

At the point of delivery to the work, the moisture content of the completed mixture must be at least the optimum moisture content less 1 percent. The moisture content is determined under California Test 226 and optimum moisture content under California Test 312.

27-1.01D(2) Quality Control

27-1.01D(2)(a) General

Reserved

27-1.01D(2)(b) Quality Control Plan

Reserved

27-1.01D(2)(c) Qualifications

Reserved

27-1.01D(2)(d) Quality Control Testing

CTB quality control must include testing the quality characteristics at the frequencies shown in the following table:

QC Testing Frequencies

Quality characteristic	Test method	Sampling location	Minimum frequency
Aggregate gradation	California Test 202 modified	Stockpiles, plant, transportation units, windrow, or roadway	1 per 500 cu yd but at least one per day of placement
Sand equivalent	California Test 217	Stockpiles, plant, transportation units, windrow, or roadway	
R-value[a]	California Test 301	Stockpiles, plant, transportation units, windrows, or roadway	1 test before starting work and every 2000 cu yd thereafter[b]
Optimum moisture content	California Test 312	Plant, transportation units, windrow, or roadway	1 per day of placement
Moisture content	California Test 226	Roadway	1 per 500 cu yd but at least one per day of placement
Cement content	California Test 338	Windrows or roadway	1 per 1000 cu yd but at least one per day of placement
Relative compaction	California Test 312 or 231	Roadway	1 per 2000 sq yd but at least one per day of placement
Compressive strength[c]	California Test 312	Windrow or roadways	1 per day of placement

[a]R-value is required for Class B CTB only
[b]Additional R-value frequency testing will not be required while the average of 4 consecutive sand equivalent tests is 4 or more above the specified operating range value.
[c]Compressive strength is required for Class A CTB only when specified

27-1.01D(3) Department Acceptance

The Department's acceptance testing includes testing the CTB quality characteristics shown in the following table:

CTB Requirements for Acceptance

Quality characteristic	Test method
Aggregate gradation	California Test 202 modified
Sand equivalent	California Test 217
R-value[a]	California Test 301
Optimum moisture content	California Test 312
Moisture content	California Test 226
Cement content	California Test 338
Relative compaction	California Test 312 or 231
Compressive strength[b]	California Test 312

[a]R-value is required for Class B CTB only
[b]Compressive strength is required for Class A CTB only when specified

The Engineer takes samples for aggregate gradation and sand equivalent from any of the following locations:

1. Plant
2. Truck
3. Windrow, for road-mixed only
4. Roadbed, for road-mixed only

Add to section 27-1.02:

07-15-16

Water must comply with section 90-1.02D.

Add to section 27-1.03F:

07-15-16

The relative compaction of CTB must be at least 95 percent.

Add to the end of section 27:

07-21-17

27-2–27-10 RESERVED

^^

28 CONCRETE BASES

07-15-16

Replace the headings and paragraphs in section 28-1.01D with:

07-15-16

28-1.01D Quality Assurance

28-1.01D(1) General

Aggregate samples must not be treated with lime, cement, or chemicals before testing for sand equivalent.

Stop concrete base activities and immediately notify the Engineer whenever:

1. Any QC or QA test result does not comply with the specifications
2. Visual inspection shows a noncompliant concrete base

If concrete base activities are stopped, before resuming activities:

1. Notify the Engineer of the adjustments you will make
2. Remedy or replace the noncompliant concrete base
3. Field qualify or construct a new test strip as specified for the concrete base involved to demonstrate compliance with the specifications
4. Obtain authorization

28-1.01D(2) Quality Control

28-1.01D(2)(a) General

Reserved

28-1.01D(2)(b) Quality Control Plan

Reserved

28-1.01D(2)(c) Qualifications

Reserved

28-1.01D(3) Department Acceptance

Reserved

Add to section 28-2.01C(1):

07-15-16

Submit a lean concrete base QC plan.

Replace the headings and paragraphs in section 28-2.01D with:

07-15-16

28-2.01D Quality Assurance

28-2.01D(1) General

28-2.01D(1)(a) General

The molds for compressive strength testing under ASTM C31 or ASTM C192 must be 6 by 12 inches.

If the aggregate gradation test results, sand equivalent test results or both comply with the contract compliance requirements but not the operating range requirements, you may continue placing LCB for the remainder of the work day. Do not place additional LCB until you demonstrate the LCB to be placed complies with the operating range requirements.

28-2.01D(1)(b) Qualifications

Field qualification tests and calculations must be performed by an ACI certified "Concrete Laboratory Technician, Grade I.

28-2.01D(1)(c) Aggregate Qualification Testing

Qualify the aggregate for each proposed aggregate source and gradation. The qualification tests include (1) a sand equivalent and (2) an average 7-day compressive strength under ASTM C39 of 3 cylinders manufactured under ASTM C192 except cure cylinders in molds without lids after initial curing.

For the compressive strength test, the cement content for each cylinder must be 300 lb/cu yd. The 7-day average compressive strength must be at least 610 psi. The cement must be Type II portland cement.

LCB must have from 3 to 4 percent air content during aggregate qualification testing.

28-2.01D(1)(d) Field Qualification Testing

Before placing LCB, you must perform field qualification testing and obtain authorization for each mix design. Retest and obtain authorization for changes to the authorized mix designs.

Notify the Engineer at least 5 business days before field qualification. Perform the field qualification at the job site or an authorized location.

Field qualification testing includes tests for compressive strength, air content, and penetration or slump.

For compressive strength field qualification testing:

1. Prepare 12 cylinders under ASTM C31 except final cure cylinders in molds without lids from a single batch.
2. Perform 3 tests; each test consists of determining the average compressive strength of 2 cylinders at 7 days under ASTM C39. The average compressive strength for each test must be at least 530 psi

If you submitted a notice to produce LCB qualifying for a transverse contraction joint waiver, manufacture additional specimens and test the LCB for compressive strength at 3 days. Prepare the compressive strength cylinders under ASTM C31 except final cure cylinders in molds without lids at the same time using the same material and procedures as the 7-day compressive strength cylinders except do not submit 6 additional test cylinders. The average 3-day compressive strength for each test must be not more than 500 psi.

28-2.01D(2) Quality Control

28-2.01D(2)(a) General

Reserved

28-2.01D(2)(b) Quality Control Manager

Reserved

28-2.01D(2)(c) Quality Control Testing

Test the LCB under the test methods and at the locations and frequencies shown in the following table:

LCB Sampling Location and Testing Frequencies

Quality characteristic	Test method	Sampling location	Minimum sampling and testing frequency
Sand equivalent	ASTM D2419	Source	1 per 500 cubic yards but at least 1 per day of production
Aggregate gradation	ASTM C136		
Air content	ASTM C231	Job site	
Penetration[a]	ASTM C360		
Slump[a]	ASTM C143		
Compressive strength	ASTM C39 [b]		

[a]Test for either penetration or slump
[b]Prepare cylinders under ASTM C31 except final cure cylinders in molds without lids.

28-2.01D(3) Department Acceptance

The Department accepts LCB based on compliance with the requirements shown in the following table:

LCB Requirements for Acceptance

Quality characteristic	Test method	Requirement
Compressive strength (min, psi at 7 days)	ASTM C39 [a]	530 [b]

[a] Cylinders prepared under ASTM C31 except final cure cylinders in molds without lids.
[b] A compressive strength test represents up to (1) 1,000 cu yd or (2) 1 day's production if less than 1,000 cu yd.

Replace *section 28-2.01D(4)* in item 3 of the 5th paragraph in section 28-2.03D with:

07-15-16

section 28-2.01D(1)(c)

Replace the 1st paragraph in section 28-2.03F with:

07-15-16

After finishing LCB, cure LCB with pigmented curing compound under section 90-1.03B(3) and 40-1.03I. Apply curing compound:

1. In 2 separate applications
2. Before the atmospheric temperature falls below 40 degrees F
3. At a rate of 1 gal/150 sq ft for the first application
4. At a rate of 1 gal/200 sq ft for the second application

Replace *Reserved* in section 28-3.01C(3) with:

07-15-16

Submit a rapid strength concrete base QC plan.

Replace the headings and paragraphs in section 28-3.01D with:

07-15-16

28-3.01D Quality Assurance

28-3.01D(1) General

28-3.01D(1)(a) General

At the preconstruction meeting be prepared to discuss the project specifications and methods of performing each item of work. Items discussed must include the processes for:

1. Production
2. Transportation
3. Placement
4. QC plan, if specified in the special provisions
5. Contingency plan
6. QC sampling and testing
7. Acceptance criteria

Beams for modulus of rupture testing must be fabricated and tested under California Test 524. The beams may be fabricated using an internal vibrator under ASTM C31. For each test, 3 beam must be fabricated and the test results averaged. No single test represents more than that day's production or 130 cu yd, whichever is less.

For early age testing, beams must be cured so the monitored temperatures in the beams and the test strip are always within 5 degrees F. The internal temperatures of the RSC base and early age beams must be monitored and recorded at intervals of at least 5 minutes. Thermocouples or thermistors connected to strip-chart recorders or digital data loggers must be installed to monitor the temperatures. Temperature recording devices must be accurate to within ±2 degrees F. Until early age testing is completed, internal temperatures must be measured at 1 inch from the top, 1 inch from the bottom, and no closer than 3 inches from any edge.

For other age testing, beams must be cured under California Test 524 except beams must be placed into sand at a time that is the earlier of either from 5 to 10 times the final set time, or 24 hours.

RSC base must have an opening age modulus of rupture of not less than 400 psi and a 7-day modulus of rupture of not less than 600 psi.

28-3.01D(1)(b) Preconstruction Meeting

Reserved

28-3.01D(1)(c) Test Strip

Reserved

28-3.01D(2) Quality Control

28-3.01D(2)(a) General

Reserved

28-3.01D(2)(b) Quality Control Manager

Reserved

28-3.01D(2)(c) Quality Control Testing

Test the rapid strength concrete base under the test methods and at the locations and frequencies shown in the following table:

Rapid Strength Concrete Base Sampling Location and Testing Frequencies

Quality characteristic	Test method	Sample Location	Minimum testing frequency[a]
Cleanness value	California Test 227	Source	1 per 500 cubic yards but at least 1 per shift
Sand equivalent	California Test 217		
Aggregate gradation	California Test 202		
Air content	California Test 504	Job site	1 per 130 cu yd but at least 1 per shift
Yield	California Test 518		1 per shift
Slump or penetration	ASTM C143 or California Test 533		1 per 2 hours of placement
Density	California Test 518		1 per shift
Aggregate moisture meter calibration[b]	California Test 223 or California Test 226		1 per shift
Modulus of rupture	California Test 524		1 per 130 cu yd but at least 1 per shift

[a]Test at the most frequent interval.
[b]Check calibration of the plant moisture meter by comparing moisture meter readings with California Test 223 or California Test 226 test results.

Notify the Engineer at least 2 business days before any sampling and testing. Submit testing results within 15 minutes of testing completion. Record inspection, sampling, and testing on the forms accepted with the QC plan and submit them within 48 hours of completion of each day of production and within 24 hours of 7-day modulus of rupture tests.

During the placement of RSC base, fabricate beams and test for the modulus of rupture:

1. At opening age
2. At 7 days after placing the first 30 cu yd
3. At least once every 130 cu yd
4. Within the final truckload

Opening age tests must be performed in the presence of the Engineer.

28-3.01D(3) Department Acceptance

The Department accepts RSC base based on compliance with the requirements shown in the following table:

RSC Base Requirements for Acceptance

Quality characteristic	Test method	Requirement
Modulus of rupture (min, psi at 7 days)	California Test 524	600

The Engineer adjust payment for RSC base for the 7-day modulus of rupture as follows:

1. Payment for a base with a modulus of rupture of 600 psi or greater is not adjusted.
2. Payment for a base with a modulus of rupture of less than 600 and greater than or equal to 550 psi is reduced by 5 percent.
3. Payment for a base with a modulus of rupture of less than 550 and greater than or equal to 500 psi is reduced by 10 percent.
4. Payment for a base with a modulus of rupture of less than 500 psi is not adjusted and no payment is made. Remove and replace this base.

Add to section 28-4.01C(1):

07-15-16

Submit a lean concrete base rapid setting QC plan.

Replace the headings and paragraphs in section 28-4.01D with:

07-15-16

28-4.01D Quality Assurance

28-4.01D(1) General

28-4.01D(1)(a) General

For compressive strength testing, prepare 6 cylinders under California Test 540. Test cylinders must be 6 by 12 inches. As an alternative to rodding, a vibrator may be used under California Test 524. Test cylinders under California Test 521 and perform 3 tests with each test consisting of 2 cylinders. The test result is the average from the 2 cylinders.

28-4.01D(1)(b) Field Qualification

Before placing lean concrete base rapid setting, you must perform field qualification testing and obtain authorization for each mix design. Retest and obtain authorization for changes to authorized mixed designs.

Proposed mix designs must be field qualified before you place the base represented by those mix designs. The technician performing the field test must hold current ACI certification as a Concrete Field Testing Technician-Grade I.

Notify the Engineer at least 5 days before field qualification. Perform field qualification within the job site or a location authorized.

Field qualification testing includes compressive strength, air content, and penetration or slump in compliance with the table titled "Lean Concrete Base Rapid Setting Requirements."

Field qualification must comply with the following:

1. Test for compressive strength at opening age and 7 days of age
2. At opening age, the compressive strength for each test must be at least 180 psi and the average strength for the 3 tests must be at least 200 psi
3. At 7 days age, the compressive strength for each test must be at least 600 psi and the average strength for the 3 tests must be at least 725 psi

28-4.01D(2) Quality Control

28-4.01D(2)(a) General

Reserved

28-4.01D(2)(b) Quality Control Manager

Reserved

28-4.01D(2)(c) Quality Control Testing

Test the base under the test methods and at the locations and frequencies shown in the following table:

LCB Rapid Setting Sampling Location and Testing Frequencies

Quality characteristic	Test method	Sampling location	Minimum sampling and testing frequency
Sand equivalent	ASTM D2419	Source	1 per 500 cu yd, minimum 1 per day of production
Aggregate gradation	ASTM C136		
Air content	ASTM C231	Job site	1 per 4 hours of placement work, plus one in the last hour of placement work
Penetration[a]	ASTM C360		
Slump[a]	ASTM C143		
Compressive strength	California Test 521		

[a]Test either penetration or slump

During placement of lean concrete base rapid setting, fabricate cylinders and test compressive strength for opening age and 7 days. Opening age tests must be performed in the presence of the Engineer.

28-4.01D(3) Department Acceptance

The Department accepts LCB rapid setting based on compliance with the requirement shown in the following table:

LCB Rapid Setting Requirements for Acceptance

Quality characteristic	Test method	Requirement
Compressive strength (min, psi at 7 days)	California Test 521[a]	725

[a]Cylinders made under California Test 540

Replace the 2nd and 3rd paragraphs in section 28-4.03A with:

07-15-16

Concrete paving operations with equipment not supported by the base may start before opening age. Do not open pavement for traffic before opening age of the LCB rapid setting.

Any other paving operations must start after the final set time of the base. The base must have a compressive strength of at least 450 psi under California Test 521 before:

1. Placing HMA
2. Placing other base material
3. Operating equipment on the base

Replace *Reserved* in section 28-5.01C with:

07-15-16

Submit a concrete base QC plan.

Replace the headings and paragraphs in section 28-5.01D(2) with:

07-15-16

28-5.01D(2) Quality Control

28-5.01D(2)(a) General

Reserved

28-5.01D(2)(b) Quality Control Manager

Reserved

28-5.01D(2)(c) Quality Control Testing

Test the concrete base under the test methods and at the locations and frequencies shown in the following table:

Concrete Base Sampling Location and Testing Frequencies

Quality characteristic	Test method	Sample location	Minimum testing frequency[a]
Cleanness value	California Test 227	Source	1 per 500 cubic yards but at least 1 per shift
Sand equivalent	California Test 217		
Aggregate gradation	California Test 202		
Air content	California Test 504	Job site	1 per 500 cu yd but at least 1 per shift
Yield	California Test 518		1 per shift
Slump or penetration	ASTM C143 or California Test 533		1 per 2 hours of placement
Density	California Test 518		1 per shift
Aggregate moisture meter calibration[b]	California Test 223 or California Test 226		1 per shift
Modulus of rupture	California Test 524		1 per 500 cu yd but at least 1 per shift

[a]Test at the most frequent interval.
[b]Check calibration of the plant moisture meter by comparing moisture meter readings with California Test 223 or California Test 226 test results.

28-5.01D(3) Department Acceptance

The Department accepts a concrete base based on compliance with the requirements shown in the following table:

Concrete Base Requirements for Acceptance

Quality characteristic	Test method	Requirement
Modulus of rupture (min, psi at 28 days)	California Test 523	570

Acceptance for the modulus of rupture is on a lot basis. The Department provides the molds and machines for the modulus of rupture acceptance testing. Provide any material and labor the Engineer may require for the testing.

^^

29 TREATED PERMEABLE BASES

07-15-16

Replace the headings and paragraphs in section 29-1.01 with:

07-15-16

29-1.01 GENERAL

29-1.01A Summary

Section 29-1 includes general specifications for constructing treated permeable bases.

29-1.01B Definitions

Reserved

29-1.01C Submittals

Submit a treated permeable base quality control plan.

29-1.01D Quality Assurance

29-1.01D(1) General

Reserved

29-1.01D(2) Quality Control

29-1.01D(2)(a) General

Reserved

29-1.01D(2)(b) Quality Control Plan

Reserved

29-1.01D(2)(c) Qualifications

Reserved

29-1.01D(3) Department Acceptance

Reserved

Replace the headings and paragraphs in section 29-2.01D with:

07-15-16

29-2.01D Quality Assurance

29-2.01D(1) General

The Engineer determines the asphalt content of the asphalt mixture under California Test 382. The bitumen ratio, pounds of asphalt per 100 lb of dry aggregate, must not vary more than 0.5 lb of asphalt above or below the quantity designated by the Engineer. Samples used to determine the bitumen ratio are obtained from trucks at the plant or from the mat behind the paver before rolling. If the sample is taken from the mat behind the paver, the bitumen ratio must not be less than the quantity designated by the Engineer, less 0.7 lb of asphalt per 100 lb of dry aggregate.

29-2.01D(2) Quality Control

29-2.01D(2)(a) General

Reserved

29-2.01D(2)(b) Quality Control Testing

ATPB quality control must include testing the quality characteristics at the frequencies shown in the following table:

QC Testing Frequencies

Quality characteristic	Test method	Sampling location	Minimum frequency
Gradation	California Test 202	Stockpiles or plant	1 for every 4 hours of production but at least one per day of placement
Cleanness value	California Test 227	Stockpiles or plant	1 for every 4 hours of production but at least one per day
Percentage of crushed particles	California Test 205	Stockpiles or plant	1 test before production and one every 5,000 cu yd thereafter
Los Angeles rattler loss at 500 rev	California Test 211	Stockpiles or plant	1 test before production and one every 5,000 cu yd thereafter
Film stripping	California Test 302	Plant	1 test before production and one every 5000 cu yd thereafter
Asphalt content of the asphalt mixture	California Test 382	Plant, transportation units, windrows, or roadway	1 for every 4 hours of production but at least one per day

29-2.01D(3) Department Acceptance

The Department accepts ATPB based on aggregate gradation, cleanness value, percent of crushed particles, Los Angeles rattler, film stripping and asphalt content requirements specified in section 29-2.02 and section 29-2.01D(1).

The Engineer takes samples for aggregate gradation, cleanness value, percent of crushed particles, Los Angeles rattler, and film stripping from the plant.

The Engineer takes samples for asphalt content of the asphalt mixture from any of the following locations:

1. Plant
2. Truck
3. Windrow
4. Roadbed

Replace the headings and paragraphs in section 29-3.01 with:

07-15-16

29-3.01 GENERAL

29-3.01A Summary

Section 29-3 includes specifications for constructing cement treated permeable bases.

29-3.01B Definitions

Reserved

29-3.01C Submittals

Reserved

29-3.01D Quality Assurance

29-3.01D(1) General

Reserved

29-3.01D(2) Quality Control

29-3.01D(2)(a) General

Reserved

29-3.01D(2)(b) Quality Control Testing

CTPB quality control must include testing the quality characteristics at the frequencies shown in the following table:

QC Testing Frequencies

Quality characteristic	Test method	Sampling location	Minimum frequency
Gradation	California Test 202	Stockpiles or plant	1 for every 4 hours of production but at least one per day of placement
Cleanness value	California Test 227	Stockpiles or plant	1 for every 4 hours of production but at least one per day
Los Angeles rattler loss at 500 rev	California Test 211	Stockpiles or plant	1 test before production and one every 5,000 cu yd thereafter
Soundness	California Test 214	Stockpiles or plant	1 test before production and one every 5,000 cu yd thereafter

29-3.01D(3) Department Acceptance

The Department accepts CTPB based on aggregate gradation, cleanness value, Los Angeles rattler and soundness requirements in section 29-3.02.

The Engineer takes samples for aggregate gradation, cleanness value, Los Angeles rattler and soundness from the plant.

Add to section 29-3.02A:

07-15-16

Water must comply with section 90-1.02D.

Replace *3rd* in the 2nd paragraph in section 29-3.03 with:

07-15-16

4th

^^

30 RECLAIMED PAVEMENT

07-15-16

Replace *section 30-1.01C(2)(c)* in the 1st paragraph of section 30-3.01C(2)(c) with:

07-15-16

section 30-1.01C(3)(c)

Replace the table in section 30-3.02A with:

07-15-16

FDR—Foamed Asphalt Quality Characteristic Requirements

Quality characteristic	Test method	Requirement
Moisture content before HMA paving	California Test 226	< 50% of OMC
Asphalt binder expansion ratio (min, %)	Note a	10
Asphalt binder half-life (seconds, min)		12
Gradation (%, passing) Sieve Size: 3 inch 2 inch 1-1/2 inch	California Test 202	 100 95–100 85–100
Moisture content Maximum Minimum	California Test 226	 OMC OMC - 2%
In-place wet density (lb/cu ft)	California Test 216	Report only
Relative compaction (min, %)	California Test 231	98
Indirect dry tensile strength (psi)[b]	California Test 371	90% of mix design value
Indirect wet tensile strength (psi)[b]	California Test 371	90% of mix design value
Tensile strength ratio (%)	California Test 371	90% of mix design value

[a]Test at the foaming temperature and percentage of foaming water by dry weight of FDR—foamed asphalt material designated in the mix design. To test asphalt binder expansion ratio and half-life, use a pail of known volume and a dipstick calibrated for the pail. From the inspection nozzle on the asphalt binder spray bar, inject foamed asphalt into the pail without exceeding the pail's capacity. With the dipstick, immediately measure and record the level of foamed asphalt in the pail. Record the half-life in seconds from the time the injection of foamed asphalt in the pail is turned off to half the dip stick reading after peak. Calculate the expansion ratio as the volume of the foamed asphalt upon injection divided by the volume of the unfoamed asphalt binder.
[b]From material passing the 1-inch sieve, compact 6 specimens under California Test 304, Part 2. Cure the specimens at 100 °F for 72 hours and allow the specimens to cool to room temperature. Test 3 specimens for dry tensile strength under California Test 371. Test 3 specimens for wet tensile strength under California Test 371 after moisture conditioning.

Replace *section 30-4.01D(3)* in the 2nd paragraph of section 30-4.01D(1) with:

07-15-16

section 30-4.01D(4)

Replace *section 30-4.01D(1)(a)* in the table in section 30-4.02A with:

07-15-16

section 30-4.01D(2)

^^

DIVISION V SURFACINGS AND PAVEMENTS

36 GENERAL

04-20-18

Replace section 36-3 with:

07-21-17

36-3 PAVEMENT SMOOTHNESS

36-3.01 GENERAL

36-3.01A Summary

Section 36-3 includes specifications for measuring the smoothness of pavement surfaces.

36-3.01B Definitions

area of localized roughness: Moving average of the International Roughness Index values for each wheel path using a 25-foot continuous interval and a 250-mm filter.

Mean Roughness Index: Average of the International Roughness Index values for the left and right wheel paths for the same traffic lane using a fixed interval and a 250-mm filter.

wheel paths: Pair of lines 3 feet from and parallel to the edges of a traffic lane. Left and right wheel paths are based on the direction of travel.

36-3.01C Submittals

36-3.01C(1) General

Reserved

36-3.01C(2) Inertial Profiler Certification

At least 5 business days before starting initial profiling or changing the inertial profiler or operator, submit:

1. Inertial profiler certification issued by the Department
2. Operator certification for the inertial profiler issued by the Department
3. Manufacturer's instructions and test procedures for calibration and verification of the inertial profiler

Within 2 business days after cross-correlation testing, submit a ProVAL profiler certification analysis report for the test results to the Engineer and to the electronic mailbox address smoothness@dot.ca.gov.

36-3.01C(3) Inertial Profiler Data

36-3.01C(3)(a) General

04-20-18

At least 15 days before inertial profiling, you must register with the Department's secure file sharing system. To obtain information on the registration process, send an e-mail with your contact information to smoothness@dot.ca.gov.

Within 2 business days after each day of profiling, submit the profile information to the Engineer and to the Department's secure file sharing system. After submitting the profile information to the Department's file sharing system, send a notification of your electronic submittal to the Engineer and to the above electronic mailbox address with the names of the files submitted.

For each surface with inertial profile smoothness requirements, the profiling information must include:

1. Raw profile data for each lane
2. ProVAL ride quality analysis report for the Mean Roughness Index of each lane in a PDF file. Report the following:
   - 2.1. Listing of Mean Roughness Index values for 0.1-mile segments or portions thereof
   - 2.2. Inputs, including the specified Mean Roughness Index threshold and fixed segment length
   - 2.3. Raw profile data name selections
   - 2.4. Areas exempt from inertial profile smoothness
3. ProVAL ride quality analysis report for the International Roughness Index of the left and right wheel paths of each lane in a PDF file. Report the following:
   - 3.1. Listing of areas of localized roughness

3.2. Inputs, including the specified area of the localized roughness threshold and continuous segment length
3.3. Raw profile data name selections
3.4. Areas exempt from inertial profile smoothness

4. GPS data file for each lane. Submit the data file in GPS eXchange file format.
5. Manufacturer's recommended calibration and verification test results for the inertial profiler.
6. Inertial profiler's calibration and verification test results, including results for bounce, block, and the distance measurement instrument.
7. Completed Pavement Smoothness Inertial Profiler Submittal Record.

Submit Asphalt Concrete Pavement Smoothness Corrections Information or Concrete Pavement Smoothness Corrections Information with your final profiling information submittal.

Submit the raw profile data in an unfiltered electronic pavement profile file format. Use the following file-naming convention:

YYYYMMDD_TTCCCRRR_EA_D_L_W_B_E_X_PT.PPF

where:

YYYY = year

MM = month, leading zero

DD = day of month, leading zero

TT = district, leading zero

CCC = county, 2- or 3-letter abbreviation as shown in section 1-1.08

RRR = route number with no leading zeros

EA = Contract number, excluding the district identification number, expressed as 6 characters

D = traffic direction, *NB*, *SB*, *WB*, or *EB*

L = lane number from left to right in the direction of travel

W = wheel path, *L* for left, *R* for right, or *B* for both

B = beginning station to the nearest foot, such as 10+20, or beginning post mile to the nearest hundredth, such as 25.06 with no leading zero

E = ending station to the nearest foot, such as 14+20, or ending post mile to the nearest hundredth, such as 28.06 with no leading zero

X = profile operation, *EXIST* for existing pavement, *INTER* for after prepaving smoothness correction, *MILL* for after milling, *PAVE* for after paving, and *CORR* for after final surface pavement correction, and FINAL for completed pavement documentation of compliance.

PT = type of pavement surface profiled, such as Type A HMA, RHMA-G, OGFC, JPCP, or CRCP

If you are submitting multiple inertial profiler data files, compress the files into a .ZIP file format and submit them using the file-naming convention TT_EA_X_YYYYMMDD.zip.

07-21-17

36-3.01C(3)(b) Smoothness Corrective Grinding Plan

At least 2 business days before performing corrective grinding for areas of localized roughness or areas exceeding the specified thresholds for the Mean Roughness Index, submit a corrective grinding plan as an informational submittal.

The corrective grinding plan must include:

1. Grinder manufacturer make and model

2. Grinder wheelbase in feet, measured from the front centerline to the back centerline of the single wheel or tandem wheel spread
3. Grinder head position in feet, measured relative to the centerline of the front single wheel or the front tandem wheel spread
4. Tandem wheel spreads in feet, for rear and front wheels as applicable
5. Tabular listing of the planned corrective grinding, including:
    5.1. Start and stop locations in stationing to the nearest foot
    5.2. Width of grind, such as left half lane, right half lane, or full width lane
    5.3. Corresponding grinder head depths to the nearest 0.01 inch
    5.4. Direction of grind, up to 2 passes per grind location, such as forward, reverse, forward-forward, reverse-reverse, forward-reverse, reverse-forward
    5.5. Distance from start or stop locations to the nearest semipermanent reference point
6. Forecasted improvement in terms of the Mean Roughness Index and area of localized roughness values

36-3.01C(4) Straightedge Measurements

Within 2 business days of measuring smoothness with a straightedge, submit a list of the areas requiring smoothness correction or a report stating there are no areas requiring smoothness correction. Identify the areas requiring smoothness correction by:

1. Location number
2. District-County-Route
3. Beginning station or post mile to the nearest 0.01 mile
4. For correction areas within a traffic lane:
    4.1. Lane direction, *NB, SB, EB*, or *WB*
    4.2. Lane number from left to right in the direction of travel
    4.3. Wheel path, *L* for left, *R* for right, or *B* for both
5. For correction areas not within a traffic lane:
    5.1. Identify the pavement area, such as shoulder, weigh station, or turnout
    5.2. Direction and distance from the centerline, *L* for left or *R* for right
6. Estimated size of correction area

36-3.01D Quality Assurance

36-3.01D(1) General

Reserved

36-3.01D(2) Certifications

The inertial profiler must display a current certification decal showing the expiration date.

The operator must be certified for each model of inertial profiler operated.

The certifications issued by the Department for the inertial profiler and operator must not be more than 12 months old.

36-3.01D(3) Quality Control

36-3.01D(3)(a) General

Reserved

36-3.01D(3)(b) Smoothness

36-3.01D(3)(b)(i) General

Test pavement smoothness using an inertial profiler except use a 12-foot straightedge for the pavement at:

1. Traffic lanes less than 1,000 feet in length, including ramps, turn lanes, and acceleration and deceleration lanes
2. Horizontal curves with a centerline radius less than the following and within the superelevation transition of such curves:
    2.1. 150 feet for asphalt concrete pavements
    2.2. 300 feet for Portland cement concrete pavements

3. Areas within 12.5 feet of manholes
4. Shoulders
5. Weigh-in-motion areas
6. Miscellaneous areas such as medians, gore areas, turnouts, and maintenance pullouts

Where inertial profiler testing is required:

1. Determine the pavement smoothness for each traffic lane by obtaining the International Roughness Index for the left and right wheel paths in an individual lane
2. Determine the Mean Roughness Index and areas of localized roughness using FHWA's engineering software ProVAL

Where OGFC is required, test the pavement smoothness of the final HMA or concrete pavement surface before placing OGFC and after placing OGFC.

36-3.01D(3)(b)(ii) Inertial Profiler Calibration and Verification Tests

Notify the Engineer at least 2 business days before performing calibration and verification testing of the inertial profiler.

Conduct the following calibration and verification tests in the Engineer's presence each day before profiling:

1. Block test to verify the accuracy of the height sensor under California Test 387
2. Bounce test to verify the combined accuracy of the height sensor and accelerometer under California Test 387
3. Distance measurement instrument test to verify the accuracy of the distance measuring instrument under California Test 387
4. Manufacturer's recommended tests

Conduct a cross-correlation verification test of the inertial profiler in the Engineer's presence before performing the initial profiling. A verification test must be performed at least annually. Conduct 5 repeat runs of the inertial profiler on an authorized test section. The test section must be a 0.1-mile segment of existing concrete pavement if you are measuring new concrete pavement or existing asphalt concrete pavement if you are measuring new asphalt concrete pavement. Where micro-milled asphalt concrete surfaces are to be measured, the cross-correlation verification test may be performed on the initial 0.1-mile section of milled asphalt concrete surface. Calculate a cross-correlation to determine the repeatability of your device under California Test 387 using a ProVAL profiler certification analysis with a 3-foot maximum offset. The cross-correlation must be a minimum of 0.92.

36-3.01D(3)(b)(iii) Performing, Analyzing, and Collecting Data

Operate the inertial profiler under the manufacturer's instructions and AASHTO R 57 at 1-inch recording intervals using a minimum 4-inch line laser sensor.

Establish semipermanent reference points for aligning inertial profiler runs and locating potential corrective grinding. Place semipermanent reference points at a frequency of 0.5 mile or less along the edge of the traffic lane or roadway. Maintain semipermanent reference points until Department acceptance testing is completed.

Collect profiling data under AASHTO R 57 and analyze it using 250 mm and International Roughness Index filters.

While collecting the profile data to determine the International Roughness Index values, record semipermanent reference points and the beginning and end of the following locations in the raw profile data:

1. Bridge approach slabs
2. Bridges
3. Culverts visible on the roadway surface
4. Railroad crossings
5. At-grade intersections
6. Project limits

7. Change in pavement type

Profile the left and right wheel paths of each lane.

Determine the Mean Roughness Index for 0.1-mile fixed sections using the ProVAL ride quality analysis with a 250 mm filter. Calculate the Mean Roughness Index of each lane. A partial section equal or less than 0.05-mile length is to be included with the previous or the subsequent segment forming up to a 0.15-mile length. A partial section greater than 0.05 mile, but less than 0.10 mile, is a separate segment. Sections must comply with the Mean Roughness Index specifications for a full section. A weighted average calculation will be used for those partial sections that have been combined with previous or subsequent segments.

Determine the areas of localized roughness using ProVAL with the average International Roughness Index values for each wheel path using a 25-foot continuous interval and a 250 mm filter.

36-3.01D(4) Department Acceptance

The Department accepts pavement surfaces for smoothness based on compliance with the smoothness specifications for the type of pavement surface specified.

For areas that require pavement smoothness determined using a 12-foot straightedge, the pavement surface must not vary from the lower edge of the straightedge by more than:

1. 0.01 foot when the straightedge is laid parallel with the centerline
2. 0.02 foot when the straightedge is laid perpendicular to the centerline and extends from edge to edge of a traffic lane
3. 0.02 foot when the straightedge is laid within 24 feet of a pavement conform

Pavement located within 12.5 feet of the ends of bridges, approach slabs, culverts visible on the roadway surface, railroad crossings, at-grade intersections, and transverse surface joints with existing pavement must comply with Mean Roughness Index and 12-foot straightedge requirements. The requirements for areas of localized roughness do not apply to these areas.

For each 0.1-mile section, your International Roughness Index values must be within 10 percent of the Department's International Roughness Index values. The Engineer may order you to recalibrate your inertial profiler equipment and reprofile. If your results are inaccurate due to operator error, the Engineer may disqualify your inertial profiler operator.

36-3.02 MATERIALS

Not Used

36-3.03 CONSTRUCTION

Notify the Engineer of the start location by station and start time at least 2 business days before each day of profiling.

Before profiling, remove foreign objects from the pavement surface and mark the beginning and ending station on the pavement shoulder. The stationing must be the same when profiling more than one surface.

36-3.04 PAYMENT

Not Used

^^

37 BITUMINOUS SEALS

01-20-17

Replace section 37 with:

07-15-16

37 SEAL COATS

37-1 GENERAL

37-1.01 GENERAL

37-1.01A Summary

Section 37-1 includes general specifications for applying seal coats.

37-1.01B Definitions

Reserved

37-1.01C Submittals

At least 10 days before the preconstruction meeting submit a list of participants in the preconstruction meeting. Provide each participant's name, employer, title, and role in the production and placement of the seal coats.

At least 10 days before starting seal coat activities, submit the names of the authorized laboratories for quality control testing.

For each delivery of asphalt binder or asphaltic emulsion to the job site, submit a certificate of compliance and a copy of the specified test results.

For a seal coat that uses crumb rubber modifier, submit a Crumb Rubber Usage Report form monthly and at the end of project.

37-1.01D Quality Assurance

37-1.01D(1) General

For aggregate testing, quality control laboratories must be in compliance with the Department's Independent Assurance Program to be an authorized laboratory. Quality control personnel must be qualified under the Department's Independent Assurance Program.

01-20-17

For emulsion testing, quality control laboratories must participate in the AASHTO re:source proficiency sample program.

07-15-16

37-1.01D(2) Preconstruction Meeting

Hold a preconstruction meeting within 5 days before start of seal coat work at a mutually agreed time and place with the Engineer and your:

1. Project superintendent
2. Project foreman
3. Traffic control foreman

Make arrangements for the conference facility. Preconstruction meeting participants must sign an attendance sheet provided by the Engineer. Be prepared to discuss:

1. Quality control testing
2. Acceptance testing
3. Seal coat placement
4. Proposed application rates for asphaltic emulsion or asphalt binder and aggregate.
5. Training on placement methods
6. Checklist of items for proper placement
7. Unique issues specific to the project, including:
   - 7.1. Weather
   - 7.2. Alignment and geometrics
   - 7.3. Traffic control requirements

    7.4. Haul distances
    7.5. Presence and absence of shaded areas
    7.6. Any other local conditions
8. Contingency plan for material deliveries, equipment breakdowns, and traffic handling
9. Who in the field has authority to adjust application rates and how adjustments will be documented
10. Schedule of sweepings

37-1.02 MATERIALS

Not Used

37-1.03 CONSTRUCTION

37-1.03A General

If seal coat activities affect access to public parking, residential property, or commercial property, post signs at 100-foot intervals on the affected streets. Signs must display *No Parking – Tow Away*. Signs must state the dates and hours parking or access will be restricted. Notify residents, businesses, and local agencies at least 24 hours before starting activities. The notice must:

1. Describe the work to be performed
2. Detail streets and limits of activities
3. Indicate dates and work hours
4. Be authorized

Asphaltic emulsion or asphalt binder for seal coats may be reheated if necessary. After loading the asphaltic emulsion or asphalt binder into a truck for transport to the job site, do not heat asphaltic emulsion above 160 degrees F and asphalt rubber binder above 425 degrees F. During reheating, circulate or agitate the asphaltic emulsion or asphalt binder to prevent localized overheating.

Except for fog seals, apply quick setting Grade 1 asphaltic emulsions at a temperature from 75 to 130 degrees F and apply quick setting Grade 2 asphaltic emulsions at a temperature from 110 to 185 degrees F.

You determine the application rates for asphaltic emulsion or asphalt binder and aggregate and the Engineer authorizes the application rates.

37-1.03B Equipment

A self-propelled distributor truck for applying asphaltic emulsion or asphalt binder must be equipped with:

1. Pressure-type system with insulated tanks with circulating unit
2. Spray bars:
    2.1. With minimum length of 9 feet and full-circulating type
    2.2. With full-circulating-type extensions if needed to cover a greater width
    2.3. Adjustable to allow positioning at various heights above the surface to be treated
    2.4. Operated by levers such that 1 or all valves may be quickly opened or closed in one operation
3. Devices and charts to provide for accurate and rapid determination and control of asphaltic emulsion or asphalt binder quantities being applied. Include an auxiliary wheel type meter that registers:
    3.1. Speed in ft/min
    3.2. Trip by count
    3.3. Total distance in feet
4. Distribution system:
    4.1. Capable of producing a uniform application of asphaltic emulsion or asphalt binder in controlled quantities ranging from 0.02 to 1 gal/sq yd of surface and at a pressure ranging from 25 to 75 psi
    4.2. Pumps that spray asphaltic emulsion or asphalt binder within 0.02 gal/sq yd of the set rate
    4.3. With a hose and nozzle for application of asphaltic emulsion to areas inaccessible to the spray bar
    4.4. With pressure gauges and a thermometer for determining temperatures of the asphaltic emulsion or asphalt binder

You may use cab-controlled valves for the application of asphaltic emulsion or asphalt binder. The valves controlling the flow from nozzles must act positively to provide a uniform unbroken application of asphaltic emulsion or asphalt binder.

Maintain distributor and storage tanks at all times to prevent dripping.

37-1.04 PAYMENT

Not Used

37-2 CHIP SEALS

37-2.01 GENERAL

37-2.01A General

37-2.01A(1) Summary

Section 37-2.01 includes general specifications for applying chip seals.

37-2.01A(2) Definitions

Reserved

37-2.01A(3) Submittals

At least 15 days before starting placement of chip seal, submit:

1. Samples for:
   - 1.1. Asphaltic emulsion chip seal, two 1-quart wide mouth plastic containers with screw top lid of asphaltic emulsion
   - 1.2. Polymer modified asphaltic emulsion chip seal, two 1-quart wide mouth plastic containers with screw top lid of polymer modified asphaltic emulsion
   - 1.3. Asphalt rubber binder chip seal, two 1-quart cans of base asphalt binder
   - 1.4. Asphalt rubber binder chip seal, five 1-quart cans of asphalt rubber binder
2. Asphaltic emulsion, polymer modified asphaltic emulsion, asphalt binder or asphalt rubber binder data as follows:
   - 2.1. Supplier and Type/Grade of asphaltic emulsion or asphalt binder
   - 2.2. Type of modifier used including polymer or crumb rubber or both
   - 2.3. Percent of crumb rubber, if used as modifier
   - 2.4. Copy of the specified test results for asphaltic emulsion or asphalt binder
3. 50 lb of uncoated aggregate
4. Aggregate test results for the following:
   - 4.1. Gradation
   - 4.2. Los Angeles Rattler
   - 4.3. Percent of crushed particles
   - 4.4. Flat and elongated particles
   - 4.5. Film stripping
   - 4.6. Cleanness value
   - 4.7. Durability
5. Vialit test results

Submit quality control test results for the quality characteristics within the reporting times allowance after sampling shown in the following table:

Quality Control Test Result Reporting

Quality characteristic	Maximum reporting time allowance
Los Angeles Rattler loss (max, %)	48 hours
Percent of crushed particles (min, %)	48 hours
Flat and elongated particles (max by weight at 3:1, %)	48 hours
Film stripping (max, %)	48 hours
Durability (min)	48 hours
Gradation (percentage passing)	24 hours
Cleanness value (min)	24 hours
Asphaltic emulsion spread rate (gal/sq yd)	24 hours

Within 3 days after taking asphaltic emulsion or asphalt binder quality control samples, submit the authorized laboratory's test results.

37-2.01A(4) Quality Assurance

37-2.01A(4)(a) General

Reserved

37-2.01A(4)(b) Quality Control

37-2.01A(4)(b)(i) General

Reserved

37-2.01A(4)(b)(ii) Aggregate

All tests must be performed on uncoated aggregate except for film stripping which must be performed on precoated aggregate.

For aggregate, the authorized laboratory must perform sampling and testing at the specified frequency and location for the following quality characteristics:

Aggregate Quality Control Requirements

Quality characteristic	Test method	Minimum sampling and testing frequency	Location of sampling
Los Angeles Rattler loss (max, %) At 100 revolutions At 500 revolutions	California Test 211	1st day of production	See California Test 125
Percent of crushed particles Coarse aggregate (min, %) One-fractured face Two-fractured faces Fine aggregate (min, %) (Passing No. 4 sieve and retained on No. 8 sieve) One fractured face	AASHTO T 335	1st day of production	See California Test 125
Flat and elongated particles (max by weight at 3:1, %)	ASTM D4791	1st day of production	See California Test 125
Film stripping (max, %)	California Test 302	1st day of production	See California Test 125
Durability (min)	California Test 229	1st day of production	See California Test 125
Gradation (% passing)	California Test 202	2 per day	See California Test 125
Cleanness value (min)	California Test 227	2 per day	See California Test 125

37-2.01A(4)(b)(iii) Chip Seals

For a chip seal, the authorized laboratory must perform sampling and testing at the specified frequency and location for the following quality characteristics:

Chip Seal Quality Control Requirements

Quality characteristic	Test method	Minimum sampling and testing frequency	Location of sampling
Asphaltic emulsion binder spread rate (gal/sq yd)	California Test 339	1 per day per distributor truck	Pavement surface

37-2.01A(4)(c) Department Acceptance

Department Acceptance shall not apply to identified areas where the existing surfacing before application of chip seal, contains defective areas as determined by the Engineer and Contractor. At least 7 days

before starting placement of the chip seal, the Contractor shall submit a written list of existing defective areas, identifying the lane direction, lane number, starting and ending highway post mile locations, and defect type. The Engineer must agree on which of the identified areas are defective.

Defective areas are defined as one of the following:

1. Areas with wheel path rutting in excess of 3/8 inch when measured by placing a straightedge 12 feet long on the finished surface perpendicular to the center line and measuring the vertical distance between the finished surface and the lower edge of the straightedge
2. Areas exhibiting flushing

For a chip seal, acceptance is based on visual inspection for the following:

1. Uniform surface texture
2. Raveling, which consists of the separation of the aggregate from the asphaltic emulsion or asphalt binder
3. Flushing, which consists of the occurrence of a film of asphaltic material on the surface of the chip seal.
4. Streaking, which consists of alternating longitudinal bands of asphaltic emulsion or asphalt binder without uniform aggregate retention, approximately parallel with the lane line.

Areas of raveling, flushing or streaking that are greater than 0.5 sq ft shall be considered defective and must be repaired.

Raveling and streaking must be repaired by placing an additional layer of chip seal over the defective area.

For asphaltic emulsion or asphalt binder, acceptance is based on the Department's sampling and testing for compliance with the requirements for the quality characteristics specified.

For aggregate, acceptance is based on the Department's sampling and testing for compliance with the requirements shown in the following table:

Chip Seal Aggregate Acceptance Criteria

Quality characteristic	Test method	Requirements
Los Angeles Rattler loss (max, %) At 100 revolutions At 500 revolutions	California Test 211	 10 40
Percent of crushed particles: Coarse aggregate (min, %) One-fractured face Two-fractured faces Fine aggregate (min, %) (Passing No. 4 sieve and retained on No. 8 sieve) One fractured face	AASHTO T 335	 95 90 70
Flat and elongated particles (max by weight at 3:1, %)	ASTM D4791	10
Film stripping (max, %)	California Test 302	25
Durability (min)	California Test 229	52
Gradation (% passing by weight)	California Test 202	Aggregate Gradation table shown under Materials for the chip seal type specified.
Cleanness value (min)	California Test 227	80

If test results for the aggregate gradation do not comply with specifications, you may remove the chip seal represented by these tests or request that it remain in place with a payment deduction. The deduction is $1.75 per ton for the aggregate represented by the test results.

If test results for aggregate cleanness value do not comply with the specifications, you may remove the chip seal represented by these tests or you may request that the chip seal remain in place with a pay deduction corresponding to the cleanness value shown in the following table:

Chip Seal Cleanness Value Deductions

Cleanness value	Deduction
80 or over	None
79	$2.00 /ton
77–78	$4.00 /ton
75–76	$6.00 /ton

If the aggregate cleanness value is less than 75, remove the chip seal.

37-2.01B Materials

37-2.01B(1) General

Reserved

37-2.01B(2) Asphaltic Emulsions and Asphalt Binders

Reserved

37-2.01B(3) Aggregate

37-2.01B(3)(a) General

Aggregate must be broken stone, crushed gravel, or both.

Aggregate must comply with the requirements shown in the following table:

Chip Seal Aggregate Requirements

Quality characteristic	Test method	Requirements
Los Angeles Rattler loss (max, %) At 100 revolutions At 500 revolutions	California Test 211	 10 40
Percent of crushed particles Coarse aggregate (min, %) One-fractured face Two-fractured faces Fine aggregate (min, %) (Passing No. 4 sieve and retained on No. 8 sieve) One fractured face	AASHTO T 335	 95 90 70
Flat and elongated particles (max by weight at 3:1, %)	ASTM D4791	10
Film stripping (max, %)	California Test 302	25
Durability (min)	California Test 229	52
Gradation (% passing by weight)	California Test 202	Aggregate Gradation table shown under Materials for the chip seal type specified.
Cleanness value (min)	California Test 227	80

The authorized laboratory must conduct the Vialit test using the proposed asphaltic emulsion or asphalt binder and aggregate for compliance with the requirements shown in the following table:

Chip Retention Requirements

Quality characteristic	Test method	Requirement
Chip retention (%)	Vialit test method for aggregate in chip seals, French chip (Modified)[a]	95

[a]The asphaltic emulsion or asphalt binder must be within the field placement temperature range and application rate during specimen preparation. For asphalt binder cure the specimen for first 2 hours at 100 °F.

37-2.01B(3)(b) Precoated Aggregate

Precoating of aggregate must be performed at a central mixing plant. The plant must be authorized under the Department's *MPQP*.

When precoating aggregate, do not recombine fine materials collected in dust control systems.

Precoated aggregate must be preheated from 260 to 325 degrees F. Coat with any of the asphalts specified in the table titled "Performance Graded Asphalt Binder" in section 92. The asphalt must be from 0.5 to 1.0 percent by weight of dry aggregate. You determine the exact asphalt rate for precoating of aggregate.

Do not stockpile precoated aggregate.

37-2.01C Construction

37-2.01C(1) General

For chip seals on 2-lane, 2-way roadways, place a W8-7 (LOOSE GRAVEL) sign and a W13-1 (35) plaque at 2,000-foot maximum intervals along each side of the traveled way where aggregate is spread on a traffic lane and at public roads or streets entering the chip seal area. Place the 1st W8-7 sign in each direction where traffic first encounters the loose aggregate, regardless of which lane the aggregate is spread on. A W13-1 (35) plaque is not required where the posted speed limit is less than 40 mph.

For chip seals on freeways, expressways, and multilane conventional highways, place a W8-7, (LOOSE GRAVEL) sign and a W13-1 (35) plaque at 2,000-foot maximum intervals along the outside edge of the traveled way nearest to the lane worked on, at on ramps, and at public roads or streets entering the chip seal area. Place the 1st W8-7 sign where the aggregate starts with respect to the direction of travel on that lane. A W13-1 (35) plaque is not required where the posted speed limit is less than 40 mph.

Pilot cars must have cellular or radio contact with other pilot cars and personnel in the work zone. The maximum speed of the pilot cars convoying or controlling traffic through the traffic control zone must be 15 mph on 2-lane, two-way highways and 25 mph on multilane divided and undivided highways. Pilot cars must only use traffic lanes open to traffic.

On the days that closures are not allowed, you may use a moving closure to maintain the seal coat surface. The moving closure is only allowed during daylight hours when traffic will be the least inconvenienced and delayed. The Engineer determines the hours for the moving closure.

Maintain signs in place at each location until the final sweeping of the chip seal surface for that location is complete. Signs may be set on temporary portable supports with the W13-1 sign below the W8-7 sign or on barricades with the W13-1 sign alternating with the W8-7 sign.

Schedule chip seal activities so that the chip seals are placed on both lanes of the traveled way each work shift.

If traffic is routed over a surface where a chip seal application is intended, the chip seal must not be applied to more than half the width of the traveled way at a time, and the remaining width must be kept free of obstructions and open to traffic until the previously applied width is ready for traffic use.

Wherever maintenance sweeping of the chip seal surface is complete, place permanent traffic stripes and pavement markings within 10 days.

If you fail to place the permanent traffic stripes and pavement markings within the specified time, the Department withholds 50 percent of the estimated value of the chip seal work completed that has not received permanent traffic stripes and pavement markings.

37-2.01C(2) Equipment

Equipment for chip seals must include and comply with the following:

1. Aggregate haul trucks must have:
   1.1. Tailgate that discharge aggregate
   1.2. Device to lock onto the rear aggregate spreader hitch
   1.3. Dump bed that will not push down on the spreader when fully raised
   1.4. Dump bed that will not spill aggregate on the roadway when transferred to the spreader hopper
   1.5. Tarpaulin to cover precoated aggregate when haul distance exceeds 30 minutes or ambient temperature is less than 65 degrees F
2. Self-propelled aggregate spreaders must have:
   2.1. Aggregate hopper in the rear
   2.2. Belt conveyor that carries the aggregate to the front
   2.3. Spreading hopper capable of providing a uniform aggregate spread rate over the entire width of the traffic lane in 1 application.
3. Self-propelled power brooms must:
   3.1. Not be steel-tined brooms on emulsion chip seals
   3.2. Be capable of removing loose aggregate adjacent to barriers that prevent aggregate from being swept off the roadway, including curbs, gutters, dikes, berms, and railings
4. Pneumatic or foam filled rubber tired rollers must:
   4.1. Be an oscillating type at least 4 feet wide
   4.2. Be self-propelled and reversible
   4.3. Have tires of equal size, diameter, type, and ply
   4.4. Carry at least 3,000 lbs of load on each wheel
   4.5 Have tires with an air pressure of 100 ± 5 psi or be foam filled

37-2.01C(3) Surface Preparation

Before applying chip seals, cover manholes, valve and monument covers, grates, or other exposed facilities located within the area of application, using a plastic or oil resistant construction paper secured by tape or adhesive to the facility being covered. Reference the covered facilities with enough control points to relocate the facilities after the application of the chip seal.

Immediately before applying chip seals, clean the surface to receive a chip seal by removing any extraneous material affecting adhesion of the chip seal with the existing surface and drying. Use self-propelled power brooms to clean the existing pavement.

37-2.01C(4) Placement

37-2.01C(4)(a) General

Schedule the operations so that chip seals are placed on both lanes of the traveled way each work shift. At the end of the work shift, the end of the chip seals on both lanes must generally match.

37-2.01C(4)(b) Applying Asphaltic Emulsions or Asphalt Binders

Prevent spraying on existing pavement not intended for chip seals or on previously applied chip seals using a material such as building paper. Remove the material after use.

Align longitudinal joints between chip seal applications with designated traffic lanes.

For asphaltic emulsion or asphalt binder, overlap longitudinal joints by not more than 4 inches. You may overlap longitudinal joints up to 8 inches if authorized.

For areas not accessible to a truck distributor bar apply:

1. Asphaltic emulsions by hand spraying
2. Asphalt binders with a squeegee or other authorized means

You may overlap the asphaltic emulsion or asphalt binder applications before the application of aggregate at longitudinal joints.

Do not apply the asphaltic emulsion or asphalt binder unless there is sufficient aggregate at the job site to cover the asphaltic emulsion or asphalt binder.

Discontinue application of asphaltic emulsion or asphalt binder early enough to comply with lane closure requirements. Apply to 1 lane at a time and cover the lane width entirely in 1 operation.

37-2.01C(4)(c) Spreading Aggregates

37-2.01C(4)(c)(i) General

Prevent vehicles from driving on asphaltic emulsion or asphalt binder before spreading aggregate.

Spread aggregate within 10 percent of your determined rate.

Spread aggregate at a uniform rate over the full lane width in 1 application. Apply to 1 lane at a time.

Sweep excess aggregate at joints before spreading adjacent aggregate.

Operate the spreader at speeds slow enough to prevent aggregate from rolling over after dropping.

If the spreader is not moving, aggregate must not drop. If you stop spreading and aggregate drops, remove the excess aggregate before resuming activities.

37-2.01C(4)(c)(ii) Precoated Aggregate Application

During transit, cover precoated aggregate with tarpaulins if the ambient air temperature is below 65 degrees F or the haul time exceeds 30 minutes.

When applied, precoated aggregate must be from 225 to 325 degrees F.

37-2.01C(4)(d) Finishing

37-2.01C(4)(d)(i) General

Remove piles, ridges, or unevenly distributed aggregate. Repair permanent ridges, bumps, streaks or depressions in the finished surface. Spread additional aggregate and roll if aggregate is picked up by rollers or vehicles.

Chip seal joints between adjacent applications of a chip seal must be smooth, straight, uniform, and completely covered.

A coverage is 1 roller movement over the entire width of lane. A pass is 1 roller movement parallel to the chip seal application in either direction. Overlapping passes are part of the coverage being made and are not part of a subsequent coverage. Do not start a new coverage until completing the previous coverage.

Before opening to traffic, finish the chip seals in the following sequence:

1. Perform initial rolling consisting of 1 coverage with a pneumatic-tired roller
2. Perform final rolling consisting of 2 coverages with a pneumatic-tired roller
3. Sweep excess aggregate from the roadway and adjacent abutting areas
4. Apply a flush coat if specified
5. Remove covers from the facilities

37-2.01C(4)(d)(ii) Traffic Control With Pilot Car

For 2-lane 2-way roadways under 1-way traffic control, upon completion of final rolling, traffic must be controlled with pilot cars and routed over the new chip seal for a period of 2 to 4 hours before opening the lane to traffic not controlled with pilot cars.

For multilane roadways, when traffic is controlled with pilot cars, a maximum of 1 lane in the direction of travel must be open to traffic. Traffic must be controlled with pilot cars and be routed on the new chip seal surface of the lane for a minimum of 2 hours after completion of the initial sweeping and before opening the lane to traffic not controlled with pilot cars. Once traffic controlled with pilot cars is routed over the chip seal at a particular location, continuous control must be maintained at that location until the chip seal placement and sweeping on adjacent lanes to receive a chip seal is completed.

37-2.01C(4)(d)(iii) Sweeping

Sweeping must be performed after the chip seal has set and there is no damage or dislodging of aggregate from the chip seal surface. As a minimum, sweeping is required at the following times:

1. On 2-lane 2-way roadways, from 2 to 4 hours after traffic, controlled with pilot cars, has been routed on the chip seal
2. On multilane roadways, from 2 to 4 hours after aggregate have been placed
3. In addition to previous sweeping, perform final sweeping immediately before opening any lane to public traffic, not controlled with pilot cars

37-2.01C(4)(d)(iv) Excess Aggregate

Dispose of excess aggregate. If ordered, salvaging and stockpiling of excess aggregate is change order work.

37-2.01C(4)(e) Chip Seal Maintenance

Perform sweeping on the morning following the application of aggregate on any lane that has been open to traffic not controlled with pilot cars and before starting any other activities.

Chip seal surfaces must be maintained for 4 consecutive days from the day aggregate is applied. Maintenance must include sweeping to maintain a surface free of loose aggregate and to prevent formation of corrugations. Sweeping must not dislodge aggregate set in asphaltic emulsion or asphalt binder.

After 4 consecutive days, excess aggregate must be removed from the paved areas.

37-2.01D Payment

If there is no bid item for traffic control system, furnishing and using a pilot car is included in the various items of the work involved in applying the chip seal.

The payment quantity for precoated aggregate is the weight measured after the aggregate is preheated and precoated with asphalt binder.

If recorded batch weights are printed automatically, the payment quantity for aggregate is the weight determined from the printed batch weights if:

1. Total weight for the precoated aggregate per batch is printed
2. Total asphalt binder weight per batch is printed
3. Zero tolerance weight is printed before weighing the first batch and after weighing the last batch for each truckload
4. Time, date, mix number, load number, and truck identification are correlated with a load slip
5. Copy of the recorded batch weights is certified by a licensed weighmaster

37-2.02 ASPHALTIC EMULSION CHIP SEALS

37-2.02A General

37-2.02A(1) Summary

Section 37-2.02 includes specifications for applying asphaltic emulsion chip seals. An asphaltic emulsion chip seal includes applying an asphaltic emulsion, followed by aggregate, and then a flush coat.

A double asphaltic emulsion chip seal is the application of an asphaltic emulsion followed by aggregate, applied twice in sequence and then a flush coat.

37-2.02A(2) Definitions

Reserved

37-2.02A(3) Submittals

Immediately after sampling, submit two 1-quart plastic containers of asphaltic emulsion taken in the presence of the Engineer. Samples must be submitted in insulated shipping container.

37-2.02A(4) Quality Assurance

37-2.02A(4)(a) General

Reserved

37-2.02A(4)(b) Quality Control

37-2.02A(4)(b)(i) General

Reserved

37-2.02A(4)(b)(ii) Asphaltic Emulsions

Circulate asphaltic emulsion in the distributor truck before sampling. Take samples from the distributor truck at mid load or from a sampling tap or thief. Before taking samples, draw and dispose of 1 gallon. In the presence of the Engineer, take two 1-quart samples in a plastic container with lined sealed lid for acceptance testing.

For asphaltic emulsion, the authorized laboratory must perform quality control sampling and testing at the specified frequency and location for the following quality characteristics:

Asphaltic Emulsion

Quality characteristic	Test method	Minimum sampling and testing frequency	Sampling location
Saybolt Furol Viscosity, at 25 °C (Saybolt Furol seconds)	AASHTO T 59	Minimum 1 per day per delivery truck	Distributor truck
Sieve Test (%)			
Storage stability, 1 day (%)			
Residue by distillation (%)			
Particle charge[a]			
Tests on Residue from Distillation Test:			
Penetration, 25 °C	AASHTO T 49	Minimum 1 per day per delivery truck	Distributor truck
Ductility	AASHTO T 51		
Solubility in trichloroethylene	AASHTO T 44		

[a]If the result of the particle charge is inconclusive, the asphaltic emulsion must be tested for pH under ASTM E70. Grade QS1h asphaltic emulsion must have a minimum pH of 7.3. Grade CQS1h asphaltic emulsion must have a maximum pH of 6.7.

37-2.02A(4)(c) Department Acceptance

Aggregate acceptance is based on the Department's sampling and testing for compliance with the requirements shown in the following table:

Aggregate Gradation Acceptance Criteria

Quality characteristic	Test method	Requirement		
Gradation (% passing by weight) Sieve size:	California Test 202	3/8"	5/16"	1/4"
3/4"		--	--	--
1/2"		100	--	--
3/8"		85–100	100	100
No. 4		0–15	0–50	60–85
No. 8		0–5	0–15	0–25
No. 16		--	0–5	0–5
No. 30		--	0–3	0–3
No. 200		0–2	0–2	0–2

37-2.02B Materials

37-2.02B(1) General

Reserved

37-2.02B(2) Asphaltic Emulsions

Reserved

37-2.02B(3) Aggregate

Aggregate gradation for an asphaltic emulsion chip seal must comply with the requirements shown in the following table:

Asphaltic Emulsion Chip Seal Aggregate Gradation

Quality characteristic	Test method	Requirement		
Gradation (% passing by weight) Sieve size:	California Test 202	3/8"	5/16"	1/4"
3/4"		--	--	--
1/2"		100	--	--
3/8"		85–100	100	100
No. 4		0–15	0–50	60–85
No. 8		0–5	0–15	0–25
No. 16		--	0–5	0–5
No. 30		--	0–3	0–3
No. 200		0–2	0–2	0–2

37-2.02C Construction

37-2.02C(1) General

Reserved

37-2.02C(2) Asphaltic Emulsions

Asphaltic emulsions must be applied within the application rate ranges shown in the following table:

Asphaltic Emulsion Application Rates

Aggregate gradation	Application rate range (gal/sq yd)
3/8"	0.30–0.45
5/16"	0.25–0.35
1/4"	0.20–0.30

For double asphaltic emulsion chip seals, the asphaltic emulsions must be applied within the application rates shown in the following table:

Asphaltic Emulsion Application Rates

Double chip seals	Application rate range (gal/sq yd)
1st application	0.30–0.45
2nd application	0.20–0.30

When applied, the temperature of the asphaltic emulsions must be from 130 to 180 degrees F.

Apply asphaltic emulsions when the ambient air temperature is from 65 to 110 degrees F and the pavement surface temperature is at least 80 degrees F.

Do not apply asphaltic emulsions when weather forecasts predict the ambient air temperature will fall below 39 degrees F within 24 hours after application.

37-2.02C(3) Spreading Aggregates

Aggregate must be spread within the spread rate ranges shown in the following table:

Aggregate Spread Rates

Aggregate gradation	Spread rate range (lb/sq yd)
3/8"	20–30
5/16"	16–25
1/4"	12–20

For double asphaltic emulsion chip seals, aggregate must be spread within the spread rate ranges shown in the following table:

Aggregate Spread Rates

Double chip seal	Spread rate range (lb/sq yd)
1st application	23–30
2nd application	12–20

Remove excess aggregate on the 1st application before the 2nd application of asphaltic emulsion.

You may stockpile aggregate for asphaltic emulsion chip seals if you prevent contamination. Aggregate must have a damp surface at spreading. If water visibly separates from the aggregate, do not spread. You may re-dampen aggregate in the delivery vehicle.

Spread aggregate before an asphaltic emulsion sets or breaks.

Do not spread aggregate more than 2,500 feet ahead of the completed initial rolling.

37-2.02D Payment

Not Used

37-2.03 POLYMER MODIFIED ASPHALTIC EMULSION CHIP SEALS

37-2.03A General

37-2.03A(1) Summary

Section 37-2.03 includes specifications for applying polymer modified asphaltic emulsion chip seals. A polymer modified asphaltic emulsion chip seal includes applying a polymer modified asphaltic emulsion, followed by aggregate, and then a flush coat.

A double polymer modified asphaltic emulsion chip seal is the application of a polymer modified asphaltic emulsion followed by aggregate, applied twice in sequence and then a flush coat.

37-2.03A(2) Definitions

Reserved

37-2.03A(3) Submittals

Immediately after sampling, submit two 1-quart cans of polymer modified asphaltic emulsion taken in the presence of the Engineer. A sample must be submitted in an insulated shipping container.

37-2.03A(4) Quality Assurance

37-2.03A(4)(a) General

Reserved

37-2.03A(4)(b) Quality Control

37-2.03A(4)(b)(i) General

Reserved

37-2.03A(4)(b)(ii) Polymer Modified Asphaltic Emulsions

Circulate polymer modified asphaltic emulsions in the distributor truck before sampling. Take samples from the distributor truck at mid load or from a sampling tap or thief. Before taking samples, draw and dispose of 1 gallon. In the presence of the Engineer, take two 1-quart samples for acceptance testing.

For polymer modified asphaltic emulsions, the authorized laboratory must perform quality control sampling and testing at the specified frequency and location for the following quality characteristics:

Polymer Modified Asphaltic Emulsion

Quality characteristic	Test method	Minimum sampling and testing frequency	Sampling location
Saybolt Furol Viscosity, at 50 °C (Saybolt Furol seconds)	AASHTO T 59	Minimum 1 per day per delivery truck	Distributor truck
Settlement, 5 days (max, %)			
Storage stability test, 1 day (max, %)			
Sieve test (max, %)			
Demulsibility (min, %)			
Particle charge			
Ash content (max, %)	ASTM D3723		
Residue by evaporation (min, %)	California Test 331		
Tests on residue from evaporation test:			
Penetration, 25 °C	AASHTO T 49	Minimum 1 per day per delivery truck	Distributor truck
Penetration, 4 °C, 200g for 60 seconds	AASHTO T 49		
Ductility, 25 °C (min, mm)	AASHTO T 51		
Torsional recovery (min, %)	California Test 332		
Ring and Ball Softening Point (min, °F)	AASHTO T 53		

37-2.03A(4)(c) Department Acceptance

Aggregate acceptance is based on the Department's sampling and testing for compliance with the requirements shown in the following table:

Aggregate Gradation Acceptance Criteria

Quality characteristic	Test method	Requirement		
Gradation (% passing by weight) Sieve size:	California Test 202	3/8"	5/16"	1/4"
3/4"		--	--	--
1/2"		100	--	--
3/8"		85–100	100	100
No. 4		0–15	0–50	60–85
No. 8		0–5	0–15	0–25
No. 16		--	0–5	0–5
No. 30		--	0–3	0–3
No. 200		0–2	0–2	0–2

37-2.03B Materials

37-2.03B(1) General

Reserved

37-2.03B(2) Polymer Modified Asphaltic Emulsions

A polymer modified asphaltic emulsion must include elastomeric polymer.

A polymer modified asphaltic emulsion must be Grade PMRS2, PMRS2h, PMCRS2, or PMCRS2h. Polymer content in percent by weight does not apply.

A polymer modified asphaltic emulsion must comply with section 94 and the quality characteristic requirements in the following table:

Polymeric Asphaltic Emulsion

Quality characteristic	Test method	Requirement
Penetration, 4 °C, 200g for 60 seconds (min)	AASHTO T 49	6
Ring and Ball Softening Point (min, °F)	AASHTO T 53	135

37-2.03B(3) Aggregate

The aggregate gradation for a polymer modified asphaltic emulsion chip seal must comply with the requirements shown in the following table:

Asphaltic Emulsion Chip Seal Aggregate Gradation

Quality characteristic	Test method	Requirement		
Gradation (% passing by weight) Sieve Size	California Test 202	3/8"	5/16"	1/4"
3/4"		--	--	--
1/2"		100	--	--
3/8"		85–100	100	100
No. 4		0–15	0–50	60–85
No. 8		0–5	0–15	0–25
No. 16		--	0–5	0–5
No. 30		--	0–3	0–3
No. 200		0–2	0–2	0–2

37-2.03C Construction

Polymer modified asphaltic emulsions must be applied within the application rate ranges shown in the following table:

Polymer Modified Asphaltic Emulsion Application Rates

Aggregate gradation	Application rate range (gal/sq yd)
3/8"	0.30–0.45
5/16"	0.25–0.35
1/4"	0.20–0.30

For double polymer modified asphaltic emulsion chip seals, polymer modified asphaltic emulsions must be applied within the application rates shown in the following table:

Polymer Modified Asphaltic Emulsion Application Rates

Double application	Application rate range (gal/sq yd)
1st application 2nd application	0.30–0.45 0.20–0.30

Apply polymer modified asphaltic emulsions when the ambient air temperature is from 60 to 105 degrees F and the pavement surface temperature is at least 80 degrees F.

Do not apply polymer modified asphaltic emulsions when weather forecasts predict the ambient air temperature will fall below 39 degrees F within 24 hours after application.

Aggregate must be spread within the spread rate ranges shown in the following table:

Aggregate Spread Rates

Chip seal type	Spread rate range (lb/sq yd)
3/8"	20–30
5/16"	16–25
1/4"	12–20

For double chip seals, aggregate must be spread within spread rate ranges shown in the following table:

Aggregate Spread Rates

Double application	Spread rate range (lb/sq yd)
1st application	23–30
2nd application	12–20

Remove excess aggregate on the 1st application before the 2nd application of asphaltic emulsion.

You may stockpile aggregate for the polymer modified asphaltic emulsion chip seals if you prevent contamination. Aggregate must have damp surfaces at spreading. If water visibly separates from the aggregate, do not spread. You may redampen aggregate in the delivery vehicle.

Spread aggregate before the polymer modified asphaltic emulsion sets or breaks.

Do not spread aggregate more than 2,500 feet ahead of the completed initial rolling.

37-2.03D Payment

Not Used

37-2.04 ASPHALT RUBBER BINDER CHIP SEALS

37-2.04A General

37-2.04A(1) Summary

Section 37-2.04 includes specifications for applying asphalt rubber binder chip seals.

An asphalt rubber binder chip seal consists of applying asphalt rubber binder followed by heated aggregate precoated with asphalt binder followed by a flush coat.

37-2.04A(2) Definitions

crumb rubber modifier: Combination of ground or granulated high natural scrap tire crumb rubber and scrap tire crumb rubber derived from waste tires described in Pub Res Code § 42703.

descending viscosity reading: Subsequent viscosity reading at least 5 percent lower than the previous viscosity reading.

high natural scrap tire crumb rubber: Material containing 40 to 48 percent natural rubber.

scrap tire crumb rubber: Any combination of vehicle tires or tire buffing.

37-2.04A(3) Submittals

At least 5 business days before use, submit the permit issued by the local air district for asphalt rubber binder field blending equipment and application equipment. If an air quality permit is not required by the local air district for producing asphalt rubber binder, submit verification from the local air district that an air quality permit is not required.

For each delivery of asphalt rubber binder ingredients to the job site, submit a certificate of compliance with a copy of the specified test results.

Submit a certified volume or weight slip for each delivery of asphalt rubber binder ingredients and asphalt rubber binder.

Submit a SDS for each asphalt rubber binder ingredient and the asphalt rubber binder.

At least 15 days before use, submit:

1. Samples of each asphalt rubber binder ingredient:
   1.1. 2 lbs of scrap tire crumb rubber
   1.2. 2 lbs of high natural scrap tire crumb rubber
   1.3. Two 1-quart cans of base asphalt binder
   1.4. Two 1-quart cans of asphalt modifier
2. Asphalt rubber binder formulation and data as follows:
   2.1. For asphalt modifier, include:
      2.1.1. Source of asphalt modifier
      2.1.2. Type of asphalt modifier
      2.1.3. Percentage of asphalt modifier by weight of asphalt binder
      2.1.4. Percentage of combined asphalt binder and asphalt modifier by weight of asphalt rubber binder
      2.1.5. Test results for the specified quality characteristics
   2.2. For crumb rubber modifier, include:
      2.2.1. Each source and type of scrap tire crumb rubber and high natural scrap tire crumb rubber
      2.2.2. Percentage of scrap tire crumb rubber and high natural scrap tire crumb rubber by total weight of asphalt rubber binder
      2.2.3. Test results for the specified quality characteristics
   2.3. For asphalt rubber binder, include minimum reaction time and temperature

Immediately after sampling, submit five 1-quart cans of asphalt rubber binder taken in the presence of the Engineer. Sample must be submitted in insulated shipping containers.

Submit notification 15 minutes before each viscosity test or submit a schedule of testing times.

Submit the log of asphalt rubber binder descending viscosity test results within 1 business day after sampling.

Submit asphalt rubber binder quality control viscosity test results within 1 business day after sampling.

37-2.04A(4) Quality Assurance

37-2.04A(4)(a) General

The equipment used in producing asphalt rubber binder and the equipment used in spreading asphalt rubber binder must be permitted for use or exempted by the local air district.

37-2.04A(4)(b) Quality Control

37-2.04A(4)(b)(i) General

Reserved

37-2.04A(4)(b)(ii) Asphalt Modifiers

For asphalt modifiers, the authorized laboratory must perform quality control sampling and testing at the specified frequency for the following quality characteristics:

Asphalt Modifier for Asphalt Rubber Binder

Quality characteristic	Test method	Frequency
Viscosity	ASTM D445	1 per shipment
Flash point	ASTM D92	
Molecular Analysis:		
Asphaltenes	ASTM D2007	1 per shipment
Aromatics	ASTM D2007	

37-2.04A(4)(b)(iii) Crumb Rubber Modifiers

Sample and test scrap tire crumb rubber and high natural scrap tire crumb rubber separately.

Perform quality control sampling and testing at the specified frequency for the following quality characteristics:

Crumb Rubber Modifier

Quality characteristic	Test method	Frequency
Scrap tire crumb rubber gradation	California Test 385	1 per 10,000
High natural scrap tire crumb rubber gradation	California Test 385	1 per 3,400 lb
Wire in CRM	California Test 385	1 per 10,000 lb
Fabric in CRM	California Test 385	
CRM particle length	--	
CRM specific gravity	California Test 208	
Natural rubber content in high natural scrap tire crumb rubber	ASTM D297	1 per 3,400 lb

37-2.04A(4)(b)(iv) Asphalt Rubber Binders

For asphalt rubber binders, the authorized laboratory must perform quality control sampling and testing at the specified frequency and location for the following quality characteristics:

Asphalt Rubber Binder Quality Control Requirements

Quality characteristic	Test method	Sampling location	Frequency
Descending viscosity[a] at 375 °F (Pa•s x 10^{-3})	ASTM D7741	Reaction vessel	1 per lot[b]
Viscosity at 375 °F (Pa•s x 10^{-3})	ASTM D7741	Distribution truck	15 minutes before use per lot[b]
Cone penetration at 25 °C (0.10 mm)	ASTM D217	Distribution truck	1 per lot[b]
Resilience at 25 °C (% rebound)	ASTM D5329		
Softening point (°C)	ASTM D36		

[a]Start taking viscosity readings at least 45 minutes after adding crumb rubber modifier and continue taking viscosity readings every 30 minutes until 2 consecutive descending viscosity readings have been obtained and the final viscosity complies with the specification requirement.
[b]A lot is defined in the *MPQP*.

Retain samples from each lot. Test samples for cone penetration, resilience, and softening point for the first 3 lots and if all 3 lots pass, the testing frequency may be reduced to once for every 3 lots.

If QC test results indicate that the asphalt rubber binder does not comply with the specifications, take corrective action and notify the Engineer.

37-2.04A(4)(c) Department Acceptance

37-2.04A(4)(c)(i) General

Reserved

37-2.04A(4)(c)(ii) Asphalt Modifiers

The Department accepts asphalt modifier based on compliance with the requirements shown in the following table:

Asphalt Modifier for Asphalt Rubber Binder

Quality characteristic	Test method	Requirement
Viscosity at 100 °C (m^2/s x 10^{-6})	ASTM D445	X ± 3[a]
Flash point (min, °C)	ASTM D92	207
Molecular Analysis:		
Asphaltenes (max, % by mass)	ASTM D2007	0.1
Aromatics (min, % by mass)	ASTM D2007	55

[a]The symbol "X" is the asphalt modifier viscosity.

37-2.04A(4)(c)(iii) Crumb Rubber Modifiers

Scrap tire CRM and high natural CRM are sampled and tested separately.

The Department accepts scrap tire CRM and high natural CRM based on compliance with the requirements shown in the following table:

Crumb Rubber Modifier for Asphalt Rubber Binder

Quality characteristic	Test method	Requirement
Wire in CRM (max, %)	California Test 385	0.01
Fabric in CRM (max, %)	California Test 385	0.05
CRM particle length (max, in)	--	3/16
CRM specific gravity	California Test 208	1.1–1.2
Natural rubber content in high natural CRM (%)	ASTM D297	40.0–48.0

The Department accepts CRM gradation based on the requirements shown in the following table:

Crumb Rubber Modifier Gradation Requirements

Quality characteristic	Test method	Requirement			
Gradation (% passing by weight) Sieve size:	California Test 385	Scrap tire crumb rubber		High natural scrap tire crumb rubber	
		Operating range	Contract compliance	Operating range	Contract compliance
No. 8		100	100	--	--
No. 10		95–100	90–100	100	100
No. 16		35–85	32–88	92–100	85–100
No. 30		2–25	1–30	25–95	20–98
No. 50		0–10	0–15	6–35	2–40
No. 100		0–5	0–10	0–7	0–10
No. 200		0–2	0–5	0–3	0–5

If a test result for CRM gradation does not comply with the specifications, the Department deducts the corresponding amount for each gradation test as shown in the following table:

Material	Gradation test result[a]	Deduction
Scrap tire crumb rubber	Operating range < TR < Contract compliance	$250
Scrap tire crumb rubber	TR > Contract compliance	$1,100
High natural scrap tire crumb rubber	Operating range < TR < Contract compliance	$250
High natural scrap tire crumb rubber	TR > Contract compliance	$600

[a]Test Result = TR

Each gradation test for scrap tire crumb rubber represents 10,000 lb or the quantity used in that day's production, whichever is less.

Each gradation test for high natural scrap tire crumb rubber represents 3,400 lb or the quantity used in that day's production, whichever is less.

37-2.04A(4)(c)(iv) Asphalt Rubber Binders

For Department acceptance testing, take a sample of asphalt rubber binder in the Engineer's presence every 5 lots or once a day, whichever is greater. Each sample must be in five 1-quart cans with an open top and friction lid.

For an asphalt rubber binder, acceptance is based on the Department’s sampling and testing for compliance with the requirements shown in the following table:

Asphalt Rubber Binder

Quality characteristic	Test method	Requirement
Cone penetration at 25 °C (0.10 mm)	ASTM D217	25–60
Resilience at 25 °C (% rebound)	ASTM D5329	18–50
Softening point (°C)	ASTM D36	55–88
Viscosity at 375 °F (Pa•s x 10^{-3})[a]	ASTM D7741	1,500–2,500

[a]Prepare sample for viscosity test under California Test 388.

37-2.04A(4)(c)(v) Precoated Aggregate

The Department accepts precoated aggregate based on compliance with the requirements shown in the following table:

Precoated Aggregate Gradation Acceptance Criteria

Quality Characteristic	Test method	Requirement
1/2" gradation (% passing by weight)	California Test 202	
Sieve size:		
3/4"		100
1/2"		85–90
3/8"		0–30
No. 4		0–5
No. 8		--
No. 200		0–1
3/8" gradation (% passing by weight)	California Test 202	
Sieve size:		
3/4"		100
1/2"		95–100
3/8"		70–85
No. 4		0–15
No. 8		0–5
No. 200		0–1

37-2.04B Materials

37-2.04B(1) General

Reserved

37-2.04B(2) Asphalt Binders

Asphalt binder used as the base binder for asphalt rubber binder must comply with the specifications for asphalt binder. Do not modify asphalt binder with polymer.

37-2.04B(3) Asphalt Modifiers

An asphalt modifier must be a resinous, high flash point, and aromatic hydrocarbon. An asphalt modifier must comply with the requirements shown in the following table:

Asphalt Modifier for Asphalt Rubber Binder

Quality characteristic	Test method	Requirement
Viscosity at 100 °C (m^2/s x 10^{-6})	ASTM D445	X ± 3[a]
Flash point (min, CL.O.C., °C)	ASTM D92	207
Molecular analysis:		
Asphaltenes by mass (max, %)	ASTM D2007	0.1
Aromatics by mass (min, %)	ASTM D2007	55

[a]*X* denotes the proposed asphalt modifier viscosity from 19 to 36. A change in *X* requires a new asphalt rubber binder submittal.

37-2.04B(4) Crumb Rubber Modifiers

The CRM to be used must be on the Authorized Materials List for crumb rubber modifier.

The CRM must be ground or granulated at ambient temperature.

Scrap tire crumb rubber and high natural scrap tire crumb rubber must be delivered to the asphalt rubber binder production site in separate bags.

Steel and fiber must be separated. If steel and fiber are cryogenically separated, it must occur before grinding and granulating. Cryogenically-produced CRM particles must be large enough to be ground or granulated.

The CRM must be dry, free-flowing particles that do not stick together. A maximum of 3 percent calcium carbonate or talc by weight of CRM may be added. The CRM must not cause foaming when combined with the asphalt binder and asphalt modifier.

The CRM must comply with the requirements shown in the following table:

Crumb Rubber Modifier for Asphalt Rubber Binder

Quality characteristic	Test method	Requirement
Wire in CRM (max, %)	California Test 385	0.01
Fabric in CRM (max, %)	California Test 385	0.05
CRM particle length (max, in)	--	3/16
CRM specific gravity	California Test 208	1.1–1.2

The CRM must comply with the requirements shown in the following table:

Crumb Rubber Modifier Requirements

Quality characteristic	Test method	Requirement	
		Scrap tire crumb rubber	High natural scrap tire crumb rubber
Acetone extract (%)	ASTM D297	6.0–16.0	4.0–16.0
Rubber hydrocarbon (min, %)		42.0–65.0	50.0
Natural rubber content (%)		22.0–39.0	40.0–48.0
Carbon black content (%)		28.0–38.0	--
Ash content (max, %)		8.0	--

Scrap tire crumb rubber gradation must comply with the gradation requirements shown in the following table:

Scrap Tire Crumb Rubber Gradation

Quality characteristic	Test method	Requirement		
Gradation (% passing by weight) Sieve size:	California Test 385	Gradation limit	Operating range	Contract compliance
No. 8		100	100	100
No. 10		98–100	95–100	90–100
No. 16		45–75	35–85	32–88
No. 30		2–20	2–25	1–30
No. 50		0–6	0–10	0–15
No. 100		0–2	0–5	0–10
No. 200		0	0–2	0–5

High natural scrap tire crumb rubber gradation must comply with the gradation requirements shown in the following table:

High Natural Scrap Tire Crumb Rubber Gradation

Quality characteristic	Test method	Requirement		
Gradation (% passing by weight) Sieve size:	California Test 385	Gradation limit	Operating range	Contract compliance
No. 10		100	100	100
No. 16		95–100	92–100	85–100
No. 30		35–85	25–95	20–98
No. 50		10–30	6–35	2–40
No. 100		0–4	0–7	0–10
No. 200		0–1	0–3	0–5

37-2.04B(5) Asphalt Rubber Binders

An asphalt rubber binder must be a combination of:

1. Asphalt binder
2. Asphalt modifier
3. Crumb rubber modifier

Asphalt rubber binder blending equipment must be authorized under the Department's *MPQP*.

The blending equipment must allow the determination of weight percentages of each asphalt rubber binder ingredient.

An asphalt rubber binder must be 79 ± 1 percent by weight asphalt binder and 21 ± 1 percent by weight of CRM. The minimum percentage of CRM must be 20.0 percent and lower values must not be rounded up.

The CRM must be 75 ± 2 percent by weight scrap tire crumb rubber and 25 ± 2 percent by weight high natural scrap tire crumb rubber.

An asphalt modifier and asphalt binder must be blended at the production site. An asphalt modifier must be from 2.5 to 6.0 percent by weight of the asphalt binder in the asphalt rubber binder. The asphalt rubber binder supplier determines the exact percentage.

If blended before adding CRM, the asphalt binder must be from 375 to 440 degrees F when an asphalt modifier is added and the mixture must circulate for at least 20 minutes. An asphalt binder, asphalt modifier, and CRM may be proportioned and combined simultaneously.

The blend of an asphalt binder and an asphalt modifier must be combined with the CRM at the asphalt rubber binder production site. The asphalt binder and asphalt modifier blend must be from 375 to 440 degrees F when the CRM is added. Combined ingredients must be allowed to react at least 45 minutes at temperatures from 375 to 425 degrees F except the temperature must be at least 10 degrees F below the flash point of the asphalt rubber binder.

After reacting, the asphalt rubber binder must comply with the requirements shown in the following table:

Asphalt Rubber Binder

Quality characteristic	Test method	Requirement
Cone penetration at 25 °C (0.10 mm)	ASTM D217	25–60
Resilience at 25 °C (% rebound)	ASTM D5329	18–50
Softening point (°C)	ASTM D36	55–88
Viscosity at 375 °F (Pa•s x 10^{-3})[a]	ASTM D7741	1,500–2,500

[a]Prepare sample for viscosity test under California Test 388.

Maintain asphalt rubber binder at a temperature from 375 to 415 degrees F.

Stop heating unused asphalt rubber binder 4 hours after the 45-minute reaction period. Reheating asphalt rubber binder that cools below 375 degrees F is a reheat cycle. Do not exceed 2 reheat cycles. If reheating, the asphalt rubber binder must be from 375 to 415 degrees F before use.

During reheating, you may add CRM. The CRM must not exceed 10 percent by weight of the asphalt rubber binder. Allow added CRM to react for at least 45 minutes. Reheated asphalt rubber binder must comply with the specifications for asphalt rubber binder.

37-2.04B(6) Precoated Aggregate

Before precoating with asphalt binder, aggregate for an asphalt rubber binder chip seal must comply with the gradation requirements shown in the following table:

Asphalt Rubber Binder Chip Seal Aggregate Gradation

Quality characteristic	Test method	Requirement	
Gradation (% passing by weight) Sieve size:	California Test 202	1/2"	3/8"
3/4"		100	100
1/2"		85–90	95–100
3/8"		0–30	70–85
No. 4		0–5	0–15
No. 8		--	0–5
No. 200		0–1	0–1

37-2.04C Construction

37-2.04C(1) General

Reserved

37-2.04C(2) Equipment

Distributor trucks must be equipped with:

1. Mixing and heating unit
2. Observation platform on the rear of the truck for an observer on the platform to see the nozzles and unplug them if needed

37-2.04C(3) Asphalt Rubber Binder Application

Apply the asphalt rubber binder when the ambient temperature is from 60 to 105 degrees F and the pavement surface temperature is at least 55 degrees F.

Do not apply the asphalt rubber binder unless enough aggregate is available at the job site to cover the asphalt rubber binder within 2 minutes. Intersections, turn lanes, gore points, and irregular areas must be covered within 15 minutes.

Do not apply asphalt rubber binder when pavement is damp or during high wind conditions. If authorized, you may adjust the distributor bar height and distribution speed and use shielding equipment during high wind conditions.

When applied, the temperature of the asphalt rubber binder must be from 385 to 415 degrees F.

Apply the asphalt rubber binder at a rate from 0.55 to 0.65 gal/sq yd. You may reduce the application rate by 0.050 gal/sq yd in the wheel paths.

37-2.04C(4) Precoated Aggregate Spreading

Spread aggregate at a rate from 28 to 40 lb/sq yd. Do not spread aggregate more than 200 feet ahead of the completed initial rolling.

37-2.04C(5) Rolling and Sweeping

Perform initial rolling within 90 seconds of spreading aggregate. If authorized for final rolling, you may use a steel-wheeled roller weighing from 8 to 10 tons in static mode only.

Perform a final sweeping before Contract acceptance. The final sweeping must not dislodge aggregate.

37-2.04D Payment

Asphalt rubber binder is measured as specified for asphalt binder.

37-2.05 STRESS ABSORBING MEMBRANE INTERLAYERS

37-2.05A General

Section 37-2.05 includes specifications for placing stress absorbing membrane interlayers (SAMI).

Comply with section 37-2.04 except a flush coat is not required.

Traffic must not be allowed on a SAMI.

37-2.05B Materials

For a SAMI, aggregate must comply with the 3/8-inch gradation.

37-2.05C Construction

If a SAMI is overlaid in the same work shift, section 37-2.01C(4)(e) does not apply.

Final sweeping is not required for a SAMI.

37-2.05D Payment

Not Used

37-2.06 MODIFIED ASPHALT BINDER CHIP SEALS

Reserved

37-2.07 SCRUB SEALS

Reserved

37-3 SLURRY SEALS AND MICRO-SURFACINGS

37-3.01 GENERAL

37-3.01A General

37-3.01A(1) Summary

Section 37-3.01 includes general specifications for applying slurry seals and micro-surfacings.

37-3.01A(2) Definitions

Reserved

37-3.01A(3) Submittals

At least 15 days before starting placement of a slurry seal or micro-surfacing, submit:

1. Samples for:
   - 1.1. Asphaltic emulsion slurry seal, two 1-quart wide mouth plastic containers with screw top lid of asphaltic emulsion
   - 1.2 Polymer modified asphaltic emulsion slurry seal, two 1-quart wide mouth plastic containers with screw top lid of polymer modified asphaltic emulsion
   - 1.3. Micro-surfacing, two 1-quart wide mouth plastic containers with screw top lid of micro-surfacing emulsion
2. Asphaltic emulsion, polymer modified asphaltic emulsion, or micro-surfacing emulsion data as follows:
   - 2.1. Supplier and Type/Grade of asphaltic emulsion
   - 2.2. Type of modifier polymer for polymer modified asphaltic emulsion or micro-surfacing emulsion
   - 2.3. Copy of the specified test results for asphaltic emulsion, polymer modified asphaltic emulsion, or micro-surfacing emulsion
3. 50 lb of aggregate
4. Aggregate test results for the followings:
   - 4.1. Gradation
   - 4.2. Los Angeles Rattler
   - 4.3. Percent of crushed particles

4.4 Sand equivalent
4.5 Durability

At least 10 days before starting placement of a slurry seal or micro-surfacing, submit a laboratory report of test results and the proposed mix design from an authorized laboratory. The authorized laboratory must sign the laboratory report and mix design.

The report must include:

1. Test results used in the mix design compared with specification requirements
2. Proportions based on the dry weight of aggregate, including ranges, for:
   2.1. Aggregate
   2.2. Water
   2.3. Additives
   2.4. Mineral filler
   2.5. Slurry seal emulsion or micro-surfacing emulsion residual asphalt content
3. Recommended changes to the proportions based on heating the mixture to 100 degrees F and mixing for 60 seconds, if atmospheric temperatures during application will be 90 degrees F or above, for:
   3.1. Water
   3.2. Additives
   3.3. Mineral filler
4. Quantitative moisture effects on the aggregate's unit weight determined under ASTM C29M

If the mix design consists of the same materials covered by a previous laboratory report, you may submit the previous laboratory report that must include material testing data performed within the previous 12 months for authorization.

If you change any of the materials in the mix design, submit a new mix design and laboratory report at least 10 days before starting slurry seal or micro-surfacing work.

Submit a certificate of compliance as specified for asphaltic emulsion in section 94-1.01C with each shipment of asphaltic emulsion, polymer modified asphaltic emulsion or micro-surfacing emulsion.

Submit quality control test results for the quality characteristics within the reporting times allowance after sampling shown in the following table:

Quality Control Test Reporting Requirements

Quality characteristic	Maximum reporting time allowance
Los Angeles Rattler loss (max, %)	2 business days
Percent of crushed particles (min, %)	2 business days
Durability (min)	2 business days
Resistance of fine aggregate to degradation by abrasion in the Micro-Deval Apparatus (% loss by weight)	2 business days
Gradation (% passing by weight)	48 hours
Sand equivalent (min)	48 hours
Moisture content (%)	48 hours

Within 3 days after taking asphaltic emulsion, polymer modified asphaltic emulsion or micro-surfacing emulsion quality control samples, submit the authorized laboratory's test results.

37-3.01A(4) Quality Assurance

37-3.01A(4)(a) General

Your authorized laboratory must be able to perform International Slurry Surfacing Association tests and mix design.

37-3.01A(4)(b) Quality Control

37-3.01A(4)(b)(i) General

Reserved

37-3.01A(4)(b)(ii) Aggregate

For aggregate, the authorized laboratory must perform sampling and testing at the specified frequency and location for the following quality characteristics:

Aggregate Quality Control

Quality characteristic	Test method	Minimum sampling and testing frequency	Location of sampling
Los Angeles Rattler loss (max, %) At 500 revolutions	California Test 211	1st day of production	See California Test 125
Percent of crushed particles (min, %)	AASHTO T 335	1st day of production	See California Test 125
Sand equivalent (min)	California Test 217	1 per working stockpile per day	See California Test 125
Resistance of fine aggregate to degradation by abrasion in the Micro-Deval Apparatus (% loss by weight)	ASTM D7428	1 per working stockpile per day	See California Test 125
Gradation (% passing by weight)	California Test 202	1 per working stockpile per day	See California Test 125
Moisture content, from field stockpile (%)	AASHTO T 255[a]	1 per working stockpile per day	See California Test 125

[a]Test aggregate moisture at field stockpile every 2 hours if you are unable to maintain the moisture content to within a maximum daily variation of ±0.5 percent.

37-3.01A(4)(b)(iii) Slurry Seals and Micro-surfacings

Reserved

37-3.01A(4)(c) Department Acceptance

Slurry Seal and micro-surfacing acceptance is based on:

1. Visual inspection for the following:
   - 1.1. Uniform surface texture throughout the work limits.
   - 1.2. Marks in the surface:
     - 1.2.1. Up to 4 marks in the completed slurry seal or micro-surfacing surface that are up to 1 inch wide and up to 6 inches long per 1000 square feet of slurry seal or micro-surfacing placed.
     - 1.2.2. No marks in the completed slurry seal or micro-surfacing surface that are over 1 inch wide or 6 inches long.
   - 1.3. Excessive raveling consisting of the separation of the aggregate from the asphaltic emulsion, polymer modified asphaltic emulsion or micro-surfacing emulsion.
   - 1.4. Bleeding consists of the occurrence of a film of asphaltic material on the surface of the slurry seal or micro-surfacing.
   - 1.5. Delaminating of slurry seal or micro-surfacing from the existing pavement.
   - 1.6. Rutting or wash-boarding.
2. Department's sampling and testing for compliance with the requirements for aggregate shown in the following table:

Aggregate Gradation Acceptance Criteria

Quality characteristic	Test method	Requirements		
Gradation (% passing by weight) Sieve Size:	California Test 202	Type I	Type II	Type III
3/8"		--	100	100
No. 4		100	94–100	70–90
No. 8		90–100	65–90	45–70
No. 16		60–90	40–70	28–50
No. 30		40–65	25–50	19–34
No. 200		10–20	5–15	5–15

An aggregate gradation test represents 300 tons or 1 day's production, whichever is less.

If test results for aggregate gradation do not comply with the specifications, you may remove the slurry seal or micro-surfacing represented by the test results or request it remain in place with a payment deduction. If your request is authorized, the Department deducts:

1. $1.75 per ton of slurry seal for each noncompliant aggregate gradation
2. $2.00 per ton of micro-surfacing for each noncompliant aggregate gradation

37-3.01B Materials

37-3.01B(1) General

Additional water must not cause separation of the asphaltic emulsion, polymer modified asphaltic emulsion or micro-surfacing emulsion from the aggregate before placement.

You may use an additive that does not adversely affect the slurry seal or micro-surfacing.

37-3.01B(2) Aggregate

Aggregate must be rock dust. Aggregate must be free from vegetable matter, deleterious substances, caked or clay lumps, and oversized particles.

Aggregate for a slurry seal and micro-surfacing must comply with the gradations shown in the following table:

Aggregate Gradation

Quality characteristic	Test method	Requirements		
Gradation (% passing by weight) Sieve size:	California Test 202	Type I	Type II	Type III
3/8"		--	100	100
No. 4		100	94–100	70–90
No. 8		90–100	65–90	45–70
No. 16		60–90	40–70	28–50
No. 30		40–65	25–50	19–34
No. 200		10–20	5–15	5–15

37-3.01C Construction

37-3.01C(1) General

Before applying slurry seals or micro-surfacings, cover manholes, valve and monument covers, grates, and other exposed facilities located within the area of application using plastic or oil resistant construction paper secured by tape or adhesive to the facility being covered. Reference the covered facilities with enough control points to relocate the facilities after application of the slurry seals or micro-surfacings.

37-3.01C(2) Proportioning

Proportion slurry seal and micro-surfacing ingredients in compliance with the authorized mix design.

37-3.01C(3) Mixing and Spreading Equipment

37-3.01C(3)(a) General

Mixing and spreading equipment for slurry seals and micro-surfacings must proportion the asphaltic emulsions, water, aggregate, and any additives by volume and mix them in continuous pug mill mixers.

Introduce emulsions into the mixer with a positive displacement pump. If you use a variable-rate pump, the adjusting unit must be sealed in its calibrated position.

Introduce water into the mixer through a meter that measures gallons.

Choose a truck mounted mixer-spreader or continuous self-loading mixer spreader.

37-3.01C(3)(b) Truck Mounted Mixer Spreaders

Truck mounted mixer spreaders must comply with:

1. Rotating and reciprocating equipment must be covered with metal guards.
2. Proportion aggregate using a belt feeder with an adjustable cutoff gate. The Engineer verifies the height of the gate opening.
3. Belt feeder must have a depth monitor device. The depth monitor device must automatically shut down power to the belt feeder when the aggregate depth is less than 70 percent of the target depth.
4. Separate monitor device must detect the revolutions of the belt feeder. This device must automatically shut down power to the belt feeder if it detects no revolutions. If the belt feeder is an integral part of the equipment's drive chain, the monitor device is not required.
5. Aggregate belt feeder must be connected directly to the drive on the emulsion pump. The aggregate feeder drive shaft must have a revolution counter reading the nearest 0.10 revolution for micro-surfacing, and nearest 1 revolution for slurry seal.
6. Emulsion storage must be equipped with a device that automatically shuts down power to the emulsion pump and aggregate belt feeder when the level of stored emulsion is lowered. To allow for normal fluctuations, there may be a delay of 3 seconds between detection of low emulsion storage levels or low aggregate depths and automatic power shut down.
7. Emulsion storage must be located immediately before the emulsion pump.
8. Emulsion storage tank must have a temperature indicator at the pump suction level. The indicator must be accurate to ±5 degrees F.
9. No-flow and revolution warning devices must be in working condition. Low-flow indicators must be visible while walking alongside the equipment.

37-3.01C(3)(c) Continuous Self-Loading Mixer Spreaders

Continuous self-loading mixer spreaders must be automatically sequenced and self-propelled. The mixing machine must deliver each material to a double shafted mixer and discharge the mixed material on a continuous flow basis. The mixing machines must have sufficient storage capacity to maintain a continuous supply of material to the proportioning controls. The mixing machine operators must have full control of forward and reverse speeds during placement.

37-3.01C(3)(d) Spreader Boxes

The spreader boxes used to spread slurry seals and micro-surfacings must be:

1. Capable of spreading the slurry seal or micro-surfacing a minimum of 12 feet wide and preventing the loss of slurry seal or micro-surfacing.
2. Equipped with flexible rubber belting on each side. The belting must contact the pavement to prevent the loss of slurry seal or micro-surfacing from the box.
3. Equipped to uniformly apply the slurry seal or micro-surfacing on superelevated sections and shoulder slopes. Micro-surfacing spreader box must be equipped with reversible motor driven augers.
4. Equipped with a series of strike-off devices at its rear.
   - 4.1. The leading strike off device must be:
     - 4.1.1. Fabricated of a suitable material such as steel or stiff rubber
     - 4.1.2. Designed to maintain close contact with the pavement during spreading
     - 4.1.3. Capable of obtaining the specified thickness
     - 4.1.4. Capable of being adjusted to the various pavement cross sections
   - 4.2. The final strike-off device must be:
     - 4.2.1. Fabricated of flexible material that produces a uniform texture in the finished surface

4.2.2. Cleaned daily and changed if longitudinal scouring occurs in the slurry seal of micro-surfacing

5. Clean and free of slurry seal or micro-surfacing at the start of each work shift.

37-3.01C(3)(e) Shoulder Equipment

Spread the slurry seal or micro-surfacing on shoulders with a device such as an edge box that forms clean and straight joints and edges.

37-3.01C(3)(f) Equipment Calibration

Equipment calibration must comply with the *MPQP*. Notify the Engineer at least 5 business days before calibrating.

If the Department authorizes a truck or continuous mixer spreader, its calibration is valid for 6 months provided you:

1. Use the same truck or continuous mixer spreader verified with a unique identifying number
2. Use the same materials in compliance with the authorized mix design
3. Do not perform any repair or alteration to the proportioning systems

Calibrate the adjustable cut-off gate settings of each truck or continuous mixer spreader on the project to achieve the correct delivery rate of aggregate and emulsion per revolution of the aggregate feeder under the *MPQP*.

Checks must be performed for each aggregate source using an authorized vehicle scale.

Individual checks of the aggregate belt feeder's delivery rate to the pug mill mixer must not vary more than 2 percent from the average of 3 runs of at least 3 tons each.

Before using a variable-rate emulsion pump, the pump must be calibrated and sealed in the calibrated condition under the *MPQP*.

Individual checks of the emulsion pump's delivery rate to the pug mill mixer must not vary more than 2 percent from the average of 3 runs of at least 500 gal each.

37-3.01C(4) Surface Preparation

Immediately before applying slurry seals or micro-surfacings, clean the surface to receive slurry seals or micro-surfacings by removing any extraneous material affecting adhesion of the slurry seal or micro-surfacing with the existing surface. Use self-propelled power brooms or other methods such as flushing to clean the existing pavement.

37-3.01C(5) Placement

37-3.01C(5)(a) General

If truck-mounted mixer-spreaders are used, keep at least 2 operational spreaders at the job site during placement.

Spread slurry seals and micro-surfacings uniformly and do not spot, rehandle, or shift the mixture. However in areas inaccessible to spreading equipment, spread the slurry seal or micro-surfacing mixtures with hand tools or other authorized methods. If placing with hand tools, lightly dampen the area first.

You may fog the roadway surface with water ahead of the spreader box. The fog spray must be adjusted for pavement:

1. Temperature
2. Surface texture
3. Dryness

You determine the application rates for slurry seals or micro-surfacings and the Engineer authorizes the application rates. Spread within 10 percent of authorized rate.

The mixtures must be uniform and homogeneous after spreading, and there must not be separation of the emulsion and aggregate after setting.

37-3.01C(5)(b) Weather Conditions

Only place slurry seals or micro-surfacings if both the pavement and air temperatures are at least 50 degrees F and rising. The expected high temperature must be at least 65 degrees F within 24 hours after placement.

Do not place slurry seals or micro-surfacings if rain is imminent or the air temperature is expected to be below 36 degrees F within 24 hours after placement.

37-3.01C(5)(c) Joints

Transverse and longitudinal joints must be:

1. Uniform
2. Straight
3. Neat in appearance
4. Without material buildup
5. Without uncovered areas

Transverse joints must be butt-type joints.

Prevent double placement at transverse joints over previously placed slurry seals or micro-surfacings.

Place longitudinal joints:

1. On centerlines, lane lines, edge lines, or shoulder lines
2. With overlaps not more than 4 inches

You may request other longitudinal joint patterns if they do not adversely affect the slurry seals or micro-surfacings.

The maximum difference between the pavement surface and the bottom edge of a 12-foot straightedge placed perpendicular to the longitudinal joint must be 0.04 foot.

37-3.01C(5)(d) Finished Surfaces

Finished slurry seals or micro-surfacings must be smooth and free of irregularities such as scratch or tear marks. You may leave up to 4 marks that are up to 1 inch wide and 6 inches long per 75 linear feet of slurry seal or micro-surfacing placed. Do not leave any marks that are over 1 inch wide or 6 inches long.

37-3.01C(5)(e) Maintenance Sweeping

Sweep the slurry seals or micro-surfacings 24 hours after placement without damaging the slurry seals or micro-surfacings. For 4 days afterwards, sweep the slurry seals or micro-surfacings daily unless determined otherwise by the Engineer.

37-3.01C(5)(f) Repair of Early Distress

The slurry seals or micro-surfacings must not show bleeding, raveling, separation, or other distresses for 15 days after placing. If bleeding, raveling, delaminating, rutting, or wash-boarding occurs after placing the slurry seals or micro-surfacings, make repairs using an authorized method.

37-3.01D Payment

Not Used

37-3.02 SLURRY SEALS

37-3.02A General

37-3.02A(1) Summary

Section 37-3.02 includes specifications for applying slurry seals.

Applying a slurry seal consists of spreading a mixture of asphaltic emulsion or polymer modified asphaltic emulsion, aggregate, additives, and water on a surface or pavement.

37-3.02A(2) Definitions

Reserved

37-3.02A(3) Submittals

Immediately after sampling, submit two 1-quart wide mouth plastic containers of asphaltic emulsion or polymer modified asphaltic emulsion taken in the presence of the Engineer. Samples must be submitted in insulated shipping containers.

37-3.02A(4) Quality Assurance

37-3.02A(4)(a) General

Reserved

37-3.02A(4)(b) Quality Control

37-3.02A(4)(b)(i) General

Take samples of asphaltic emulsion and polymer modified asphaltic emulsion from the tank truck at mid load or from a sampling tap or thief. Before taking samples, draw and dispose of 1 gallon. In the presence of the Engineer take two 1-quart samples in wide mouth plastic containers with lined, sealed lids for acceptance testing.

37-3.02A(4)(b)(ii) Asphaltic Emulsion

For asphaltic emulsions, the authorized laboratory must perform quality control sampling and testing at the specified frequency and location for the following quality characteristics:

Asphaltic Emulsion

Quality characteristic	Test method	Minimum sampling and testing frequency	Sampling location
Saybolt Furol Viscosity, at 25 °C (Saybolt Furol seconds)	AASHTO T 59	Minimum 1 per day per delivery truck	Delivery truck
Sieve Test (%)			
Storage stability, 1 day (%)			
Residue by distillation (%)			
Particle charge[a]			
Tests on Residue from Distillation Test:			
Penetration, 25 °C	AASHTO T 49	Minimum 1 per day per delivery truck	Delivery truck
Ductility	AASHTO T 51		
Solubility in tricloroethylene	AASHTO T 44		

[a]If the result of the particle charge is inconclusive, the asphaltic emulsion must be tested for pH under ASTM E70. Grade QS1h asphaltic emulsion must have a minimum pH of 7.3. Grade CQS1h asphaltic emulsion must have a maximum pH of 6.7.

37-3.02A(4)(b)(iii) Polymer Modified Asphaltic Emulsion

For polymer modified asphaltic emulsions, the authorized laboratory must perform quality control sampling and testing at the specified frequency and location for the following quality characteristics:

Polymer Modified Asphaltic Emulsion

Quality characteristic	Test method	Minimum sampling and testing frequency	Sampling Location
Tests on emulsion:			
Saybolt Furol Viscosity at 25 °C (Saybolt Furol seconds)	AASHTO T 59	Minimum 1 per day per delivery truck	Delivery truck
Sieve test (%)	AASHTO T 59		
Storage stability after 1 day (%)	AASHTO T 59		
Residue by evaporation (min, %)	California Test 331		
Particle charge	AASHTO T 59		
Tests on residue by evaporation:			
Penetration at 25 °C	AASHTO T 49	Minimum 1 per day per delivery truck	Delivery truck
Ductility at 25 °C (min, mm)	AASHTO T 51		
Torsional recovery (min, %) Or Polymer content based on residual asphalt (min, %)	California Test 332 California Test 401		

37-3.02A(4)(c) Department Acceptance

For a slurry seal asphaltic emulsion and polymer modified asphaltic emulsion, acceptance is based on the Department's sampling and testing for compliance with the requirements for the quality characteristics specified.

Aggregate acceptance is based on the Department's sampling and testing for compliance with the requirements shown in the following table:

Aggregate Acceptance Criteria

Quality characteristic	Test method	Requirement
Los Angeles Rattler loss (max, %) At 500 revolutions	California Test 211[a]	35
Percent of crushed particles (min, %)	California Test 205	95
Durability (min)	California Test 229	55
Sand equivalent (min) Type I Type II Type III	California Test 217	 45 55 60

[a]California Test 211 must be performed on the source aggregate before crushing.

A sand equivalent test represents 300 tons or 1 day's production, whichever is less.

If test results for sand equivalent do not comply with the specifications, you may remove the slurry seal represented by the test results or request it remain in place with a payment deduction. If your request is authorized, the Department deducts $1.75 per ton of slurry seal for each noncompliant sand equivalent test.

37-3.02B Materials

37-3.02B(1) General

Reserved

37-3.02B(2) Asphaltic Emulsions

An asphaltic emulsion must comply with the requirements in Section 94. The asphaltic emulsion must be Grade CQS1h.

37-3.02B(3) Polymer Modified Asphaltic Emulsions

A polymer modified asphaltic emulsion must:

1. Consist of an elastomeric polymer mixed with an asphaltic material uniformly emulsified with water and an emulsifying or stabilization agent.
2. Use either neoprene polymer or butadiene and styrene copolymer. The polymer must be homogeneous and milled into the asphaltic emulsion at the colloid mill.
3. Be Grade PMCQS1h and must comply with the requirements shown in the following table:

Polymer Modified Asphaltic Emulsion Requirements

Quality characteristic	Test method	Requirement
Tests on emulsion:		
Saybolt Furol Viscosity at 25 °C (Saybolt Furol seconds)	AASHTO T 59	15–90
Sieve test (%)	AASHTO T 59	0–0.3
Storage stability after 1 day (%)	AASHTO T 59	0–1
Residue by evaporation (min, %)	California Test 331	60
Particle charge	AASHTO T 59	Positive
Tests on residue by evaporation:		
Penetration at 25 °C	AASHTO T 49	40–90
Ductility at 25 °C (min, mm)	AASHTO T 51	400
Torsional recovery (min, %) Or Polymer content based on residual asphalt (min, %)	California Test 332 California Test 401	18 2.5

37-3.02B(4) Aggregate

Aggregate must comply with the quality characteristic requirements shown in the following table:

Aggregate Requirements

Quality characteristic	Test method	Requirement
Los Angeles Rattler loss (max, %) At 500 revolutions	California Test 211[a]	35
Percent of crushed particles (min, %)	California Test 205	95
Durability (min)	California Test 229	55
Sand equivalent (min) Type I Type II Type III	California Test 217	 45 55 60

[a]California Test 211 must be performed on the source aggregate before crushing. The aggregate supplier must certify that the crushed aggregate being used on the project is manufactured from the source aggregate complying with the LA rattler requirements.

37-3.02B(5) Slurry Seal Mix Design

The slurry seal mix design, using project source aggregate, an asphaltic emulsion, and set-control agents if any, must comply with the requirements shown in the following table:

Slurry Seal Mix Design Requirements

Quality characteristic	Test method[a]	Requirement
Consistency (max, mm)	Technical Bulletin 106	30
Wet stripping	Technical Bulletin 114	Pass
Compatibility	Technical Bulletin 115	Pass[b]
Cohesion test, within 1 hour (min, kg-mm)	Technical Bulletin 139	200
Wet track abrasion (max, g/m^2)	Technical Bulletin 100	810

[a]Test methods are by the International Slurry Surfacing Association.
[b]Mixing test must pass at the maximum expected air temperature at the job site during placement.

The mix design must have the percent of asphaltic residue, based on percentage by weight of the dry aggregate, within the ranges shown in the following table:

Slurry seal type	Residue range
Type I	10–16
Type II	7.5–13.5
Type III	6.5–12.0

Determine the exact percentage based on the design asphalt binder content and the asphalt residual content of the asphaltic emulsion furnished.

37-3.02C Construction

37-3.02C(1) General

Reserved

37-3.02C(2) Proportioning

After proportioning, slurry seal mixtures must be workable.

37-3.02C(3) Mixing and Spreading Equipment

Reserved

37-3.02C(4) Placement

The slurry seal spread rates must be within the ranges shown in the following table:

Slurry Seal Spread Rates

Slurry seal type	Application range (lb of dry aggregate/sq yd)
Type I	8–12
Type II	10–18
Type III	20–25

Within 4 hours after placement, slurry seals must be set enough to allow traffic without pilot cars. Protect slurry seals from damage until it has set and will not adhere or be picked up by vehicle tires. Slurry seals must not exhibit distress from traffic such as bleeding, raveling, separation or other distresses.

37-3.02D Payment

The payment quantity for slurry seal is the weight determined by combining the weights of the aggregate and asphaltic emulsion or polymeric asphaltic emulsion. The payment quantity for slurry seal does not include the weights of the added water and set-control additives.

37-3.03 MICRO-SURFACINGS

37-3.03A General

37-3.03A(1) Summary

Section 37-3.03 includes specifications for applying micro-surfacings.

Applying a micro-surfacing consists of spreading a mixture of a micro-surfacing emulsion, water, additives, mineral filler, and aggregate on the pavement.

37-3.03A(2) Definitions

Reserved

37-3.03A(3) Submittals

Immediately after sampling, submit two 1-quart wide mouth plastic containers of micro-surfacing emulsion taken in the presence of the Engineer. Samples must be submitted in insulated shipping container.

37-3.03A(4) Quality Assurance

37-3.03A(4)(a) General

Reserved

37-3.03A(4)(b) Quality Control

37-3.03A(4)(b)(i) General

Reserved

37-3.03A(4)(b)(ii) Micro-surfacing Emulsions

Take samples from the truck tank at mid load from a sampling tap or thief. Before taking samples, draw and dispose of 1 gallon. In the presence of the Engineer, take two 1-quart wide mouth plastic containers for acceptance testing.

For a micro-surfacing emulsion, the authorized laboratory must perform quality control sampling and testing at the specified frequency and location for the quality characteristics shown in the following table:

Micro-Surfacing Emulsion

Quality characteristic	Test method	Minimum sampling and testing frequency	Sampling location
Tests on emulsion:			
Saybolt Furol Viscosity, at 25°C (Saybolt Furol seconds)	AASHTO T 59	Minimum 1 per day per delivery truck	Delivery truck
Storage stability, 1 day (max, %)[a]			
Sieve test (max, %)			
Residue by evaporation (min, %)	California Test 331	Minimum 1 per day per delivery truck	Delivery truck
Tests on residue from evaporation test:			
Penetration at 25 °C	AASHTO T 49	Minimum 1 per day per delivery truck	Delivery truck
Softening point (min, ºC)	AASHTO T 53		

[a]Storage stability test will be run if the storage exceeds 48 hours

37-3.03A(4)(c) Department Acceptance

For micro-surfacing emulsions, acceptance is based on the Department's sampling and testing for compliance with the requirements shown in the following table:

Micro-surfacing Emulsion Acceptance Criteria

Quality characteristic	Test method	Requirement
Tests on emulsion:		
Saybolt Furol Viscosity at 25 °C (Saybolt Furol seconds)	AASHTO T 59	15–90
Sieve test (%)	AASHTO T 59	0.30
Storage stability, 1 day (max, %)	AASHTO T 59	0–1
Settlement[a], 5 days (max, %)	ASTM D244	5
Residue by evaporation (min, %)	California Test 331	62
Tests on residue by evaporation:		
Penetration at 25 °C	AASHTO T 49	40–90
Softening point (min, ºC)	AASHTO T 53	57

[a]Settlement test on emulsion is not required if used within 48 hours of shipment.

Acceptance of aggregate, except mineral filler, is based on the Department's sampling and testing for compliance with the requirements shown in the following table:

Aggregate Acceptance Criteria

Quality characteristic	Test method	Requirement
Los Angeles Rattler loss (max, %) At 500 revolutions	California Test 211[a]	35
Percent of crushed particles (min, %)	California Test 205	95
Durability (min)	California Test 229	65
Sand equivalent (min) Type II Type III	California Test 217	 65 65

[a]California Test 211 must be performed on the aggregate before crushing. The aggregate supplier must certify that the crushed aggregate being used on the project is manufactured from the source aggregate complying with the LA rattler requirements.

An aggregate sand equivalent test represents 300 tons or 1 day's production, whichever is less.

If the test results for aggregate sand equivalent do not comply with the specifications, you may remove the micro-surfacing represented by the test results or request it remain in place with a payment deduction. If your request is authorized, the Department deducts $2.00 per ton of micro-surfacing for each noncompliant aggregate sand equivalent test.

37-3.03B Materials

37-3.03B(1) General

Reserved

37-3.03B(2) Micro-surfacing Emulsions

A micro-surfacing emulsion must be a homogeneous mixture of asphalt, an elastomeric polymer and an emulsifier solution.

Add an elastomeric polymer modifier to asphalt or emulsifier solution before emulsification. An elastomeric polymer solid must be a minimum of 3 percent by weight of the micro-surfacing emulsion's residual asphalt.

A micro-surfacing emulsion must comply with the requirements shown in the following table:

Micro-surfacing Emulsion Requirements

Quality characteristic	Test method	Requirement
Tests on emulsion:		
Saybolt Furol Viscosity at 25 °C (Saybolt Furol seconds)	AASHTO T 59	15–90
Sieve test (%)	AASHTO T 59	0.30
Storage stability, 1 day (max, %)	AASHTO T 59	0–1
Settlement[a], 5 days (max, %)	ASTM D244	5
Residue by evaporation (min, %)	California Test 331	62
Tests on residue by evaporation:		
Penetration at 25 °C	AASHTO T 49	40–90
Softening point (min, ºC)	AASHTO T 53	57

[a]Settlement test on emulsion is not required if used within 48 hours of shipment.

37-3.03B(3) Aggregate

Aggregate must comply with the quality characteristic requirements shown in the following table:

Aggregate Requirements

Quality characteristic	Test method	Requirement
Los Angeles Rattler loss (max, %) At 500 revolutions	California Test 211[a]	35
Percent of crushed particles (min, %)	California Test 205	95
Durability (min)	California Test 229	65
Sand equivalent (min) Type II Type III	California Test 217	 65 65

[a]California Test 211 must be performed on the source aggregate before crushing. The aggregate supplier must certify that the crushed aggregate being used on the project is manufactured from the source aggregate complying with the LA rattler requirements.

37-3.03B(4) Mineral Fillers

If a mineral filler is used, it must be type I or type II Portland cement. A mineral filler used during mix design must be used during production.

37-3.03B(5) Micro-Surfacing Mix Designs

The micro-surfacing mix design must have the material proportion limits shown in the following table:

Micro-surfacing Mix Design Proportion Limits

Material	Proportion limits
Micro-surfacing emulsion asphalt residual content (% of dry weight of aggregate)	5.5–10.5
Water and additives	As Required
Mineral filler (% of dry weight of aggregate)	0–3

The micro-surfacing mix design must comply with the requirements shown in the following table:

Micro-surfacing Mix Design Requirements

Quality characteristics	Test method[a]	Requirement
Wet cohesion At 30 minutes (set) (min, kg-cm) At 60 minutes (traffic) (min, kg-cm)	Technical Bulletin 139	 12 20
Excess asphalt (max, g/m^2)	Technical Bulletin 109	540
Wet stripping (min, %)	Technical Bulletin 114	90
Wet track abrasion loss 6-day soak (max, g/m^2)	Technical Bulletin 100	 810
Displacement Lateral (max, %) Specific gravity after 1000 cycles of 57 kg (max)	Technical Bulletin 147A	 5 2.10
Classification compatibility (min, grade points)	Technical Bulletin 144	(AAA, BAA) 11
Mix time at 25 °C (min)	Technical Bulletin 113	Controllable to 120 seconds

[a]Test methods are by the International Slurry Surfacing Association.

37-3.03B(6) Tack Coats

If there is a bid item for tack coat, you must coat the pavement surface with an asphaltic emulsion mixed with additional water before applying a micro-surfacing. The maximum ratio of water to asphaltic emulsion must be 2 to 1. Apply the tack coat at a rate from 0.08 to 0.15 gal/sq yd. The exact rate must be authorized.

You determine the grade of slow-setting or quick setting asphaltic emulsion to be used.

37-3.03C Construction

37-3.03C(1) General

Reserved

37-3.03C(2) Proportioning

Field conditions may require adjustments to the proportions within the authorized mix design during construction.

37-3.03C(3) Mixing and Spreading Equipment

37-3.03C(3)(a) General

Reserved

37-3.03C(3)(b) Scratch Course Boxes

Spread the scratch courses with the same type of spreader box used to spread micro-surfacings except use an adjustable steel strike-off device instead of a final strike-off device.

37-3.03C(3)(c) Wheel Path Depression Boxes

Each wheel path depression box must have adjustable strike-off device between 5 and 6 feet wide to regulate depth. The wheel path depression box must also have devices such as hydraulic augers capable of:

1. Moving the mixed material from the rear to the front of the filling chamber
2. Guiding larger aggregate into the deeper section of the wheel path depression
3. Forcing the finer material towards the outer edges of the spreader box

37-3.03C(4) Test Strips

If micro-surfacing placement will require more than 1 day, you must construct a test strip. The test strip must be:

1. From 300 to 450 feet long
2. The same as the full production micro-surfacing
3. On 1 of the application courses specified at an authorized location

4. At the same time of day or night the full production micro-surfacing is to be applied

If multiple application courses are specified, you may construct test strips over 2 days or nights.

The Engineer evaluates the test strip after traffic has used it for 12 hours. If the Engineer determines the mix design or placement procedure is unacceptable, make modifications and construct a new test strip for the Engineer's evaluation.

37-3.03C(5) Placement

37-3.03C(5)(a) General

Reserved

37-3.03C(5)(b) Repair Wheel Path Depressions

If repairing wheel path depressions is shown in plans, fill wheel path depressions and irregularities with micro-surfacing material before spreading micro-surfacing. If the depressions are less than 0.04 foot deep, fill with a scratch course. If the depressions are 0.04 foot deep or more, fill the depressions using a wheel path depression box.

Spread scratch courses by adjusting the steel strike-off of a scratch course box until it is directly in contact with the pavement surface.

Spread micro-surfacings with a wheel path depression box leaving a slight crown at the surface. Use multiple applications to fill depressions more than 0.12 foot deep. Do not apply more than 0.12 foot in a single application.

Allow traffic to compact each filled wheel path depression for a minimum of 12 hours before placing additional micro-surfacings.

37-3.03C(5)(c) Micro-surfacing Pavement Surfaces

The micro-surfacing spread rates must be within the ranges shown in the following table:

Micro-surfacing type	Application range (lb of dry aggregate/sq yd)
Type II	10–20
Type III[a]	20–32
Type III[b]	30–32

[a]Over asphalt concrete pavement
[b]Over concrete pavement and concrete bridge decks

Within 2 hours after placement, micro-surfacings must be set enough to allow traffic without pilot cars. Protect the micro-surfacings from damage until it has set and will not adhere or be picked up by vehicle tires. Micro-surfacings must not exhibit distress from traffic such as bleeding, raveling, separation or other distresses.

37-3.03D Payment

The payment quantity for micro-surfacing is the weight determined by combining the weights of the aggregate and micro-surfacing emulsion. The payment quantity for micro-surfacing does not include the weights of added water, mineral filler, and additives.

37-3.04 RUBBERIZED AND MODIFIED SLURRY SEALS

Reserved

37-4 FOG SEALS AND FLUSH COATS

37-4.01 GENERAL

37-4.01A General

37-4.01A(1) Summary

Section 37-4.01 includes general specifications for applying fog seals and flush coats.

37-4.01A(2) Definitions

Reserved

37-4.01A(3) Submittals

At least 15 days before use, submit:

1. Sample of asphaltic emulsion in two 1-quart plastic container with lined, sealed lid
2. Asphaltic emulsion information and test data as follows:
   - 2.1. Supplier
   - 2.2. Type/Grade of asphalt emulsion
   - 2.3. Copy of the specified test results for asphaltic emulsion

37-4.01B Materials

Not Used

37-4.01C Construction

37-4.01C(1) General

Reserved

37-4.01C(2) Weather Conditions

Only place a fog seal or flush coat if both the pavement and ambient temperatures are at least 50 degrees F and rising. Do not place a fog seal or flush coat within 24 hours of rain or within 24 hours of forecast rain or freezing temperatures.

37-4.01D Payment

Not Used

37-4.02 FOG SEALS

37-4.02A General

37-4.02A(1) Summary

Section 37-4.02 includes specifications for applying fog seals.

Applying a fog seal includes applying a diluted slow-setting or quick setting asphaltic emulsion.

37-4.02A(2) Definitions

Reserved

37-4.02A(3) Submittals

Immediately after sampling, submit two 1-quart plastic container of asphaltic emulsion taken in the presence of the Engineer. Samples must be submitted in insulated shipping container.

37-4.02A(4) Quality Assurance

37-4.02A(4)(a) General

Reserved

37-4.02A(4)(b) Quality Control

37-4.02A(4)(b)(i) General

Reserved

37-4.02A(4)(b)(ii) Asphaltic Emulsions

Circulate asphaltic emulsions in the distributor truck before sampling. Take samples from the distributor truck at mid load or from a sampling tap or thief. Before taking samples, draw and dispose of 1 gallon. In the presence of the Engineer, take asphalt emulsion sample in two 1-quart plastic container with lined, sealed lid.

For asphaltic emulsions, the authorized laboratory must perform quality control sampling and testing at the specified frequency and location for the following quality characteristics:

Asphaltic Emulsion

Quality characteristic	Test Method	Minimum sampling and testing frequency	Sampling location
Saybolt Furol Viscosity, at 25 °C (Saybolt Furl seconds)	AASHTO T 59	Minimum 1 per day per delivery truck	Distributor truck
Sieve Test (%)			
Storage stability, 1 day (%)			
Residue by distillation (%)			
Particle charge[a]			
Tests on Residue from Distillation Test:			
Penetration, 25 °C	AASHTO T 49	Minimum 1 per day per delivery truck	Distributor truck
Ductility	AASHTO T 51		
Solubility in tricloroethylene	AASHTO T 44		

[a]If the result of the particle charge is inconclusive, the asphaltic emulsion must be tested for pH under ASTM E70. Grade QS1h asphaltic emulsion must have a minimum pH of 7.3. Grade CQS1h asphaltic emulsion must have a maximum pH of 6.7.

37-4.02A(4)(b)(iii) Asphaltic Emulsion Spread Rates

For fog seals, the authorized laboratory must perform sampling and testing at the specified frequency and location for the following quality characteristics:

Fog Seal Quality Control Requirements

Quality characteristic	Test method	Minimum sampling and testing frequency	Location of sampling
Asphaltic emulsion spread rate (gal/sq yd)	California Test 339	2 per day	Pavement surface

37-4.02A(4)(c) Department Acceptance

Fog seal acceptance is based on:

1. Visual inspection for the following:
   1.1. Uniform surface texture throughout the work limits
   1.2. Flushing consisting of the occurrence of a film of asphaltic material on the surface
   1.4 Streaking consisting of alternating longitudinal bands of asphaltic emulsion approximately parallel with the lane line
2. The Department's sampling and testing for compliance with the requirements for the quality characteristics specified in section 94 for asphaltic emulsion
3. Department's sampling and testing for compliance with the requirements for fog seal shown in the following table:

Fog Seal Acceptance Criteria

Quality Characteristic	Test Method	Requirement
Asphaltic emulsion spread rate (gal/sq yd)	California Test 339	TV ± 10%

37-4.02B Materials

You determine the grade of slow-setting or quick setting asphaltic emulsion to be used.

37-4.02C Construction

Apply asphaltic emulsions for fog seals at a residual asphalt rate from 0.02 to 0.06 gal/sq yd.

If additional water is added to the asphaltic emulsions, the resultant mixture must not be more than 1 part asphaltic emulsion to 1 part water. You determine the dilution rate.

If the fog seals become tacky, sprinkle water as required.

If fog seals and chip seals are on the same project, the joint between the seal coats must be neat and uniform.

37-4.02D Payment

The Department does not adjust the unit price for an increase or decrease in the asphaltic emulsion quantity.

37-4.03 FLUSH COATS

37-4.03A General

37-4.03A(1) Summary

Section 37-4.03 includes specifications for applying flush coats.

Applying a flush coat includes applying a fog seal coat followed by sand.

37-4.03A(2) Definitions

Reserved

37-4.03A(3) Submittals

At least 15 days before use, submit:

1. Proposed target X values for sand gradation.
2. Gradation test results for sand

Submit quality control test results for sand gradation within 2 business days of sampling.

37-4.03A(4) Quality Assurance

37-4.03A(4)(a) General

Reserved

37-4.03A(4)(b) Quality Control

For sand, the authorized laboratory must perform sampling and testing at the specified frequency and location for the following quality characteristics:

Sand Quality Control

Quality characteristic	Test method	Minimum sampling and testing frequency	Location of sampling
Gradation (% passing by weight)	California Test 202	1 per day	See California Test 125

37-4.03A(4)(c) Department Acceptance

Flush coat acceptance is based on fog seal acceptance and the following:

1. Visual inspection for uniform application of sand.
2. Sand acceptance is based on the Department's sampling and testing for compliance with the requirements shown in the following table:

Sand Gradation Acceptance Criteria

Quality characteristic	Test method	Requirement
Gradation (% passing by weight) Sieve size:	California Test 202	
3/8"		100
No. 4		93–100
No. 8		61–99
No. 16		X ± 13
No. 30		X ± 12
No. 50		X ± 9
No.100		1–15
No. 200		0–10

NOTE: "X" is the gradation that you propose to furnish for the specific sieve size.

37-4.03B Material

37-4.03B(1) General

Reserved

37-4.03B(2) Sand

Sand must be free from deleterious coatings, clay balls, roots, bark, sticks, rags, and other extraneous material.

Sand for a flush coat must comply with the gradations shown in the following table:

Sand Gradation

Quality characteristic	Test method	Requirement
Gradation (% passing by weight) Sieve size:	California Test 202	
3/8"		100
No. 4		93–100
No. 8		61–99
No. 16		X ± 13
No. 30		X ± 12
No. 50		X ± 9
No.100		1–15
No. 200		0–10

NOTE: "X" is the gradation that you propose to furnish for the specific sieve size.

Fine aggregate sizes must be distributed such that the difference between the total percentage passing the No. 16 and No. 30 sieves is from 10 to 40, and the difference between the percentage passing the No. 30 and No. 50 sieves is from 10 to 40.

37-4.03C Construction

37-4.03C(1) General

During flush coat activities, close adjacent lanes to traffic. Do not track asphaltic emulsion on existing pavement surfaces.

Apply sand immediately after applying asphaltic emulsions.

Spread sand aggregate with a mechanical device that spreads sand at a uniform rate over the full width of a traffic lane in a single application. Spread sand at a rate from 2 to 6 lb/sq yd. You determine the application rates for sand and the Engineer authorizes the application rate.

37-4.03C(2) Sweeping

Sweep loose sand material remaining on the surface 24 hours after application.

37-4.03D Payment

The Department does not adjust the unit price for an increase or decrease in the sand cover (seal) quantity.

37-5 PARKING AREA SEALS

37-5.01 GENERAL

37-5.01A Summary

Section 37-5 includes specifications for applying parking area seals. Sealing a parking area consists of spreading a mixture of asphaltic emulsion, aggregate, polymer, and water.

37-5.01B Definitions

Reserved

37-5.01C Submittals

At least 15 days before starting placement, submit a 20 lb sample of the aggregate to be used.

At least 10 days before starting placement, submit:

1. Name of the authorized laboratory to perform testing and mix design.
2. Laboratory report of test results and a proposed mix design. The report and mix design must include the specific materials to be used and show a comparison of test results and specifications. The mix design report must include the quantity of water allowed to be added at the job site. The authorized laboratory performing the tests must sign the original laboratory report and mix design.
3. Manufacturer's data for oil seal primer and polymer.

If the mix design consists of the same materials covered by a previous laboratory report, you may submit the previous laboratory report that must include material testing data performed within the previous 12 months for authorization.

If you request substitute materials, submit a new laboratory report and mix design at least 10 days before starting placement.

Submit a certificate of compliance for the parking area seal material.

Immediately after sampling, submit two 1-quart plastic containers of parking area seal taken in the presence of the Engineer. Samples must be submitted in insulated shipping containers.

37-5.01D Quality Assurance

37-5.01D(1) General

Reserved

37-5.01D(2) Quality Control

37-5.01D(2)(a) General

Reserved

37-5.01D(2)(b) Asphaltic Emulsions

For an asphaltic emulsion, the authorized laboratory must perform quality control sampling and testing at the specified frequency and location for the following quality characteristics:

Asphaltic Emulsion

Quality characteristic	Test Method	Minimum sampling and testing frequency	Sampling location
Saybolt Furol Viscosity, at 25 °C (Saybolt Furol seconds)	AASHTO T 59	Minimum 1 per day per delivery truck	Distributor truck
Sieve Test (%)			
Storage stability, 1 day (%)			
Residue by distillation (%)			
Particle charge[a]			
Tests on Residue from Distillation Test			
Penetration, 25 °C	AASHTO T 49	Minimum 1 per day per delivery truck	Distributor truck
Ductility	AASHTO T 51		
Solubility in trichloroethylene	AASHTO T 44		

[a]If the result of the particle char is inconclusive, the asphaltic emulsion must be tested for pH under ASTM E70. Grade QS1h asphaltic emulsion must have a minimum pH of 7.3. Grade CQS1h asphaltic emulsion must have a maximum pH of 6.7.

37-5.01D(2)(c) Sand

For sand, the authorized laboratory must perform sampling and testing at the specified frequency and location for the following quality characteristics:

Sand Quality Control

Quality characteristic	Test method	Minimum sampling and testing frequency	Location of sampling
Gradation (% passing by weight)	California Test 202	One per project	See California Test 125

37-5.01D(2)(d) Parking Area Seals

For a parking area seal, the authorized laboratory must perform quality control sampling and testing at the specified frequency for the following quality characteristics:

Parking Area Seal Requirements

Quality characteristic	Test method	Frequency
Mass per liter (kg)	ASTM D244	One per project
Cone penetration (mm)	California Test 413	
Nonvolatile (%)	ASTM D2042[a]	
Nonvolatile soluble in trichloroethylene (%)		
Wet track abrasion (g/m^2)	ASTM D3910	
Dried film color	--	
Viscosity (KU)[b]	ASTM D562	

[a]Weigh 10 g of homogenous material into a previously tarred, small can. Place in a constant temperature oven at 165 ± 5 °C for 90 ± 3 minutes. Cool, reweigh, and calculate nonvolatile components as a percent of the original weight.
[b]Krebs units

37-5.01D(3) Department Acceptance

Parking area seal acceptance is based on:

1. Visual inspection for:
   - 1.1. Uniform surface texture throughout the work limits
   - 1.2 Marks in the surface:
     - 1.2.1. Up to 4 marks in the completed parking area seal that are up to 1 inch wide and up to 6 inches long per 1,000 square feet of parking area seal placed.
     - 1.2.2. No marks in the completed parking area seal surface that are over 1 inch wide or 6 inches long.

1.2. Raveling consisting of the separation of the aggregate from the asphaltic emulsion
1.3. Bleeding consisting of the occurrence of a film of asphaltic material on the surface of the parking area seal
1.4 Delaminating of the parking area seal from the existing pavement
1.5 Rutting or wash-boarding

2. The Department's sampling and testing of aggregate for compliance with 100 percent passing no. 16 sieve under California Test 202
3. The Department's sampling and testing for compliance with the requirements shown in the following table:

Parking Area Seal Acceptance Criteria

Quality characteristic	Test method	Requirement
Mass per liter (min, kg)	ASTM D244	1.1
Cone penetration (mm)	California Test 413	340–700
Nonvolatile (min, %)	ASTM D2042[a]	50
Nonvolatile soluble in trichloroethylene (%)		10–35
Wet track abrasion (max, g/m^2)	ASTM D3910	380
Dried film color	--	Black
Viscosity (min, KU)[b]	ASTM D562	75

[a]Weigh 10 g of homogenous material into a previously tared, small ointment can. Place in a constant temperature oven at 165 ± 5 °C for 90 ± 3 minutes. Cool, reweigh, and calculate nonvolatile components as a percent of the original weight.
[b]Krebs units

37-5.02 MATERIALS

37-5.02A General

Aggregate must be clean, hard, durable, uncoated, and free from organic and deleterious substances. One hundred percent of the aggregate must pass the no. 16 sieve.

Asphaltic emulsion must be either Grade SS1h or CSS1h, except the values for penetration at 25 degrees C for tests on residue from distillation must be from 20 to 60.

Polymer must be either neoprene, ethylene vinyl acetate, or a blend of butadiene and styrene.

Oil seal primer must be a quick-drying emulsion with admixtures. Oil seal primer must be manufactured to isolate the parking area seal from pavement with residual oils, petroleum grease, and spilled gasoline.

Crack sealant must comply with section 37-6.

Water must be potable and not separate from the emulsion before the material is placed.

37-5.02B Mix Design

The proposed mix design for a parking area seal must comply with the requirements shown in the following table:

Parking Area Seal Mix Design Requirements

Quality characteristic	Test method	Requirement
Mass per liter (min, kg)	ASTM D244	1.1
Cone penetration (mm)	California Test 413	340–700
Nonvolatile (min, %)	ASTM D2042[a]	50
Nonvolatile soluble in trichloroethylene (%)		10–35
Wet track abrasion (max, g/m^2)	ASTM D3910	380
Dried film color	--	Black
Viscosity (min, KU)[b]	ASTM D562	75

[a]Weigh 10 g of homogenous material into a previously tarred, small ointment can. Place in a constant temperature oven at 165 ± 5 °C for 90 ± 3 minutes. Cool, reweigh, and calculate nonvolatile components as a percent of the original weight.
[b]Krebs units

A parking area seal must contain a minimum of 2 percent polymer by volume of undiluted asphaltic emulsion.

37-5.02C Proportioning

Parking area seal ingredients must be mixed at a central plant. The plant must include mechanical or electronic controls that consistently proportion the ingredients. Mix an asphaltic emulsion with the other ingredients mechanically.

Store the parking area seal in a tank equipped with mixing or agitation devices. Keep stored materials thoroughly mixed. Protect stored materials from freezing conditions.

37-5.03 CONSTRUCTION

37-5.03A General

Request that the Engineer shut off the irrigation control system at least 5 days before placing the seal. Do not water plants adjacent to the seal at least 24 hours before and after the seal coat placement.

37-5.03B Surface Preparations

If cracks in the existing pavement are from 1/4 to 1 inch wide, treat the cracks under section 37-6. Do not place the parking area seals until the Engineer determines that the crack treatments are cured.

If cracks in the existing pavement are greater than 1 inch wide, the Engineer orders the repair. This work is change order work.

After any crack treatment and before placing parking area seals, clean the pavement surface, including removal of oil and grease spots. Do not use solvents.

If cleaning the pavement with detergents, thoroughly rinse with water. Allow all water to dry before placing parking area seals.

You must seal oil and grease spots that remain after cleaning. Use an oil seal primer and comply with the manufacturer's instructions.

If the existing pavement has oil and grease spots that do not come clean and sealing is insufficient, the Engineer orders the repair of the pavement. This work is change order work.

Before placing the parking area seals, dampen the pavement surface using a distributor truck. Place the seal on the damp pavement but do not place it with standing water on the pavement.

37-5.03C Placement

If adding water at the job site based on the manufacturer's instructions for consistency and spreadability, do not exceed 15 percent by volume of undiluted asphaltic emulsion.

Place the parking area seals in 1 or more application. The seals must be uniform and smooth, free of ridges or uncoated areas.

If placing in multiple applications, allow the last application to thoroughly dry before the subsequent application.

Do not allow traffic on the parking area seals for at least 24 hours after placement.

Do not stripe over the parking area seals until it is dry.

37-5.04 PAYMENT

The payment quantity for parking area seal is the weight determined by combining the weights of the aggregate and asphaltic emulsion. The payment quantity for parking area seal does not include the added water and set-control additive.

37-6 CRACK TREATMENTS

37-6.01 GENERAL

37-6.01A Summary

Section 37-6 includes specifications for treating cracks in asphalt concrete pavement.

37-6.01B Definitions

Reserved

37-6.01C Submittals

If your selected crack treatment material is on the Authorized Material List for flexible pavement crack treatment material, submit a certificate of compliance including:

1. Manufacturer's name
2. Production location
3. Brand or trade name
4. Designation
5. Batch or lot number
6. Crack treatment material type
7. Contractor or subcontractor name
8. Contract number
9. Lot size
10. Shipment date
11. Manufacturer's signature

If your selected crack treatment material is not on the Authorized Material List for flexible pavement crack treatment material, submit a sample and test results from each batch or lot 20 days before use. Testing must be performed by an authorized laboratory and test results must show compliance with the specifications. Test reports must include the information specified for the certificate of compliance submittal. Each hot-applied crack treatment material sample must be a minimum of 3 lb and submitted in a silicone release container. Each cold-applied crack treatment material sample must be a minimum of 2 quarts and submitted in a plastic container.

At least 10 days before the start of work, submit sand gradation test results under California Test 202.

Submit the following with each delivery of crack treatment material to the job site:

1. Manufacturer's heating and application instructions
2. Manufacturer's SDS
3. Name of the manufacturer's recommended detackifying agent

37-6.01D Quality Assurance

37-6.01D(1) General

Hot-applied crack treatment material must be sampled at least once per project in the Engineer's presence. Collect two 3-pounds-minimum samples of crack treatment material from the dispensing wand into silicone release boxes.

Cold-applied crack treatment material must be sampled at least once per project in the Engineer's presence. Collect 2 samples of crack treatment material from the dispensing wand into 1-quart containers.

37-6.01D(2) Quality Control

Reserved

37-6.01D(3) Department Acceptance

Crack treatment acceptance is based on:

1. Visual inspection for uniform filling of cracks throughout the work limits including:
   1.2. Crack treatment is not more than a 1/4 inch below the specified level
   1.3. Sealant failures
   1.4. Crack re-opening
   1.5. Crack overbanding is less than 3 inches wide
2. The Department's sampling and testing for compliance with the requirements shown in the following table:

Crack Treatment Acceptance Criteria

Quality characteristic[a]	Test method[b]	Requirement				
		Type 1	Type 2	Type 3	Type 4	Type 5
Softening point (min, °C)	ASTM D36	102	96	90	84	84
Cone penetration at 77 °F (max)	ASTM D5329	35	40	50	70	90
Resilience at 77 °F, unaged (%)	ASTM D5329	20–60	25–65	30–70	35–75	40–80
Flexibility (°C)[c]	ASTM D3111	0	0	0	-11	-28
Tensile adhesion (min, %)	ASTM D5329	300	400	400	500	500
Specific gravity (max)	ASTM D70	1.25	1.25	1.25	1.25	1.25
Asphalt compatibility	ASTM D5329	Pass	Pass	Pass	Pass	Pass
Sieve test (% passing)	See note d	100	100	100	100	100

[a]Cold-applied crack treatment material residue collected under ASTM D6943, Method B and sampled under ASTM D140 must comply with the grade specified.
[b]Except for viscosity, cure each specimen at a temperature of 23 ± 2 °C and a relative humidity of 50 ± 10 percent for 24 ± 2 hours before testing.
[c]For the flexibility test, the specimen size must be 6.4 ± 0.2 mm thick by 25 ± 0.2 mm wide by 150 ± 0.5 mm long. The test mandrel diameter must be 6.4 ± 0.2 mm. The bend arc must be 180 degrees. The bend rate must be 2 ± 1 seconds. At least 4 of 5 test specimens must pass at the specified test temperature without fracture, crazing, or cracking.
[d]For hot-applied crack treatment, dilute with toluene and sieve through a no. 8 sieve. For cold-applied crack treatment, sieve the material as-received through a no. 8 sieve. If the manufacturer provides a statement that added components passed the no. 16 sieve before blending, this requirement is void.

37-6.02 MATERIALS

37-6.02A General

Reserved

37-6.02B Crack Treatment Material

A crack treatment material must comply with the requirements shown in the following table:

Crack Treatment Material

Quality characteristic[a]	Test method[b]	Requirement				
		Type 1	Type 2	Type 3	Type 4	Type 5
Softening point (min, °C)	ASTM D36	102	96	90	84	84
Cone penetration at 77 °F (max)	ASTM D5329	35	40	50	70	90
Resilience at 77 °F, unaged (%)	ASTM D5329	20–60	25–65	30–70	35–75	40–80
Flexibility (°C)[c]	ASTM D3111	0	0	0	-11	-28
Tensile adhesion (min, %)	ASTM D5329	300	400	400	500	500
Specific gravity (max)	ASTM D70	1.25	1.25	1.25	1.25	1.25
Asphalt compatibility	ASTM D5329	Pass	Pass	Pass	Pass	Pass
Sieve test (% passing)	See note d	100	100	100	100	100

[a]Cold-applied crack treatment material residue collected under ASTM D6943, Method B and sampled under ASTM D140 must comply with the grade specifications.
[b]Except for viscosity, cure each specimen at a temperature of 23 ± 2 °C and a relative humidity of 50 ± 10 percent for 24 ± 2 hours before testing.
[c]For the flexibility test, the specimen size must be 6.4 ± 0.2 mm thick by 25 ± 0.2 mm wide by 150 ± 0.5 mm long. The test mandrel diameter must be 6.4 ± 0.2 mm. The bend arc must be 180 degrees. The bend rate must be 2 ± 1 seconds. At least 4 of 5 test specimens must pass at the specified test temperature without fracture, crazing, or cracking.
[d]For hot-applied crack treatment, dilute with toluene and sieve through a no. 8 sieve. For cold-applied crack treatment, sieve the material as-received through a no. 8 sieve. If the manufacturer provides a statement that added components passed the no. 16 sieve before blending, this requirement is void.

A crack treatment material must be delivered to the job site with the information listed below. If crack treatment material is delivered to the job site in containers, each container must be marked with the following information.

1. Manufacturer's name
2. Production location
3. Brand or trade name
4. Designation
5. Crack treatment trade name
6. Batch or lot number
7. Maximum heating temperature
8. Expiration date for cold application only

Hot-applied crack treatment must be delivered to the job site premixed in cardboard containers with meltable inclusion liners or in a fully meltable package.

Cold-applied crack treatment must have a minimum shelf life of 3 months from the date of manufacture.

37-6.02C Sand

Sand applied to tacky crack treatment material must be clean, free of clay, and comply with the gradation shown in the following table:

Sand Gradation

Quality characteristic	Test method	Requirement
Gradation (% passing by weight) Sieve size:	California Test 202	
No. 4		100
No. 50		0–30
No. 200		0–5

37-6.03 CONSTRUCTION

Treat cracks from 1/4 to 1 inch in width for the entire length of the crack. Fill or repair cracks wider than 1 inch as ordered. Filling cracks wider than 1 inch is change order work.

If treating cracks on a traffic lane adjacent to a shoulder, treat the cracks on the shoulder.

For hot-applied crack treatment material, rout cracks or saw cut to form a reservoir.

Cracks must be clean and dry before treating. Before treating, blast cracks with oil-free compressed air at a pressure of at least 90 psi.

If the pavement temperature is below 40 degrees F or if there is evidence of moisture in the crack, use a hot air lance immediately before applying crack treatment. The hot air lance must not apply flame directly on the pavement.

Heat and apply hot-applied crack treatment material under with the manufacturer's instructions.

Apply cold-applied crack treatment material with a distributor kettle, a piston, or a diaphragm barrel pump that can deliver from 50 to 75 psi. The application line must have a pressure gauge and a filter. The pressure in the application line must not exceed 20 psi. The pressure gauge must have a regulator. Use a high-pressure hose with a 1/2-inch NPT swivel connection and a dispensing wand.

Apply crack treatment with a nozzle inserted into the crack. Fill the crack flush. If after 2 days the crack treatment is more than 1/4 inch below the specified level, the sealant fails, or the crack re-opens, re-treat the crack.

Immediately remove crack treatment material that is spilled or deposited on the pavement surface.

Before opening to traffic, apply sand or the manufacturer's recommended detackifying agent to tacky crack treatment material on the traveled way.

Sweep up excess sand before opening to traffic.

37-6.04 PAYMENT

The payment quantity for crack treatment is the length measured in lane miles along the edge of each paved lane parallel to the pavement's centerline. The payment for a lane includes crack treatment of the adjacent shoulder.

37-7–37-10 RESERVED

^^

39 ASPHALT CONCRETE

04-20-18

Replace *SP-2* at each occurrence in section 39 with:

01-15-16

MS-2

Replace the 3rd paragraph of section 39-2.01A(1) with:

07-15-16

WMA technologies must be on the Authorized Material List for WMA authorized technologies.

Add between the 3rd and 4th paragraphs of section 39-2.01A(1):

04-15-16

For HMA that uses asphalt binder containing crumb rubber modifier, submit a Crumb Rubber Usage Report form monthly and at the end of the project.

Replace the table in the 4th paragraph of section 39-2.01A(1) with:

07-21-17

Test method	Year of publication
AASHTO M 17	2011 (2015)
AASHTO M 323	2013
AASHTO R 30	2002 (2015)
AASHTO R 59	2011 (2015)
AASHTO T 27	2014
AASHTO T 49	2014
AASHTO T 59	2013
AASHTO T 96	2002 (2010)
AASHTO T 164	2014
AASHTO T 176	2008
AASHTO T 209	2012
AASHTO T 269	2014
AASHTO T 275	2007 (2012)
AASHTO T 283	2014
AASHTO T 304	2011
AASHTO T 305	2014
AASHTO T 308	2010
AASHTO T 312	2014
AASHTO T 313	2012 (2016)
AASHTO T 315	2012 (2016)
AASHTO T 324	2014
AASHTO T 329	2013
AASHTO T 335	2009
ASTM D36/D36M	$2014^{\varepsilon 1}$
ASTM D92	2012b
ASTM D217	2010
ASTM D297	2013
ASTM D445	2014
ASTM D1856	2009 (Reapproved 2015)
ASTM D2007	2011
ASTM D2074	2007 (Reapproved 2013)
ASTM D2995	1999 (Reapproved 2009)
ASTM D4791	2010
ASTM D5329	2009
ASTM D7741/D7741M	$2011^{\varepsilon 1}$
Asphalt Institute MS-2	7th edition (2015)

Replace items 1 and 2 in the 1st paragraph of section 39-2.01A(3)(b)(i) with:

07-21-17

1. Mix design documentation on a Contractor Hot Mix Asphalt Design Data form dated within 12 months of the submittal for the JMF verification.
2. JMF verification on a Caltrans Hot Mix Asphalt Verification form and the Contractor Hot Mix Asphalt Design Data form that was submitted for the JMF verification, if applicable.

Replace the 2nd paragraph of section 39-2.01A(3)(b)(i) with:

04-20-18

The Contractor Hot Mix Asphalt Design Data form must identify the AASHTO resource accredited lab responsible for the mix design and show documentation on aggregate quality.

Add to item 8 in the 4th paragraph of section 39-2.01A(3)(b)(i):

07-15-16

, except lime supplier and source

Replace the 1st paragraph of section 39-2.01A(3)(c) with:

04-20-18

At least 5 business days prior to the pre-paving meeting, submit a QC plan for HMA.

Replace the headings and paragraphs of section 39-2.01A(3)(i) with:

01-15-16

39-2.01A(3)(i) Reserved

Replace section 39-2.01A(3)(j) with:

04-20-18

39-2.01A(3)(j) Tack Coat

Prior to applying tack coat, submit calculations for the minimum spray rate required to achieve the minimum residual rate.

Replace the 2nd sentence in the 3rd paragraph of section 39-2.01A(4)(b) with:

01-15-16

Submit 3 parts and keep 1 part.

07-21-17

Delete item 3 in the 5th paragraph of section 39-2.01A(4)(b).

Replace the 8th paragraph of section 39-2.01A(4)(b) with:

04-20-18

If the Engineer's test results on plant-produced samples do not show compliance with the specifications, the Engineer notifies you. Submit a JMF adjusted after verification failure based on your testing unless the Engineer authorizes reverification without adjustments. Engineer authorized reverification without adjustment is not JMF adjusted after verification failure. A JMF adjusted after verification failure may include a change in:

1. Asphalt binder content TV up to ±0.20 percent from the OBC value submitted on the Contractor Hot Mix Asphalt Design Data form
2. Aggregate gradation TV within the TV limits specified in the aggregate gradation table

Replace the 10th paragraph of section 39-2.01A(4)(b) with:

04-20-18

For each HMA type and aggregate size specified, the Engineer verifies up to 2 proposed JMF submittals including a JMF adjusted after verification failure. Do not resubmit any of the 2 proposed submittals including a JMF adjusted after verification failure that failed verification on any other Caltrans projects. If you submit more than 2 JMFs for each type of HMA and aggregate size, the Engineer deducts $3,000 from payments for each verification exceeding this limit. This deduction does not apply to verifications initiated by the Engineer or if a JMF expires while HMA production is stopped longer than 30 days.

Replace *AASHTO Materials Reference Laboratory* in the paragraph of section 39-2.01A(4)(f)(i) with:

01-20-17

AASHTO re:source

Add between the 1st and 2nd paragraphs of section 39-2.01A(4)(h)(i):

04-20-18

Condition each at-the-plant sample of HMA mixture for AASHTO 324 and AASHTO 283 in compliance with sections 7.1.2, 7.1.3, and 7.1.4 of AASHTO R 30. Condition each at-the-plant sample of HMA mixture when composite aggregate absorption factor is greater than 2.0 percent as indicated by the JMF in compliance with sections 7.1.2, 7.1.3, and 7.1.4 of AASHTO R 30.

04-20-18

Delete section 39-2.01A(4)(h)(ix)

Replace the 5th paragraph of section 39-2.01A(4)(i)(i) with:

04-20-18

The Engineer conditions each at-the-plant sample of HMA mixture for AASHTO 324 and AASHTO 283 in compliance with sections 7.1.2, 7.1.3, and 7.1.4 of AASHTO R 30. The Engineer conditions each at-the-plant sample of HMA mixture when composite aggregate absorption factor is greater than 2.0 percent as indicated by the JMF in compliance with sections 7.1.2, 7.1.3, and 7.1.4 of AASHTO R 30.

07-21-17

Delete the 6th paragraph of section 39-2.01A(4)(i)(i).

Add between *single* and *test* in the 7th paragraph of section 39-2.01A(4)(i)(i):

07-15-16

aggregate or HMA

Replace *Engineer may accept* in the introductory clause of the 3rd paragraph of section 39-2.01A(4)(i)(ii) with:

07-21-17

Engineer must accept

Replace the table in section 39-2.01A(4)(i)(iii) with:

04-20-18

HMA Pavement Smoothness Acceptance Criteria

HMA thickness	Mean Roughness Index requirement
> 0.25 foot	60 in/mi or less
≤ 0.25 foot	75 in/mi or less

Note: These requirements do not apply to the OGFC surface. Smoothness requirements for OGFC are specified in section 39-2.04A(4)(c)(iii).

Replace *AASHTO Materials Reference Laboratory* in the 2nd paragraph of section 39-2.01A(4)(i)(iv) with:

01-20-17

AASHTO re:source

Replace the 1st paragraph of section 39-2.01B(2)(a) with:

07-21-17

The HMA mix design must comply with the superpave HMA mix design as described in *MS-2 Asphalt Mix Design Methods* by the Asphalt Institute.

Replace the 1st paragraph of section 39-2.01B(2)(b) with:

07-15-16

If the proposed JMF indicates that the aggregate is being treated with dry lime or lime slurry with marination, or the HMA with liquid antistrip, then testing the untreated aggregate under AASHTO T 283 and AASHTO T 324 is not required.

If HMA treatment is required or being used by the Contractor, determine the plasticity index of the aggregate blend under California Test 204.

Add between *aggregate* and *with dry lime* in the 3rd and 4th paragraphs of section 39-2.01B(2)(b):

07-15-16

blend

Replace the 9th through 11th paragraphs of section 39-2.01B(8)(a) with:

07-15-16

HMA must be produced at the temperatures shown in the following table:

HMA Production Temperatures

HMA compaction	Temperature (°F)
HMA	
Density based	≤ 325
Method	305–325
HMA with WMA technology	
Density based	240–325
Method	260–325

Replace section 39-2.01B(11) with:

07-21-17

39-2.01B(11) Miscellaneous Areas and Dikes

For miscellaneous areas and dikes:

1. Choose the aggregate gradation from:
   1.1. 3/8-inch Type A HMA aggregate gradation
   1.2. 1/2-inch Type A HMA aggregate gradation
   1.3. dike mix aggregate gradation
2. Choose asphalt binder Grade PG 64-10, PG 64-16 or PG 70-10.
3. Minimum asphalt binder content must be:
   3.1. 6.40 percent for 3/8-inch Type A HMA aggregate gradation
   3.2. 5.70 percent for 1/2-inch Type A HMA aggregate gradation
   3.3. 6.00 percent for dike mix aggregate gradation

If you request and the Engineer authorizes, you may reduce the minimum asphalt binder content.

Aggregate gradation for dike mix must be within the TV limits for the specified sieve size shown in the following table:

Dike Mix Aggregate Gradation
(Percentage Passing)

Sieve size	Target value limit	Allowable tolerance
1/2"	100	--
3/8"	---	95 - 100
No. 4	73–77	TV ± 10
No. 8	58–63	TV ± 10
No. 30	29–34	TV ± 10
No. 200		0 - 14

For HMA used in miscellaneous areas and dikes, sections 39-2.01A(3), 39-2.01A(4), 39-2.01B(2), 39-2.01B(4)(c), and 39-2.01B(5)–(10) do not apply.

Replace item 4 in the 2nd paragraph of section 39-2.01C(1) with:

07-15-16

4. For method compaction:
   4.1. The temperature of the HMA and the HMA produced with WMA water injection technology in the windrow does not fall below 260 degrees F
   4.2. The temperature of the HMA produced using WMA additive technology in the windrow does not fall below 250 degrees F

Add to the list in the 7th paragraph of section 39-2.01C(1):

07-21-17

4. Marks
5. Tearing
6. Irregular texture

07-15-16

Delete item 3 in the 8th paragraph of section 39-2.01C(1).

Replace the 1st paragraph of section 39-2.01C(2)(c) with:

07-21-17

For method compaction, each paver spreading HMA must be followed by at least one of each of the following 3 types of rollers:

1. Breakdown roller must be a vibratory roller specifically designed to compact HMA. The roller must be capable of at least 2,500 vibrations per minute and must be equipped with amplitude and frequency controls. The roller's gross static weight must be at least 7.5 tons.
2. Intermediate roller must be an oscillating-type pneumatic-tired roller at least 4 feet wide. Pneumatic tires must be of equal size, diameter, type, and ply. The tires must be inflated to 60 psi minimum and maintained so that the air pressure does not vary more than 5 psi.
3. Finishing roller must be a steel-tired, 2-axle tandem roller. The roller's gross static weight must be at least 7.5 tons.

Replace *planning* in the 3rd paragraph of section 39-2.01C(3)(d) with:

07-21-17

planing

Replace *0.20 foot* in item 2 in the list in the 1st paragraph of section 39-2.01C(3)(e) with:

04-20-18

0.25 foot

Replace *39-2.01A(3)(m)(iv)* in the 6th paragraph of section 39-2.01C(3)(e) with:

01-15-16

36-3.01C(3)

Replace *2.06* in the 4th paragraph of section 39-2.01C(3)(f) with:

07-15-16

2.05

Replace section 39-2.01C(3)(g) with:

07-21-17

39-2.01C(3)(g) Geosynthetic Pavement Interlayer

Where shown, place geosynthetic pavement interlayer over a coat of asphalt binder and in compliance with the manufacturer's instructions. Do not place the interlayer on a wet or frozen surface. If the interlayer, in compliance with the manufacturer's instructions, does not require asphalt binder, do not apply asphalt binder before placing the interlayer.

Before placing the interlayer or asphalt binder:

1. Repair cracks 1/4 inch and wider, spalls, and holes in the pavement. This repair is change order work.
2. Clean the pavement of loose and extraneous material.

If the interlayer requires asphalt binder, immediately before placing the interlayer, apply asphalt binder at a rate specified by the interlayer manufacturer; at 0.25±0.03 gal per square yard of interlayer; or at a rate that just saturates the interlayer; whichever is greater. Apply asphalt binder the width of the interlayer plus 3 inches on each side. At an interlayer overlap, apply asphalt binder on the lower interlayer the same overlap distance as the upper interlayer.

If asphalt binder tracked onto the interlayer or brought to the surface by construction equipment causes interlayer displacement, cover it with a small quantity of HMA.

If the interlayer placement does not require asphalt binder, apply tack coat prior to placing HMA at the application rates specified under section 39-2.01C(3)(f) based on the condition of the underlying surface on which the interlayer was placed.

Align and place the interlayer with no overlapping wrinkles, except a wrinkle that overlaps may remain if it is less than 1/2 inch thick. If the overlapping wrinkle is more than 1/2 inch thick, cut the wrinkle out and overlap the interlayer no more than 2 inches.

Overlap the interlayer borders between 2 to 4 inches. In the direction of paving, overlap the following roll with the preceding roll at any break.

You may use rolling equipment to correct distortions or wrinkles in the interlayer.

Before placing HMA on the interlayer, do not expose the interlayer to:

1. Traffic, except for crossings under traffic control and only after you place a small HMA quantity

2. Sharp turns from construction equipment
3. Damaging elements

Pave HMA on the interlayer during the same work shift. The minimum HMA thickness over the interlayer must be 0.12 foot including at conform tapers.

Add to the end of section 39-2.01C(15)(b):

07-15-16

The compacted lift thickness must not exceed 0.25 foot.

Add between *rectangles* and *with* in the 4th paragraph of section 39-2.01C(16):

04-15-16

, half the lane width,

Add between *to* and *the* in item 1 of the 4th paragraph of section 39-2.01C(16):

04-15-16

and along

07-15-16

Delete *coat* in the 5th paragraph of section 39-2.01C(16).

Replace *37* in the 5th paragraph of section 39-2.01C(16) with:

07-15-16

37-4.02

Replace section 39-2.02A(3)(b) with:

01-15-16

The JMF must be based on the superpave HMA mix design as described in *MS-2 Asphalt Mix Design Methods* by the Asphalt Institute.

Replace the 1st paragraph of section 39-2.02C with:

04-20-18

Where the pavement thickness shown is 0.30 foot or greater, you may place Type A HMA in multiple lifts not less than 0.15 foot each. If placing Type A HMA in multiple lifts:

1. Table in Section 39-2.02B(4)(b) does not apply
2. Aggregate gradation must comply with the requirements shown in the following table:

Aggregate Gradation Requirements

Type A HMA lift thickness	Gradation
0.15 to less than 0.20 foot	1/2 inch
0.20 foot to less than 0.25 foot	3/4 inch
0.25 foot or greater	3/4 inch or 1 inch

3. Apply a tack coat before placing a subsequent lift
4. The Engineer evaluates each HMA lift individually for compliance

Add between the 1st and 2nd paragraphs of section 39-2.02C:

07-15-16

If the ambient air temperature is below 60 degrees F, cover the loads in trucks with tarpaulins. If the time for HMA discharge to truck at the HMA plant until transfer to paver's hopper is 90 minutes or greater and if the ambient air temperature is below 70 degrees F, cover the loads in trucks with tarpaulins, unless the time from discharging to the truck until transfer to the paver's hopper or the pavement surface is less than 30 minutes. The tarpaulins must completely cover the exposed load until you transfer the mixture to the paver's hopper or the pavement surface.

Replace the table in the 2nd paragraph of section 39-2.02C with:

07-15-16

Minimum Ambient Air and Surface Temperatures

Lift thickness (feet)	Ambient air (°F)		Surface (°F)	
	Unmodified asphalt binder	Modified asphalt binder	Unmodified asphalt binder	Modified asphalt binder
Type A HMA and Type A HMA produced with WMA water injection technology				
<0.15	55	50	60	55
≥0.15	45	45	50	50
Type A HMA produced with WMA additive technology				
<0.15	45	45	50	45
≥0.15	40	40	40	40

07-15-16

Delete the 3rd paragraph of section 39-2.02C.

Add between *HMA* and *placed* in the 1st sentence of the 4th paragraph of section 39-2.02C:

07-15-16

and Type A HMA produced with WMA water injection technology

Add between the 4th and the 5th paragraphs of section 39-2.02C:

07-15-16

For Type A HMA produced with WMA additive technology placed under method compaction, if the asphalt binder is:

1. Unmodified, complete:
   - 1.1 1st coverage of breakdown compaction before the surface temperature drops below 240 degrees F
   - 1.2. Breakdown and intermediate compaction before the surface temperature drops below 190 degrees F
   - 1.3. Finish compaction before the surface temperature drops below 140 degrees F
   - 1.4 You may continue static rolling below 140 degrees F to remove roller marks.
2. Modified, complete:
   - 2.1. 1st coverage of breakdown compaction before the surface temperature drops below 230 degrees F
   - 2.2. Breakdown and intermediate compaction before the surface temperature drops below 170 degrees F
   - 2.3. Finish compaction before the surface temperature drops below 130 degrees F
   - 2.4. You may continue static rolling below 130 degrees F to remove roller marks.

Replace the 2nd paragraph of section 39-2.03A(3)(b) with:

01-15-16

The JMF must be based on the superpave HMA mix design as described in *MS-2 Asphalt Mix Design Methods* by the Asphalt Institute.

Replace the requirement in the row for *Voids in mineral aggregate on plant produced HMA* in the 2nd table in section 39-2.03A(4)(e)(i) with:

01-15-16

18.0-23.0

Add before the 1st paragraph of section 39-2.03A(4)(e)(ii)(C):

04-15-16

CRM used must be on the Authorized Materials List for Crumb Rubber Modifier.

CRM must be a ground or granulated combination of scrap tire crumb rubber and high natural scrap tire crumb rubber, CRM must be 75.0 ± 2.0 percent scrap tire crumb rubber and 25.0 ± 2.0 percent high natural scrap tire crumb rubber by total weight of CRM. Scrap tire crumb rubber and high natural scrap tire crumb rubber must be derived from waste tires described in Pub Res Code § 42703.

Replace the row for *Hamburg wheel track* in the table in section 39-2.03B(2) with:

01-15-16

Hamburg wheel track (min, number of passes at the inflection point)	AASHTO T 324 (Modified)[d]	
Binder grade:		
PG 58		10,000
PG 64		12,500
PG 70		15,000

Replace *AASHTO R 35* in the 4th paragraph of section 39-2.03B(2) with:

07-21-17

superpave HMA mix design as described in *MS-2 Asphalt Mix Design Methods* by the Asphalt Institute

Replace *RHMA-G* in the 3rd and 5th paragraphs of section 39-2.03C with:

07-15-16

RHMA-G and RHMA-G produced with WMA water injection technology

Add between the 3rd and 4th paragraphs of section 39-2.03C:

01-20-17

Spread and compact RHMA-G produced with WMA addititive technology at an ambient air temperature of at least 50 degrees F and a surface temperature of at least 50 degrees F.

Add between the 5th and 6th paragraphs of section 39-2.03C:

07-15-16

For RHMA-G produced with WMA additive technology placed under method compaction:

1. Complete the 1st coverage of breakdown compaction before the surface temperature drops below 260 degrees F

2. Complete breakdown and intermediate compaction before the surface temperature drops below 230 degrees F
3. Complete finish compaction before the surface temperature drops below 180 degrees F
4. You may continue static rolling below 140 degrees F to remove roller marks

Replace *39-2.03A(4)(b)(ii)* in the 1st sentence of section 39-2.04A(4)(b)(ii) with:

01-20-17

39-2.03A(4)(c)(ii)

Replace the 6th and 7th paragraphs of section 39-2.04C with:

07-15-16

For HMA-O and HMA-O produced with WMA water injection technology:

1. With unmodified asphalt binder:
   1.1. Spread and compact only if the atmospheric temperature is at least 55 degrees F and the surface temperature is at least 60 degrees F.
   1.2. Complete the 1st coverage using 2 rollers before the surface temperature drops below 240 degrees F.
   1.3. Complete all compaction before the surface temperature drops below 200 degrees F.
2. With modified asphalt binder, except asphalt rubber binder:
   2.1. Spread and compact only if the atmospheric temperature is at least 50 degrees F and the surface temperature is at least 50 degrees F.
   2.2. Complete the 1st coverage using 2 rollers before the surface temperature drops below 240 degrees F.
   2.3. Complete all compaction before the surface temperature drops below 180 degrees F.

For HMA-O produced with WMA additive technology:

1. With unmodified asphalt binder:
   1.1. Spread and compact only if the atmospheric temperature is at least 45 degrees F and the surface temperature is at least 50 degrees F.
   1.2. Complete the 1st coverage using 2 rollers before the surface temperature drops below 230 degrees F.
   1.3. Complete all compaction before the surface temperature drops below 190 degrees F.
2. With modified asphalt binder, except asphalt rubber binder:
   2.1. Spread and compact only if the atmospheric temperature is at least 40 degrees F and the surface temperature is at least 40 degrees F.
   2.2. Complete the 1st coverage using 2 rollers before the surface temperature drops below 230 degrees F.
   2.3. Complete all compaction before the surface temperature drops below 170 degrees F.

Replace *RHMA-O and RHMA-O-HB* in the 8th paragraph of section 39-2.04C with:

07-15-16

RHMA-O and RHMA-O produced with WMA water injection technology, and RHMA-O-HB and RHMA-O-HB produced with WMA water injection technology

Add between the 8th and 9th paragraphs of section 39-2.04C:

07-15-16

For RHMA-O produced with WMA additive technology and RHMA-O-HB produced with WMA additives technology:

1. Spread and compact if the ambient air temperature is at least 45 degrees F and the surface temperature is at least 50 degrees F

2. Complete the 1st coverage using 2 rollers before the surface temperature drops below 270 degrees F
3. Complete all compaction before the surface temperature drops below 240 degrees F

Add to the 2nd paragraph of section 39-2.05A(3)(b):

01-15-16

The material transfer vehicle must receive HMA directly from the truck.

Replace *Table 6.1* at each occurrence in the table in section 39-2.05B(2) with:

01-15-16

Table 8.1

Replace *SP-2 Asphalt Mixture* in the 1st footnote in the table in the 2nd paragraph of section 39-2.05B(2)(b) with:

01-15-16

MS-2 Asphalt Mix Design Methods

Replace *Manual Series No. 2 (MS-2)* in the 1st footnote in the table in the 2nd paragraph of section 39-2.05B(2)(b) with:

01-15-16

MS-2 Asphalt Mix Design Methods

Replace *39-3.05* in the 1st paragraph of section 39-3.04A with:

01-15-16

39-3.04

Add to the end of section 39-3.04A:

07-15-16

Schedule cold planing activities such that the pavement is cold planed, the HMA is placed, and the area is opened to traffic during the same work shift.

Add to the 1st paragraph of section 39-3.04C(2):

04-20-18

You may adjust the planed depth up to ± 0.03 foot from the depth shown to achieve uniform pavement profile, cross slope, and surface smoothness. The average cold planed depth must be equal to or greater than the depth shown.

Add between the 3rd and 4th paragraph of section 39-3.04C(2):

04-20-18

If you encounter delaminations during planing operations notify the Engineer immediately. If authorized, adjust the planed depth up to ± 0.05 foot to eliminate delaminations. Authorized work beyond the ± 0.05 foot range or other authorized mitigation work is change order work.

07-15-16

Delete the 2nd sentence of the 1st paragraph in section 39-3.04C(4).

Replace *39-3.06* in the 1st paragraph of section 39-3.05A with:

01-15-16

39-3.05

^^

40 CONCRETE PAVEMENT

07-21-17

Add to the end of section 40-2.02C:

01-20-17

Inorganic zinc primer must comply with AASHTO M 300, Type I or II.

Replace *and wide flange beam terminal* in the 2nd paragraph of section 40-2.02D with:

01-20-17

, Types WF and AN,

Add to the end of section 40-2.02D:

01-20-17

Polyethylene bond breaker for wide flange beam terminal and expansion joint support slabs must comply with section 36-2.

Add to the end of section 40-2.03B:

01-20-17

Lap splice bar reinforcement under section 52-6. For low carbon, chromium-steel bar reinforcement, the length of lap splice must be at least 30 inches.

Replace the paragraph in section 40-2.03D with:

07-21-17

All welding must comply with AWS D1.1. Weld stud ends with an electric arc welder completely fusing the studs to the wide flange beam.

Replace studs dislodged in shipping or that can be dislodged with a hammer.

Add to the end of section 40-2.03D:

01-20-17

Clean surface of wide flange beam to receive prime coat under section 59-2.01C(3)(b)(ii). The thickness of the prime coat must be 6 mils.

Add after the second sentence of the 1st paragraph of section 40-2.03E(3)(a):

01-20-17

For low carbon, chromium-steel bar reinforcement, the length of lap splice must be at least 30 inches.

^^

42 GROOVE AND GRIND CONCRETE

01-20-17

Replace *Reserved* in section 42-1.03 with:

01-20-17

Do not store grooving or grinding residue within the highway.

^^

DIVISION VI STRUCTURES

47 EARTH RETAINING SYSTEMS

07-15-16

Replace the 6th paragraph in section 47-2.02A with:

07-15-16

Rock for rock slope protection at drain pipe outlets must be small-rock slope protection and must comply with the gradation specified for 7-inch-thick layer in section 72-4.02.

^^

48 TEMPORARY STRUCTURES

01-20-17

Add between the 5th and 6th paragraphs of section 48-2.01C(2):

01-20-17

For multi-frame bridges, submit a separate shop drawing for each frame.

Replace section 48-6 with:

01-20-17

48-6 TEMPORARY WOOD POLES

48-6.01 GENERAL

48-6.01A Summary

Section 48-6 includes specifications for constructing, maintaining, and removing temporary wood poles for the support of electrical systems.

Temporary wood poles include attached wire components.

48-6.01B Definitions

Reserved

48-6.01C Submittals

48-6.01C(1) General

Submit a letter of certification that certifies all components of the manufactured assemblies are used in compliance with the manufacturer's recommendations. If requested, (1) submit manufacturer's data for manufactured assemblies to verify manufacturer's recommendations or (2) perform tests demonstrating adequacy of the proposed assemblies and submit the test results.

Submit the letter before installing messenger wires, tether wires, or self-supporting conductors or cables.

You may submit a request to use alternative mounting brackets or wire termination hardware. Your request must include:

1. Structural design calculations and testing data sealed and signed by an engineer who is registered as a civil engineer in the State
2. Manufacturer's instructions

48-6.01C(2) Guy Wire Anchors

Submit the guy wire anchor manufacturer's product information and installation instructions. Do not install anchors unless authorized.

48-6.01D Quality Assurance

48-6.01D(1) General

Reserved

48-6.01D(2) Welding

Welding must comply with AWS D1.1.

48-6.02 MATERIALS

48-6.02A General

Wire used for messenger wires, tether wires, or guy wires must be 7-wire strand complying with ASTM A475, Utilities Grade.

Connection hardware for wires must provide a termination efficiency factor of not less than 0.80.

Wood poles, push braces, and stubs must comply with ANSI O5.1.

Treat wood under AWPA U1, Use Category UC4B, Commodity Specification D.

Except for wire, helical anchors, expanded steel plate anchors, cross plate anchors, and expanding rock anchors, steel components must comply with section 56-3.

48-6.02B Helical Anchors, Expanded Steel Plate Anchors, Cross Plate Anchors, and Expanding Rock Anchors

Fabricate helical anchors, expanded steel plate anchors, and cross plate anchors under section 75.

Fabricate attachable thimble eyes and expanding rock anchors from suitable ferrous material.

Welding must comply with AWS D1.1.

Fabricate as a continuous piece or as separate segments with mechanical connections between segments. Include integral thimble eye or include attachable thimble eye.

Galvanize all helical anchor parts under section 75.

Paint expanded steel plate anchors, cross plate anchors, and expanding rock anchors as specified for repairing damaged galvanized surfaces in section 75-1.02B.

The final assembly must have (1) a minimum ultimate tensile strength greater than the minimum required breaking strength of the guy wire and (2) a minimum ultimate torsional strength greater than twice the minimum installation torque.

48-6.02C Reuse of Materials and Relocation of Temporary Supports

You may reuse structural components and relocate temporary supports provided that the materials remain in acceptable condition for reuse, except do not reuse:

1. Components of high-strength bolt assemblies that have been or are required to be tensioned past snug tight
2. High-strength cap screws that have been or are required to be tensioned past snug tight
3. Tension control bolts

48-6.03 CONSTRUCTION

48-6.03A General

Install construction bracing as necessary to withstand all imposed loads during erection, construction, and removal of any temporary wood poles.

The Engineer may order you to install Type K temporary railing at temporary wood pole locations that are less than 15 feet from the edge of a traffic lane.

Install all temporary railing protecting temporary wood poles before erecting temporary wood poles. Do not remove temporary railing until authorized.

For overhead line construction not specifically covered in the contract documents, comply with Public Utility Commission General Order 95.

48-6.03B Foundations

Verify the design soil parameters before starting construction of temporary wood poles.

Remove any accumulated water from the pole excavation prior to placing granular backfill at the bottom of the pole excavation. Thoroughly compact and level the granular backfill at the bottom of the pole excavation prior to setting the pole.

Backfill around poles with manufactured sand that is free of rocks or other deleterious material. Place the backfill material in 4-inch thick layers. Moisten and thoroughly compact each layer.

Remove accumulated water from the anchor excavation prior to placing an expanded steel anchor. Expand the base of the expanded steel anchor prior to placing backfill. Place backfill around the expanded steel anchor in 4-inch thick layers. Thoroughly compact each layer.

Protect foundations from softening and undermining.

48-6.03C Erection

If temporary wood poles are over or adjacent to roadways or railroads, all construction bracing must (1) be installed at the time each element of the temporary wood pole is erected and (2) remain in place until the temporary wood pole is removed.

Suspend conductors from messenger wire by continuous lashing wire. No spare wire conductors or cables are allowed unless described.

Sag overhead bundles to maintain required clearances over the ambient temperature range of - 30 to 120 degrees F. The sag must be between 4.6 and 5.4 percent of horizontal span unless otherwise shown. Minimum vertical clearance over grade is 25 feet unless otherwise shown.

48-6.03D Attachments

If specific connection details are not shown, mount attachments under the manufacturer's written instructions and such that there is no loss of cross section.

48-6.03E Damping

If at any time during service the temporary structural support exhibits excessive vibration, immediately install dampers. Dampers must be effective in mitigating the vibration and must not compromise the structural supports or the supported hardware.

48-6.03F Removal

Remove temporary structural supports such that portions not yet removed remain stable at all times.

Remove temporary wood poles and helical anchors. Fill the void with excavated material or sand that is free of deleterious material. Place the backfill material in 4-inch thick layers. Moisten and thoroughly compact each layer.

Dispose of surplus excavated material uniformly along the adjacent roadway.

Dispose of temporary structural support materials and work debris.

48-6.03G Guy Wire Helical Anchors

48-6.03G(1) General

Reserved

48-6.03G(2) Installation Parameters

Use the minimum installation torque shown. You may request an alternative minimum installation torque based on a revised value for empirical torque factor.

For alternative minimum installation torque, use the following equation to calculate the installation torque:

$$T = Qa(FS/Kt)$$

where:
T = Minimum installation torque, ft-lb
FS = Factor of safety of 2.0
Qa = Minimum allowable tensile capacity shown, lb
Kt = Empirical torque factor, 1/ft (inverse foot)

Include a geotechnical report sealed and signed by a licensed geotechnical engineer with recommended values for empirical torque factor and alternative minimum installation torque with your request.

Do not start installation unless your alternative installation parameters are authorized.

Verify the installation parameters before the start of anchor installation.

48-6.03G(3) Installation

Install anchors under the manufacturer's written instructions and the following:

1. Do not install anchors underneath utilities or subsurface structures.
2. Maintain horizontal clearances as required by the Engineer.
3. Install to the minimum embedment length.
4. Continuously monitor and record torque during installation. If torque at the minimum embedment length is not equal to or greater than the minimum required, continue installation to greater embedment until the minimum installation torque is achieved for 2 continuous feet.

48-6.03G(4) Removal

After service is complete, remove anchors using reverse torque. Fill the void with excavated material or sand free of deleterious materials. Place the backfill material in 4-inch thick layers. Moisten and thoroughly compact each layer.

48-6.03H Expanded Steel Plate Anchors, Cross Plate Anchors, and Expanding Rock Anchors

48-6.03H(1) General

Reserved.

48-6.03H(2) Installation

Install anchors under the manufacturer’s written instructions.

Locate and mark all substructures and utilities. Do not install anchors underneath subsurface utilities or structures.

48-6.03H(3) Removal

After service is complete, remove anchors to a depth of at least 3 feet below finished grade. Fill the void with sand free of deleterious materials. Place the backfill material in 4-inch thick layers. Moisten and thoroughly compact each layer.

48-6.04 PAYMENT

Not Used

^^

49 PILING

04-20-18

04-15-16

Delete the 2nd paragraph of section 49-1.01A.

Replace the 1st sentence in the 5th paragraph of section 49-1.01D(3) with:

07-15-16

Load test and anchor piles must comply with the specifications for piling as described and Class N steel pipe piling.

Add to the list in 7th paragraph of section 49-1.01D(3):

07-15-16

5. Welds that connect the anchor pile and the anchor pile head must be tested under section 49-2.02A(4)(b)(iii)(C)

Replace the 10th paragraph of section 49-1.01D(3) with:

07-15-16

Furnish labor, materials, tools, equipment, and incidentals as required to assist the Department in the transportation, installation, operation, and removal of Department-furnished steel load test beams, jacks, bearing plates, drills, and other test equipment. This is change order work.

Add to the end of the 5th paragraph of section 49-1.01D(4):

04-20-18

Penetration and bearing analyses are specific to a driving submittal. Piles located within specified control zones are represented by the associated dynamically monitored pile for bearing acceptance criteria.

Replace the 6th paragraph of section 49-1.01D(4) with:

04-20-18

Except for load test piles and anchor piles, drive the 1st production pile in the control zone and perform dynamic monitoring as specified. Do not install any additional production piles until the Engineer provides you with the bearing acceptance criteria curves for any piles represented by the dynamically monitored piles.

Replace the 7th paragraph of section 49-1.01D(4) with:

04-20-18

Piles to be dynamically monitored must:

1. Have an additional length of 2 times the largest cross-sectional dimension of the pile plus 2 feet.
2. Be available to the Department at least 2 business days before driving.
3. Be safely supported at least 6 inches off the ground in a horizontal position on at least 2 support blocks. If ordered, rotate the piles on the blocks.
4. Be positioned to provide safe access to the entire pile length and circumference for the installation of anchorages and control marks for monitoring.

07-15-16

Delete *business* in item 6 in the list in the 8th paragraph of section 49-1.01D(4).

Add to the list in 9th paragraph of section 49-1.01D(4):

07-15-16

3. Cut pile to the specified cut-off elevation after bearing acceptance criteria is provided by the Department

04-15-16

Delete the 3rd paragraph of section 49-1.03.

04-15-16

Delete the 2nd paragraph of section 49-1.04.

01-15-16

Delete the 4th paragraph of section 49-2.01C(5).

Replace item 3 in the list in the 2nd paragraph of section 49-3.01A with:

07-15-16

3. CISS concrete piles

Add between *undisturbed material* and *in a dry* in the 1st paragraph of section 49-3.01C:

07-15-16

, casing, or steel shell

Replace the 2nd and 3rd paragraphs of section 49-3.01C with:

07-15-16

Place and secure reinforcement. Securely block the reinforcement to provide the minimum clearance shown between the reinforcing steel cage and the sides of the drilled hole, casing, or steel shell.

Steel shells, casings, and drilled holes must be clean and free of debris before reinforcement and concrete are placed.

Replace *dewatered* in the 4th paragraphs of section 49-3.01C with:

07-15-16

drilled

Add to section 49-3.02A(1):

07-15-16

Permanent steel casing and driven steel shell must comply with section 49-2.02.

Replace the paragraph of section 49-3.02A(2) with:

07-15-16

dry hole: A drilled hole that requires no work to keep it free of water.

dewatered hole: A drilled hole that:

1. Accumulates no more than 12 inches of water at the bottom during a 1 hour period without any pumping from the hole.
2. Has no more than 3 inches of water at the bottom immediately before placing concrete.
3. Does not require temporary casing to control the groundwater.

Replace item 8 in the list in the 1st paragraph of section 49-3.02A(3)(b) with:

07-15-16

8. Drilling plan and sequence
9. Concrete sequence and placement plan
10. If inspection pipes are required, methods for ensuring the inspection pipes remain straight, undamaged, and properly aligned during concrete placement

Replace section 49-3.02A(3)(c) with:

04-20-18

49-3.02A(3)(c) Inspection Pipe and Reinforcing Cage Coupler Log

If inspection pipes are required, submit a log of the locations of inspection pipe couplers and pile reinforcing cage couplers as an informational submittal within 2 business days of completion of concrete placement in the hole.

Replace *1 business day* in the paragraph of section 49-3.02A(3)(d) with:

07-15-16

2 business days

Add to section 49-3.02A(3)(d):

07-15-16

The log must:

1. Show the pile location, tip elevation, cutoff elevation, dates of excavation and concrete placement, total quantity of concrete placed, length and tip elevation of any casing, and details of any hole stabilization method and materials used.
2. Include an 8-1/2 by 11 inch graph of concrete placed versus depth of hole filled as follows:
   2.1. Plot the graph continuously throughout concrete placement. Plot the depth of drilled hole filled vertically with the pile tip at the bottom and the quantity of concrete placed horizontally.
   2.2. Take readings at each 5 feet of pile depth, and indicate the time of the reading on the graph.

Add after the sentence in the paragraph of section 49-3.02A(3)(e):

07-15-16

Allow 10 days for the review.

Replace the 3rd sentence in the paragraph of section 49-3.02A(3)(f) with:

07-15-16

Allow 10 days for the review and analysis of this report.

Add after *rejected pile* in the 1st sentence in the 1st paragraph of section 49-3.02A(3)(g):

07-15-16

to be mitigated

07-15-16

Delete the 2nd paragraph of section 49-3.02A(3)(g).

Replace item 3 in the list in the 3rd paragraph of section 49-3.02A(3)(g) with:

07-15-16

3. Step by step description of the mitigation work to be performed, including drawings if necessary. If the *ADSC Standard Mitigation Plan* is an acceptable mitigation method, include the most recent version. For the most recent version of the *ADSC Standard Mitigation Plan*, go to:
   http://www.dot.ca.gov/hq/esc/geotech/ft/adscmitplan.htm

Replace the 2nd sentence in the paragraph of section 49-3.02A(3)(i) with:

07-15-16

Allow 10 days for the review.

Add to section 49-3.02A(3):

07-15-16

49-3.02A(3)(j) Certifications

If synthetic slurry is used, submit as an informational submittal the names and certifications of your employees who are trained and certified by the synthetic slurry manufacturer.

04-20-18

49-3.02A(3)(k) Slurry Test Record

If slurry is used, submit a slurry test record as an informational submittal within 2 business days of completion of concrete placement in the hole.

Add after *excavated hole* in the 1st sentence in the 3rd paragraph of section 49-3.02A(4)(c):

07-15-16

lined with plastic

Replace the 1st paragraph of section 49-3.02A(4)(d)(i) with:

07-15-16

Section 49-3.02A(4)(d) applies to CIDH concrete piles except for piles (1) less than 24 inches in diameter or (2) constructed in dry or dewatered holes.

Replace *gamma-gamma logging* in the 2nd paragraph of section 49-3.02A(4)(d)(i) with:

07-15-16

GGL

Replace the 1st sentence in the 3rd paragraph of section 49-3.02A(4)(d)(i) with:

07-15-16

After notification by the Engineer of pile acceptance, fill the inspection pipes and cored holes with grout.

Replace *gamma-gamma logging* in section 49-3.02A(4)(d)(ii) with:

07-15-16

GGL

Replace the 3rd and 4th paragraphs of section 49-3.02A(4)(d)(iii) with:

07-15-16

The Department may perform CSL to determine the extent of the anomalies identified by GGL and to further evaluate a rejected pile for the presence of anomalies not identified by GGL. The pile acceptance test report will indicate if the Department intends to perform CSL and when the testing will be performed. Allow the Department 20 additional days for a total of 50 days to perform CSL and to provide supplemental results.

If authorized, you may perform testing on the rejected pile.

07-15-16

Delete the 8th paragraph of section 49-3.02A(4)(d)(iii).

Add to the end of section 49-3.02A(4)(d)(iii):

07-15-16

If the Engineer determines it is not feasible to repair the rejected pile, submit a mitigation plan for replacement or supplementation of the rejected pile.

Add to section 49-3.02A(4):

07-15-16

49-3.02A(4)(e) Certifications

If synthetic slurry is used, your employees who will be providing technical assistance in the slurry activities must be trained and certified by the synthetic slurry manufacturer to show their competency to perform inspection of slurry operations.

Replace section 49-3.02B(4) with:

07-15-16

49-3.02B(4) Reserved

Replace *near* in the 3rd, 4th, and 5th paragraphs of section 49-3.02B(6)(b) with:

07-15-16

within 2 feet of

Replace *twice per shift* in item 2 in the 3rd paragraph of section 49-3.02B(6)(b) with:

07-15-16

every 4 hours

07-15-16

Delete the 7th and 8th paragraphs of section 49-3.02B(6)(b).

07-15-16

Delete the 3rd paragraph of section 49-3.02B(6)(c).

Replace *near* in item 2 in the 4th paragraph of section 49-3.02B(6)(c) with:

07-15-16

within 2 feet of

Replace item 5 in the 4th paragraph of section 49-3.02B(6)(c) with:

07-15-16

5. After final cleaning and immediately before placing concrete.

Replace section 49-3.02B(9) with:

07-15-16

49-3.02B(9) Inspection Pipes

Inspection pipes must be schedule 40 PVC pipe complying with ASTM D1785 with a nominal pipe size of 2 inches.

Watertight PVC couplers complying with ASTM D2466 are allowed to facilitate pipe lengths in excess of those commercially available.

Add to the beginning of section 49-3.02C(1):

07-15-16

Unless otherwise authorized, drilling the hole and placing reinforcement and concrete in the hole must be performed in a continuous operation.

Replace the 5th paragraph of section 49-3.02C(2) with:

07-15-16

If slurry is used during excavation, maintain the slurry level at a height required to maintain a stable hole, but not less than 10 feet above the piezometric head.

Replace the 1st sentence in the 9th paragraph of section 49-3.02C(2) with:

07-15-16

Remove water that has infiltrated the dewatered hole before placing concrete, as required for dewatered hole.

Replace the 1st sentence in the 10th paragraph of section 49-3.02C(2) with:

07-15-16

If authorized, to control caving or water seepage, you may enlarge portions of the hole, backfill the hole with slurry cement backfill, concrete, or other material, and redrill the hole to the diameter shown.

Replace the 4th paragraph of section 49-3.02C(3) with:

07-15-16

Remove the temporary casing during concrete placement. Maintain the concrete in the casing at a level required to maintain a stable hole, but not less than 5 feet above the bottom of the casing, to prevent displacement of the concrete by material from outside the casing.

Replace the 5th paragraph of section 49-3.02C(4) with:

07-15-16

For a single CIDH concrete pile supporting a column:

1. If the pile and the column share the same reinforcing cage diameter, this cage must be accurately placed as shown
2. If the pile reinforcing cage is larger in diameter than the column cage:
   2.1. Maintain a clear horizontal distance of at least 3.5 inches between the two cages, if the concrete is placed under dry conditions

2.2. Maintain a clear horizontal distance of at least 5 inches between the two cages if the concrete is placed under slurry
2.3. The offset between the centerlines of the two cages must not exceed 6 inches

Replace the paragraphs in section 49-3.02C(5) with:

04-20-18

For acceptance testing, install and test vertical inspection pipes as follows:

1. Log the location of the inspection pipe couplers and pile reinforcing cage couplers with respect to the plane of pile cutoff.
2. Cap each inspection pipe at the bottom. Extend the pipe from 3 feet above the pile cutoff to the bottom of the reinforcing cage. Provide a temporary top cap or similar means to keep the pipes clean before testing. If pile cutoff is below the ground surface or working platform, extend inspection pipes to 3 feet above the ground surface or working platform.
3. If any changes are made to the pile tip, extend the inspection pipes to the bottom of the reinforcing cage.
4. Install inspection pipes in a straight alignment and parallel to the main reinforcement. Securely fasten inspection pipes in place and provide protective measures to prevent misalignment or damage to the inspection pipes during installation of the reinforcement and placement of concrete in the hole. Construct CIDH concrete piles such that the relative distance of inspection pipes to vertical steel reinforcement remains constant.
5. After concrete placement is complete, fill inspection pipes with water to prevent debonding of the pipe.
6. Provide safe access to the tops of the inspection pipes.
7. After placing concrete and before requesting acceptance testing, test each inspection pipe in the Engineer's presence by passing a rigid cylinder through the length of pipe. The rigid cylinder must:
   7.1 Be 1-1/4-inch diameter by 4.5-foot long
   7.2 Weigh 12 pounds or less
   7.3 Be able to freely pass down through the entire length of the pipe under its own weight and without the application of force
8. When performing acceptance testing, inspection pipes must provide a 2-inch-diameter clear opening and be completely clean, unobstructed, and either dry or filled with water as authorized.
9. After acceptance testing is complete, completely fill the inspection pipes with water.

07-15-16

If the rigid cylinder fails to pass through the inspection pipe:

1. Completely fill the inspection pipes in the pile with water immediately.
2. Core a nominal 2-inch-diameter hole through the concrete for the entire length of the pile for each inspection pipe that does not pass the rigid cylinder. Coring must not damage the pile reinforcement.
3. Locate cored holes as close as possible to the inspection pipes they are replacing and no more than 5 inches clear from the reinforcement.

Core holes using a double wall core barrel system with a split tube type inner barrel. Coring with a solid type inner barrel is not allowed.

Coring methods and equipment must provide intact cores for the entire length of the pile.

Photograph and store concrete cores as specified for rock cores in section 49-1.01D(5).

The coring operation must be logged by an engineering geologist or civil engineer licensed in the State and experienced in core logging. Coring logs must comply with the Department's *Soil and Rock Logging, Classification, and Presentation Manual* for rock cores. Coring logs must include core recovery, rock quality designation of the concrete, locations of breaks, and complete descriptions of inclusions and voids encountered during coring.

The Department evaluates the portion of the pile represented by the cored hole based on the submitted coring logs and concrete cores. If the Department determines a pile is anomalous based on the coring logs and concrete cores, the pile is rejected.

Replace item 2 in the list in the 2nd paragraph of section 49-3.02C(7) with:

07-15-16

2. Extend at least 5 feet below the construction joint. If placing casing into rock or a dry hole, the casing must extend at least 2 feet below the construction joint.

Add to the beginning of section 49-3.02C(9):

07-15-16

49-3.02C(9)(a) General

Replace the 2nd sentence of the 3rd paragraph of section 49-3.02C(9) with:

04-15-16

Do not vibrate the concrete.

Add after *concrete pump* in the 8th paragraph of section 49-3.02C(9):

07-15-16

and slurry pump

Replace item 3 in the list in the 11th paragraph of section 49-3.02C(9) with:

07-15-16

3. Maintain the slurry level at a height required to maintain a stable hole, but not less than 10 feet above the piezometric head.

Replace the 13th paragraph of section 49-3.02C(9) with:

07-15-16

Maintain a log of concrete placement for each drilled hole.

Replace 14th and 15th paragraphs of section 49-3.02C(9) with:

07-15-16

If a temporary casing is used, maintain concrete placed under slurry at a level required to maintain a stable hole, but not less than 5 feet above the bottom of the casing. The withdrawal of the casing must not cause contamination of the concrete with slurry.

The equivalent hydrostatic pressure inside the casing must be greater than the hydrostatic pressure on the outside of the casing to prevent intrusion of water, slurry, or soil into the column of freshly placed concrete.

Remove scum, laitance, and slurry-contaminated concrete from the top of the pile.

Add to section 49-3.02C(9):

07-15-16

49-3.02C(9)(b) Mineral Slurry

Remove any caked slurry on the sides or bottom of hole before placing reinforcement.

If concrete is not placed immediately after placing reinforcement, the reinforcement must be removed and cleaned of slurry, the sides of the drilled hole must be cleaned of caked slurry, and the reinforcement again placed in the hole for concrete placement.

49-3.02C(9)(c) Synthetic Slurry

A manufacturer's representative must:

1. Provide technical assistance for the use of their material
2. Be at the job site before introduction of the synthetic slurry into the drilled hole
3. Remain at the job site until released by the Engineer

After the manufacturer's representative has been released by the Engineer, your employee certified by the manufacturer must be present during the construction of the pile under slurry.

Replace the heading of section 49-3.03 with:

07-15-16

CAST-IN-STEEL SHELL CONCRETE PILING

Replace the 1st paragraph of section 49-3.03A(1) with:

07-15-16

Section 49-3.03 includes specifications for constructing CISS concrete piles consisting of driven open-ended or closed-ended steel shells filled with reinforcement and concrete.

Add to the end of section 49-3.03A(1):

07-15-16

CISS concrete piles include Class 90 Alternative V and Class 140 Alternative V piles.

Add to section 49-3.03A(3):

01-15-16

Submit a Pile and Driving Data Form under section 49-2.01A(3)(a) if specified in the special provisions.

Replace the paragraph of section 49-3.03D with:

07-15-16

Furnish piling is measured along the longest side of the pile from the specified tip elevation shown to the plane of pile cutoff.

Replace section 49-4.03 with:

01-15-16

49-4.03 CONSTRUCTION

49-4.03A General

Reserved

49-4.03B Drilled Holes

Drill holes for steel soldier piles into natural foundation material. Drilled holes must be accurately located, straight, and true.

Furnish and place temporary casings or tremie seals where necessary to control water or to prevent caving of the hole.

Before placing the steel soldier pile, remove loose materials existing at the bottom of the hole after drilling operations have been completed.

Do not allow surface water to enter the hole. Remove all water in the hole before placing concrete.

If temporary casings are used, they must comply with section 49-3.02C(3).

49-4.03C Steel Soldier Piles

Plumb and align the pile before placing concrete backfill and lean concrete backfill. The pile must be at least 2 inches clear of the sides of the hole for the full length of the hole to be filled with concrete backfill and lean concrete backfill. Ream or enlarge holes that do not provide the clearance around steel piles.

Maintain alignment of the pile in the hole while placing backfill material.

Clean and prepare piles in anticipated heat affected areas before splicing steel piles or welding concrete anchors.

^^

50 PRESTRESSING CONCRETE

04-20-18

Add to the end of section 50-1.01C:

07-15-16

50-1.01C(8) Post-tensioning Jack Calibration Chart

Submit the post-tensioning jack calibration plot.

50-1.01C(9) Pretensioning Jack Calibration Chart

For any pretensioning jack calibrated by an authorized laboratory, submit a certified calibration plot.

Replace section 50-1.01D(2)(b) with:

07-15-16

50-1.01D(2)(b) Equipment and Calibration

50-1.01D(2)(b)(i) General

Each jack body must be permanently marked with the ram area.

Each pressure gauge must be fully functional and have an accurately reading, clearly visible dial or display. The dial must be at least 6 inches in diameter and graduated in 100 psi increments or less.

Each load cell must be calibrated and have an indicator that can be used to determine the force in the prestressing steel.

The range of each load cell must be such that the lower 10 percent of the manufacturer's rated capacity is not used in determining the jacking force.

Each jack must be calibrated equipped with its gauges.

Mechanically calibrate the gauges with a dead weight tester or other authorized means before calibration of the jacking equipment.

50-1.01D(2)(b)(ii) Post-tensioning

Equip each hydraulic jack used to tension prestressing steel with 2 pressure gauges or 1 pressure gauge and a load cell. Only 1 pressure gauge must be connected to the jack during stressing.

Each jack used to tension prestressing steel permanently anchored at 25 percent or more of its specified minimum ultimate tensile strength must be calibrated by METS within 1 year of use and after each repair. You must:

1. Schedule the calibration of the jacking equipment with METS.
2. Verify that the jack and supporting systems are complete, with proper components, and are in good operating condition.
3. Provide labor, equipment, and material to (1) install and support the jacking and calibration equipment and (2) remove the equipment after the calibration is complete.
4. Plot the calibration results.

Each jack used to tension prestressing steel permanently anchored at less than 25 percent of its specified minimum ultimate tensile strength must be calibrated by an authorized laboratory within 180 days of use and after each repair.

50-1.01D(2)(b)(iii) Pretensioning

04-20-18

Each jack used to pretension prestressing steel must be calibrated, equipped with its gauges, by a laboratory on the Authorized Laboratories List to perform pretensioning calibrations within 1 year of use and after each repair.

07-15-16

Calibrate pretensioning jacks:

1. Under ASTM E4 using an authorized laboratory. Certification that the calibration is performed to ASTM accuracy is not required.
2. In the presence of the Engineer. Notify the Engineer at least 2 business days before calibrating the jack.
3. Using 3 test cycles. Average the forces from each test cycle at each increment.
4. To cover the load range used in the work.

Gauges for pretensioning jacks may:

1. Be electronic pressure indicators that display either:
   1.1. Pressure in 100 psi increments or less
   1.2. Load to 1 percent of the maximum sensor/indicator capacity or 2 percent of the maximum load applied, whichever is smaller
2. Have a dial less than 6 inches in diameter

Gauges displaying pressure must have been calibrated within 1 year of the jack calibration.

Each hydraulic jack used for pretensioning must be equipped with either 2 gauges or 1 gauge and a load cell or you must have a calibrated standby jack with its gauge present on site during stressing.

^^

51 CONCRETE STRUCTURES

07-21-17

Replace the 7th item in the list in the 2nd paragraph of section 51-1.01A with:

01-20-17

7. Pipe culvert headwalls, endwalls, and wingwalls

Add to the list in the 2nd paragraph of section 51-1.01A:

04-15-16

8. Pile extensions

07-15-16

9. Drainage inlets

Add to the list in the 6th paragraph of section 51-1.01A:

07-15-16

7. Drainage inlets

01-20-17

8. Pipe culvert headwalls and endwalls for a pipe with a diameter of less than 5 feet

Add to section 51-1.01B:

07-21-17

age of break: Age in hours, determined by your testing, at which RSC attains its minimum specified compressive strength.

01-20-17

Delete the 1st paragraph of section 51-1.01C(5).

01-20-17

Delete the 5th item in the list in the 4th paragraph of section 51-1.01C(5).

Replace section 51-1.01D(2)(b) with:

07-21-17

51-1.01D(2)(b) Rapid Strength Concrete

51-1.01D(2)(b)(i) General

Reserved

51-1.01D(2)(b)(ii) Prequalification of Mix Design

Prequalify RSC under section 90-1.01D(5)(b) before use. Prequalification of an RSC mix design includes determining the opening age and attaining the specified minimum 28-day compressive strength.

Determine the opening age of the RSC mix design as follows:

1. Fabricate at least 5 test cylinders to be used to determine the age of break.
2. Immediately after fabrication of the 5 test cylinders, store the cylinders in a temperature medium of 70 ± 3 degrees F until the cylinders are tested.
3. Determine the age of break to attain an average strength of the 5 test cylinders.
4. Opening age is the age of break plus 1 hour.

The average strength of the 5 test cylinders must be at least the minimum specified compressive strength. Not more than 2 test cylinders may have a strength of less than 95 percent of the minimum specified compressive strength.

If compressive strength tests performed in the field show that the RSC has attained the minimum specified compressive strength, you may open the lane to traffic at the age of break. Perform the compressive strength tests under the specifications for sampling and testing cylinders in section 90-1.01D(5)(a). If you choose to use this option, notify the Engineer before starting construction.

51-1.01D(2)(b)(iii) Mock-ups

Reserved

Replace the 1st sentence in the 3rd paragraph of section 51-1.01D(3)(b)(iii) with:

01-20-17

If portions of completed deck surfaces or approach slabs have a coefficient of friction of less than 0.35, those portions must be ground or grooved parallel to the center line to produce a coefficient of friction of not less than 0.35.

Add to section 51-1.02I:

07-15-16

Metal frames, covers, grates, and other miscellaneous iron and steel used with drainage inlets must comply with section 75-2.

Add to section 51-1.03B:

07-15-16

You may use PC drainage inlets as an alternative to CIP drainage inlets.

Add between the 10th and 11th paragraphs of section 51-1.03C(2)(a):

07-15-16

For drainage inlets, extend the outside forms at least 12 inches below the top of the inlet. You may place concrete against excavated earth below this depth except:

1. You must use full-depth outside forms or other protection when work activities or unstable earth may cause hazardous conditions or contamination of the concrete.
2. You must increase the wall thickness 2 inches if placing concrete against the excavated surface. The interior dimensions must be as shown.

Add to section 51-1.03C(2)(b):

07-15-16

For drainage inlets, remove exterior forms to at least 12 inches below the final ground surface. Exterior forms below this depth may remain if their total thickness is not more than 1 inch.

Add to the end of section 51-1.03D(1):

07-21-17

If using a mobile volumetric mixer, before each work shift and after each time the mixer is washed out, discharge at least 2 cubic feet of RSC into a concrete waste container before placing RSC into the work.

Replace the 1st paragraph of section 51-1.03E(5) with:

01-20-17

For drill and bond dowel (chemical adhesive), install dowels under the chemical adhesive manufacturer's instructions.

Add to the list in the 2nd paragraph of section 51-1.03F(2):

07-15-16

4. Interior and top surfaces of drainage inlets

Replace the paragraphs of section 51-1.03F(5)(b)(i) with:

01-20-17

Except for bridge widenings and bridge decks to be covered with an overlay, texture roadway surfaces of bridge decks, approach slabs, and sleeper slabs, and other roadway surfaces of concrete structures longitudinally by grinding and grooving or by longitudinal tining.

For bridge widenings, texture the roadway surfaces longitudinally by longitudinal tining.

For bridge decks that are to be covered with an overlay, texture the deck using a burlap drag or broom device that produces striations either parallel or transverse to the centerline. If these structures are opened to traffic before the overlay is placed, the deck surface must meet the coefficient of friction requirement in section 51-1.01D(3)(b)(iii).

Replace the 3rd paragraph of section 51-1.03F(5)(b)(ii) with:

01-20-17

Grind and groove the deck surface to within 18 inches of the toe of the barrier as follows:

1. Grind the surface under section 42-3. Grinding must not reduce the concrete cover on reinforcing steel to less than 1-3/4 inches.
2. Groove the ground surfaces longitudinally under section 42-2. The grooves must be parallel to the centerline.

Replace the 2nd sentence of the 3rd paragraph in section 51-1.03F(5)(b)(iii) with:

01-20-17

Grooves must be from 1/8 to 3/16 inch deep after concrete has hardened.

Replace the 8th paragraph of section 51-1.03H with:

07-21-17

Section 90-3.03 does not apply to curing RSC for bridge decks. Cure bridge decks constructed with RSC as follows:

1. Immediately after strike-off, continually mist the deck with water using atomizing nozzles. Continue misting until the concrete reaches a compressive strength of at least 2000 psi.
2. After misting, apply curing compound no. 1 to the deck under section 90-1.03B(3).

Repair any damage to the film of the curing compound with additional curing compound. Repairing damaged curing compound after the deck is opened to traffic is not required.

Add to section 51-1.04:

07-15-16

The payment quantity for structural concrete, drainage inlet is the volume determined from the dimensions shown for CIP drainage inlets.

Replace the 2nd paragraph of section 51-2.02D(2)(a) with:

07-21-17

Bolts, nuts, and washers must comply with ASTM F3125, Grade A325.

Add to section 51-4.01C(1):

07-15-16

For PC drainage inlets, submit field repair procedures and a patching material test sample before repairs are made. Allow 10 days for the Engineer’s review.

Add to section 51-4.01C(2)(a):

07-15-16

For drainage inlets with oval or circular cross sections, submit shop drawings with calculations. Shop drawings and calculations must be sealed and signed by an engineer who is registered as a civil engineer in the State. Allow 15 days for the Engineer's review.

Add to section 51-4.01D(3):

07-15-16

The Engineer may reject PC drainage inlets exhibiting any of the following:

1. Cracks more than 1/32 inch wide
2. Nonrepairable honeycombed or spalled areas of more than 6 square inches
3. Noncompliance with reinforcement tolerances or cross sectional area shown
4. Wall, inlet floor, or lid less than minimum thickness
5. Internal dimensions less than dimensions shown by 1 percent or 1/2 inch, whichever is greater
6. Defects affecting performance or structural integrity

Add to section 51-4.02C:

07-15-16

Materials for PC drainage inlets must comply with the following:

1. Preformed flexible joint sealant must be butyl-rubber complying with ASTM C990
2. Resilient connectors must comply with ASTM C923
3. Sand bedding must comply with section 19-3.02F(2)
4. Bonding agents must comply with ASTM C1059/C1059, Type II

Add to section 51-4.02D:

07-15-16

51-4.02D(8) Drainage Inlets

PC units for drainage inlets must be rectangular, round, or oval in cross section, or any combination. Transitions from a rectangular grate opening to a round or oval basin must be made in not less than 8 inches. Provide means for field adjustment to meet final grade, paving, or surfacing.

If oval or circular shape cross-sections are furnished, they must comply with *AASHTO LRFD Bridge Design Specifications, Sixth Edition with California Amendments*.

Wall and slab thicknesses may be less than the dimensions shown by at most 5 percent or 3/16 inch, whichever is greater.

Reinforcement placement must not vary more than 1/2 inch from the positions shown.

Add to section 51-4.03:

07-15-16

51-4.03H Drainage Inlets

Repair PC drainage inlet sections to correct damage from handling or manufacturing imperfections before installation.

Center pipes in openings to provide a uniform gap. Seal gaps between the pipe and the inlet opening with nonshrink grout under the grout manufacturer's instructions. For systems designated as watertight, seal these gaps with resilient connectors.

Match fit keyed joints to ensure uniform alignment of walls and lids. Keys are not required at the inlet floor level if the floor is precast integrally with the inlet wall. Seal keyed joint locations with preformed butyl rubber joint sealant. You may seal the upper lid and wall joint with nonshrink grout.

Clean keyed joint surfaces before installing sealant. Joint surfaces must be free of imperfections that may affect the joint. Use a primer if surface moisture is present. Use a sealant size recommended by the sealant manufacturer. Set joints using sealant to create a uniform bearing surface.

Flat drainage inlet floors must have a field-cast topping layer at least 2 inches thick with a slope of 4:1 (horizontal:vertical) toward the outlet. Use a bonding agent when placing the topping layer. Apply the bonding agent under the manufacturer's instructions.

Add to section 51-5.03D(1):

01-20-17

Approach slab (aggregate base) includes using AB to fill voids that remain after removing subsealing material or CTB beneath existing approach slabs.

Add to section 51-5.03E:

07-21-17

If using magnesium phosphate concrete, modified high-alumina-based concrete, or portland-cement-based concrete complying with section 51-1.02C to construct the paving notch extension, allow 1 hour between placing the paving notch extension concrete and placing the approach slab concrete.

If using RSC to construct the paving notch extension, the RSC must have a minimum compressive strength of 1,200 psi before placing the approach slab concrete and a minimum compressive strength of 2,500 psi before opening the overlaying approach slab to traffic.

Add to section 51-5.04:

01-20-17

Structural concrete used to fill voids below the approach slab that are caused by removal of subsealing material or CTB is paid for as aggregate base (approach slab). The payment quantity does not include the volume of structure concrete used to fill an overexcavation.

Replace the 2nd paragraph of section 51-7.01A with:

07-15-16

Minor structures include structures described as minor structures.

07-15-16

Delete the 4th paragraph of section 51-7.01B.

07-15-16

Delete the 1st and 3rd paragraphs of section 51-7.01C.

07-15-16

Delete the heading and paragraph of section 51-7.02.

^^

52 REINFORCEMENT

04-20-18

Add to section 52-1.02:

01-20-17

52-1.02E Dowels

Reinforcing steel dowels must be deformed bars complying with section 52-1.02B.

Threaded rods used as dowels must comply with section 75-1.02A.

Replace item 1 in the list in the 2nd paragraph of section 52-5.01D(4)(b) with:

04-20-18

1. At a laboratory on the Authorized Laboratories List for testing reinforcing steel splices

Replace *Reserved* in section 52-6.01B with:

07-21-17

group: Set of 5 or fewer consecutive lots after the 1st lot.

Replace *Reseved* in section 52-6.01C(2)(a) with:

07-21-17

Reserved

Replace *Reseved* in section 52-6.01C(3)(a) with:

07-21-17

Reserved

Replace the 2nd paragraph of section 52-6.01C(4)(b) with:

07-21-17

Each QC test report must include:

1. Group number, lot number, and location
2. Bar size
3. Splice type
4. Mechanical splice length
5. Location of fracture
6. Physical condition of splice test sample
7. Notable defects
8. Total measured slip
9. Ultimate tensile strength of each splice
10. The following for ultimate butt splices:
    - 10.1. Location of visible necking area
    - 10.2. Largest measured strain

Replace the paragraph in section 52-6.01C(6)(c) with:

07-21-17

For each bar size of each coupler model type of service splice or ultimate butt splice to be used in the work, submit a splice prequalification report that includes:

1. Copy of the manufacturer's product literature giving complete data on the splice material and installation procedures
2. Names of the operators who will be performing the splicing
3. Descriptions of the positions, locations, equipment, and procedures that will be used in the work
4 Certified test results from the authorized laboratory for the prequalification splice test samples
5. Certifications from the fabricator for operator and procedure prequalification
6. Manufacturer's QC Process Manual

Add between the 2nd and 3rd paragraphs of section 52-6.01D(1):

07-21-17

Before starting service or ultimate butt splicing activities, select the lots that constitute each group for QA testing.

Replace the last paragraph of section 52-6.01D(1) with:

07-21-17

Section 11-2 does not apply to resistance-butt-welded splices.

Replace the 2nd paragraph of section 52-6.01D(2)(b) with:

07-21-17

For each bar size of each splice coupler model type to be used, each operator must prepare 4 prequalification splice test samples.

Replace the last paragraph of section 52-6.01D(2)(b) with:

07-21-17

Splice test samples and testing must comply with the QC testing requirements specified in section 52-6.01D(4)(b) for the type of splice to be used in the work.

Replace the 1st paragraph of section 52-6.01D(3)(a) with:

07-21-17

Prepare splice test samples under California Test 670.

Replace the 4th paragraph of section 52-6.01D(3)(a) with:

07-21-17

When preparing or removing splice test samples for QC testing, concurrently prepare or remove 4 Department acceptance splice test samples from the same lot during:

1. 1st QC test
2. 1 QC test from each group, randomly selected by the Engineer

Add to section 52-6.01D(3)(a):

07-21-17

If splices from a lot will be encased in concrete prior to receiving passing Department acceptance test results, you must prepare additional samples selected by the Engineer from the same lot for additional Department acceptance testing. You may prepare the samples as specified for service splice test samples in section 52-6.01D(4)(b)(iii). The Department will test service splice test samples as specified for service splices and ultimate butt splice test samples as specified for ultimate butt splices.

Replace item 3 in the list in the 2nd paragraph of section 52-6.01D(4)(b)(i) with:

04-20-18

3. At a laboratory on the Authorized Laboratories List for testing reinforcing steel splices

Add to the list in the 5th paragraph of section 52-6.01D(4)(b)(i):

07-21-17

4. Group number of each lot

Add between the 1st and 2nd paragraphs of section 52-6.01D(5):

07-21-17

If a Department acceptance test result does not comply with the material and QA requirements, the Department rejects all splices in the lot and the group.

For the other lots in the rejected group that pass QC testing, you may request the Engineer to perform additional Department acceptance testing for additional splice samples. If a Department acceptance splice test result complies with the material and QA requirements, the Department accepts all splices in that lot.

If a lot of splices is rejected, prepare a splice rejection mitigation report for that rejected lot as specified in section 52-6.01D(4)(b)(i).

If the QC and the Department acceptance test results have different compliance determinations, the Department will sample and test all subsequent lots until QC and the Department acceptance test compliance determinations are consistent for 2 consecutive lots before resuming sampling and testing of 1 lot from every group.

Replace the paragraph in section 52-6.02B(3) with:

07-21-17

Ultimate butt splice test samples must demonstrate necking as either of the following:

1. Except for 30-inch and smaller diameter hoops, for *Necking Option I* as specified in California Test 670, the test sample must fracture in the reinforcing bar outside of the affected zone and show visible necking. For 30-inch and smaller diameter hoops, the test sample must show visible necking at fracture at any location.
2. For *Necking Option II* as specified in California Test 670, the largest measured strain must be at least:
   - 2.1. 6 percent for no. 11 and larger bars
   - 2.2. 9 percent for no. 10 and smaller bars

Replace the 3rd paragraph of section 52-6.03B with:

01-15-16

For uncoated and galvanized reinforcing bars complying with ASTM A615/A615M, Grade 60, ASTM A706/A706M, or ASTM A767/A767M, Class 1, the length of lap splices must be at least:

1. 45 diameters of the smaller bar spliced for reinforcing bars no. 8 or smaller
2. 60 diameters of the smaller bar spliced for reinforcing bars nos. 9, 10, and 11

For epoxy-coated reinforcing bars and alternatives to epoxy-coated reinforcing bars complying with ASTM A775/A775M, ASTM A934/A934M, ASTM A1035/A1035M, or ASTM A1055/A1055M, the length of lap splices must be at least:

1. 65 diameters of the smaller bar spliced for reinforcing bars no. 8 or smaller
2. 85 diameters of the smaller bar spliced for reinforcing bars nos. 9, 10, and 11

^^

53 SHOTCRETE

01-15-16

Replace *632* in item 1 in the list in the 3rd paragraph of section 53-1.02 with:

01-15-16

675

Replace item 2 in the list in the 3rd paragraph of section 53-1.02 with:

01-15-16

2. You may substitute a maximum of 30 percent coarse aggregate for the fine aggregate. Coarse aggregate must comply with section 90-1, except section 90-1.02C(4)(d) does not apply. The gradation for the coarse aggregate must comply with the gradation specified in section 90-1.02C(4)(b) for the 1/2 inch x No. 4 or the 3/8 inch x No. 8 primary aggregate nominal size.

Replace *shotcrete* in the 2nd sentence of the 4th paragraph of section 53-1.02 with:

01-15-16

concrete

^^

55 STEEL STRUCTURES

04-20-18

Replace *Welder* in the 1st paragraph of section 55-1.01D(3)(a) with:

07-21-17

Welding

Replace the heading of the table in the 5th item in the 2nd paragraph of section 55-1.01D(3)(b)(iii)(2) with:

07-21-17

Table 1: Grade A325 Snug-Tight Tension Values

Replace the table in the 7th item in the 2nd paragraph of section 55-1.01D(3)(b)(iii)(2) with:

07-21-17

Table 3: Grade A325 Minimum Tension Values

Bolt diameter (inches)	Minimum tension (kips)
1/2	12
5/8	19
3/4	28
7/8	39
1	51
1-1/8	64
1-1/4	81
1-3/8	97
1-1/2	118

Replace the table in the 5th item in the 3rd paragraph of section 55-1.01D(3)(b)(iii)(2) with:

07-21-17

Table 4: Grade A325 Turn Test Tension Values

Bolt diameter (inches)	Turn test tension (kips)
1/2	14
5/8	22
3/4	32
7/8	45
1	59
1-1/8	74
1-1/4	94
1-3/8	112
1-1/2	136

Replace the table in the 4th item in the 2nd paragraph of section 55-1.01D(3)(b)(iii)(3) with:

07-21-17

Table 5 Grade A325 Maximum Allowable Torque

Bolt diameter (inches)	Torque (ft-lb)
1/2	150
5/8	290
3/4	500
7/8	820
1	1230
1-1/8	1730
1-1/4	2450
1-3/8	3210
1-1/2	4250

Replace *ASTM A325, Type 1* in the 2nd table of section 55-1.02D(1) with:

07-21-17

ASTM F3125, Grade A325, Type 1

Replace *ASTM F1852, Type 1* in the 2nd table of section 55-1.02D(1) with*:*

07-21-17

ASTM F3125, Grade F1852, Type 1

Replace *Certification* in the 5th paragraph of section 55-5.01C(1) with:

04-20-18

Test Reports

^^

56 OVERHEAD SIGN STRUCTURES, STANDARDS, AND POLES

04-20-18

Replace section 56-1.01 with:

07-15-16

56-1.01 GENERAL

56-1.01A Summary

Section 56-1 includes general specifications for constructing overhead sign structures, standards, and poles.

56-1.01B Definitions

Reserved

56-1.01C Submittals

Reserved

56-1.01D Quality Assurance

56-1.01D(1) General

Reserved

56-1.01D(2) Quality Control

56-1.01D(2)(a) General

Reserved

56-1.01D(2)(b) Nondestructive Testing

56-1.01D(2)(b)(i) General

Perform NDT of steel members under AWS D1.1 and the requirements shown in the following table:

Nondestructive Testing for Steel Standards and Poles

Weld location	Weld type	Minimum required NDT
Circumferential splices around the perimeter of tubular sections, poles, and arms	CJP groove weld with backing ring	100% UT or RT
Longitudinal seam	CJP or PJP groove weld	Random 25% MT
Longitudinal seam within 6 inches of a circumferential splice	CJP groove weld	100% UT or RT
Welds attaching base plates, flange plates, pole plates, or mast arm plates to poles or arm tubes	CJP groove weld with backing ring and reinforcing fillet	t≥ 5/16 inch: 100% UT and 100% MT t< 5/16 inch: 100% MT after root weld pass and final weld pass
	External (top) fillet weld for socket-type connections	100% MT
Hand holes and other appurtenances	Fillet and PJP welds	MT full length on random 25% of all standards and poles

NOTE: t = pole or arm thickness

Nondestructive Testing for Overhead Sign Structures

Weld location	Weld type	Minimum required NDT
Base plate to post	CJP groove weld with backing ring and reinforcing fillet	100% UT and 100% MT
Base plate to gusset plate	CJP groove weld	100% UT
Circumferential splices of pipe or tubular sections	CJP groove weld with backing ring	100% UT or RT
Split post filler plate welds	CJP groove weld with backing bar	100% UT or RT
Longitudinal seam weld for pipe posts	CJP groove weld	t < 1/4 inch: 100% MT t ≥ 1/4 inch: 100% UT or RT
	PJP groove weld	Random 25% RT
Chord angle splice weld	CJP groove weld with backing bar	100% UT or RT
Truss vertical, diagonal, and wind angles to chord angles	Fillet weld	Random 25% MT
Upper junction plate to chord (cantilever type truss)	Fillet weld	Random 25% MT
Bolted field splice plates (tubular frame type)	CJP groove weld	100% UT and 100% MT
Cross beam connection plates (lightweight extinguishable message sign)	Fillet weld	Random 25% MT
Arm connection angles (lightweight extinguishable message sign)	Fillet weld	100% MT
Mast arm to arm plate (lightweight extinguishable message sign)	CJP groove weld with backing ring	t ≥ 5/16 inch: 100% UT and 100% MT t < 5/16 inch: 100% MT after root weld pass and final weld pass
Post angle to post (lightweight extinguishable message sign)	Fillet weld	100% MT
Hand holes and other appurtenances	Fillet and PJP welds	MT full length on random 25% of all sign structures

NOTE: t = pole or arm thickness

56-1.01D(2)(b)(ii) Ultrasonic Testing

04-20-18

For UT of welded joints with any members less than 5/16 inch thick or tubular sections less than 13 inches in diameter, the acceptance and repair criteria must comply with Clause 9.27.1 of AWS D1.1.

07-15-16

For UT of other welded joints, the acceptance and repair criteria must comply with Table 6.3 of AWS D1.1 for cyclically loaded nontubular connections.

After galvanization, perform additional inspection for toe cracks along the full length of all CJP groove welds at tube-to-transverse plate connections using UT.

When performing UT, use an authorized procedure under AWS D1.1, Annex S.

56-1.01D(2)(b)(iii) Radiographic Testing

The acceptance criteria for radiographic or real time image testing must comply with AWS D1.1 for tensile stress welds.

56-1.01D(2)(b)(iv) Longitudinal Seam Welds

The Engineer selects the random locations for NDT.

Grind the cover pass smooth at the locations to be tested.

If repairs are required in a portion of a tested weld, perform NDT on the repaired portion and on 25 percent of the untested portions of the weld. If more repairs are required, perform NDT on the entire weld.

56-1.01D(3) Department Acceptance

Reserved

Replace section 56-2.01D(2)(b) with:

07-15-16

Reserved

Replace the 2nd sentence of the 1st paragraph of section 56-2.02F with:

07-15-16

Manufactured pipe posts must comply with one of the following:

Add to the list in the 1st paragraph of section 56-2.02F:

07-15-16

4. ASTM A1085, Grade A

Replace the 2nd paragraph of section 56-2.02F with:

07-15-16

You may fabricate pipe posts from structural steel complying with ASTM A36/A36M, ASTM A709/A709M, Grade 36, or ASTM A572/A572M, Grades 42 or 50.

07-15-16

Delete the last sentence in the 1st paragraph of section 56-2.02K(2).

07-15-16

Delete the 3rd paragraph of section 56-2.02K(2).

Replace the 2nd paragraph of section 56-2.02K(4) with:

07-15-16

Safety cable at walkways must not be kinked, knotted, deformed, frayed, or spliced.

Replace the 1st sentence of the paragraph in section 56-2.02K(5) with:

07-15-16

The edges of handholes and other large post and arm openings must be ground smooth.

Replace the heading of section 56-3 with:

07-15-16

56-3 STANDARDS, POLES, PEDESTALS, AND POSTS

Replace the paragraph in section 56-3.01A with:

07-15-16

Section 56-3 includes general specifications for fabricating and installing standards, poles, pedestals, and posts.

Replace section 56-3.01B(2)(b) with:

07-15-16

Standards with handholes must comply with the following:

1. Include a UL-listed lug and 3/16-inch or larger brass or bronze bolt for attaching the bonding jumper for non-slip-base standards.
2. Attach a UL-listed lug to the bottom slip base plate with a 3/16-inch or larger brass or bronze bolt for attaching the bonding jumper for slip-base standards.

Replace the 1st sentence of the 3rd paragraph of section 56-3.01C(2)(a) with:

07-15-16

After each standard, pole, pedestal, and post is properly positioned, place mortar under the base plate.

Replace the 2nd sentence of the 4th paragraph of section 56-3.01C(2)(a) with:

07-15-16

The top of the foundation at curbs or sidewalks must be finished to curb or sidewalk grade.

Replace the 10th paragraph of section 56-3.01C(2)(a) with:

07-15-16

Except when located on a structure, construct foundations monolithically.

Replace the 13th paragraph of section 56-3.01C(2)(a) with:

07-15-16

Do not erect standards, poles, pedestals, or posts until the concrete foundation has cured for at least 7 days.

Replace the 14th paragraph in section 56-3.01C(2)(a) with:

07-15-16

The Engineer selects either the plumbing or raking technique for standards, poles, pedestals, and posts. Plumb or rake by adjusting the leveling nuts before tightening nuts. Do not use shims or similar devices. After final adjustments of both top nuts and leveling nuts on anchorage assemblies have been made and each standard, pole, pedestal, and post on the structure is properly positioned, tighten nuts as follows:

1. Tighten leveling nuts and top nuts, following a crisscross pattern, until bearing surfaces of all nuts, washers, and base plates are in firm contact.
2. Use an indelible marker to mark the top nuts and base plate with lines showing relative alignment of the nut to the base plate.
3. Tighten top nuts following a crisscross pattern:
   - 3.1. Additional 1/6 turn for anchor bolts greater than 1-1/2 inches in diameter.
   - 3.2. Additional 1/3 turn for other anchor bolts.
   - 3.3. Tightening tolerance for all top nuts is ± 1/8 turn.

Replace the 1st sentence of the 4th paragraph of section 56-3.01C(2)(b) with:

07-15-16

If shown, use sleeve nuts on Type 1 standards.

Add to section 56-3.01C(2)(b):

07-15-16

Spiral reinforcement must be continuous above the bottom of the anchor bolts. The top termination must be either:

1. 1'-6" lap beyond the end of pitch with a 90-degree hook extending to the opposite side of the cage, or
2. 1'-6" lap beyond the end of pitch with 2 evenly spaced authorized mechanical couplers

Replace the 1st sentence of the paragraph in section 56-3.02A(4)(b) with:

07-15-16

For cast slip bases for standards and poles with shaft lengths of 15 feet or more, perform RT on 1 casting from each lot of a maximum of 50 castings under ASTM E94.

Replace the 2nd paragraph of section 56-3.02B(1) with:

07-15-16

Material for push button posts, pedestrian barricades, and guard posts must comply with ASTM A53/A53M or ASTM A500/A500M.

Add to section 56-3.02B(1):

07-15-16

Steel pipe standards and mast arms must be hot dip galvanized after manufacturing. Remove spikes from galvanized surfaces.

Replace the 2nd paragraph of section 56-3.02B(2) with:

07-15-16

HS anchor bolts, nuts, and washers must comply with section 55-1.02D(1) and the following:

1. Bolt threads must be rolled
2. Hardness of HS anchor bolts must not exceed 34 HRC when tested under ASTM F606
3. Galvanization must be by mechanical deposition
4. Nuts must be heavy-hex type
5. Each lot of nuts must be proof load tested

Replace the 8th paragraph of section 56-3.02B(2) with:

07-21-17

HS cap screws for attaching arms to standards must comply with ASTM F3125 Grade A325 or ASTM A449, and the mechanical requirements in Grade A325 after galvanizing. Coat threads of cap screws with a colored lubricant that is clean and dry to the touch. The lubricant color must contrast the zinc coating color on the cap screw such that the presence of the lubricant is visually obvious. The lubricant must be insoluble in water or the fastener components must be shipped to the job site in a sealed container.

Replace the 2nd sentence of the 9th paragraph of section 56-3.02B(2) with:

07-15-16

During manufacturing, properly locate the position of the luminaire arm on the arm plate to avoid interference with the cap screw heads.

Add to section 56-3.02B(3)(a):

07-15-16

Steel having a nominal thickness greater than 2 inches that is used for tube-to-transverse plate connections must have a minimum CVN impact value of 20 ft-lb at 20 degrees F when tested under ASTM E23.

Add to section 56-3.02B(3)(c):

07-15-16

The length of telescopic slip-fit splices must be at least 1.5 times the inside diameter of the exposed end of the female section.

For welds connecting reinforced handholes or box-type pole plate connections to a tubular member, the start and stop points must be at points located on a longitudinal axis of symmetry of the tube coinciding with the axis of symmetry of the hand hole or pole plate.

Replace the table in the 1st paragraph of section 56-3.02C with:

07-15-16

Slip Base Bolt Tightening Requirements

Standard type	Torque (ft-lb)
15-SB	150
15-SBF	150
30	150
31	200

Replace the 1st sentence of the 2nd paragraph of section 56-3.02C with:

07-15-16

Bolted connections attaching signal or luminaire arms to standards, poles, and posts are considered slip critical.

Add to section 56-3.06B:

07-15-16

Manufacture the mast arm from standard pipe, free from burrs. Each mast arm must have an insulated wire inlet and wood pole mounting brackets for the mast arm and tie-rod cross arm. Manufacture tie rod from structural steel and pipe.

07-15-16

Delete the 2nd paragraph of section 56-3.06C.

Replace the 1st sentence of the 3rd paragraph of section 56-3.06C with:

07-15-16

Mount the mast arm for luminaires to provide a 34-foot mounting height for a 165 W LED luminaire and a 40-foot mounting height for a 235 W LED luminaire.

^^

58 SOUND WALLS

04-20-18

Replace *2010 CBC* at each occurrence in section 58-2.01D(2)(c) with:

04-20-18

2016 CBC

Replace *section 1704* in the 1st paragraph of section 58-2.01D(2)(c)(i) with:

04-20-18

section 1705

Replace *section 1704.5* in the 1st paragraph of section 58-2.01D(2)(c)(ii) with:

04-20-18

section 1705.4

^^

59 STRUCTURAL STEEL COATINGS

04-20-18

Replace *Type S* in the 2nd paragraph of section 59-1.02A with:

01-15-16

Type M or Type S

Add to the list in the 2nd paragraph of section 59-1.02B:

07-15-16

5. Manufactured abrasives.

Replace *Mineral and slag* in the 3rd paragraph of section 59-1.02B with:

07-15-16

Mineral, manufactured, and slag

Replace the 2nd paragraph of section 59-2.01A(3)(c) with:

04-20-18

Submit the work plan after attending the prepainting meeting and include:

1. Names of the painting contractor and any subcontractors to be used.
2. 1 copy of each applicable ASTM and SSPC specification and qualification procedure.
3. Coating manufacturer's guidelines and instructions for surface preparation, painting, drying, curing, handling, shipping, and storage of painted structural steel. Include testing methods and maximum allowable levels for soluble salts.
4. Materials, methods, and equipment to be used.
5. Proof of required SSPC-QP certifications. For work requiring SSPC-QP 1 or SSPC-QP 2 certification, include:
   - 5.1. List of all personnel who will perform blast cleaning or spray painting work.
   - 5.2. Proof of CAS certifications, as required under (1) SSPC-QP 1, Mandatory Annex A and (2) the SSPC CAS Implementation Schedule in effect at the time of contract advertisement.
6. Methods to control environmental conditions.
7. Methods to protect the coating during curing, shipping, handling, and storage.

8. Rinse-water collection plan.
9. Detailed paint repair plan for damaged areas.
10. Procedures for containing blast media and water.
11. Examples of proposed daily reports for testing to be performed, including type of testing, location, lot size, time, weather conditions, test personnel, and results.

07-15-16

Delete the 4th paragraph of section 59-2.01C(1).

Replace section 59-4.01 with:

04-20-18

59-4.01 GENERAL

Section 59-4 includes specifications for preparing and painting sign structures.

Preparing and painting of sign structures must comply with sections 59-2 and 59-3.

^^

60 EXISTING STRUCTURES

04-20-18

Replace section 60-3.02A with:

04-20-18

60-3.02A(1) General

60-3.02A(1) Summary

Section 60-3.02 includes specifications for (1) repairing concrete deck surfaces and (2) preparing concrete deck surfaces to receive an overlay or a deck treatment.

60-3.02A(2) Definitions

Reserved

60-3.02A(3) Submittals

Submit a work plan for chip seal removal. Include:

1. Description of equipment for chip seal removal
2. Procedure for residual chip seal removal from the deck after grinding or micro milling operations
3. Procedure for chip seal removal next to bridge rails, undulations, or drains

60-3.02A(4) Quality Assurance

Reserved

Add between the 5th and 6th paragraphs of section 60-3.02C(1):

04-20-18

Micro milling equipment must:

1. Have a minimum concrete removal depth of 0.04 inch
2. Provide a surface relief of at most 0.045 inch
3. Provide a 5/32-inch grade tolerance
4. Produce consistent depth of texture in the finished surface

Micro milling equipment must have:

1. 3 or 4 riding tracks

2. Automatic grade control system with electronic averaging and 3 sensors on each side
3. Conveyer system that leaves no debris on the bridge
4. Drum that operates in an up-milling direction
5. Bullet tooth tools with polycrystalline diamond enhanced cutting tips
6. Maximum tool spacing of 0.20 inch
7. Maximum operating weight of 66,000 lb
8. Maximum track unit weight of 6,000 lb/ft
9. New tooth tools at the start of the work

Produce the finished surface using 2 passes of the micro milling equipment.

Add to section 60-3.02C(1):

04-20-18

Dust must not be blown into the air while blowing the deck.

Replace the 2nd paragraph of section 60-3.02C(2) with:

04-20-18

Before removing concrete, clean the deck surface by vacuuming, then blow the deck clean with high-pressure air.

Replace the 3rd paragraph of section 60-3.02C(2) with:

04-20-18

Remove the deck surface by micro milling or high-pressure water jetting.

Replace the paragraphs in section 60-3.02C(4) with:

04-20-18

Where shown, remove bituminous chip seals, bituminous slurry seals, and polymer chip seals entirely from bridge decks by grinding or micro milling. Remove no more than 1/4 inch of concrete deck surface.

Grinding must comply with section 42-3.

Any residual chip seals and other foreign materials remaining in the bridge deck after the grinding or micro milling operation must be removed by other authorized means.

Replace the 1st paragraph of section 60-3.02C(6) with:

04-20-18

Before placing rapid setting concrete patches, abrasive blast clean the contact surfaces of existing concrete and reinforcing steel. Remove at least 1/8 inch of concrete and all foreign material. Immediately before placing new concrete, clean surfaces by vacuuming and (1) pressure jetting or (2) other authorized means to remove debris.

Replace the 2nd paragraph of section 60-3.02C(7) with:

04-20-18

Perform the following activities in the order listed:

1. Abrasive blast the deck surface with steel shot. Steel shot must comply with SSPC-AB 3. Recycled steel shot must comply with SSPC-AB 2.
2. Clean the deck surface by vacuuming.
3. Blow the deck surface clean using high-pressure oil-free air.

Replace the last paragraph of section 60-3.02C(7) with:

04-20-18

If the deck surface becomes contaminated or you allow traffic on the clean deck before placing the deck treatment or overlay, abrasive blast clean the contaminated area, clean the deck by vacuuming, and blow the deck surface clean using high-pressure oil-free air.

Replace the 1st paragraph of section 60-3.03B(1)(c) with:

04-20-18

Submit a work plan for applying the methacrylate resin treatment. Include in the plan:

1. Schedule of work for the test area and for each bridge
2. Procedure for storing and handling resin components and absorbent material
3. Description of equipment for applying resin
4. Range of gel time and final cure time for resin
5. Description of absorbent material to be used
6. Description of equipment for applying and removing excess sand and absorbent material
7. Procedure for removing resin from the deck and equipment to be used
8. Procedure for avoiding spills or discharges of methacrylate, including materials and equipment
9. Procedure for cleaning up spills or discharges of methacrylate, including materials and equipment
10. Procedure for preventing resin from dripping from the structures
11. Procedure for disposing of excess resin and containers

Replace the 4th paragraph of section 60-3.03B(1)(d) with:

04-20-18

The Engineer performs friction testing of the treated test area under California Test 342. After completion of the test area, allow 10 days for the Engineer to perform the testing.

Replace the table in the 2nd paragraph of section 60-3.03B(2) with:

04-20-18

Quality characteristic	Test method	Requirement
Volatile content[a] (max, %)	ASTM D2369	30
Viscosity[a] (max, cP, Brookfield RV with UL adaptor , 50 RPM, at 25 °C)	ASTM D2196	25
Specific gravity[a] (min, at 25 °C)	ASTM D1475	0.90
Flash point[a] (min, °C)	ASTM D3278	82
Vapor pressure[a] (max, mm Hg, at 25 °C)	ASTM D323	1.0
Tack-free time (max, minutes) except Sample 50 ± 5g Test 2 ± 0.05g in 55 ± 5 mm diameter disposable aluminum weighing dish	ASTM C679	400
PCC-saturated surface-dry bond strength (min, psi, at 24 hours and 70 ± 2 °F)	California Test 551	500

[a]Perform test before adding the initiator.

Replace the 9th paragraph of section 60-3.03B(3) with:

04-20-18

Traffic or equipment is not allowed on the treated surface until you have verified that the following requirements have been met and the opening of the treated surface to traffic and equipment is authorized:

1. Treated deck surface is tack free and not oily
2. Sand cover adheres and resists brushing by hand
3. Excess sand and absorbent material has been removed
4. No material will be tracked beyond the limits of treatment by traffic

Replace the 1st paragraph of section 60-3.04B(1)(c) with:

04-20-18

Submit a work plan for the placement of the deck overlay. Include the following in the work plan:

1. Schedule of overlay work for each bridge and a schedule of work for any trial overlays
2. Method for storage and handling of methacrylate resin and polyester concrete components
3. Description of equipment for applying methacrylate resin
4. Description of equipment for measuring, mixing, placing, and finishing the polyester concrete overlay
5. Method for isolating expansion joints and drainage
6. Cure time for polyester concrete
7. Description of equipment for applying sand
8. Method for avoiding spills or discharges of methacrylate and polyester concrete, including materials and equipment
9. Method for cleaning up spills or discharge of methacrylate and polyester concrete, including materials and equipment
10. Procedure for preventing resin from dripping from the structures
11. Method for disposal of excess methacrylate resin, polyester concrete, and containers

Replace the 3rd paragraph of section 60-3.04B(1)(c) with:

04-20-18

Submit test samples of methacrylate resins, polyester resins, and aggregates with a certificate of compliance and manufacturer's test results at least 15 days before use.

Replace the 4th paragraph of section 60-3.04B(1)(d) with:

04-20-18

The Engineer performs friction testing of the trial overlay under California Test 342. After completion of the trial overlay, allow 10 days for the Engineer to perform the testing.

Add to the section 60-3.04B(1)(d):

04-20-18

Place polyester concrete overlay on:

1. Portland cement concrete no sooner than 28 days after concrete placement
2. Portland cement based RSC no sooner than 14 days after concrete placement and your test results for prequalification of RSC show that the concrete attained at least 3,500 psi compressive strength
3. RSC using hydraulic cement other than portland cement no sooner than 3 days after concrete placement and your test results for prequalification of RSC show that the concrete attained at least 3,500 psi compressive strength
4. Magnesium phosphate based rapid setting concrete patch material no sooner than 3 days after final set
5. Modified high alumina based rapid setting concrete patch material no sooner than 30 minutes after final set

Replace the 3rd paragraph of section 60-3.04B(3)(b) with:

04-20-18

Clean the deck by vacuuming, then blow the deck clean with high-pressure oil-free air. Dust must not be blown into the air while blowing the deck.

04-20-18

Delete the 6th paragraph of section 60-3.04B(3)(b).

Replace the 3rd paragraph of section 60-3.04B(3)(c) with:

04-20-18

Finishing equipment for polyester concrete must:

1. Have grade control capabilities resulting in a roadway surface that meets the smoothness requirements of section 51-1.01D(3)(b)(ii) and is capable of adjusting for a variable thickness overlay along and across the existing deck surface. The use of fixed height skid-supported strike off equipment is not allowed.
2. Be used to consolidate the polyester concrete.
3. Have a 12-foot minimum paving width.
4. Be self-propelled and equipped with automatic screed controls and sensing devices that control the thickness, longitudinal grade, and transverse screed slope. Advancing the finishing equipment with winches or a pulling device is not allowed.

07-15-16

Delete the 2nd sentence in the 11th paragraph of section 60-3.04B(3)(c).

Replace the 4th paragraph of section 60-4.02C(1) with:

04-20-18

Clean prepared areas of dust and loose and deleterious materials by vacuuming, abrasive blast cleaning, and using high-pressure oil-free air. Re-blast contaminated areas before starting concrete placement activities. Dust must not be blown into the air while blowing the deck.

Replace the 1st paragraph of section 60-4.02C(2) with:

04-20-18

Abrasive-blast clean concrete surfaces to be refinished. Clean blast-cleaned surfaces by vacuuming, then blow them clean using high-pressure oil-free air. Dust must not be blown into the air while blowing the deck.

Replace the paragraphs in section 60-4.02C(3) with:

04-20-18

Blow surfaces to be refinished with high-pressure oil-free air immediately before placing rapid setting concrete. Abrasive-blast clean concrete surfaces that are contaminated before the concrete is placed.

Allow traffic on new concrete under the manufacturer’s instructions and when authorized.

Replace the 3rd paragraph of section 60-4.03C(5) with:

04-20-18

Allow traffic on new concrete under the manufacturer’s instructions and when authorized.

Replace *clause 3.13.2* in item 2 in the list in the 1st paragraph of section 60-4.06A(4) with:

04-20-18

clause 3.13.2(2)

Replace *Suffix B* in the 3rd paragraph of section 60-4.06B(1) with:

Suffix D

^^

DIVISION VII DRAINAGE FACILITIES

64 PLASTIC PIPE

07-15-16

Replace *Reserved* in section 64-3 with:

07-15-16

64-3.01 GENERAL

64-3.01A Summary

Section 64-3 includes specifications for constructing slotted plastic pipe.

Slotted plastic pipe includes structure excavation, concrete backfill, connecting new pipe to new or existing facilities, concrete collars, reinforcement, and other connecting devices.

64-3.01B Definitions

Reserved

64-3.01C Submittals

If an *or* equal slotted plastic pipe is being considered, it must be submitted 30 days before installation for approval.

If RSC is used for concrete backfill for slotted plastic pipe, submit the concrete mix design and test data from an authorized laboratory 10 days before excavating the pipe trench. The laboratory must specify the cure time required for the concrete mix to attain 2,000 psi compressive strength when tested under California Test 521.

Heel-resistant grates if specified must be submitted 30 days before installation for approval. Anchorage details must be included in the submittal.

64-3.01D Quality Assurance

Reserved

64-3.02 MATERIALS

64-3.02A General

Not Used

64-3.02B Slotted Plastic Pipes

Slotted plastic pipe must be one of the following or equal:

Slotted Plastic Pipe

12" diameter	18" diameter
Zurn Z888-12	Zurn Z888-18
ACO Qmax 350	ACO Qmax 365
ADS Duraslot-12	ADS Duraslot-18

64-3.02C Concrete Backfill

Concrete for concrete backfill for slotted plastic pipe must comply with the specifications for minor concrete. You may use RSC instead of minor concrete for concrete backfill.

If RSC is used for concrete backfill, the RSC must:

1. Contain at least 590 pounds of cementitious material per cubic yard
2. Comply with section 90-3.02A, except section 90-1 does not apply
3. Comply with section 90-2

64-3.02D Heel-Resistant Grates

Heel-resistant grate must:

1. Be designed to carry traffic loadings
2. Comply with ADA requirements
3. Be constructed of steel or cast iron
4. Be provided by the same manufacturer of the slotted plastic pipe
5. Comply with the manufacturer's instructions

64-3.02E Bar Reinforcement

Bar reinforcement must comply with ASTM A615/A615M, Grade 60 or ASTM A706/A706M, Grade 60.

64-3.02F Miscellaneous Metal

Ductile iron, nuts, bolts, and washers must comply with section 75.

64-3.02G Grout

Grout must be non-shrink grout complying with ASTM C1107/C1107M.

64-3.02H Curing Compound

Non-pigmented curing compound must comply with ASTM C309, Type 1, Class B.

64-3.02I End Caps

End cap must:

1. Be provided by the same manufacturer of the slotted plastic pipe
2. Prevent concrete backfill from entering the pipe

64-3.03 CONSTRUCTION

64-3.03A General

Cover the grate slots with heavy-duty tape or other authorized covering during paving and concrete backfilling activities to prevent material from entering the slots.

64-3.03B Preparation

Pave adjacent traffic lanes before installing slotted plastic pipes.

Excavation must comply with section 19-3.

64-3.03C Installation

Lay and join slotted plastic pipes under the pipe manufacturer’s instructions.

Lay pipes to line and grade with sections closely jointed and adequately secured to prevent separation during placement of the concrete backfill. If the pipes do not have a positive interlocking mechanism like a slot and tongue connection, secure the sections together with nuts, bolts, and washers before backfilling.

The top of slotted plastic pipes must not extend above the completed surface. Position the pipes so that the concrete backfill is flush with the surrounding grade and above the top of the grate from 1/8 to 1/4 inch.

Place channels with the male and female ends facing each other.

Place lateral support bar reinforcement on both sides of the grate slots. The support bar reinforcement must run the full length of the slots.

Anchor heel-resistant grates to the concrete backfill under the manufacturer's instructions.

64-3.03D Concrete Backfill

Wherever minor concrete is used for concrete backfill for slotted plastic pipe, do not allow traffic on top of the backfill within 7 days of placement.

Wherever RSC is used for concrete backfill for slotted plastic pipe, do not allow traffic on top of the backfill before the required cure time of 2,000 psi is achieved.

Place concrete backfill where shown.

Consolidate the concrete backfill with high-frequency internal vibrators.

Texture the concrete backfill surface with a broom or burlap drag to produce a durable skid-resistant surface.

Apply a non-pigmented curing compound to the exposed concrete backfill surface whenever the atmospheric temperature is 90 degrees F or greater after placement.

64-3.03E Transition Fittings

Use transition fittings to connect slotted plastic pipes to drainage inlets. The transition fittings must be supplied by the same pipe manufacturer.

Where welds are required in transition fittings, welds must comply with the pipe manufacturer's instructions. The completed welds must not have visible pinholes.Fill the gaps around the pipes in the inlet structure wall with non-shrink grout where the pipes connect to an existing drainage structure. Install the grout under the pipe manufacturer's instructions.

Cut the pipes as shown after the grout used to seal the transition fitting has cured for at least 24 hours.

64-3.04 PAYMENT

Slotted plastic pipe is measured along the centerline of the pipe and parallel with the slope line. If the pipe is cut to fit a structure or slope, the payment quantity is the length of pipe necessary to be placed before cutting, measured in 2-foot increments.

^^

68 SUBSURFACE DRAINS

07-21-17

Replace the 1st sentence in the 12th paragraph of section 68-4.03 with:

07-21-17

Place Type G pavement markers with retroreflective face facing away from the oncoming traffic under section 81-3.02C on paved shoulders or dikes at outlet, vent, and cleanout locations where authorized.

^^

70 MISCELLANEOUS DRAINAGE FACILITIES

04-20-18

Replace section 70-6 with:

04-20-18

70-6 GRATED LINE DRAINS

70-6.01 GENERAL

70-6.01A Summary

Section 70-6 includes specifications for installing grated line drains.

Use only 1 type of grated line drain.

70-6.01B Definitions

Reserved

70-6.01C Submittals

Submit the following:

1. Certificate of compliance for the grated line drains from the manufacturer
2. Documentation of the channel discharge capacity
3. Inspection report of the completed grated line drain

70-6.01D Quality Assurance

Reserved

70-6.02 MATERIALS

70-6.02A General

Grated line drain must be on the Authorized Material List for grated line drains and must have (1) a channel discharge capacity equal to or greater than the capacity shown and (2) the minimum slope shown.

Line drain sections must be either non-sloped uniform depth sections from 4-7/16 to 12 inches or pre-sloped sections with a minimum continuous 0.6 percent slope with graduated depths from 4-7/16 to 12 inches.

Concrete backfill must comply with the specifications for minor concrete.

In freeze-thaw areas, add an air entraining admixture at a rate to achieve an air content of 4 ± 1.5 percent in the freshly mixed concrete.

Reinforcing bars must be Grade 60 and comply with section 52. Mechanical splice couplers must be commercial-quality double-sleeve type with friction locking screws for use with Grade 60 steel.

70-6.02B Line Drain Channel

Line drain channel may be monolithic polymer concrete, fiberglass, high density polyethylene, or cast-in-place using expanded polystyrene form. End caps must be provided by the line drain manufacturer.

Drain channel sections must not have side extensions. The interior surface of the line drain channel must be smooth below the level of the frame, grate, and associated connections.

70-6.02C Line Drain Frames and Grates

Grated line drain frames and grates must comply with section 75-2 except grates must be ductile iron. Frames and grates include bolts, nuts, frame anchors, connector cover and other connecting hardware. Steel frame must be galvanized under section 75-1.

Frames and grates must comply with AASHTO M306 and be classified heavy duty traffic rated with a transverse proof-load strength of 25,000 pounds.

Frames and grates must be anchored into the body of the line drain or concrete backfill. Grates must be non-removable.

Steel anchoring rods and shear studs, if used, must comply with ASTM A1044.

Steel cover plate must comply with ASTM A36 and be galvanized under section 75-1.02B. Except for grates installed within designated pedestrian paths of travel, grate design must accept inflow of runoff through openings consisting of a minimum of 60 percent of the total top surface area of the grate. Individual openings or slots must have a dimension not greater than 2 inches measured in the direction of the grated line drain flow line.

Grates installed within designated pedestrian paths of travel must be certified as conforming to the provisions of the ADA.

70-6.03 CONSTRUCTION

Excavation and backfill must comply with section 19-3.

Grated line drains must be installed in trenches excavated to the lines and grades established by the Engineer. Grade and prepare the bottom of the trench to provide a firm and uniform bearing throughout the entire length of the grated line drain.

Installation of grated line drains and joints must comply with the manufacturer's instructions.

Install grated line drains with sections closely jointed and secured such that no separation of the line drains occur during backfilling.

The frame or grate must not extend above the level of the surrounding concrete backfill.

Connect grated line drains to new or existing drainage facilities as shown. Drill and bond dowels must comply with section 51-1.03E(5).

Place concrete backfill in the trench as shown. Place against undisturbed material at the sides and bottom of the trench in a manner that prevents (1) floating or shifting of the grated line drain and (2) voids or segregation in the concrete.

Immediately remove foreign material that falls into the trench before or during concrete placement. Prevent material from entering the grated line drain during construction.

Where necessary, construct and compact earth plugs at the ends of the concrete backfill to contain the concrete within the trench.

Place a 1/2-inch isolation joint where grated line drain is placed in PCC pavement. Isolation joint must comply with section 40-1.

Contraction and expansion joints must comply with section 73-2.

Secure frame and grate or line drain wall to the surrounding concrete backfill with steel anchoring rods as shown. Alternative securing methods must provide a minimum pullout resistance of 685 lb/ft of length of grated line drain frame.

Concrete backfill must be finished flush with the adjacent surfacing.

The surface of the concrete must be textured with a broom or burlap drag to produce a durable skid-resistant surface.

Remove all forming material from the cast-in-place drain channel without gouging or marring the surface. Patch spalls, holes or rock pockets with mortar with a cement to sand ratio of 1 to 3 by volume.

Do not allow traffic or equipment on the concrete backfill until 7 days after placement or before the concrete has attained a strength of 2,000 psi, whichever is sooner.

70-6.04 PAYMENT

Not Used

^^

71 EXISTING DRAINAGE FACILITIES

07-21-17

Replace items 5 and 6 in the list in the 1st paragraph of section 71-3.01D with:

01-15-16

5. Performing postrehabilitation inspection

Add after the 4th paragraph of section 71-3.01D:

01-15-16

Record the quantity of grout that is installed and submit this quantity. The Department does not pay for grout that leaks through to the inside of the culvert. The Department does not pay for grout material that is wasted, disposed of, or remaining on hand after the completion of the work.

Replace *EDPM* in the heading of section 71-3.05 with:

07-21-17

EPDM

Replace the 2nd heading in section 71-5.03 with:

01-15-16

71-5.03B Frames, Covers, Grates, and Manholes

^^^

DIVISION VIII MISCELLANEOUS CONSTRUCTION

72 SLOPE PROTECTION

07-21-17

Add to section 72-1.04:

07-21-17

Payment for rock slope protection fabric is not included in the payment for rock slope protection.

Replace the 1st and 2nd paragraphs of section 72-2.02B with:

07-15-16

For method A and B placement and the class of RSP described, comply with the rock gradation shown in the following table:

Rock Gradation

Nominal RSP class by median particle diameter[b]		Nominal median particle weight W_{50}[c,d]	d_{15}[c] (inches)		d_{50}[c] (inches)		d_{100}[c] (inches)	Placement
Class[a]	Diameter (inches)		Min	Max	Min	Max	Max	Method
I	6	20 lb	3.7	5.2	5.7	6.9	12.0	B
II	9	60 lb	5.5	7.8	8.5	10.5	18.0	B
III	12	150 lb	7.3	10.5	11.5	14.0	24.0	B
IV	15	300 lb	9.2	13.0	14.5	17.5	30.0	B
V	18	1/4 ton	11.0	15.5	17.0	20.5	36.0	B
VI	21	3/8 ton	13.0	18.5	20.0	24.0	42.0	A or B
VII	24	1/2 ton	14.5	21.0	23.0	27.5	48.0	A or B
VIII	30	1 ton	18.5	26.0	28.5	34.5	48.0	A or B
IX	36	2 ton	22.0	31.5	34.0	41.5	52.8	A
X	42	3 ton	25.5	36.5	40.0	48.5	60.5	A
XI	46	4 ton	28.0	39.4	43.7	53.1	66.6	A

[a]For RSP Classes I–VIII, use Class 8 RSP fabric. For RSP Classes IX–XI, use Class 10 RSP fabric.
[b]Intermediate or B dimension (i.e., width) where A dimension is length and C dimension is thickness.
[c]d%, where % denotes the percentage of the total weight of the graded material.
[d]Values shown are based on the minimum and maximum particle diameters shown and an average specific gravity of 2.65. Weight will vary based on specific gravity of rock available for the project.

Replace the table in section 72-2.02C with:

07-15-16

Fabric Class

Class	Largest rock gradation class used in slope protection
8	Classes I–VIII
10	Classes IX–XI

Replace the table in the 1st paragraph of section 72-3.02C with:

07-15-16

Concreted-Rock Gradation

Nominal RSP class by median particle diameter[b]		Nominal median particle weight W_{50}[c,d] Weight[a]	d_{15}[c]		d_{50}[c]		d_{100}[c]
Class[a]	Size (inches)		Min	Max	Min	Max	Max
I	6	20 lb	3.7	5.2	5.7	6.9	12.0
II	9	60 lb	5.5	7.8	8.5	10.5	18.0
III	12	150 lb	7.3	10.5	11.5	14.0	24.0
V	18	1/4 ton	11.0	15.5	17.0	20.5	36.0
VII	24	1/2 ton	14.5	21.0	23.0	27.5	48.0

[a]Use Class 8 RSP fabric.
[b]Intermediate or B dimension (i.e., width) where A dimension is length and C dimension is thickness.
[c]d%, where % denotes the percentage of the total weight of the graded material.
[d]Values shown are based on the minimum and maximum particle diameters shown and an assumed specific gravity of 2.65. Weight will vary based on specific gravity of rock available for the project.

Replace the table in section 72-3.03E with:

07-15-16

Minimum Concrete Penetration

	Rock class				
	VII	V	III	II	I
Penetration (inches)	18	14	10	8	6

Replace the 1st paragraph of section 72-11.01D with:

07-21-17

The payment quantity for slope paving (concrete) constructed with minor concrete or shotcrete is the product of (1) the area computed from measurements along the slope of the actual areas constructed and (2) the thickness shown for the concrete slope paving.

^^

73 CONCRETE CURBS AND SI`DEWALKS

04-20-18

Add to the beginning of the introductory clause of the 3rd paragraph of section 73-1.03B:

07-21-17

Prepare subgrade to required grade and cross section.

Replace section 73-3.01A with:

07-15-16

Section 73-3 includes specifications for constructing sidewalks, gutter depressions, island paving, curb ramps, and driveways.

Replace *Not Used* in section 73-3.04 with:

04-20-18

The payment quantity for minor concrete (curb ramp) does not include detectable warning surface.

Add to the end of the 1st paragraph of section 73-10.03:

07-21-17

Removal of concrete includes the removal of detectable warning surfaces.

Replace *Not Used* in section 73-10.04 with:

07-21-17

Detectable warning surface placed on existing concrete is paid for as a separate bid item.

^^

74 PUMPING EQUIPMENT AND CONTROLS

04-15-16

Replace *87-1.03K* in the 4th paragraph of section 74-3.03B(2) with:

04-15-16

87

^^

75 MISCELLANEOUS METAL

04-20-18

Replace *ASTM A325, Type 1* in the row for *Bolts* in table in the 1st paragraph of section 75-1.02A with:

07-21-17

ASTM F3125, Grade A325, Type 1

Replace *ASTM F1852, Type 1* in the row for *Tension control bolts* in the table in the 1st paragraph of section 75-1.02A with:

07-21-17

ASTM F3125, Grade F1852, Type 1

Replace *ASTM F593 or F738M* in the row for *Bolts, screws, studs, threaded rods, and nonheaded anchor bolts* in the table in the 1st paragraph of section 75-1.02A with:

04-20-18

ASTM F593

Replace *A325* in the *Material* column in the table in the 1st paragraph of section 75-1.02B with:

07-21-17

F3125, Grade A325

Replace *A325* in the second footnote in the table in the 1st paragraph of section 75-1.02B with:

07-21-17

F3125, Grade A325

Replace *compounds* in the 4th paragraph of section 75-3.02B with:

04-20-18

systems

^^

78 INCIDENTAL CONSTRUCTION

07-21-17

Add between the 1st and 2nd paragraphs of section 78-2.01:

07-21-17

Notify the Engineer at least 7 days before you construct a survey monument or adjust a monument cover to grade. Do not disturb a survey monument without authorization.

Replace section 78-4.03 with:

07-21-17

78-4.03 PAINTING CONCRETE

78-4.03A General

78-4.03A(1) General

78-4.03A(1)(a) Summary

Section 78-4.03A includes general specifications for preparing and painting concrete surfaces.

78-4.03A(1)(b) Definitions

Reserved

78-4.03A(1)(c) Submittals

Submit the coating manufacturer's application instructions at least 7 days before use.

78-4.03A(1)(d) Quality Assurance

78-4.03A(1)(d)(i) General

Reserved

78-4.03A(1)(d)(ii) Test Panels

Reserved

78-4.03A(2) Materials

78-4.03A(2)(a) General

Coatings for concrete must be white.

78-4.03A(2)(b) Paint

Coatings for concrete must comply with the specifications for acrylic emulsion paint for exterior masonry.

78-4.03A(2)(c) Sealer

Reserved

78-4.03A(2)(d) Sealing Compound

Reserved

78-4.03A(3) Construction

78-4.03A(3)(a) General

Do not paint new concrete until it is at least 28 days old. Anywhere metal is adjacent to a joint, seal the joint between surfaces to be painted and the adjacent metal with a sealing compound before applying the paint.

78-4.03A(3)(b) Surface Preparation

Prepare concrete surfaces under SSPC-SP 13/NACE no. 6.

Pressure rinse the prepared surfaces before applying the coating. The surfaces must be thoroughly dry at the time of painting. You may use artificial drying methods if authorized.

78-4.03A(3)(c) Application

Apply at least 2 coats under the manufacturer's instructions and SSPC-PA 7. Protect adjacent surfaces during painting using an authorized method.

78-4.03A(4) Payment

Not Used

78-4.03B Simulated Stone Masonry and Textured Concrete

Reserved

78-4.03C–78-4.03G Reserved

Replace the paragraph of section 78-4.04A(3)(a) with:

07-21-17

Anywhere metal is adjacent to a joint, seal the joint between the surfaces to be stained and the adjacent metal with a sealing compound before applying the stain.

Replace the heading of section 78-4.04B(1)(c)(iii) with:

07-21-17

Staining Quality Work Plan

Replace *an application plan* in the 1st sentence in the paragraph of section 78-4.04B(1)(c)(iii) with:

07-21-17

a staining quality work plan

Replace *application* in the 2nd sentence in the paragraph of section 78-4.04B(1)(c)(iii) with:

07-21-17

work

Replace *application plan* in the 1st sentence in the paragraph of section 78-4.04B(1)(d)(iii) with:

07-21-17

staining quality work plan

^^

80 FENCES

04-20-18

Add to the list in the 2nd paragraph of section 80-3.02B:

04-20-18

3. Group IC, 50,000 psi yield, for round steel pipes

Add between the 2nd and 3rd paragraphs of section 80-3.02B:

04-20-18

Group IC, 50,000 psi yield, for round steel pipes may be used instead of group IA, regular grade steel round pipes of the same diameter.

Replace *3-1/4-inch-vertical and 5-1/4-inch-horizontal mesh* in the 4th paragraph of section 80-3.02C with:

04-20-18

3-1/2-inch-vertical and 5-inch-horizontal mesh

Replace section 80-4 with:

07-15-16

80-4 WILDLIFE EXCLUSION FENCES

80-4.01 GENERAL

80-4.01A General

Section 80-4 includes specifications for constructing wildlife exclusion fences.

Constructing a wildlife exclusion fence includes the installation of any signs specified in the special provisions.

80-4.01B Materials

Each T post must:

1. Comply with ASTM A702
2. Be metal and have an anchor plate
3. Be painted black or galvanized

80-4.01C Construction

Not Used

80-4.01D Payment

Not Used

80-4.02 DESERT TORTOISE FENCES

80-4.02A General

Section 80-4.02 includes specifications for constructing desert tortoise fences.

80-4.02B Materials

80-4.02B(1) Permanent Desert Tortoise Fences

80-4.02B(1)(a) General

Each wire tie and hog ring for a permanent desert tortoise fence must comply with section 80-2.02F.

Each hold down pin must:

1. Be U-shaped, with 2 minimum 6-inch long legs
2. Have pointed ends
3. Be at least 11-gauge wire
4 Be galvanized
5. Be commercial quality

80-4.02B(1)(b) Hardware Cloth

The hardware cloth must:

1. Comply with ASTM A740
2. Be welded or woven galvanized steel wire fabric
3. Be made of at least 14-gauge wire
4. Be 36 inches wide

80-4.02B(1)(c) Barbless Wire

The barbless wire must:

1. Comply with ASTM A641/A641M

2. Be at least 14-gauge wire
3. Have a Class 1 zinc coating

80-4.02B(1)(d) Posts

Each post must:

1. Comply with ASTM F1083
2. Be standard weight, schedule 40 steel pipe with a nominal pipe size of 1 inch
3. Be galvanized steel fence post conforming to ASTM A702

80-4.02B(2) Temporary Desert Tortoise Fences

The materials for a temporary desert tortoise fence must comply with section 80-4.02B(1), except the hardware cloth must be made of at least 16-gauge wire.

80-4.02C Construction

80-4.02C(1) General

Extend the hardware cloth a minimum of 24 inches above the ground.

Plumb the posts and pull the hardware cloth taut. Correct any alignment issues.

80-4.02C(2) Permanent Desert Tortoise Fences

Excavate the ground to form a trench before installing the posts and hardware cloth. Embed the posts at maximum 5-foot intervals into the ground. If T posts are used, use 5-foot lengths and embed the posts to match the above-ground height shown for the posts.

Securely fasten the hardware cloth to the posts with wire ties and to barbless wire with hog rings as shown. Pass the wire ties through the hardware cloth. Encircle the posts and barbless wire with the ties and tie them by twisting a minimum of 3 complete turns.

Bend the twisted ends of the ties down to prevent possible snagging. Close hog rings with their ends overlapping.

Bury the hardware cloth a minimum of 12 inches into the ground. Install the cloth in 1 continuous piece. You may cut the cloth into shorter segments if authorized.

Overlap the hardware cloth segments at posts, with a minimum overlap of 6 inches centered at a post. Wire tie the overlapped cloth to posts as shown. Prevent fraying by threading barbless wire along the vertical edges of the hardware cloth on either side of the post or use 3 equally spaced hog rings (6 hog rings per location) along each wire cloth edge.

Where bedrock or caliche substrate is encountered, use the bent hardware cloth detail if authorized. Transitions from buried-to-bent or bent-to-buried configuration must occur at a post location with a minimum 6-inch overlap of the hardware cloth as shown. The maximum spacing for hold down pins is 24 inches on center. Anchor in place with hold down pins the beginning and end corners of the hardware cloth placed on the ground.

Backfill the removed earth material into the trench created to install the hardware cloth and posts. Use an 8 lb or heavier hand tamper to compact the backfill around the posts and hardware cloth. Install a post at each corner of the cloth segments.

If a gate must be installed, attach the hardware cloth to the gate frame such that there is contact along the entire length of the gate between the finished ground surface and the lower edge of the cloth. Install the gate under section 80-10.

80-4.02C(3) Temporary Desert Tortoise Fences

Fold the horizontal edge of the hardware cloth at a 90° angle toward the tortoise habitat area. Ensure the clearance to the ground at the bend is from 0 to 2 inches.

Where the hardware cloth overlaps, secure the bend piece with one of the following:

1. Barbless wire threaded along the width of the cloth
2. Minimum of 4 hog rings equally spaced along the edge

Fasten the bent piece to the ground with hold down pins pushed completely into the ground.

When the temporary fence is no longer needed, compact soil into post holes with an 8 lb or heavier hand tamper.

80-4.02D Payment

Not Used

80-4.03–80-4.09 RESERVED

Replace *length* at each occurrence in section 80-10.02 with:

07-21-17

width

^^

DIVISION IX TRAFFIC CONTROL DEVICES

81 MISCELLANEOUS TRAFFIC CONTROL DEVICES

07-21-17

07-21-17

Delete section 81-3.02B.

Replace the 5th paragraph of section 81-3.03A with:

07-21-17

Apply pavement markers to the pavement with bituminous adhesive, flexible bituminous adhesive, standard set epoxy, or rapid set epoxy adhesive. Apply markers in pavement recesses with flexible bituminous adhesive.

Replace the 1st sentence in the 7th paragraph of section 81-3.03A with:

07-21-17

Completely cover the pavement surface where the pavement marker is to be applied or the bottom of the pavement marker with the adhesive without leaving any voids.

^^

83 RAILINGS AND BARRIERS

04-20-18

04-15-16

Delete *to* in the 4th paragraph of section 83-1.02B.

Replace the heading of section 83-2.01B with:

04-20-18

83-2.01B Minor Concrete Vegetation Control

Replace item 3 in the list in the 1st paragraph of section 83-2.02B(1)(e) with:

07-21-17

3. HS bolts must comply with ASTM F3125, Grade A325/A325M, or ASTM A449, or be fabricated from steel rods complying with ASTM A449. The bolts or rods must comply with the mechanical

requirements in ASTM F3125, Grade A325/A325M after galvanizing. The nuts and washers must comply with ASTM F3125, Grade A325/A325M.

Replace the row for *Bolts* in the table in the 1st paragraph of section 83-2.08B with:

07-21-17

Bolts	ASTM F3125, Grade A325/A325M

Replace the row for *Nuts and washers for bolts and threaded rods* in the table in the 1st paragraph of section 83-2.08B with:

07-21-17

Nuts for bolts and threaded rods	ASTM A563/A563M
Washers for bolts and threaded rods	ASTM F436/F436M

^^

84 MARKINGS

04-20-18

Add to the end of item 2 in the list in the 1st paragraph of section 84-2.01C:

04-20-18

, except for thermoplastic

Add to the list in the 1st paragraph of section 84-2.01C:

07-21-17

4. Material data sheet for thermoplastic primer

Add between the 1st and 2nd paragraphs of section 84-2.01C:

04-20-18

For each lot or batch of thermoplastic, submit a manufacturer's certificate of compliance with test results for the tests specified in section 84-2.01D. The date of test must be within 1 year of use.

Add to the end of section 84-2.01D:

04-20-18

Each lot or batch of thermoplastic must be tested under California Test 423 for:

1. Brookfield Thermosel viscosity
2. Hardness
3. Yellowness index, white only
4. Daytime luminance factor
5. Yellow color, yellow only
6. Glass bead content
7. Binder content

During the installation of thermoplastic traffic stripes or markings at the job site, apply a test stripe of the thermoplastic on suitable material in the presence of the Engineer. The test stripe must be at least 1 foot in length. The test stripe will be tested for yellow color, daytime luminance factor, and yellowness index requirements.

Replace the list in the1st paragraph of section 84-2.03C(2)(a) with:

07-21-17

1. To all roadway surfaces except for asphaltic surfaces less than 6 months old
2. At a minimum rate of 1 gallon per 300 square feet
3. To allow time for the thermoplastic primer to dry and become tacky prior to application of the thermoplastic

Replace *0.20 lb of thermoplastic per foot of 4-inch-wide solid stripe* in the 2nd paragraph of section 84-2.03C(2)(b) with:

07-21-17

0.36 lb of thermoplastic per foot of 6-inch-wide solid stripe

Replace *0.13 lb of thermoplastic per foot of 4-inch-wide solid stripe* in the 2nd paragraph of section 84-2.03C(2)(c) with:

07-21-17

0.24 lb of thermoplastic per foot of 6-inch-wide solid stripe

Replace *0.38 lb of thermoplastic per foot of 4-inch-wide solid stripe* in the 2nd paragraph of section 84-2.03C(2)(e) with:

07-21-17

0.57 lb of thermoplastic per foot of 6-inch-wide solid stripe

Replace *4-inch-wide yellow stripes* at each occurrence in section 84-2.03C(3)(a) with:

07-21-17

6-inch-wide yellow stripes

Replace *4-inch-wide yellow stripes* at each occurrence in section 84-2.04 with:

07-21-17

6-inch-wide yellow stripes

Add to the beginning of section 84-8.03A:

07-15-16

Select the method and equipment for constructing ground-in indentations.

Replace the 1st paragraph of section 84-8.03A with:

07-15-16

Do not construct rumble strips:

1. On structures, approach slabs, or concrete weigh-in-motion slabs
2. At intersections
3. Bordering two-way left turn lanes, driveways, or other high-volume turning areas
4. Within 6 inches of any concrete pavement joint

Add between the 2nd and 3rd paragraphs of section 84-8.03A:

07-15-16

Modify rumble strip spacing to avoid locating a groove on a concrete pavement joint.

Replace the 3rd paragraph of section 84-8.03A with:

07-15-16

Indentations must comply with the dimensions shown and not vary more than:

1. 10 percent in length
2. 0.06 inch in depth
3. 10 percent in width
4. 1 inch in center-to-center spacing between rumble strips

Add to the end of section 84-8.03A:

07-15-16

The noise level created by the combined grinding activities must not exceed 86 dBA when measured at a distance of 50 feet at right angles to the direction of travel.

Break rumble strips before and after intersections, driveways, railroad crossings, freeway gore areas, and freeway ramps. Place breaks and break distances as shown. You may adjust breaks and the break distances as needed at low-volume driveways or other locations if authorized.

07-15-16

Delete *new* in the 1st paragraph of section 84-8.03B.

07-15-16

Add to the end of section 84-8.03B:

Remove grinding residue under section 13-4.03E(7).

Replace the 1st paragraph of section 84-8.03C with:

07-15-16

Construct rumble strips in the top layer of HMA and asphalt concrete surfacing by the ground-in method.

Add between the 2nd and 3rd paragraphs of section 84-8.03C:

07-15-16

Dispose of the removed material.

07-15-16

Delete the 2nd paragraph of section 84-8.03C.

Replace *37-2* in the 3rd paragraph of section 84-8.03C with:

07-15-16

37-4.02

Replace section 84-8.04 with:

07-15-16

The payment quantity for any type of rumble strip is the length measured by the station along the length of the rumble strip without deductions for gaps between indentations.

Replace the 2nd paragraph of section 84-9.03B with:

04-15-16

Completely remove traffic stripes and pavement markings, including any paint in the gaps, by methods that do not remove pavement to a depth of more than 1/8 inch.

Add between the 2nd and 3rd paragraphs of section 84-9.03B:

04-15-16

Submit your proposed method for removing traffic stripes and pavement markings at least 7 days before starting the removal work. Allow 2 business days for the review.

Remove pavement marking such that the old message cannot be identified. Make any area removed by grinding rectangular. Water must not puddle in the ground areas. Fog seal ground areas on asphalt concrete pavement.

04-15-16

Delete *materially* in the 1st paragraph of section 84-9.03D.

Replace the list in the 1st paragraph of section 84-9.04 with:

07-21-17

1. 1.34 for a single 8-inch-wide traffic stripe
2. 2 for a double traffic stripe
3. 3 for a triple traffic stripe

^^

DIVISION X ELECTRICAL WORK

Replace section 86 with:

04-15-16

86 GENERAL

04-20-18

86-1.01 GENERAL

86-1.01A Summary

Section 86 includes general specifications for furnishing electrical equipment and materials.

Electrical equipment and materials must comply with part 4 of the *California MUTCD* and 8 CA Code of Regs, chapter 4, subchapter 5, "Electrical Safety Orders."

Galvanized equipment and materials must comply with section 75-1.02B.

86-1.01B Definitions

accessible pedestrian signal: Accessible pedestrian signal as defined in the *California MUTCD*.

accessible walk indication: Activated audible and vibrotactile action during the walk interval.

actuation: Actuation as defined in the *California MUTCD*.

ambient sound level: Background sound level in dB at a given location.

ambient sound sensing microphone: Microphone that measures the ambient sound level in dB and automatically adjusts the accessible pedestrian signal speaker's volume.

audible speech walk message: Audible prerecorded message that communicates to pedestrians which street has the walk interval.

channel: Discrete information path.

CALiPER: Commercially Available LED Product Evaluation and Reporting. A U.S. Department of Energy program that individually tests and provides unbiased information on the performance of commercially available LED luminaires and lights.

controller assembly: Assembly for controlling a system's operations, consisting of a controller unit and auxiliary equipment housed in a waterproof cabinet.

controller unit: Part of the controller assembly performing the basic timing and logic functions.

correlated color temperature: Absolute temperature in kelvin of a blackbody whose chromaticity most nearly resembles that of the light source.

detector: Detector as defined in the *California MUTCD*.

electrolier: Assembly of a lighting standard and luminaire.

07-21-17

fastening hardware [ICF1]: Bolts, nuts, washer, fasteners, hex nuts, lock nuts, or other metal components to secure or lock down a device or equipment.

04-15-16

flasher: Device for opening and closing signal circuits at a repetitive rate.

flashing beacon control assembly: Assembly of switches, circuit breakers, terminal blocks, flasher, wiring, and other necessary electrical components housed in a single enclosure for operating a beacon.

house side lumens: Lumens from a luminaire directed to light up areas between the fixture and the pole, such as sidewalks at intersection or areas off the shoulders on freeways.

illuminance gradient: Ratio of the minimum illuminance on a 1-foot square of sign panel to that on an adjacent 1-foot square of sign panel.

inductive loop detector: Detector capable of being actuated by an inductance change caused by a vehicle passing or standing over the loop. An inductive loop detector includes a loop or group of loops installed in the roadway and a lead-in cable installed and connected inside a controller cabinet.

junction temperature: Temperature of the electronic junction of the LED device. The junction temperature is critical in determining photometric performance, estimating operational life, and preventing catastrophic failure of the LED.

L70: Extrapolated life in hours of the luminaire when the luminous output depreciates 30 percent from the initial values.

lighting standard: Pole and mast arm supporting the luminaire.

04-20-18

link: Part of a system which provides a data connection between a transmitter and receiver.

04-15-16

LM-79: Test method from the Illumination Engineering Society of North America specifying the test conditions, measurements, and report format for testing solid state lighting devices, including LED luminaires.

LM-80: Test method from the Illumination Engineering Society of North America specifying the test conditions, measurements, and report format for testing and estimating the long-term performance of LEDs for general lighting purposes.

luminaire: Assembly that houses the light source and controls the light emitted from the light source.

04-20-18

mid-span access method: Procedure in which fibers from a single buffer tube are accessed and spliced to a multi buffer tube cable without cutting the unused fibers in the buffer tube, or disturbing the remaining buffer tubes in the cable.

04-15-16

National Voluntary Laboratory Accreditation Program: U.S. Department of Energy program that accredits independent testing laboratories.

04-20-18

optical time domain reflectometer (OTDR): Fiber optic test equipment that is used to measure the total amount of power loss between two points and over the corresponding distance. It provides a visual and printed display of the relative location of system components such as fiber sections, splices and connectors as well as the losses that are attributed to each component and or defects in the fiber.

07-21-17

pedestrian change interval: Pedestrian change interval as defined in the *California MUTCD*.

04-15-16

powder coating: Coating applied electrostatically using exterior-grade, UV-stable, polymer powder.

power factor: Ratio of the real power component to the complex power component.

04-20-18

power meter: A portable fiber optic test equipment that, when coupled with a light source, is used to perform end-to-end attenuation testing. Its display indicates the amount of power injected by the light source at the designed wavelength of the system under testing that arrives at the receiving end of the link.

04-15-16

pretimed controller assembly: Assembly operating traffic signals under a predetermined cycle length.

programming mechanism: Device to program the accessible pedestrian signal operation.

pull box: Box with a cover that is installed in an accessible place in a conduit run to facilitate the pulling in of wires or cables.

push button information message: Push button information message as defined in the *California MUTCD.*

push button locator tone: Push button locator tone as defined in the *California MUTCD*.

04-20-18

segment: A continuous cable terminated by 2 splices, 2 connectors or 1 splice and 1 connector.

04-15-16

signal face: Signal face as defined in the *California MUTCD*.

signal head: Signal head as defined in the *California MUTCD*.

signal indication: Signal indication as defined in the *California MUTCD*.

signal section: Signal section as defined in the *California MUTCD*.

signal standard: Pole with or without mast arms carrying 1 or more signal faces.

street side lumens: Lumens from a luminaire directed to light up areas between the fixture and the roadway, such as traveled ways and freeway lanes.

surge protection device: Subsystem or component that protects equipment against short-duration voltage transients in power line.

total harmonic distortion: Ratio of the rms value of the sum of the squared individual harmonic amplitudes to the rms value of the fundamental frequency of a complex waveform.

traffic-actuated controller assembly: Assembly for operating traffic signals under the varying demands of traffic as registered by detector actuation.

traffic phase: Traffic phase as defined in the *California MUTCD*.

vehicle: Vehicle as defined in the *California Vehicle Code*.

vibrotactile pedestrian device: Vibrotactile pedestrian device as defined in the *California MUTCD*.

86-1.01C Submittals

86-1.01C(1) General

Within 15 days after Contract approval, submit a list of equipment and materials you propose to install.

Submit the list before shipping equipment and materials to the job site. The list must include:

1. Manufacturer's name
2. Make and model number
3. Month and year of manufacture
4. Lot and serial numbers
5. Contract number
6. Your contact information

Submit confirmation of the vendor's acceptance of the order for the electrical equipment and materials as an informational submittal.

Submit 3 sets of computer-generated, schematic wiring diagrams for each cabinet.

Diagrams, plans, and drawings must be prepared using graphic symbols in IEEE 315, "Graphic Symbols for Electrical and Electronic Diagrams."

Submit a schedule of values within 15 days after Contract approval.

Do not include costs for the traffic control system in the schedule of values.

Submit a manufacturer's maintenance manual or combined maintenance and operation manual as an informational submittal. The manual must have a master item index that includes:

1. Specifications
2. Design characteristics
3. General operation theory
4. Function of all controls
5. Troubleshooting procedure
6. Parts list, descriptions, stock numbers, and settings
7. Block circuit diagram
8. Layout of components
9. Schematic diagrams

04-20-18

Submit a digital file for geographic information system mapping for:

1. Conduit
2. Pull Boxes
3. Cabinets
4. Enclosures

The digital file must consist of:

1. Longitudinal and latitude coordinates, in accordance with the WGS84 reference coordinate system. The coordinates must be in decimal format having 6 significant figures after the decimal point. Coordinates must be read at the center of pull boxes, cabinet and enclosures; and on top of conduit at 200 foot intervals before backfill.
2. Type, depth and size for conduits.
3. Type for pull boxes, cabinets and enclosures.

04-15-16

86-1.01C(2) Pull Boxes

Submit the manufacturer's installation instructions for pull boxes, including:

1. Quantity and size of entries that can be made without degrading the strength of the pull box below the load rating
2. Locations where side entries can be made
3. Acceptable method for creating the entry

07-21-17

Submit load-rating test reports for pull boxes from a laboratory that is accredited to International Standards Organization/International Electrotechnical Commission 17025 by the American Association for Laboratory Accreditation (A2LA) or the ANSI-ASQ National Accreditation Board (ANAB).

04-15-16

86-1.01C(3) LED Luminaires

Submit for an LED luminaire:

1. Maximum power in watts
2. Maximum designed junction temperature
3. Heat sink area in square inches
4. Designed junction-to-ambient thermal resistance calculation with thermal resistance components clearly defined
5. L70 in hours when extrapolated for the average nighttime operating temperature
6. Life expectancy based on the junction temperature
7. Manufacturer's data sheet for the power supply, including the rated life

Submit the manufacturer's QC test data for LED luminaires as an informational submittal.

86-1.01C(4) Low-Pressure Sodium Luminaires

Submit the manufacturer's QC test data for low-pressure sodium luminaires as an informational submittal.

86-1.01C(5) Service Equipment Enclosures

Submit shop drawings for a service equipment enclosure to METS.

86-1.01C(6) Signal Heads

Submit a certificate of compliance and the manufacturer's QC test data for signal heads as an informational submittal.

86-1.01C(7) LED Signal Modules

Submit the manufacturer's QC test data for LED signal modules as an informational submittal.

86-1.01C(8) Visors

Submit a certificate of compliance and the manufacturer's QC test data for visors as an informational submittal.

86-1.01C(9) LED Countdown Pedestrian Signal Face Modules

Submit the manufacturer's QC test data for LED countdown pedestrian signal face modules as an informational submittal.

86-1.01C(10) Accessible Pedestrian Signals

Submit the manufacturer's QC test data for accessible pedestrian signals as an informational submittal.

86-1.01D Quality Assurance

86-1.01D(1) General

Electrical equipment must comply with one or more of the following standards:

1. ANSI
2. ASTM
3. EIA/ECIA
4. NEMA
5. NETA
6. UL/NRTL
7. TIA

Materials must comply with:

1. FCC rules
2. ITE standards
3. NEC
4. California Electrical Code

86-1.01D(2) Source Quality Control

Service equipment enclosures and cabinets must be inspected and tested at the source.

86-1.01D(3) Department Acceptance

Deliver material and equipment for testing to METS.

Allow 30 days for testing. The Department notifies you when testing is complete.

If the Department accepts the material or equipment, you must pick it up from the test site and deliver it to the job site.

If the Department rejects material or equipment, remove it within 5 business days after you are notified it is rejected. If it is not removed within that period, the Department may remove it and ship it to you and deduct the costs of labor, material and shipping.

Resubmit a new sample and allow 30 days for retesting. The retesting period starts when the replacement material or equipment is delivered to METS.

86-1.02 MATERIALS

86-1.02A General

Anchor bolts, anchor bars or studs, and nuts and washers must comply with section 75-1.02.

Bolt threads must accept galvanized standard nuts without requiring tools or causing removal of protective coatings.

86-1.02B Conduit and Accessories

86-1.02B(1) General

Conduit and fittings must comply with the requirements shown in the following table:

Conduit and Fitting Requirements

Type	Requirement
1	Must be hot-dip galvanized rigid steel complying with UL 6 and ANSI C80.1. The zinc coating must comply with copper sulfate test requirements in UL 6. Fittings must be electrogalvanized and certified under UL 514B.
2	Must comply with requirements for Type 1 conduit and be coated with PVC or polyethylene. The exterior thermoplastic coating must have a minimum thickness of 35 mils. The internal coating must have a minimum thickness of 2 mils. Coated conduit must comply with NEMA RN 1, or NRTL PVC-001.
3	Must be Type A, extruded, rigid PVC conduit complying with UL 651 or must be HDPE conduit complying with UL 651A.
4	Must have an inner, flexible metal core covered by a waterproof, nonmetallic, sunlight-resistant jacket, and must be UL listed for use as a grounding conductor. Fittings must be certified under UL 514B.
5	Must be intermediate steel complying with UL 1242 and ANSI C80.6. The zinc coating must comply with copper sulfate test requirements specified in UL 1242. Fittings must be electrogalvanized and certified under UL 514B.

Bonding bushings installed on metal conduit must be insulated and either a galvanized or zinc-alloy type.

04-20-18

Conduit used for horizontal directional drilling must be high density polyethylene Type IPS, DR 9 and comply with ASTM F714. The conduit material must comply with ASTM D3350.

Conduit for fiber optic cable systems must be high density polyethylene schedule 40 high density polyethylene, complying with NEMA TC-7, except for horizontal directional drilling.

Sealing plug must:

1. Be reusable
2. Withstand a pressure of 5 psi
3. Provide an airtight seal
4. Seal conduit and innerducts simultaneously

Sealing plug for empty conduit must have a rope tie.

Innerduct must be:

1. HDPE tubing or fabric mesh pouch.
2. Nominal 1 inch inside diameter, with a minimum Standard Dimension Ratio (SDR) rating of 11
3. Continuous without splices or joints.
4. Ribbed inside and outside when used inside a conduit.
5. Ribbed inside and smooth on the outside for direct burial.
6. Unique color throughout the entire length of the conduit segment.
7. Shipped and stored on a reel, covered to protect colors from UV deterioration. The reel must be marked with:
   - 7.1. Manufacturer's name
   - 7.2. Contract number
   - 7.3. Size and length of the innerduct

Polyethylene for innerduct must:

1. Comply with ASTM D3485, D3035, D2239, and D2447, and NEMA TC7 and TC2
2. Have a tensile yield strength of a minimum 3300 psi under ASTM D638
3. Have a density of 59.6187 lb/ft3 ± 0.3121 lb/in3 under ASTM D1505

Tracer wire must be a minimum No. 12 solid copper conductor with orange insulation Type TW, THW, RHW, or USE.

04-15-16

86-1.02B(2) Structures Accessories

Steel hangers, steel brackets, and other fittings used to support conduit in or on a wall or bridge superstructure must comply with section 75-3.

Precast concrete cradles for conduit must be made of minor concrete and commercial-quality welded wire fabric. The minor concrete must contain a minimum of 590 lb of cementitious material per cubic yard. The cradles must be moist cured for a minimum of 3 days.

86-1.02C Pull Boxes

86-1.02C(1) General

07-21-17

A pull box cover must have a nonskid surface.

A metal pull box cover must include a fitting for a bonding conductor.

A pull box cover must have a marking on the top that is:

1. Clearly defined
2. Uniform in depth
3. Parallel to the longer side
4. From 1 to 3 inches in height

The cover marking must include CALTRANS and one of the following:

1. *SERVICE* for service circuits between a service point and service disconnect
2. *SERVICE IRRIGATION* for circuits from a service equipment enclosure to an irrigation controller
3. SERVICE BOOSTER PUMP for circuits from a service equipment enclosure to the booster pump
4. *TDC POWER* for circuits from a service equipment enclosure to telephone demarcation cabinet
5. *LIGHTING* for a lighting system
6. *SIGN ILLUMINATION* for a sign illumination system
7. *SIGNAL AND LIGHTING* for a signal and lighting system
8. *RAMP METER* for a ramp metering system
9. *TMS* for a traffic monitoring station
10. *FLASHING BEACON* for a flashing beacon system
11. *CMS* for a changeable message sign system
12. *INTERCONNECT* for an interconnect conduit and cable system
13. *CALTRANS* if more than one system is shared in the same pull box

The following circuits must not include CALTRANS in the cover marking:

1. Electrical service
2. Sprinkler-control
3. Telephone service

The load rating must be:

1. Stenciled or stamped on the inside and outside of the pull box
2. Stamped on the outside of the cover

If a transformer or other device must be placed in the pull box, include recesses for a hanger.

The hardware must be stainless steel containing 18 percent chromium and 8 percent nickel.

04-15-16

86-1.02C(2) Nontraffic Pull Boxes

A nontraffic pull box and cover must comply with ANSI/SCTE 77, "Specification for Underground Enclosure Integrity," for Tier 22 load rating and must be gray or brown.

07-21-17

The cover markings must be cast in the mold of the cover or be engraved on a metal or UV resistant ABS plate secured in the cover with stainless steel screws.

04-15-16

Each new pull box must have a cover with an electronic marker cast inside.

A pull box extension must be made of the same material as the pull box. The extension may be another pull box if the bottom edge of the pull box fits into the opening for the cover.

07-21-17

The bolts, nuts, and washers must be a captive design. Captive bolts for securing the cover of nontraffic pull boxes must be capable of withstanding a torque from 55 to 60 ft-lb and a minimum pull-out strength of 750 lb.

04-15-16

86-1.02C(3) Traffic Pull Boxes

07-21-17

A traffic pull box and cover must comply with AASHTO HS20-44 and AASHTO M 306.

The frame must be anchored to the box.

04-15-16

Nuts must be vibration-resistant, zinc-plated, carbon steel and have a wedge ramp at the root of the thread.

07-21-17

For a cast iron cover or before galvanizing a steel cover, the manufacturer must apply the cover marking by one of the following methods:

1. Use a cast iron strip at least 1/4 inch thick with letters raised a minimum of 1/16 inch. Fasten the strip to the cover with 1/4-inch, flathead, stainless steel machine bolts and nuts. Peen the bolts after tightening.
2. Use a sheet steel strip at least 0.027 inch thick with letters raised a minimum of 1/16 inch. Fasten the strip to the cover by spot welding, tack welding, or brazing with 1/4-inch stainless steel rivets or 1/4-inch, roundhead, stainless steel machine bolts and nuts. Peen the bolts after tightening.
3. Bead weld the letters on the cover such that the letters are raised a minimum of 3/32 inch.
4. Cast the logo into the cast iron cover.

The steel cover must:

1. Be countersunk approximately 1/4 inch to accommodate the bolt head. When tightened, the hold down bolt head must be no more than 1/8 inch above the top of the cover.
2. Have slot holes for lifting with a guard under the cover to prevent entry of more than 3 inches below the bottom surface of the cover without deflection to protect the pull box contents.

04-20-18

Hold-down bolts must be a Penta Head 1/2-13UNC and must have a thread lock material.

07-21-17

86-1.02C(4) Tamper Resistant Pull Boxes

04-20-18

86-1.02C(4)(a) General

Not Used

86-1.02C(4)(b) Tamper-Resistant Nontraffic Pull Box

A tamper resistant nontraffic pull box must include a pull box with one of the following:

1. Anchored cover
2. Lockable cover
3. Pull box insert

86-1.02C(4)(c) Tamper Resistant Traffic Pull Box

A tamper resistant traffic pull box must include a pull box with an anchored cover.

86-1.02C(4)(d) Anchored Cover

The anchored cover must:

1. Be of 1/2-inch-thick mild steel, hot dip galvanized, post fabrication.
2. Be hot dip galvanized after manufacturing with spikes removed from the galvanized surfaces.
3. Have a center space for a top lock nut that must be torqued to 200 ft-lb.
4. Have a center opening for a stainless steel threaded cap to cover the lock nut.
5. Weigh a minimum of 85 lb.
6. Include an all-around security skirt of 1/4-inch thick steel. The skirt must be sized to encase a nontraffic pull box or sized to fit within a traffic pull box.
7. Be welded to the skirt.

86-1.02C(4)(e) Lockable Cover

The lockable cover must:

1. Be manufactured from minimum 3/16-inch-thick galvanized steel or a polymer of minimum strength equal to 3/16 inch steel
2. Be secured to the pull box with a locking mechanism of equal or greater strength than the manufactured material
3. Have 1/2-by-2-inch slot holes for lifting
4. Have dimensions complying with one of the following:
   - 4.1. Department's standards for pull covers as shown if the lockable cover is secured to the inside lip of the pull
   - 4.2. Department's standards for LO and WO for the length and width as shown for pull box covers if the lockable cover is secured to the top of the pull box

86-1.02C(4)(f) Pull Box Insert

The pull box insert must:

1. Be made of minimum 3/16-inch-thick or 10 gauge mild hot-dipped galvanized steel
2. Have a minimum of 2 mounting brackets that rest under the side or end wall
3. Be lockable with a padlock having a minimum 3/8-inch shackle
4. Have dimensions complying with the Department's standards for LI and WI for the length and width as shown for pull box covers

04-15-16

86-1.02D Tapes

86-1.02D(1) General

Reserved

86-1.02D(2) Pull Tape

Pull tape must be a flat, woven, lubricated, soft-fiber, polyester tape with a minimum tensile strength of 1,800 lb. The tape must have sequential measurement markings every 3 feet.

04-20-18

86-1.02D(3) Warning Tape

Warning tape must comply with requirements shown in the following table:

Warning Tape Requirements

Description	Parameters
Thickness	Minimum 4 mil
Width	4 inches
Material	Orange color polyolefin film
Tensile strength of material	Minimum of 2800 psi
Elongation	Minimum of 500 percent elongation before breakage
Printed message content	CAUTION: CALTRANS FACILITIES BELOW
Printed message text height and color	1 inch, black color text over bright orange background
Message spacing intervals	3 feet

Warning tape must be water and corrosion resistant.

07-21-17

86-1.02E Piezoelectric Axle Sensors

04-20-18

Piezoelectric axle sensors must be Class II and must be for vehicle classification purposes.

Each sensor must:

1. Be 1/4 inch wide by 6 feet long by 1/16 inch thick.
2. Have a screen transmission cable attached. The screened transmission cable must be RG-58C/U coaxial cable, jacketed with high-density polyethylene, rated for direct burial and resistant to nicks and cuts.
3. Operate over a temperature range from -40 to 160 degrees F.
4. Have a signal to noise ratio equal to or greater than 10 to 1.
5. Have an output uniformity range of plus or minus 20 percent.
6. Have an output signal of a minimum 250 mV for a wheel load of 400 lb at 55 mph and 70 degrees F.
7. Have an insulation resistance greater than 500 MΩ.
8. Have a life cycle of a minimum 25 million equivalent single axle loadings.

04-20-18

86-1.02F Conductors and Cables

86-1.02F(1) General

Conductors and cables must be clearly and permanently marked the entire length of their outer surface with:

1. Manufacturer's name or trademark
2. Insulation-type letter designation
3. Conductor size
4. Voltage
5. Temperature rating
6. Number of conductors for a cable

The minimum insulation thickness and color code requirements must comply with NEC.

86-1.02F(2) Conductors

86-1.02F(2)(a) General

A conductor must be UL listed or NRTL certified and rated for 600 V(ac).

Conductors must be identified as shown in the following table:

Conductor Identification

Circuit	Signal phase or function	Identification			Copper Size
		Insulation color		Band symbols	
		Base	Stripe[a]		

Signals (vehicle)[a, b]	2, 6	Red, yellow, brown	Black	2, 6	14
	4, 8	Red, yellow, brown	Orange	4, 8	14
	1, 5	Red, yellow, brown	None	1, 5	14
	3, 7	Red, yellow, brown	Purple	3, 7	14
	Ramp meter 1	Red, yellow, brown	None	No band required	14
	Ramp meter 2	Red, yellow, brown	Black	No band required	14
Pedestrian signals	2p, 6p	Red, brown	Black	2p, 6p	14
	4p, 8p	Red, brown	Orange	4p, 8p	14
	1p, 5p	Red, brown	None	1p, 5p	14
	3p, 7p	Red, brown	Purple	3p, 7p	14
Push button assembly or accessible pedestrian signal	2p, 6p	Blue	Black	P-2, P-6	14
	4p, 8p	Blue	Orange	P-4, P-8	14
	1p, 5p	Blue	None	P-1, P-5	14
	3p, 7p	Blue	Purple	P-3, P-7	14
Traffic signal controller cabinet	Ungrounded circuit conductor	Black	None	CON-1	6
	Grounded circuit conductor	White	None	CON-2	6
Highway lighting pull box to luminaire	Ungrounded - line 1	Black	None	No band required	14
	Ungrounded - line 2	Red	None	No band required	14
	Grounded	White	None	No band required	14
Multiple highway lighting	Ungrounded - line 1	Black	None	ML1	10
	Ungrounded - line 2	Red	None	ML2	10
Lighting control	Ungrounded - Photoelectric unit	Black	None	C1	14
	Switching leg from Photoelectric unit or SM transformer	Red	None	C2	14
Service	Ungrounded - line 1 (signals)	Black	None	No band required	6
	Ungrounded - line 2 (lighting)	Red	None	No band required	8
Sign lighting	Ungrounded - line 1	Black	None	SL-1	10
	Ungrounded - line 2	Red	None	SL-2	10
Flashing beacons	Ungrounded between flasher and beacons	Red or yellow	None	F-Loc.[c]	14
Grounded circuit conductor	Push button assembly or accessible pedestrian signal	White	Black	No band required	14
	Signals and multiple lighting	White	None	No band required	10
	Flashing beacons and sign lighting	White	None	No band required	12
	Lighting control	White	None	C-3	14
	Service	White	None	No band required	14
Railroad		Black	None	R	14

preemption					
Spares		Black	None	No band required	14

Notes:
[a]On overlaps, the insulation is striped for the 1st phase in the designation, e.g., phase (2+3) conductor is striped as for phase 2.
[b]Band for overlap and special phases as required
[c]Flashing beacons having separate service do not require banding.

The insulation color must be homogeneous throughout the full depth of the insulation. The identification stripe must be continuous throughout the length of the conductor.

Conductors size no. 8 to size no. 2 must be aluminum except for bonding jumpers and equipment grounding conductors.

86-1.02F(2)(b) Aluminum Conductors

Aluminum conductors must comply with ASTM B800 and 801.

Insulation for aluminum conductors must be one of the following:

1. Type XHHW-2
2. Type USE, RHH, or RHW cross-linked polyethylene

86-1.02F(2)(c) Copper Conductors

86-1.02F(2)(c)(i) General

Copper wire must comply with ASTM B3 and B8.

Insulation for no. 14 to no. 4 conductors must be one of the following:

1. Type TW PVC under ASTM D2219
2. Type THW PVC
3. Type USE, RHH, or RHW cross-linked polyethylene

The insulation for no. 2 and larger conductors must be one of the above or THWN.

86-1.02F(2)(c)(ii) Bonding Jumpers and Equipment Grounding Conductors

A bonding jumper must be copper wire or copper braid of the same cross-sectional area as a no. 8 conductor or larger.

An equipment grounding conductor may be bare or insulated.

86-1.02F(2)(c)(iii) Inductive Loop Conductors

An inductive loop conductor must comply with the requirements shown in the following table:

Conductor Requirements for Inductive Loop Detectors

Loop wire	Requirement
Type 1	Type RHW-USE neoprene-jacketed or Type USE cross-linked polyethylene, insulated, no. 12, stranded copper wire with a minimum 40-mils insulation thickness at any point.
Type 2	Type THWN or Type XHHW, no. 14, stranded copper wire in a plastic tubing. The plastic tubing must be polyethylene or vinyl rated for use at 105 degrees C and resistant to oil and gasoline. The outside diameter of the tubing must be at most 0.27 inch with a wall thickness of at least 0.028 inch.

86-1.02F(2)(d) Reserved

86-1.02F(3) Cables

86-1.02F(3)(a) General

Not Used

86-1.02F(3)(b) Aluminum Cables

86-1.02F(3)(b)(i) General

Not Used

86-1.02F(3)(b)(ii) Direct Burial Cables

Direct burial cable must be aluminum.

The direct burial aluminum cable must:

1. Be a metal-clad type
2. Be UL listed or NRTL certified for direct burial and concrete encasement
3. Include conductors rated for 90 degrees C
4. Have a galvanized steel or aluminum interlocking metal tape sheath with PVC jacket
5. Have a minimum no. 6 AWG aluminum or copper-clad aluminum equipment grounding conductor

86-1.02F(3)(c) Reserved

86-1.02F(3)(d) Copper Cables

86-1.02F(3)(d)(i) General

Not Used

86-1.02F(3)(d)(ii) Conductor Signal Cables

A conductor signal cable must have a black polyethylene jacket with an inner polyester binder sheath. The cable jacket must be rated for 600 V(ac) and 75 degrees C. Filler material, if used, must be polyethylene.

The individual conductors in the cable must be solid copper complying with ASTM B286 with Type THWN insulation. The minimum thickness of insulation must comply with NEC for conductor sizes no. 14 to no.10. The minimum thickness of the nylon jacket must be 4 mils.

Cable must comply with the requirements shown in the following table:

Cable typea	Conductor quantity and type	Cable jacket thickness (mils)		Maximum nominal outside diameter (inch)	Conductor color code
		Average	Minimum		

3CSC	3 no. 14	44	36	0.40	Blue/black, blue/orange, white/black stripe
5CSC	5 no. 14	44	36	0.50	Red, yellow, brown, black, white
9CSC	8 no. 14 1 no. 12	60	48	0.65	No. 12 - white, no. 14 - red, yellow, brown, black, and red/black, yellow/black, brown/black, white/black stripe
12CSC	11 no. 14 1 no. 12	60	48	0.80	No. 12 - white, no. 14 - red, yellow, brown, red/black stripe, yellow/black stripe, brown/black stripe, black/red stripe, black/white stripe, black, red/white stripe, brown/white stripe
28CSC	27 no. 14 1 no. 10	80	64	0.90	No. 10 - white no. 14 - red/black stripe, yellow/black stripe, brown/black stripe, red/orange stripe, yellow/orange stripe, brown/orange stripe, red/silver stripe, yellow/silver stripe, brown/silver stripe, red/purple stripe, yellow/purple stripe, brown/purple stripe, red/2 black stripes, brown/2 black stripes, red/2 orange stripes, brown/2 orange stripes, red/2 silver stripes, brown/2 silver stripes, red/2 purple stripes, brown/2 purple stripes, blue/black stripe, blue/orange stripe, blue/silver stripe, blue/purple stripe, white/black stripe, black/red stripe, black

86-1.02F(3)(d)(iii) Detector Lead-in Cables

Conductors for a loop detector lead-in cable must be two no. 16, 19-by-29, stranded, tinned copper wires with calculated cross-sectional areas complying with ASTM B286, Table 1 and the requirements shown in the following table:

Conductor Requirements for Loop Detector Lead-In Cables

Lead-in cable	Requirement
Type B	Insulated with 20 mils of high-density polyethylene. Conductors must be twisted together with at least 2 turns per foot, and the twisted pair must be protected with a copper or aluminum polyester shield. A minimum no. 20 copper drain wire must be connected to the equipment ground within the cabinet. Cable must have a high-density polyethylene or high-density polypropylene outer jacket with a nominal thickness of 32 mils. Include an amorphous, interior, moisture penetration barrier of nonhydroscopic polyethylene or polypropylene fillers.
Type C	Comply with International Municipal Signal Association Specification no. 50-2. A minimum no. 20 copper drain wire must be connected to the equipment ground within the cabinet.

86-1.02F(3)(d)(iv) Reserved

86-1.02F(3)(d)(v) Signal Interconnect Cables

A signal interconnect cable must be a 6-pair type with stranded, tinned, copper no. 20 conductors. The insulation for each conductor must be color-coded polypropylene with a minimum 13-mils nominal thickness. The conductors must be in color-coded, twisted pairs. Each pair must be wrapped with an aluminum polyester shield and have a no. 22 or larger, stranded, tinned, copper drain wire inside the shielded pair.

The cable jacket must be black HDPE rated for a minimum of 300 V(ac) and 60 degrees C. The jacket must have a minimum nominal wall thickness of 40 mils.

86-1.02F(3)(d)(vi) Communication Cables

86-1.02F(3)(d)(vi)(a) General

Not Used

86-1.02F(3)(d)(vi)(b) Category 5E Cables

A category 5E cable must be a 4-pair, unshielded, outdoor rated, nongel-filled type and comply with ANSI/TIA/EIA 568-B.

86-1.02F(3)(d)(vi)(c) Category 6 Cables

A category 6 cable must be a 4-pair, unshielded, outdoor rated, nongel-filled type and comply with ANSI/TIA/EIA 568-C.

86-1.02F(3)(d)(vi)(d) Telephone Cables

A telephone cable must be a 6-pair type with solid, tinned, copper no. 22 conductors and comply with RUS Bulletin 1735F-205 (PE-39).

07-21-17

86-1.02G Equipment Identification Characters

Equipment identification characters must be 2-1/2 inch, series D lettering, except on wood poles, they must be 3-inch lettering.

The characters must be self-adhesive reflective labels or paint, except on wood poles, they must be embossed on aluminum.

04-20-18

Labels must have a white back ground, all black capital characters, and must extend beyond the character by a minimum of 1/4 inch.

07-21-17

86-1.02H Splicing Materials

Splicing materials include:

1. Connectors
2. Electrical insulating coating

3. PVC electrical tape
4. Butyl rubber stretchable tape
5. PVC pressure-sensitive adhesive tape
6. Heat shrink tubing

Connectors must be C-shaped compression or butt type.

Electrical insulating coating must be a fast drying sealant with low nontoxic fumes.

PVC electrical tape must have a minimum thickness of 80 mils.

Butyl rubber stretchable tape with liner must have a minimum thickness of 120 mils.

PVC pressure-sensitive adhesive electrical tape must have a minimum thickness of 6 mils.

Electrical tapes must be self-fusing, oil- and flame-resistant, synthetic rubber and be UL listed or NRTL certified.

Heat-shrink tubing must be made of irradiated polyolefin tubing with a minimum wall thickness of 40 mils before contraction and an adhesive mastic inner wall. When heated, the inner wall must melt and fill the crevices and interstices of the covered splice area and the outer wall must shrink to form a waterproof insulation.

Heat-shrink tubing must comply with the requirements for extruded, insulating tubing at 600 V(ac) specified in UL Standard 468D and ANSI C119.1 and the requirements shown in the following table:

Heat-Shrink Tubing Requirements

Quality characteristic	Requirement
Shrinkage ratio of supplied diameter[a] (max, %)	33
Dielectric strength (min, kV/in)	350
Resistivity (min, Ω/in)	25×10^{13}
Tensile strength (min, psi)	2,000
Operating temperature (°C)	-40–90 (135 °C in emergency)
Water absorption (max, %)	0.5

[a]When heated to 125 °C and allowed to cool to 25 °C

04-20-18

86-1.02I Connectors and Terminals

Copper connectors must comply with UL-486A.

Aluminum connector must comply with UL-486 B.

Connectors and terminals must be rated for the conductors' size and material type and be prefilled with oxide-inhibiting compound.

Connectors and terminals for copper conductors must be a compression or crimp type.

Connectors and terminals for aluminum conductors must be a compression type.

07-21-17

86-1.02J Standards, Poles, Pedestals, and Posts

Standards for signals, lighting, and flashing beacons, poles for closed circuit television, pedestals for cabinets, posts for extinguishable message sign and posts for pedestrian push button assemblies must comply with section 56-3.

86-1.02K Luminaires

86-1.02K(1) General

Luminaire must be either LED or low-pressure-sodium type.

86-1.02K(2) LED Luminaires

LED luminaire must be on the Authorized Material List for LED luminaires and must:

1. Be self-contained, not requiring assembly.
2. Comply with UL 1598 for luminaires in wet locations.
3. Have a power supply with:
   3.1. ANSI/IEC rating of at least IP65.
   3.2. 2 leads to accept standard 0-10 V(dc).
   3.3. Dimming control compatible with IEC 60929, Annex E. If the control leads are open or the analog control signal is lost, the circuit must default to 100-percent power.
   3.4. Case temperature self rise of 77 degrees F or less above ambient temperature in free air with no additional heat sinks.
4. Weigh no more than 35 lb.
5. Have a minimum operating life of 63,000 hours when operated for an average time of 11.5 hours at an average temperature of 70 degrees F.
6. Be designed to operate over a temperature range from -40 to 130 degrees F.
7. Be operationally compatible with photoelectric controls.
8. Have a correlated color temperature range from 3,500 to 6,500 K and a color rendering index of 65 or greater.
9. Have a maximum-effective projected area of 1.4 sq ft when viewed from either side or end.
10. Have a housing color that matches a color no. 26152 to 26440, 36231 to 36375, or 36440 of FED-STD-595.
11. Have an ANSI C136.41-compliant, locking-type, photocontrol receptacle with dimming connections and a watertight shorting cap.
12. Comply with LM-79, LM-80 and California Test 611.

The individual LEDs must be connected such that a catastrophic loss or a failure of 1 LED does not result in the loss of more than 20 percent of the luminous output of the luminaire.

The luminaire must be permanently marked inside the unit and outside of its packaging box. Marking consists of:

1. Manufacturer's name or trademark
2. Month and year of manufacture
3. Model, serial, and lot numbers
4. Rated voltage, wattage, and power in VA

An LED luminaire's onboard circuitry must include a surge protection device to withstand high-repetition noise transients caused by utility line switching, nearby lightning strikes, and other interferences. The device must protect the luminaire from damage and failure due to transient voltages and currents as defined in Tables 1 and 4 of ANSI/IEEE C64.41.2 for location category C-High. The surge protection device must comply with UL 1449 and ANSI/IEEE C62.45 based on ANSI/IEEE C62.41.2 definitions for standard and optional waveforms for location category C-High.

An LED luminaire and its associated onboard circuitry must comply with the Class A emission limits under 47 CFR 15(B) for the emission of electronic noise.

The fluctuations of line voltage must have no visible effect on the luminous output.

The operating voltage may range from 120 to 480 V(ac), 60 ± 3 Hz. Luminaire must operate over the entire voltage range or the voltage range must be selected from one of the following:

1. Luminaire must operate over a voltage range from 95 to 277 V(ac). The operating voltages for this option are 120 V(ac) and 240 V(ac).
2. Luminaire must operate over a voltage range from 347 to 480 V(ac). The operating voltage for this option is 480 V(ac).

LED luminaire must have a power factor of 0.90 or greater. The total harmonic distortion, current, and voltage induced into a power line by a luminaire must not exceed 20 percent. The L70 of the luminaire must be the minimum operating life or greater. Illuminance measurements must be calibrated to standard photopic calibrations.

The maximum power consumption and maintained illuminance of the LED luminaires must comply with the isofootcandle curves as shown.

LED luminaire must not allow more than 10 percent of the rated lumens to project above 80 degrees from vertical and 2.5 percent of the rated lumens to project above 90 degrees from vertical.

Luminaire must have passive thermal management with enough capacity to ensure proper heat dissipation and functioning of the luminaire over its minimum operating life. The maximum junction temperature for the minimum operating life must not exceed 221 degrees F.

The junction-to-ambient thermal resistance must be 95 degrees F per watt or less. The use of fans or other mechanical devices is not allowed for cooling the luminaire. The heat sink must be made of aluminum or other material of equal or lower thermal resistance. The luminaire must contain circuitry that automatically reduces the power to the LEDs so the maximum junction temperature is not exceeded when the ambient temperature is 100 degrees F or greater.

The luminaire's housing must be fabricated from materials designed to withstand a 3,000-hour salt spray test under ASTM B117. All aluminum used in housings and brackets must be made of a marine-grade alloy with less than 0.2 percent copper. All exposed aluminum must be anodized. A chromate conversion undercoating must be used underneath a thermoplastic polyester powder coat.

The housing must be designed to prevent the buildup of water on its top surface. Exposed heat sink fins must be oriented to allow water to run off the luminaire and carry dust and other accumulated debris away from the unit. The optical assembly of the luminaire must be protected against dust and moisture intrusion to at least an UL 60529 rating of IP66. The power supply enclosure must be protected to at least an UL 60529 rating of IP43.

The housing must have a slip fitter capable of being mounted on a 2-inch-diameter pipe tenon. Slip fitter must:

1. Fit on mast arms with outside diameters from 1-5/8 to 2-3/8 inches
2. Be adjustable to a minimum of ±5 degrees from the axis of the tenon in a minimum of 5 steps: +5, +2.5, 0, -2.5, -5
3. Have clamping brackets that:
    3.1. Are made of corrosion-resistant materials or treated to prevent galvanic reactions
    3.2. Do not bottom out on the housing bosses when adjusted within the designed angular range
    3.3. Do not permanently set in excess of 1/32 inch when tightened

Each refractor or lens must be made of UV-inhibiting high-impact plastic, such as acrylic or polycarbonate, or heat- and impact-resistant glass. The refractor or lens must be resistant to scratching. Polymeric materials, except for the lenses of enclosures containing either the power supply or electronic components of the luminaire, must be made of UL94 V-0 flame-retardant materials.

An LED luminaire and its internal components must be able to withstand mechanical shock and vibration.

If the components are mounted on a down-opening door, the door must be hinged and secured to the luminaire's housing separately from the refractor or flat lens frame. The door must be secured to the housing to prevent accidental opening. A safety cable must mechanically connect the door to the housing.

An LED luminaire must have a barrier-type terminal block secured to the housing to connect field wires. The terminal screws must be captive and equipped with wire grips for conductors up to no. 6.

The conductors and terminals must be identified and marked.

86-1.02K(3) Low-Pressure Sodium Luminaires

A low-pressure sodium luminaire must be an enclosed cutoff or semi-cutoff type and be self-contained, not requiring assembly.

The housing must be either (1) a minimum 1/16-inch-thick, corrosion-resistant, die-cast aluminum sheet and plate with concealed continuous welds or (2) a minimum 3/32-inch-thick, acrylonitrile-butadiene-styrene sheet material on a cast aluminum frame. The housing must provide mounting for all electrical components and a slip fitter. The housing must be divided into optical and power compartments that are individually accessible for service and maintenance.

The painted exterior surface of the luminaire must be finished with a fused coating of electrostatically applied polyester powder paint or other UV-inhibiting film. The color must be aluminum gray.

A sealing ring must be installed in the pipe tenon opening to prevent the entry of water and insects into the power and optical compartments. The ring must be made of high-temperature neoprene or equal material.

The power unit assembly must be accessible through a weather-tight, hinged cover secured to the housing with spring latches or captive screws.

The luminaire's hardware must be stainless steel or cadmium plated. Removable components must be secured with machine screws or bolts instead of sheet metal screws.

A semi-cutoff luminaire or a molded refractor-style cutoff luminaire must include a refractor. Other cutoff luminaires must include a flat lens. The refractor assembly and flat lens assembly must be designed to rigidly maintain their shape and be hinged and secured to the housing with spring latches.

The refractor must be either a 1-piece injection-molded polycarbonate with a minimum thickness of 3/32 inch or a 1-piece injection-molded acrylic with a minimum thickness of 1/8 inch. Alternate methods of manufacturing the refractor may be authorized provided minimum specified thicknesses are maintained.

The flat lens must be a 1-piece polycarbonate with a minimum thickness of 3/32 inch, mounted to a metal frame.

The lamp socket must be made of high-temperature, flame-retardant, thermoset material with self-wiping contacts or an equal. The socket must be rated for 660 W and 1,000 V(ac). The position of the socket and support must maintain the lamp in the correct relationship with the reflector and refractor for the designed light distribution pattern. The reflector may be an integral part of the housing.

The luminaire must comply with the isofootcandle curves as shown.

Low-pressure sodium lamp must:

1. Be a 180 W, single-ended, bayonet-base, tubular, gas-discharge lamp
2. Maintain a minimum of 93 percent of its initial lumens over its rated life
3. Reach 80 percent of its light output within 10 minutes
4. Restrike within 1 minute after a power outage or voltage drop at the lamp socket
5. Have ANSI L74/E designation

The lamp operating position must be at ±20 degrees from the horizontal.

Lamp must comply with the minimum performance requirements shown in the following table:

Minimum Performance Requirements

Quality characteristic	Requirement
Initial lumens (lm)	33,000
Rated average life at 10 h/start (h)	18,000

The low-pressure sodium lamp ballast must be an autotransformer or high-reactance type. The power factor must be not less than 90 percent when the ballast is operated at the nominal line voltage with a nominally-rated reference lamp. The lamp wattage regulation spread must not vary by more than ±6 percent for ±10 percent input voltage variation from nominal through life.

At the line voltage, the ballast must have a lamp current crest factor not exceeding 1.8 and ballast loss not exceeding 24 percent for a 180 W ballast.

The ballast must include a multi-circuit connector for quick disconnection.

86-1.02K(4) Reserved

86-1.02L Reserved

86-1.02M Photoelectric Controls

Photoelectric control types are as shown in the following table:

Photoelectric Control Types

Control type	Description
I	Pole-mounted photoelectric unit. Test switch housed in an enclosure.
II	Pole-mounted photoelectric unit. Contactor and test switch located in a service equipment enclosure.
III	Pole-mounted photoelectric unit. Contactor and a test switch housed in an enclosure.
IV	A photoelectric unit that plugs into a NEMA twist-lock receptacle, integral with the luminaire.
V	A photoelectric unit, contactor, and test switch located in a service equipment enclosure.

The pole-mounted adaptor for Type I, II, and III photoelectric controls must include a terminal block and cable supports or clamps to support the wires.

The enclosure for Type I and III photoelectric controls must be a NEMA 3R type. The enclosure must have a factory-applied, rust-resistant prime coat and finish coat. The enclosure must be hot-dip galvanized or painted to match the color of the lighting standard.

Photoelectric unit must:

1. Have a screen to prevent artificial light from causing cycling.
2. Have a rating of 60 Hz, 105-130 V(ac), 210-240 V(ac), or 105-240 V(ac).
3. Operate at a temperature range from -20 to 55 degrees C.
4. Consume less than 10 W.
5. Be a 3-prong, twist-lock type with a NEMA IP 65 rating, ANSI C136.10-compliant
6. Have a fail-on state
7. Fit into a NEMA-type receptacle
8. Turn on from 1 to 5 footcandles and turn off from 1.5 to 5 times the turn-on level. Measurements must be made by procedures in *EEI-NEMA Standards for Physical and Electrical Interchangeability of Light-Sensitive Control Devices Used in the Control of Roadway Lighting.*

Type I, II, III, and V photoelectric controls must have a test switch to allow manual operation of the lighting circuit. Switch must be:

1. Single-hole mounting, toggle type
2. Single pole and single throw
3. Labeled *Auto-Test* on a nameplate

Photoelectric control's contactor must be:

1. Normally open
2. Mechanical-armature type with contacts of fine silver, silver alloy, or equal or better material
3. Installed to provide a minimum space of 2-1/2 inches between the contactor terminals and the enclosure's sides

The terminal blocks must be rated at 25 A, 600 V(ac), molded from phenolic or nylon material, and be the barrier type with plated-brass screw terminals and integral marking strips.

86-1.02N Fused Splice Connectors

The fused splice connector for 240 and 480 V(ac) circuits must simultaneously disconnect both ungrounded conductors. The connector must not have exposed metal parts except for the head of the stainless steel assembly screw. The head of the assembly screw must be recessed a minimum of 1/32 inch below the top of the plastic boss that surrounds the head.

The connector must protect the fuse from water or weather damage. Contact between the fuse and fuse holder must be spring loaded.

Fuses must:

1. Be standard, midget, ferrule type

2. Have a nontime-delay feature
3. Be 3/32 by 1-1/2 inches

86-1.02O Grounding Electrodes

Grounding electrode must be:

1. 1 piece
2. Minimum 10-foot length of one of the following:
   2.1. Galvanized steel rod or pipe not less than 3/4 inch in diameter
   2.2. Copper clad steel rod not less than 5/8 inch in diameter

86-1.02P Enclosures

86-1.02P(1) General

The enclosures must be rated NEMA 3R and include a dead front panel and a hasp with a 7/16-inch-diameter hole for a padlock.

The enclosure's machine screws and bolts must not protrude outside the cabinet wall.

The fasteners on the exterior of an enclosure must be vandal resistant and not be removable. The exterior screws, nuts, bolts, and washers must be stainless steel.

86-1.02P(2) Service Equipment Enclosures

A service equipment enclosure must be factory wired and manufactured from steel and galvanized or have factory-applied, rust-resistant prime and finish coats, except Types II and III.

Type II and III service equipment enclosures must:

1. Be made of 0.125-inch minimum thickness 5052-H32 aluminum sheet complying with ASTM B209.
2. Be manufactured using gas metal arc welding with bare aluminum welding electrodes. The electrodes must comply with AWS A5.10 Class ER5356.
3. Be manufactured using welding procedures, welders, and welding operators that comply with the requirements for welding procedures, welders, and welding operators in in AWS B2.1, "Specification for Welding Procedure and Performance Qualification."
4. Have full-seal weld exterior seams.
5. Exterior welds must be ground smooth and edges filed to a radius of at least 0.03 inch.
6. Have a surface finish that complies with MIL-A-8625 for a Type II, Class I coating, except the anodic coating must have a minimum thickness of 0.0007 inch and a minimum coating weight of 0.001 oz/sq in.

If a Type III enclosure houses a transformer of more than 1 kVA, the enclosure must have effective screened ventilation louvers of no less than 50 sq. in for each louver. The framed screen must be stainless no. 304 with a no. 10 size mesh and secured with at least 4 bolts.

The dead front panel on a Type III service equipment enclosure must have a continuous stainless steel or aluminum piano hinge. The panel must be secured with a latch or captive screws. No live part must be mounted on the panel.

The enclosure must be watertight and marked as specified in NEC to warn of potential electric-arc flash hazards.

Internal conductors for the photoelectric control unit must be 600 V(ac), 14 AWG (THHN) stranded machine tool wire. Where subject to flexing, 19 stranded wire must be used.

The meter area must be have a sealable, lockable, weather-tight cover that can be removed without the use of tools.

For Type III-A, III-B, and III-C enclosures, the meter socket must be a 5-clip type, and the landing lug must be suitable for multiple conductors.

For a Type III-D enclosure, the meter socket must be a 7-clip type, and the landing lug must be suitable for multiple conductors. The pedestal must comply with the Electric Utility Service Equipment Requirements Committee drawing no. 308 or 309.

Landing lugs must be (1) sized for the incoming service utility conductors, (2) compatible with either copper or aluminum conductors, and (3) made of copper or tin-plated aluminum. Live parts of the electrical equipment must be guarded against accidental contact.

The main and neutral busses of the enclosure must be made of tin-plated copper, be rated for 125 A, and be suitable for copper or aluminum conductors.

Each service equipment enclosure must have up to 2 main circuit breakers that will simultaneously disconnect ungrounded service-entrance conductors.

Circuit breaker for a service equipment enclosure must:

1. Be quick-break on either automatic or manual operation
2. Be trip indicating
3. Be internal-trip type
4. Be UL listed or NRTL certified and comply with UL 489 or equal
5. Be clearly marked with the frame size
6. Have an operating mechanism that is enclosed and trip-free from the operating handle on overload
7. Have the trip rating clearly marked on the operating handle
8. Have an interior made of copper

Circuit breakers used as disconnects must have a minimum interrupting capacity of 10,000 A, rms.

The interior of the enclosure must accept plug-in circuit breakers. A minimum of 6 standard single-pole circuit breakers, 3/4" nominal, must be provided for branch circuits.

Identify each circuit breaker and component by description using an engraved phenolic nameplate attached with stainless steel rivets or screws.

Nameplate must be installed:

1. Adjacent to the breaker on the dead front panel. The characters must be a minimum of 1/8 inch high.
2. Adjacent to the component on the back panel. The characters must be a minimum of 1/8 inch high.
3. At the top exterior of the door panel. The nameplate must include the system number, voltage, and number of phases engraved in minimum 3/16-inch-high characters.

A plastic-laminated wiring diagram must be attached inside the enclosure with brass eyelets by a UL-listed or NRTL-certified method.

86-1.02P(3) Lighting and Sign Illumination Enclosures

A lighting and sign illumination enclosure must be manufactured from steel and either galvanized, cadmium plated, or powder coated.

86-1.02Q Cabinets

86-1.02Q(1) General

Cabinets must be factory wired except for battery backup system cabinets.

The fasteners on the exterior of a cabinet, except for battery backup system cabinets, must be removable and vandal resistant. The exterior screws, nuts, bolts, and washers must be stainless steel.

Terminal blocks, circuit breakers, and a power supply must be UL approved.

86-1.02Q(2) Department-Furnished Controller Cabinets

A Department-furnished controller assembly consists of a Model 170E or 2070E controller unit, a wired controller cabinet, and all auxiliary equipment required to operate the system. The Department does not furnish anchor bolts.

86-1.02Q(3) Controller Cabinets

The controller cabinet must be a Model 334L, comply with TEES, and be on the Authorized Material List for traffic signal control equipment. The cabinet must have 3 drawer shelves. Each shelf must be attached to the tops of 2 supporting angles with 4 screws.

86-1.02Q(4) Telephone Demarcation Cabinets

86-1.02Q(4)(a) General

07-21-17

The doors of a telephone demarcation cabinet must be attached using stainless steel piano hinges.

04-15-16

86-1.02Q(4)(b) Type A Telephone Demarcation Cabinets

Reserved

86-1.02Q(4)(c) Type B Telephone Demarcation Cabinets

A Type B telephone demarcation cabinet consists of a mounting panel, outlets, circuit breaker, fan, dead front plates, and fuse.

The mounting panel must be made of 3/4-inch-thick ACX-grade plywood.

The mounting panel must be fastened to the cabinet with nuts, lock washers, and flat washers to 10 welded studs.

The cabinet must be made of 0.125-inch-thick anodized aluminum.

The cabinet door must be hung and secured with drawn latches, lockable with a padlock. The padlock latches must each have a minimum 7/16-inch-diameter hole.

Ventilation louvers must be located on the door.

The fan must be located in a ventilator housing and be controlled thermostatically. The thermostat control must have a range from 80 to 130 degrees F.

The thermostat and fan circuit must be protected with a fuse rated for 175 percent of the motor capacity. The fan capacity must be a minimum 25 cfm.

86-1.02Q(4)(d) Type C Telephone Demarcation Cabinets

Reserved

86-1.02Q(5) Battery Backup System Cabinets

The cabinet for a battery backup system must comply with TEES and be on the Authorized Material List for traffic signal control equipment.

86-1.02R Signal Heads

86-1.02R(1) General

A signal head consists of a signal mounting assembly, backplate, and signal face.

The head must have a terminal block attached to the back of one housing. The terminal block must have enough positions to accommodate all indications. Each position must be permanently labeled for the indications used.

The metal signal heads must not fracture or deflect more than half the lens diameter when tested under California Test 666.

The plastic signal heads must not fracture or deflect when tested under California Test 605.

The deflection must not be more than 10 degrees in either the vertical or horizontal plane after the wind load has been removed from the front of the signal face or more than 6 degrees in either the vertical or horizontal plane after the wind load has been removed from the back of the signal face.

86-1.02R(2) Signal Mounting Assemblies

Signal mounting assembly must include:

1. 1-1/2-inch-diameter steel pipe or galvanized conduit
2. Pipe fitting made of ductile iron, galvanized steel, bronze, or aluminum alloy, Type AC-84B, no. 380
3. Mast arm and post-top slip fitters and terminal compartments made of cast bronze or hot-dip galvanized ductile iron

The horizontal distance between the vertical centerlines of the terminal compartment or slip fitter and of each signal face must not exceed 11 inches except where required for proper signal face alignment or to allow programming of programmed visibility signal sections.

The mounting assembly must be watertight and free of sharp edges or protrusions that might damage conductor insulation. The assembly must have positive-locking serrated fittings that prevent signal faces from rotating when the fittings are mated with similar fittings on the faces.

Each terminal compartment must be fitted with a terminal block having a minimum of 12 positions, each with 2 screw-type terminals. Each terminal must accommodate at least five no. 14 conductors. The terminal compartment must have a cover for easy access to the terminal block.

86-1.02R(3) Backplates

The backplate material must be a homogeneous black color with a lusterless finish.

A metal backplate must be made of a minimum 1/16-inch-thick 3001-14 aluminum.

A plastic backplate must have a minimum thickness of 1/16 inch and be formed from sheet plastic or assembled from extruded, molded, or cast plastic sections. Sections must be factory joined using one of the following:

1. Appropriate solvent cement.
2. Aluminum rivets and washers painted or permanently colored to match the backplate.
3. No. 10 machine screws with flat washers, lock washers, and nuts painted to match the backplate.

Each plastic backplate must be secured to the plastic signal face such that it resists removal or permanent deformation.

86-1.02R(4) Signal Faces

Signal face consists of signal sections with signal housings, LED modules, and visors.

Signal face must:

1. Be adjustable and allow for 360-degree rotation about the vertical axis
2. Comply with ITE publications ST-052-E, *Vehicle Traffic Control Signal Heads: Light Emitting Diode (LED) Circular Signal Supplement* and ST-054, *Vehicle Traffic Control Signal Heads: Light Emitting Diode (LED) Vehicle Arrow Traffic Signal Supplement*
3. Be sealed with a neoprene gasket at the top opening

A metal signal face must have a metal backplate and visor.

A plastic signal face must have a plastic backplate and visor.

If a signal face is supported by a Type MAS slip fitter, spacers are required between the 2 sections. The spacers must be made of the same material as the housing. The vertical dimension of the spacers must allow proper seating of the serrations between the slip fitter and the 2 sections. The 2 sections must be joined with at least two no. 10 minimum machine screws through holes near the front of the housing and the spacers and matching holes in a reinforcing plate installed in the housing.

86-1.02R(4)(a) Signal Sections

86-1.02R(4)(a)(i) General

Signal section must have:

1 Opening at the top and bottom for a 1-1/2-inch pipe
2. Maximum height of 10-1/4 inches for an 8-inch section and 14-3/4 inches for a 12-inch section
3. Hinge pins, door-latching devices, and other exposed hardware manufactured of Type 304/304L or 305 stainless steel
4. Interior screws and fittings manufactured of stainless steel or steel with a corrosion-resistant plating or coating
5. Gaskets made of a material that is not degraded if installed in a section with metal or plastic housing

Sections must be capable of being joined together to form a signal face in any combination. This interchangeability is not required between metal and plastic sections.

Each section must be joined to an adjacent section by one of the following:

1. Minimum of 3 machine screws for 8-inch sections and 4 machine screws for 12-inch sections, installed through holes near the front and back of the housing. Each screw must be a no. 10 and have a nut, flat washer, and lock washer.
2. 2 machine screws, each with a nut, flat washer, and lock washer, installed through holes near the front of the housing and a fastener through the 1-1/2-inch pipe opening. The fastener must have 2 large, flat washers to distribute the load around the pipe's opening and 3 carriage bolts, each with a nut and lock washer. The minimum screw size must be no. 10, and the carriage bolt size must be 1/4 inch.

The holes for the machine screws must be either cast or drilled during signal section fabrication. Each hole must be surrounded by a minimum 1/8-inch-wide boss to allow contact between signal sections about the axis of the hole.

A serrated nylon washer must be inserted between each plastic signal section and the metal mounting assembly. Each serrated nylon washer must be from 3/16 to 1/4 inch thick. The serrations must match those on the signal section and the mounting assembly.

86-1.02R(4)(a)(ii) Programmed Visibility Signal Sections

Programmed visibility signal section must have:

1. Nominal 12-inch-diameter circular or arrow indication
2. Cap visor
3. Adjustable connection that:
   3.1. Provides incremental tilting from 0 to 10 degrees above or below the horizontal
   3.2. Maintains a common vertical axis through couplers and mountings

The terminal connection must allow external adjustment about the mounting axis in 5-degree increments.

The visibility of each signal section must be capable of adjustment or programming within the section.

The adjustment for the section must be preset at 4 degrees below the horizontal.

86-1.02R(4)(a)(iii) Signal Housings

The signal housing must:

1. Be die-cast aluminum, permanent mold-cast aluminum, or if specified, structural plastic
2. Comply with ITE publications ST-052-E, *Vehicle Traffic Control Signal Heads: Light Emitting Diode (LED) Circular Signal Supplement* and ST-054, *Vehicle Traffic Control Signal Heads: Light Emitting Diode (LED) Vehicle Arrow Traffic Signal Supplement* if made of die-cast or permanent mold-cast aluminum
3. Have a 1-piece, hinged, square-shaped door that is:
   3.1. Designed to allow access for replacement of modules without the use of tools
   3.2. Secured such that it remains closed during loading tests
4. Have a watertight module or lens mounted in the door
5. Have a terminal block attached to the back, with the terminals permanently labeled for conductors to facilitate field wiring

Each housing must have reinforcement plates. Reinforcement plates must be either sheet aluminum, galvanized steel, or cast aluminum. Each plate must have a minimum thickness of 0.11 inch and a hole concentric with a 1-1/2-inch pipe-mounting hole in the housing. Reinforcement plates must be placed as specified in the following table:

Reinforcement Plate Placement

Material	Placement
Sheet aluminum	Inside and outside of housing
Galvanized steel	Inside of housing
Cast aluminum	Outside of housing

Reinforcement plates placed outside of the housing must be finished to match the signal housing color and be designed to allow a proper serrated coupling between the signal face and the mounting hardware. A minimum of three no. 10 machine screws must be installed through holes in each plate and matching holes in the housing. Each screw must have a round or binder head, a nut, and a lock washer.

A metal housing must have a metal visor.

Plastic housing must:

1. Be molded in a single piece or fabricated from 2 or more pieces joined into a single piece
2. Be a black color throughout, including the door, matching color no. 17038, 27038, or 37038 of FED-STD-595
3. Have UV stability
4. Be self-extinguishing

If reinforcing webs are used to connect the back of the housing to the top, bottom, and sides of the adjacent housing, reinforcement plates are not required.

The exterior of the housing must be painted as specified in sections 78-4.08 and 59.

86-1.02R(4)(b) LED Signal Modules

An LED signal module must be on the Authorized Material List for LED traffic signal modules.

An LED signal module must comply with ITE publications ST-052-E, *Vehicle Traffic Control Signal Heads: Light Emitting Diode (LED) Circular Signal Supplement* and ST-054, *Vehicle Traffic Control Signal Heads: Light Emitting Diode (LED) Vehicle Arrow Traffic Signal Supplement*, except:

1. Maximum module weight must be 4 lb
2. Module must be a sealed unit with:
   - 2.1. 2 color-coded conductors for the power connection except lane control modules must use 3 color-coded conductors
   - 2.2. Printed circuit board that complies with TEES, chapter 1, section 6
   - 2.3. Lens that is:
     - 2.3.1. Convex or flat with a smooth outer surface
     - 2.3.2. Made of UV-stabilized plastic or glass
   - 2.4. 1-piece EPDM gasket
3. Module must include 3-foot-long conductors with attached quick-disconnect terminals
4. Identification must include:
   - 4.1. Month and year of manufacture
   - 4.2. 1-inch-diameter symbol of the module type with the module color written adjacent to the symbol in 0.50-inch-high letters
5 LED must be the ultra-bright type rated for 100,000 hours of continuous operation
6. Module must have an integral power supply

Individual LEDs must be wired such that a loss or failure of 1 LED will not result in a loss of more than 5 percent of the module's light output. Failure of an individual LED in a string must not result in a loss of an entire string or other indication.

The symbol for a 12-inch U-turn section must be a 15/16-inch-wide inverted *U* with an arrow on the left end.

A lane control section must be a combination module with a red *X* and green arrow. The conductor function and color code must be as shown in the following table:

Conductor Function and Color Code

Function	Color
Neutral	White
Red *X*	Red
Green arrow	Brown

The minimum power consumption for an LED signal module must be 5 W.

The maximum power consumption for an LED signal module must be as shown in the following table:

Maximum Power Consumption

LED signal module type	Power consumption (W)					
	Red		Yellow		Green	
	25 °C	74 °C	25 °C	74 °C	25 °C	74 °C
8-inch circular	8	13	13	16	12	12
12-inch circular	11	17	22	25	15	15
12-inch arrow	9	12	10	12	11	11
12-inch U-turn	9	12	10	12	11	11
Bicycle	11	17	22	25	15	15
Programmed visibility	11	17	22	25	15	15
Lane control (*X*)	9	12	--	--	--	--
Lane control (*Arrow*)	--	--	--	--	11	11

Red and green LED signal modules operating over a temperature range from -40 to 74 degrees C and yellow LED signal modules operating at 25 degrees C must maintain the minimum illumination values for 48 months as shown in the following tables:

Minimum Maintained Intensities for Circular Indications

Angle (v,h)	Intensities (cd)					
	8-inch			12-inch		
	Red	Yellow	Green	Red	Yellow	Green
2.5, ±2.5	133	267	267	339	678	678
2.5, ±7.5	97	194	194	251	501	501
2.5, ±12.5	57	113	113	141	283	283
2.5, ±17.5	25	48	48	77	154	154
7.5, ±2.5	101	202	202	226	452	452
7.5, ±7.5	89	178	178	202	404	404
7.5, ±12.5	65	129	129	145	291	291
7.5, ±17.5	41	81	81	89	178	178
7.5, ±22.5	18	37	37	38	77	77
7.5, ±27.5	10	20	20	16	32	32
12.5, ±2.5	37	73	73	50	101	101
12.5, ±7.5	32	65	65	48	97	97
12.5, ±12.5	28	57	57	44	89	89
12.5, ±17.5	20	41	41	34	69	69
12.5, ±22.5	12	25	25	22	44	44
12.5, ±27.5	9	16	16	16	32	32
17.5, ±2.5	16	32	32	22	44	44
17.5, ±7.5	14	28	28	22	44	44
17.5, ±12.5	10	20	20	22	44	44
17.5, ±17.5	9	16	16	22	44	44
17.5, ±22.5	6	12	12	20	41	41
17.5, ±27.5	4	9	9	16	32	32

Minimum Maintained Luminance for Indications

Indication type	Luminance (fL)		
	Red	Yellow	Green
Arrow	1,610	3,210	3,210
U-turn	1,610	3,210	3,210
Bicycle	1,610	1,610	1,610
Lane control (*X*)	1,610	--	--
Lane control (*Arrow*)	--	--	1,610

Minimum Maintained Luminance for Programmed Visibility Indications

Indication type	Luminance (cd)		
	Red	Yellow	Green
PV at angle v=2.5, h=±2.5	314	314	314

Conductors must be prewired to the terminal block.

86-1.02R(4)(c) Visors and Directional Louvers

The visor must be a tunnel type.

The visor must have a downward tilt from 3 to 7 degrees with a minimum length of 9-1/2 inches for nominal 12-inch round lenses and 7 inches for nominal 8-inch round lenses.

A metal visor must be formed from minimum 0.050-inch-thick aluminum alloy sheet.

A plastic visor must be either formed from sheet plastic or blow-molded. The plastic must be a black homogeneous color with a lusterless finish. A visor must withstand a wind load applied to its side for 24 hours without permanent deformation or removal from its door when tested under California Test 605 for plastic visors and California Test 666 for metal visors.

If directional louvers are used, the louvers must fit into full-circular signal visors. Louvers must consist of one of the following:

1. Outside cylinder constructed of sheet steel with a minimum nominal thickness of 0.030 inch and vanes constructed of sheet steel with a minimum nominal thickness of 0.016 inch.
2. Outside cylinder and vanes constructed of 5052-H32 aluminum alloy of equal thickness.

86-1.02S Pedestrian Signal Heads

86-1.02S(1) General

A pedestrian signal head consists of a pedestrian signal mounting assembly and a pedestrian signal face comprising of a pedestrian signal housing, an LED countdown pedestrian signal face module, and a front screen.

86-1.02S(2) Pedestrian Signal Mounting Assemblies

A pedestrian signal mounting assembly must comply with the specifications for a signal mounting assembly in section 86-1.02R, except mast arm slip fitters are not required.

86-1.02S(3) Pedestrian Signal Faces

86-1.02S(3)(a) General

Each pedestrian signal face must include a light-duty terminal block rated at 5 A and have 12 positions with no. 6-by-1/8-inch binder head screws. Each position must have 1 screw-type terminal.

The wiring and terminal block must comply with ITE publication ST-055-E, *Pedestrian Traffic Control Signal Indicators: Light Emitting Diode (LED) Signal Modules*.

86-1.02S(3)(b) Pedestrian Signal Housings

Pedestrian signal housing must comply with the specifications for a signal housing in 86-1.02R(4)(a)(iii), except the maximum overall dimensions must be 18-1/2 inches wide, 19 inches high, and 11-1/2 inches deep and without:

1. Visor
2. Watertight module or lens mounted in the door
3. Reinforcement plates

The housing must have a terminal block attached to the back. The terminal block must have enough positions to accommodate all indications. Each position must be permanently labeled for the indications used.

86-1.02S(3)(c) LED Countdown Pedestrian Signal Face Modules

An LED countdown PSF module must comply with ITE publication ST-055-E*, Pedestrian Traffic Control Signal Indicators: Light Emitting Diode (LED) Signal Modules*, except the material must comply with ASTM D3935 and the module must have:

1. Ultra-bright-type LED rated for 100,000 hours of continuous operation.
2. Lot number and month and year of manufacture permanently marked on the back of the module
3. Prominent and permanent vertical markings for accurate indexing and orientation within the pedestrian signal housing if a specific mounting orientation is required. Markings must be a minimum of 1 inch in height and include an up arrow and the word *up* or *top.*
4. Circuit board complying with TEES, chapter 1, section 6.

Individual LEDs must be wired such that a loss or failure of 1 LED will not result in a loss of more than 5 percent of the module's light output. Failure of an individual LED in a string must not result in a loss of an entire string or other indication.

Each symbol must be at least 9 inches high and 5-1/4 inches wide. The 2-digit countdown timer, *Upraised Hand*, and *Walking Person* indications must be electronically isolated from each other. The 3 indications must not share a power supply or interconnect circuitry.

The module must operate over the specified ambient temperature and voltage range and be readable both day and night at distances up to the full width of the area to be crossed. Upon initial testing at 25 degrees C, the module must have at least the luminance values shown in the following table:

Luminance Values

PSF module symbol	Luminance
Upraised hand and 2-digit countdown timer (fL)	1,094
Walking person (fL)	1,547

The module must not exceed the power consumption requirements shown in the following table:

Maximum Power Consumption Requirements

PSF module display	At 24 ºC	At 74 ºC
Upraised Hand	10.0 W	12.0 W
Walking Person	9.0 W	12.0 W
2-digit countdown timer	6.0 W	8.0 W

07-21-17

If the pedestrian change interval is interrupted, then the 2-digit countdown timer and display must reset to the full pedestrian change interval before being initiated the next time. The 2-digit countdown display on the PSF module must go dark within a second after displaying "0".

04-15-16

86-1.02S(3)(d) Front Screen

Pedestrian signal face must have a front screen that is one of the following types:

1. 3/8-inch-thick aluminum honeycomb screen with 0.2-inch-wide cells or a 1/2-inch-thick plastic screen with 3/8-inch-wide squares with 1/16-inch wall thickness that:
   1.1. Is installed so it tilts downward at an angle of 15 ± 2 degrees from the top and completely covers the message plate.
   1.2. Includes a clear front cover made of either a minimum 1/8-inch-thick acrylic plastic sheet or a minimum 1/16-inch-thick polycarbonate plastic.
   1.3. Is held firmly in place, including the cover, with stainless steel or aluminum clips or stainless steel metal screws.
2. Polycarbonate screen that:
   2.1. Has a nominal thickness of 1/32 inch.
   2.2. Is a 1-1/2-inch-deep eggcrate or Z-crate type.
   2.3. Is mounted in a frame constructed of aluminum alloy or polycarbonate with a minimum thickness of 0.040 inch.
   2.4. Is held in place with stainless steel screws.

The screen and frame of a pedestrian signal face must be made of either (1) plastic that is a flat black color or (2) anodized aluminum that is a flat black color or finished with lusterless, black, exterior-grade latex paint formulated for application to metal surfaces.

86-1.02T Accessible Pedestrian Signals

Accessible pedestrian signal must comply with the *California MUTCD*, chapter 4E, and have:

07-21-17

1. Audible speech message that plays when the push button is actuated. The accessible pedestrian signal must have at least 5 audible message options.

04-15-16

2. Push button locator tone that clicks or beeps.

04-20-18

3. Feature that activates the pedestrian phase during any failure without causing the pedestrian phase to be on RECALL.

04-15-16

An accessible pedestrian signal must function with the Department-furnished Model 170E/2070E controller assembly.

No part of the accessible pedestrian signal must be installed inside the controller cabinet.
Power for the accessible pedestrian signal must be from the pedestrian signal housing terminal block.

The housing for the signal assembly must be made of corrosion-resistant material. Theft-proof bolts used for mounting the housing to the standard must be stainless steel with a content of 17 percent chromium and 8 percent nickel. The housing must be shaped to fit the pole's curvature.

The color of a metallic housing must match color no. 33538 of FED-STD-595.

The color of a plastic housing must match color no. 17038, 27038, or 37038 of FED-STD-595.

Accessible pedestrian signal must:

1. Have electronic switches, a potentiometer, or an access port for a device for controlling and programming the volume level and messaging
2. Be weatherproof and shockproof

Enclosure for the accessible pedestrian signal must:

1. Weigh less than 7 lb
2. Measure less than 16 by 6 by 5 inches
3. Have a wiring hole with a diameter not exceeding 1-1/8 inches
5. Have a switch for a push button
6. Have a vibrotactile device on the push button or on the arrow
7. Have an internal weatherproof speaker and microphone that senses the ambient sound level

The separation between adjacent holes used for conductors and mounting must be at least twice the diameter of the larger hole.

The speaker grills must be located on the surface of the enclosure. The speakers must not interfere with the housing or its mounting hardware.

04-20-18

The cable between the accessible pedestrian signal assembly and the pedestrian signal head must have a:

1. Minimum four no. 18 stranded or larger tinned copper conductors with a minimum insulation thickness of 15 mils
2. Cable jacket with a minimum thickness of 20 mils and rated for a minimum:
   2.1. 300 V(ac)
   2.2. 80 degrees C
3. Nominal outside diameter less than 350 mils
4. Conductor color code of black, white, red and green

04-15-16

86-1.02U Push Button Assemblies

The housing for a push button assembly must be made of die-cast aluminum, permanent mold-cast aluminum, or UV-stabilized self-extinguishing structural plastic. The plastic housing must have a color throughout that matches color no. 17038, 27038, or 37038 of FED-STD-595.

If the push button is to be attached to a pole, the housing must be shaped to fit the pole's curvature.

The assembly must be waterproof and shockproof.

The push button's switch must be a single-pole, double-throw switching unit with screw-type terminals rated 15 A at 125 V(ac).

Switch for the push button must have:

1. Plunger actuator and a U frame to allow recessed mounting in the push button housing
2. Operating force of 3.5 lb
3. Maximum pretravel of 5/64 inch
4. Minimum overtravel of 1/32 inch
5. Differential travel from 0.002 to 0.04 inch
6. Minimum 2-inch diameter actuator

86-1.02V Reserved

86-1.02W Loop Detector Sealants

86-1.02W(1) General

Sealant for filling loop detector slots must be one of the following:

1. Asphaltic emulsion
2. Elastomeric sealant
3. Epoxy sealant for inductive loops
4. Hot-melt rubberized asphalt

86-1.02W(2) Asphaltic Emulsion Sealant

Asphaltic emulsion sealant must comply with the State Specification 8040-41A-15.

86-1.02W(3) Elastomeric Sealant

Elastomeric sealant must be a polyurethane material that cures only in the presence of moisture if used within the stated shelf life. The sealant must be suitable for use in both asphalt concrete and concrete pavement.

The cured elastomeric sealant must comply with the requirements shown in the following table:

Cured Elastomeric Sealant Requirements

Quality characteristic	Test method	Requirement
Hardness	ASTM D2240[a]	65–85
Tensile strength (min, MPa)	ASTM D412[b]	3.45
Elongation (min, %)		400
Flex at -40 °C[c]	--	No cracks
Weathering resistance	ASTM D822[d]	Slight chalking
Salt spray resistance:	ASTM B117[e]	
Tensile strength (min, MPa)		3.45
Elongation (min, %)		400
Dielectric constant (%)	ASTM D150[f]	<25

[a]Indentation at 25 °C and 50% relative humidity (Rex. Type A, Model 1700 only)
[b]Die C pulled at 508 mm/minute
[c]0.6-mm free film bend (180°) over 13-mm mandrel
[d]Weatherometer 350 h, cured 7 days at 25 °C and 50% relative humidity
[e]28 days at 38 °C with 5% NaCl, Die C, and pulled at 508 mm/minute)
[f]Change over a temperature range from -30 to 50 °C

86-1.02W(4) Hot-Melt Rubberized Asphalt Sealant

Hot-melt rubberized asphalt sealant must:

1. Be in solid form at room temperature and fluid at an application temperature range from 190 to 205 degrees C
2. Not produce toxic fumes
3. Be suitable for use in both asphalt concrete and concrete pavement
4. Be packaged in containers clearly marked *Detector Loop Sealant* with the manufacturer's batch and lot number.

The cured hot-melt rubberized asphalt sealant must comply with the requirements shown in the following table:

Cured Hot-Melt Rubberized Asphalt Sealant Requirements

Quality characteristic	Test method	Requirement
Cone penetration (max, 1/10 mm)	ASTM D5329, sec. 6[a]	35
Flow (max, mm)	ASTM D5329, sec. 8[b]	5
Resilience (min, %)	ASTM D5329, sec. 12[c]	25
Softening point (min, °C)	ASTM D36	82
Ductility (min, cm)	ASTM D113[d]	30
Flash point, Cleveland Open Cup (min, °C)	ASTM D92	288
Viscosity (Pa·s)	ASTM D4402[e]	2.5–3.5

[a]At 25 °C, 150 g, 5 s
[b]At 60 °C
[c]At 25 °C
[d]At 25 °C, 5 cm/minute
[e]Brookfield Thermosel, no. 27 spindle, 20 rpm, 190 °C

07-21-17

86-1.02X Electronic Markers and Locators

04-20-18

The electronic marker must be discrete or cast inside the pull box cover.

An electronic marker must:

1. Be passive
2. Be energized solely by electromagnetic energy received from the interrogating electronic marker locator
3. Operate over a temperature range from -4 to 122 degrees F

4. Operate at a frequency range between 30 kHz to 300 kHz and comply with FCC part 15
5. Have a watertight and moisture-resistant housing

In addition, a discrete electronic marker must:

1. Have a maximum diameter of 6 inches
2. Weigh a maximum of 2 lb
3. Be colored red for power and orange for communication circuits
4. Be self-leveling or omnidirectional

The electronic marker locator must:

1. Be compatible with the electronic marker
2. Detect the electronic marker in pull boxes buried under dirt, sand, or snow
3. Detect the electronic marker from a maximum distance of 5 feet vertically with a 6-inch offset
4. Have a headphone jack
5. Have a battery level indicator
6. Have a large character display
7. Have a numeric and audible signal strength indicator
8. Have a speaker volume adjustment

04-15-16

86-1.02Y Transformers

A transformer must be single-phase and may be a nonsubmersible or submersible type.

A transformer must be a dry type designed for operation on a 60 Hz supply. The transformer must have a decal showing a connection diagram. The diagram must show either color coding or wire tagging with primary (H1, H2) or secondary (X1, X2) markers and the primary and secondary voltage and volt-ampere rating. A transformer must comply with the electrical requirements shown in the following table:

Transformer Electrical Requirements

Quality characteristic	Requirement
Rating (V(ac))	120/480, 120/240, 240/480, or 480/120
Efficiency (%)	> 95
Secondary voltage regulation and tolerance from half load to full load (%)	±3

Secondary 240 and 480 V(ac) windings must be center tapped.

The transformer must withstand the application of 2,200 V(ac) from core to coils and from coil to coil for a 1-minute period when tested immediately after operation of the transformer at full load for 24 hours.

The external leads for the secondary connections must be no. 10 Type USE rated for 600 V(ac).

The transformer's leads must extend a minimum of 12 inches from the case.

The transformer's insulation must be NEMA 185 C or better.

Each transformer must:

1. Include metal half-shell coil protection.
2. Have moisture-resistant, synthetic-varnish-impregnated windings.
3. Be waterproof and suitable for outdoor operation.

Each submersible transformer must:

1. Include a handle and a hanger.
2. Be securely encased in a rugged, corrosion-resistant, watertight case.
3. Have leads that extend out through 1 or more sealed hubs.

4. Be manufactured to withstand a 5-day test with 12-hour on and off periods submerged in 2 feet of salt water that is 2 percent salt by weight. The operating periods must be at full load.

86-1.02Z Batteries

Battery must:

1. Be deep-cycle, sealed, prismatic, lead-calcium-based, absorbed-glass-mat, valve-regulated, lead-acid type
2. Be rated for 12 V
3. Be rated for a temperature range from -25 to 60 degrees C
4. Be group size 24
5. Be commercially available and stocked locally
6. Be marked with a date code, maximum recharge data, and recharge cycles
7. Be new and fully charged when furnished
8. Be free from damage or deformities
9. Have a carrying handle
10. Have 2 top-mounted, threaded-stud posts that include all washers and nuts
11. Include insulating rubber covers for protecting the lugs, posts, and wiring: red for the positive terminal and black for the negative terminal

If a battery is used for a battery backup system, it must accommodate 3/8-inch ring lugs of a Department-furnished battery harness.

86-1.03 CONSTRUCTION

Not Used

86-1.04 PAYMENT

Not Used

Replace section 87 with:

04-15-16

87 ELECTRICAL SYSTEMS

04-20-18

87-1 GENERAL

87-1.01 GENERAL

87-1.01A Summary

Section 87 includes general specifications for constructing and installing electrical systems.

The Department deducts the cost for maintenance performed by the Department on new or portions of existing systems modified under the Contract.

87-1.01B Definitions

Reserved

87-1.01C Submittals

Reserved

87-1.01D Quality Assurance

87-1.01D(1) General

Reserved

04-20-18

87-1.01D(2) Quality Control

87-1.01D(2)(a) General

Before shipping the material to the job site, submit to METS test samples of:

1. Accessible pedestrian signals
2. LED countdown pedestrian signal face modules

3. LED signal modules
4. LED luminaires

Submit a sample size as shown in the following table:

Electrical Material Sampling

Contract quantity	Test sample size
1–8	1
9–15	2
16–25	3
26–90	5
91–150	8
151–280	13
281–500	20
501–1200	32

Before starting operation of an electrical system, perform a conductor test in the presence of the Engineer.

Conductor test consists of testing each conductor and the conductors in cables for:

1. Continuity.
2. Grounds.
3. Insulation resistance at 500 V(dc) between the circuit and ground. A minimum insulation resistance of 100 MΩ on circuits must be attained.

Start the operational test of the system on any day except Friday or the day before a holiday. The operational test for signals must start from 9:00 a.m. to 2:00 p.m. Notify the Engineer 48 hours before starting the test.

An operational test consists of a minimum of 5 business days of continuous, satisfactory operation of the system. If the system fails, correct the problem and retest the system. A shutdown of the system caused by traffic, a power interruption, or unsatisfactory performance of Department-furnished materials does not constitute discontinuity of the test.

87-1.01D(2)(b) Electronic Markers

Electronic marker test consists of placing the electronic marker in the pull box, temporarily marking the pull box location with a utility flag, and using a compatible electronic marker locator to perform the following location test in the presence of the Engineer:

1. Within a 10 foot radius of the electronic marker, slowly move the locator toward the marker to determine the exact location of the pull box
2. Repeat the test at four different points at 90 degree from each other on a horizontal plane, away from the marker location, as shown. Take the average of the four points to determine the detected location of the pull box.
3. Detected location of the pull box must be within 0.5 feet of the actual location.

87-1.01D(2)(c) Battery Backup System

Notify the Engineer 48 hours before testing the battery backup system.

Test the system in the presence of the Engineer by turning off the power to the signal system at the service equipment enclosure. The signal system must run continuously for 30 minutes. If the battery

backup system fails, correct the problem and retest the system for another 30 minutes. After successful completion of the test, turn the power on for the signal system.

87-1.01D(2)(d) Piezoelectric Axle Sensors

Piezoelectric axle sensors consists of testing each piezoelectric axle sensor for each lane of data collection as follows:

1. Capacitance must be 20 percent of the sensor's data sheet as provided by the manufacturer.
2. Dissipation factor must be less than 0.04 nF when measured in the 20 nF range.
3. Resistance must be greater than 20 Megaohms.
4. Minimum of 100 per-vehicle records must be collected for each lane. Collected data must have:
   - 4.1 Total volume of ±3 percent accuracy.
   - 4.2 Vehicle classification of 95 percent accuracy by type.

Collect data files from the on-site equipment using the central office host computer to verify the communication link is working.

04-15-16

87-1.02 MATERIALS

Not Used

87-1.03 CONSTRUCTION

87-1.03A General

The Engineer determines the final locations of electrical systems.

Verify the locations of electrical systems and the depths of existing detectors, conduits, and pull boxes.

Notify the Engineer before performing work on the existing system.

You may shut down the system for alteration or removal.

Where an existing Department underground facility is shown within 10 feet of any excavation, locate and field mark the facility before performing work that could damage or interfere with the existing facility.

If an existing facility is within 2 feet of an excavation, determine the exact location of the facility by excavating with hand tools before using any power-operated or power-driven excavating or boring equipment. A vacuum excavator may be used if authorized.

Notify the Engineer immediately if an existing facility is damaged by your activities.

If existing underground conduit is to be incorporated into a new system, clean it with a mandrel or cylindrical wire brush and blow it clean with compressed air.

Limit the shutdown of traffic signal systems to normal working hours. Notify the local traffic enforcement agency before shutting down the signal.

Place temporary W3-1 and R1-1 signs in each direction to direct traffic through the intersection during shutdown of the signal. Place two R1-1 signs for 2-lane approaches. The signs must comply with part 2 of the *California MUTCD*.

Cover signal faces when the system is shut down overnight. Cover temporary W3-1 and R1-1 signs when the system is turned on.

If you work on an existing lighting system and the roadway is to remain open to traffic, ensure the system is in operation by nightfall.

Replace detectors you damage within 72 hours, or the Department replaces them and deducts the cost.

Work performed on an existing system not described is change order work.

Do not use electrical power from existing highway facilities unless authorized.

Maintain a minimum 48-inch clearance for a pedestrian pathway when placing equipment.

Except for service installation or work on service equipment enclosures, do not work above ground until all materials are on hand to complete the electrical work at each location.

Bond all metal components to form a continuous grounded system as specified in NEC.

Ground metallic equipment mounted less than 8 feet above the ground surface on a wood pole.

If you damage any portion of a concrete curb, sidewalk, curb ramp, driveway, or gutter depression, replace the entire section between contraction or expansion joints under section 73.

Apply equipment identification characters.

Orient louvers, visors, and signal faces such that they are clearly visible to approaching traffic from the direction being controlled.

Test loops and the detector lead-in cable circuit for continuity, ground, and insulation resistance at the controller cabinet before connecting detector lead-in cable to the terminal block.

Perform an operational test of the systems.

Before starting the operational test for systems that impact traffic, the system must be ready for operation, and all signs, pavement delineation, and pavement markings must be in place at that location.

87-1.03B Conduit Installation

87-1.03B(1) General

The installation of conduit includes installing caps, bushings, and pull tape and terminating the conduit in pull boxes, foundations, poles, or a structure.

04-20-18

Notify the Engineer at least 4 business days before starting horizontal directional drilling method or jack and drill activities.

04-15-16

Limit the number of bends in a conduit run to no more than 360 degrees between pull points.

Use conduit to enclose conductors except where they are installed overhead or inside standards or posts.

You may use a larger size conduit than specified for the entire length between termination points. Do not use a reducing coupling.

Extend an existing conduit using the same material. Terminate conduits of different materials in a pull box.

Install 2 conduits between a controller cabinet and the adjacent pull box.

Use a minimum trade size of conduit of:

1. 1-1/2 inches from an electrolier to the adjacent pull box
2. 1 inch from a pedestrian push button post to the adjacent pull box
3. 2 inches from a signal standard to the adjacent pull box
4. 3 inches from a controller cabinet to the adjacent pull box
5. 2 inches from an overhead sign to the adjacent pull box
6. 2 inches from a service equipment enclosure to the adjacent pull box
7. 1-1/2 inches if unspecified

Use Type 1 conduit:

1. On all exposed surfaces
2. In concrete structures
3. Between a structure and the nearest pull box

Ream the ends of shop-cut and field-cut conduit to remove burrs and rough edges. Make the cuts square and true. Do not use slip joints and running threads to couple conduit. If a standard coupling cannot be

used for metal-type conduit, use a threaded union coupling. Tighten the couplings for metal conduit to maintain a good electrical connection.

04-20-18

Cap the ends of conduit to prevent debris from entering before installing the conductors or cables. Use a plastic cap for Type 1, 2, and 5 conduits and a standard pipe cap for all other types of conduit or bell.

04-15-16

For Type 1, 2, and 5 conduits, use threaded bushings and bond them using a jumper. For other types of conduit, use nonmetallic bushings.

Do not install new conduit through foundations.

Cut Type 2 conduit with pipe cutters; do not use hacksaws. Use standard conduit-threading dies for threading conduit. Tighten conduit into couplings or fittings using strap wrenches or approved groove joint pliers.

Cut Type 3 conduit with tools that do not deform the conduit. Use a solvent weld for connections.

Protect shop-cut threads from corrosion under the standards shown in the following table:

Shop-Cut Thread Corrosion Protection

Conduit	Standard
Types 1 and 2	ANSI C80.1
Type 5	ANSI C80.6

Apply 2 coats of unthinned, organic zinc-rich primer to metal conduit before painting. Use a primer on the Authorized Material List for organic zinc-rich primers. Do not use aerosol cans. Do not remove shop-installed conduit couplings.

For conduits, paint:

1. All exposed threads
2. Field-cut threads, before installing conduit couplings to metal conduit
3. Damaged surfaces on metal conduit

If a Type 2 conduit or conduit coupling coating is damaged:

1. Clean the conduit or fitting and paint it with 1 coat of rubber-resin-based adhesive under the manufacturer's instructions
2. Wrap the damaged coating with at least 1 layer of 2-inch-wide, 20 mils-minimum-thickness, PVC tape under ASTM D1000 with a minimum tape overlap of 1/2 inch

You may repair damaged spots of 1/4 inch or less in diameter in the thermoplastic coating by painting with a brushing-type compound supplied by the conduit manufacturer.

If factory bends are not used, bend the conduit to a radius no less than 6 times its inside diameter without crimping or flattening it. Comply with the bending requirements shown in the following table:

Conduit-Bending Requirements

Type	Requirement
1	Use equipment and methods under the conduit manufacturer's instructions.
2	Use a standard bending tool designed for use on thermoplastic-coated conduit. The conduit must be free of burrs and pits.
3	Use equipment and methods under the conduit manufacturer's instructions. Do not expose the conduit to a direct flame.
5	Use equipment and methods under the conduit manufacturer's instructions.

Install pull tape with at least 2 feet of slack in each end of the conduit that will remain empty. Attach the tape's ends to the conduit.

Install conduit terminating in a standard or pedestal from 2 to 3 inches above the foundation. Slope the conduit toward the handhole opening.

Terminate conduit installed through the bottom of a nonmetallic pull box 2 inches above the bottom and 2 inches from the wall closest to the direction of the run.

87-1.03B(2) Conduit Installation for Structures

87-1.03B(2)(a) General

Paint exposed Type 1 conduit the same color as the structure.

Install galvanized steel hangers, steel brackets, and other fittings to support conduit in or on a wall or bridge.

87-1.03B(2)(b) New Structures

Seal and make watertight the conduits which lead to soffits, wall-mounted luminaires, other lights, and fixtures located below the pull box grade.

If you place a conduit through the side of a nonmetallic pull box, terminate the conduit 2 inches from the wall and 2 inches above the bottom. Slope the conduit toward the top of the box to facilitate pulling conductors.

For ease of installation and if authorized, you may use Type 4 conduit instead of Type 1 conduit for the final 2 feet of conduit entering a pull box in a reinforced concrete structure.

Install an expansion fitting where a conduit crosses an expansion joint in a structure. Each expansion fitting for metal conduit must include a copper bonding jumper having the ampacity as specified in NEC.

Install an expansion-deflection fitting for an expansion joint with a 1-1/2-inch movement rating. The fitting must be watertight and include a molded neoprene sleeve, a bonding jumper, and 2 silicon bronze or zinc-plated iron hubs.

For an expansion joint with a movement rating greater than 1-1/2 inches, install the expansion-deflection fitting as shown.

For conduit installed inside of bridge structures, you must:

1. Install precast concrete cradles made of minor concrete and commercial-quality welded wire fabric. The minor concrete must contain a minimum of 590 lb of cementitious material per cubic yard. The cradles must be moist cured for a minimum of 3 days.
2. Bond precast concrete cradles to a wall or bridge superstructure with one of the following:
   - 2.1. Epoxy adhesive for bonding freshly-mixed concrete to hardened concrete.
   - 2.2. Rapid-set epoxy adhesive for pavement markers.
   - 2.3. Standard-set epoxy adhesive for pavement markers.
3. Use a pipe sleeve or form an opening for a conduit through a bridge superstructure. The sleeve or opening through a prestressed member or conventionally reinforced precast member must be:
   - 3.1. Oriented transverse to the member.
   - 3.2. Located through the web.
   - 3.3. No more than 4 inches in size.
4. Wrap the conduit with 2 layers of asphalt felt building paper and securely tape or wire the paper in place for a conduit passing through a bridge abutment wall. Fill the space around the conduit with mortar under section 51-1, except the proportion of cementitious material to sand must be 1 to 3. Fill the space around the conduits after prestressing is completed.

Thread and cap a conduit installed for future use in structures. Mark the location of the conduit's end in a structure, curb, or wall directly above the conduit with a *Y* that is 3 inches tall.

87-1.03B(2)(c) Existing Structures

Run surface-mounted conduit straight and true, horizontal or vertical on the wall, and parallel to walls on ceilings or similar surfaces. Support the conduit at a maximum of 5-foot intervals where needed to prevent vibration or deflection. Support the conduit using galvanized, malleable-iron, conduit clamps, and clamp backs secured with expansion anchorage devices complying with section 75-3.02C. Use the

largest diameter of galvanized, threaded studs that will pass through the mounting hole in the conduit clamp.

87-1.03B(3) Conduit Installation Underground

87-1.03B(3)(a) General

Install conduit to a depth of:

1. 14 inches for the trench-in-pavement method
2. 18 inches, minimum, under sidewalk and curbed paved median areas
3. 42 inches, minimum, below the bottom of the rail of railroad tracks
4. 30 inches, minimum, everywhere else below grade

Place conduit couplings at a minimum of 6 inches from the face of a foundation.

Place a minimum of 2 inches of sand bedding in a trench before installing Type 2 or Type 3 conduit and 4 inches of sand bedding over the conduit before placing additional backfill material.

If installing conduit within the limits of hazardous locations as specified in NEC for Class I, division 1, install and seal Type 1 or Type 2 conduit with explosion-proof sealing fittings.

87-1.03B(3)(b) Conduit Installation under Paved Surfaces

You may lay conduit on existing pavement within a new curbed median constructed on top.

07-21-17

Install conduit under existing pavement by either the horizontal directional drill method or jack and drill method. You may use the trench-in-pavement method for either of the following conditions:

1. If conduit is to be installed behind the curb under the sidewalk
2. If the delay to vehicles will be less than 5 minutes

04-15-16

Do not use the trench-in-pavement method for conduit installations under freeway lanes or freeway-to-freeway connector ramps.

04-20-18

87-1.03B(3)(c) High Density Polyethylene Conduit Installation

For sweeps, maintain a conduit bend radius of a minimum 10 times the outside diameter of the conduit.

Conduits must not protrude more than 2 inches inside the pull box and vaults, and must enter at an angle less than 20 degrees from either the vertical or horizontal axis.

Demonstrate a minimum of 2 test fusions to the Engineer prior to performing fusion operations on HDPE conduit to be installed.

Join HDPE conduit using the electro fusion method recommended by the conduit manufacturer. Do not expose conduit to direct flame. The electro-fusion must be performed by a person certified by the conduit manufacturer.

Place warning tape in the trench 6 inches below finished grade.

Backfill trench with slurry concrete pigmented matching FED-STD-595 under 19-3.02E. The size of the aggregate must be no larger than 3/8 inch. Provide adequate spacers, tie-downs and bracing to maintain conduits in place during backfill.

For trenches in paved areas, only the top 4 inch of concrete backfill must be pigmented.

Blow out all conduits with compressed air until all foreign material is removed, before installing innerducts.

Install innerducts in accordance with the manufacturer's installation procedures. Innerducts must be one continuous unit between splice vaults. Innerducts may be interrupted inside pull boxes located between splice vaults and cabinets.

Lubricate innerducts per manufacturer's instructions during installation.

Install a pull tape in conduits and innerducts to remain empty.

Seal the ends of conduit after cables or pull tape are installed.

04-15-16

87-1.03B(3)(d) Conduit Installation under Railroad Tracks

Install Type 1 or Type 2 conduit with a minimum diameter of 1-1/2 inches under railroad tracks. If you use the jacking or drilling method to install the conduit, construct the jacking pit a minimum of 13 feet from the tracks' centerline at the near side of the pit. Cover the jacking pit with planking if left overnight.

04-20-18

87-1.03B(4) Conduit Installation by Horizontal Directional Drilling Method

Install a conduit to a minimum depth of 4 feetand maximum depth of 6 feet. If you must install a conduit less than 4 feet in depth or greater than 6 feet in depth, the installation must be authorized.

The diameter of the bore hole must be no larger than 1.5 times the outside diameter of the conduit.

Water-based mineral slurry or wetting solution may be used to lubricate the boring tool and stabilize the soil surrounding the boring path.

Disposal of residue must comply with section 13-4.03D.

The horizontal directional drilling equipment must have directional control of the boring tool and have an electronic boring tool location detection system. During operation, the equipment must be able to determine the location of the tool both horizontally and vertically.

Do not use slurry cement backfill.

Use a mandrel to prove the conduit is free and clear of dirt, rocks, and other debris after installation.

07-21-17

87-1.03B(5) Conduit Installation by the Jack and Drill Method

04-15-16

Keep the jacking or drilling pit 2 feet away from the pavement's edge. Do not weaken the pavement or soften the subgrade with excessive use of water.

If an obstruction is encountered, obtain authorization to cut small holes in the pavement to locate or remove the obstruction.

You may install Type 2 or Type 3 conduit under the pavement if a hole larger than the conduit's diameter is predrilled. The predrilled hole must be less than one and half the conduit's diameter.

Remove the conduit used for drilling or jacking and install new conduit for the completed work.

87-1.03B(6) Conduit Installation by the Trenching-In-Pavement Method

Install conduit by the trenching-in-pavement method using a trench approximately 2 inches wider than the conduit's outside diameter but not exceeding 6 inches in width.

Where additional pavement is to be placed, you must complete the trenching before the final pavement layer is applied.

If the conduit shown is to be installed under the sidewalk, you may install it in the street within 3 feet of and parallel to the face of the curb. Install pull boxes behind the curb.

Cut the trench using a rock-cutting excavator. Minimize the shatter outside the removal area of the trench.

Dig the trench by hand to the required depth at pull boxes.

Place conduit in the trench.

Backfill the trench with minor concrete to the pavement's surface by the end of each work day. If the trench is in asphalt concrete pavement and no additional pavement is to be placed, backfill the top 0.10 foot of the trench with minor HMA within 3 days after trenching.

87-1.03C Installation of Pull Boxes

87-1.03C(1) General

Install pull boxes no more than 200 feet apart.

You may install larger pull boxes than specified or shown and additional pull boxes to facilitate the work except in structures.

Install a pull box on a bed of crushed rock and grout it before installing conductors. The grout must be from 0.5 to 1 inch thick and sloped toward the drain hole. Place a layer of roofing paper between the grout and the crushed rock sump. Make a 1-inch drain hole through the grout at the center of the pull box.

Set the pull box such that the top is 1-1/4 inches above the surrounding grade in unpaved areas and leveled with the finished grade in sidewalks and other paved areas.

Place the cover on the box when not working in it.

Grout around conduits that are installed through the sides of the pull box.

Bond and ground the metallic conduit before installing conductors and cables in the conduit.

Bond metallic conduits in a nonmetallic pull box using bonding bushings and bonding jumpers.

Do not install pull boxes in concrete pads, curb ramps, or driveways.

Reconstruct the sump of a pull box if disturbed by your activities. If the sump was grouted, remove and replace the grout.

87-1.03C(2) Nontraffic Pull Boxes

04-20-18

For buried pull boxes, install the electronic marker.

04-15-16

If you bury a nontraffic pull box, set the box such that the top is 6 to 8 inches below the surrounding grade. Place a 20-mil-thick plastic sheet made of HDPE or PVC virgin compounds to prevent water from entering the box.

Place mortar between a nontraffic pull box and a pull box extension.

Where a nontraffic pull box is in the vicinity of curb in an unpaved area, place the box adjacent to the back of the curb if practical.

07-21-17

Where a nontraffic pull box is adjacent to a post or standard, place the box within 5 feet downstream from traffic if practical.

04-15-16

If you replace the cover on a nontraffic pull box, anchor it to the box.

04-20-18

Perform the electronic marker test.

04-15-16

87-1.03C(3) Traffic Pull Boxes

Place minor concrete around and under a traffic pull box.

Bolt the steel cover to the box when not working in it.

Bond the steel cover to the conduit with a jumper and bolt it down after installing the conductors and cables.

87-1.03C(4) Structure Pull Boxes

Bond metallic conduit in a metal pull box in a structure using locknuts, inside and outside of the box, bonding bushings, and bonding jumpers connected to bonding wire running in the conduit system.

04-20-18

87-1.03C(5) Tamper-Resistant Pull Boxes

Install the tamper-resistant pull boxes under the manufacturer's instructions.

04-15-16
04-20-18

87-1.03D Battery Backup System Cabinets

Install the battery backup system cabinet to the right of the Model 332L cabinet.

If installation on the right side is not feasible, obtain authorization for installation on the left side.

Provide access for power conductors between the cabinets using:

1. 2-inch nylon-insulated, steel chase nipple
2. 2-inch steel sealing locknut
3. 2-inch nylon-insulated, steel bushing

Remove the jumper between the terminals labeled *BBS-1* and *BBS-2* in the 5 position terminal block in the controller cabinet before connecting the Department-furnished electronics assembly.

04-15-16

87-1.03E Excavating and Backfilling for Electrical Systems

87-1.03E(1) General

Notify the Engineer at least 72 hours before starting excavation activities.

Dispose of surplus excavated material.

Restrict closures for excavation on a street or highway to 1 lane at a time unless otherwise specified.

87-1.03E(2) Trenching

07-21-17

Dig a trench for the electrical conduits. Do not excavate until the installation of the conduit.

04-15-16

Place excavated material in a location that will not interfere with traffic or surface drainage.

07-21-17

After placing the conduit, backfill the trench with the excavated material.

04-15-16

Compact the backfill placed within the hinge points and in areas where pavement is to be constructed to a minimum relative compaction of 95 percent.

Restore the sidewalks, pavement, and landscaping at a location before starting excavation at another location.

87-1.03E(3) Concrete Pads, Foundations, and Pedestals

Construct foundations for standards, poles, metal pedestals, and posts under section 56-3.

Construct concrete pads, foundations, and pedestals for controller cabinets, telephone demarcation cabinets, and service equipment enclosures on firm ground.

Install anchor bolts using a template to provide proper spacing and alignment. Moisten the forms and ground before placing the concrete. Keep the forms in place until the concrete sets for at least 24 hours to prevent damage to the surface.

Use minor concrete for pads, foundations, and pedestals.

In unpaved areas, place the top of the foundation 6 inches above the surrounding grade, except place the top:

1. 1 foot 6 inches above the grade for Type M and 336L cabinets
2. 1 foot 8 inches above the grade for Type C telephone demarcation cabinets

3. 2 inches above the grade for Type G and Type A cabinets and Type III service equipment enclosures

The pad must be 2 inches above the surrounding grade.

In and adjacent to the sidewalk and other paved areas, place the top of the foundation 4 inches above the surrounding grade, except place the top:

1. 1 foot 6 inches above the grade for Type M and 336L cabinets
2. 1 foot 8 inches above the grade for Type C telephone demarcation cabinets
3. Level with the finished grade for Type G and Type A cabinets and Type III service equipment enclosures

The pad must be level with the finished grade.

Apply an ordinary surface finish under section 51-1.03F.

Allow the foundation to cure for at least 7 days before installing any equipment.

87-1.03F Conductors and Cable Installations

87-1.03F(1) General

The installation of conductors and cables includes splicing conductors and attaching the terminals and connectors to the conductors.

Clean the conduit and pull all conductors and cables as a unit.

If new conductors or cables are to be added in an existing conduit:

1 Remove the content
2. Clean the conduit
3. Pull both old and new conductors and cables as a unit

Wrap conductors and secure cables to the end of the conduit in a pull box.

Seal the ends of conduits with a sealing compound after installing conductors or cables.

Neatly arrange conductors and cables inside pull boxes and cabinets. Tie the conductors and cables together with self-clinching nylon cable ties or enclose them in a plastic tubing or raceway.

Identify conductors and cables by direct labeling, tags, or bands fastened in such a way that they will not move. Use mechanical methods for labeling.

Provide band symbol identification on each conductor or each group of conductors comprising a signal phase in each pull box and near the end of terminated conductors.

Tape the ends of unused conductors and cables in pull boxes to form a watertight seal.

Do not connect the push-button or accessible pedestrian signal neutral conductor to the signal neutral conductor.

04-20-18

Install a continuous tracer throughout the length of the trench.

04-15-16

87-1.03F(2) Cables

87-1.03F(2)(a) General

Reserved

04-20-18

87-1.03F(2)(b) Communication Cables

87-1.03F(2)(b)(i) General

Terminate the ends of the communication cables as shown.

87-1.03F(2)(b)(ii) Category 5E and 6 Cables

Do not splice category 5E and 6 cables between components.

Provide a minimum of 3 feet of slack at each pull box and vault and minimum of 6 feet of slack at the cabinet.

87-1.03F(2)(b)(iii) Telephone Cables

Do not splice telephone cables between the telephone demarcation point and the controller cabinet.

Provide a minimum of 6 feet of slack at each cabinet, including the telephone demarcation cabinet.

04-15-16

87-1.03F(2)(c) Copper Cables

87-1.03F(2)(c)(i) General

Reserved

87-1.03F(2)(c)(ii) Detector Lead-in Cables

Install a Type B or C detector lead-in cable in conduit.

Waterproof the ends of the lead-in cable before installing it in the conduit to prevent moisture from entering the cable.

Splice loop conductors for each direction of travel for the same phase, terminating in the same pull box, to a separate lead-in cable running from the pull box adjacent to the loop detector to a sensor unit mounted in the controller cabinet. Install the lead-in cable without splices except at the pull box when connecting to loop wire.

Verify in the presence of the Engineer that the loops are operational before making the final splices between loop conductors and the lead-in cable.

Identify and tag each lead-in cable with the detector designation at the cabinet and pull box adjacent to the loops.

87-1.03F(2)(c)(iii) Conductors Signal Cables

Do not splice signal cables except for a 28-conductor cable.

Provide identification at the ends of terminated conductors in a cable as shown.

Provide identification for each cable in each pull box showing the signal standard to which it is connected except for the 28-conductor cable.

Connect conductors in a 12-conductor cable as shown in the following table:

12CSC Color Code and Functional Connection

Color code	Termination	Phase
Red	Red signal	2, 4, 6, or 8
Yellow	Yellow signal	2, 4, 6, or 8
Brown	Green signal	2, 4, 6, or 8
Red/black stripe	Red signal	1, 3, 5, or 7
Yellow/black stripe	Yellow signal	1, 3, 5, or 7
Brown/black stripe	Green signal	1, 3, 5, or 7
Black/red stripe	Spare or as required for red or *DONT WALK*	--
Black/white stripe	Spare or as required for yellow	--
Black	Spare or as required for green or *WALK*	--
Red/white stripe	Pedestrian signal *DONT WALK*	--
Brown/white stripe	Pedestrian signal *WALK*	--
White	Terminal block	Neutral

Provide identification for each 28-conductor cable C1 or C2 in each pull box. The cable labeled *C1* must be used for signal phases 1, 2, 3, and 4. The cable labeled *C2* must be used for signal phases 5, 6, 7, and 8.

Connect conductors in a 28-conductor cable as shown in the following table:

28CSC Color Code and Functional Connection

Color code	Termination	Phase
Red/black stripe	Red signal	2 or 6
Yellow/black stripe	Yellow signal	2 or 6
Brown/black stripe	Green signal	2 or 6
Red/orange stripe	Red signal	4 or 8
Yellow/orange stripe	Yellow signal	4 or 8
Brown/orange stripe	Green signal	4 or 8
Red/silver stripe	Red signal	1 or 5
Yellow/silver stripe	Yellow signal	1 or 5
Brown/silver stripe	Green signal	1 or 5
Red/purple stripe	Red signal	3 or 7
Yellow/purple stripe	Yellow signal	3 or 7
Brown/purple stripe	Green signal	3 or 7
Red/2 black stripes	Pedestrian signal *DONT WALK*	2 or 6
Brown/2 black stripes	Pedestrian signal *WALK*	2 or 6
Red/2 orange stripes	Pedestrian signal *DONT WALK*	4 or 8
Brown/2 orange stripes	Pedestrian signal *WALK*	4 or 8
Red/2 silver stripes	Overlap A, C	OLA[a], OLC[a]
Brown/2 silver stripes	Overlap A, C	OLA[c], OLC[c]
Red/2 purple stripes	Overlap B, D	OLB[a], OLD[a]
Brown/2 purple stripes	Overlap B, D	OLB[c], OLD[c]
Blue/black stripe	Pedestrian push button	2 or 6
Blue/orange stripe	Pedestrian push button	4 or 8
Blue/silver stripe	Overlap A, C	OLA[b], OLC[b]
Blue/purple stripe	Overlap B, D	OLB[b], OLD[b]
White/black stripe	Pedestrian push button common	--
Black/red stripe	Railroad preemption	--
Black	Spare	--
White	Terminal block	Neutral

OL = Overlap; A, B, C, and D = Overlapping phase designation
[a]For red phase designation
[b]For yellow phase designation
[c]For green phase designation

Use the neutral conductor only with the phases associated with that cable. Do not intermix neutral conductors from different cables except at the signal controller.

87-1.03F(2)(c)(iv) Signal Interconnect Cable

For a signal interconnect cable, provide a minimum of 6 feet of slack inside each controller cabinet.

Do not splice the cable unless authorized.

If splices are authorized, insulate the conductor splices with heat-shrink tubing and overlap the insulation at least 0.6 inch. Cover the splice area of the cable with heat-shrink tubing and overlap the cable jacket at least 1-1/2 inches. Provide a minimum of 3 feet of slack at each splice.

87-1.03F(3) Conductors

87-1.03F(3)(a) General

Do not run conductors to a terminal block on a standard unless they are to be connected to a signal head mounted on that standard.

Provide 3 spare conductors in all conduits containing ramp metering and traffic signal conductors.

Install a separate conductor for each terminal of a push button assembly and accessible pedestrian signal.

Provide conductor slack to comply with the requirements shown in the following table:

Conductor Slack Requirements

Location	Slack (feet)
Signal standard	1
Lighting standard	1
Signal and lighting standard	1
Pull box	3
Splice	3
Standards with slip base	0

87-1.03F(3)(b) Reserved

87-1.03F(3)(c) Copper Conductors

87-1.03F(3)(c)(i) General

07-21-17

Install a minimum no. 8 grounding copper conductor in conduit and connect it to all-metal components.

04-15-16

Where conductors from different service points occupy the same conduit or standard, enclose the conductors from one of the services in flexible or rigid metal conduit.

87-1.03F(3)(c)(ii) Inductive Loop Conductors

Install a Type 1 or 2 inductive loop conductor except use Type 2 for Type E loop detectors.

Install the conductor without splices except at the pull box.

87-1.03F(4) Manual Installation Method

Use an inert lubricant for placing conductors and cables in conduit.

Pull the conductors and cables into the conduit by hand using pull tape.

04-20-18

87-1.03F(5) Direct Burial Aluminum Cable Installation Method

Install direct burial aluminum cable at a minimum 30 inches below grade in unpaved areas or at a minimum 18 inches below finished grade in paved areas.

Do not splice the direct burial aluminum cable between pull boxes and enclosures.

Fill trench with slurry cement backfill to between 4to 6 inches below finished grade under section 19-3.02E.

Fill the remaining trench to finished grade with native material. In paved area, fill the remaining trench to finished grade with the same material of the paved area.

04-15-16

87-1.03G Equipment Identification Characters

The Engineer provides you with a list of the equipment identification characters.

Stencil the characters or apply the reflective self-adhesive labels to a clean surface.

Treat the edges of self-adhesive characters with an edge sealant.

Place the characters on the side facing traffic on:

1. Front doors of cabinets and service equipment enclosures.
2. Wood poles, fastened with 1-1/4-inch aluminum nails, for pole mounted enclosures
3. Adjacent bent or abutment at approximately the same station as an illuminated sign or soffit luminaire
4. Underside of the structure adjacent to the illuminated sign or soffit luminaire if no bent or abutment exists nearby
5. Posts of overhead signs
6. Standards

Before placing new characters on existing or relocated equipment, remove the existing characters.

04-20-18

For luminaires, place equipment identification character labels outside the unit on the side facing the road. Equipment identification characters consist of:

1. R1 for Roadway 1, R2 for Roadway 2, R3 for Roadway 3, and R4 for Roadway 4
2. Rated wattage

04-15-16

87-1.03H Conductor and Cables Splices

87-1.03H(1) General

You may splice:

1. Grounded conductors in a pull box
2. Accessible pedestrian signal and push bottom conductors in a pull box
3. Ungrounded signal conductors in a pull box if signals are modified
4. Ungrounded signal conductors to a terminal compartment or a signal head on a standard with conductors of the same phase in the pull box adjacent to the standard
5. Ungrounded lighting circuit conductors in a pull box if lighting circuits are modified

07-21-17

Solder all copper conductor splices using the hot iron, pouring, or dipping method. Do not perform open-flame soldering.

04-20-18

Do not solder aluminum conductors.

04-15-16

87-1.03H(2) Splice Insulation Methods

Insulate splices in a multiconductor cable to form a watertight joint and to prevent moisture absorption by the cable.

Use heat-shrink tubing or Method B to insulate a splice.

Use heat-shrink tubing as follows:

1. Cover the splice area completely with an electrical insulating coating and allow it to dry.
2. Place mastic around each conductor before placing them inside the tubing. Use the type of mastic specified in the tubing manufacturer's instructions.
3. Heat the area under the manufacturer's instructions. Do not perform open-flame heating. After contraction, each end of the heat-shrink tubing or the open end of the tubing's end cap must overlap the conductor insulation at least 1-1/2 inches.
4. Cover the entire splice with an electrical insulating coating and allow it to dry.

Use Method B as follows:

1. Cover the splice area completely with an electrical insulating coating and allow it to dry.

04-20-18

2. Apply 3 layers of half-lapped, minimum 60-mils, PVC tape.

04-15-16

3. Apply 2 layers of 120-mils, butyl-rubber, stretchable tape with liner.

04-20-18

4. Apply 3 layers of half-lapped, minimum 6-mils, PVC, pressure-sensitive, adhesive tape.

04-15-16

5. Cover the entire splice with an electrical insulating coating and allow it to dry.

87-1.03I Connectors and Terminals

Apply connectors and terminals to cables and conductors using a crimping compression tool under the manufacturer's instructions. The tool must prevent opening of the handles until the crimp is completed.

Install crimp-style terminal lugs on stranded conductors smaller than no. 14.

07-21-17

Solder no. 8 and smaller copper conductors to connectors and terminal lugs.

04-15-16

87-1.03J Standards, Poles, Pedestals, and Posts

Install standards, poles, pedestals, and posts under section 56-3.

Ground standards with a handhole by attaching a bonding jumper from the bolt or lug inside the standard to a metal conduit or to the grounding wire in the adjacent pull box. The bonding jumper must be visible when the handhole cover is removed.

Ground standards without a handhole or standards with a slip base by attaching a bonding jumper to all anchor bolts using ground clamps and connecting it to a metal conduit or to the grounding wire in the adjacent pull box. The bonding jumper must be visible after mortar has been placed on the foundation.

04-20-18

87-1.03K Piezoelectric Axle Sensors

Obtain authorization for exact locations for installation of the piezoelectric axle sensors.

Cut slots for axle sensors and screened transmission cables under section 87-1.03V(2).

Install the piezoelectric axle sensors in a channel under the manufacturer's instructions. Fill the channel with epoxy grout under section 95-1.02H. The grout must not exceed 165 degrees F while curing. Do not reopen the lane to traffic until the epoxy sets.

Perform the conductor test.

Connect the field wiring to the terminal blocks in the controller cabinet.

Perform the piezoelectric axle sensor test.

Perform the operational test. Failure of the system to record and store data as required for an accumulated time exceeding 3 hours during the 5-day period is cause for the operational test to be rejected and repeated.

04-15-16

87-1.03L Utility Service

87-1.03L(1) General

Install the service equipment early enough to allow the utility to complete its work before completion of the electrical work.

At least 15 days before permanent electrical and telecommunication service is required, request the service connections for permanent installations. The Department arranges with the utilities for completion of the connections and pays all costs and fees required by the utilities.

87-1.03L(2) Electric Service

87-1.03L(2)(a) General

If service equipment is to be installed on a utility-owned pole, furnish and install the conduit, conductors, pull boxes, and other necessary material to complete the service installation. The service utility decides the position of the riser and equipment on the pole.

87-1.03L(2)(b) Electric Service for Irrigation

Establishing electric service for irrigation includes installing conduit, conductors, and pull boxes and making connections from the service point to the irrigation controllers.

87-1.03L(2)(c) Electric Service for Booster Pumps

Establishing electric service for a booster pump includes installing conduit, conductors, and pull boxes and making connections from the service point to the booster pump enclosure.

87-1.03L(3) Telecommunications Service

Establishing telecommunication service includes installing conduit, conductors, and pull boxes and making connections from the service point to the telephone demarcation cabinet.

87-1.03M Photoelectric Controls

Mount the photoelectric unit on the top of the pole for Type I, II, and III photoelectric controls. Use mounting brackets where pole-top mounting is not possible. Orient the photoelectric unit to face north.

Mount the enclosure at a height of 6 feet above finished grade on the same standard as the photoelectric unit.

Install a minimum 100 VA, 480/120 V(ac) transformer in the contactor enclosure to provide 120 V(ac) for the photoelectric control unit when switching 480 V(ac), 60 Hz circuits.

87-1.03N Fused Splice Connectors

04-20-18

Install a fuse splice connector with a fuse:

1. In each ungrounded conductor for luminaires
2 On primary side of transformer when a transformer is installed

07-21-17

The connector must be located in the pull box adjacent to the standard.

04-15-16

Crimp the connector terminals onto the ungrounded conductors using a tool under the manufacturer's instructions. Insulate the terminals and make them watertight.

87-1.03O Grounding Electrodes

Install a grounding electrode for each cabinet, service equipment enclosure, and transformer.

Attach a grounding conductor from the electrode using either a ground clamp or exothermic weld. Connect the other end of the conductor to the cabinet, service equipment enclosure, and transformer.

87-1.03P Service Equipment Enclosures

Installing a service equipment enclosure includes constructing the foundation and pad and installing conduit, adjacent pull boxes, and grounding electrode.

Locate the foundation such that the minimum clearance around the front and back of the enclosure complies with NEC, article 110.26, "Spaces About Electrical Equipment, (600 V, nominal or less)."

Bond and ground metal conduit as specified in NEC and by the service utility except the grounding electrode conductor must be no. 6 or larger.

If circuit breakers and components do not have a description on engraved phenolic nameplates, install them using stainless steel rivets or screws under section 86-1.02P(2).

87-1.03Q Cabinets

87-1.03Q(1) General

Installing a cabinet includes constructing the foundation and pad and installing conduit, adjacent pull boxes, and grounding electrode.

Apply a mastic or caulking compound before installing the cabinet on the foundation to seal the openings.

Connect the field wiring to the terminal blocks in the cabinet. Neatly arrange and lace or enclose the conductors in plastic tubing or raceway. Terminate the conductors with properly sized captive or spring spade terminals. Apply a crimp-style connector and solder them.

Install and solder a spade-type terminal on no. 12 and smaller field conductors and a spade-type or ring-type terminal on conductors larger than no. 12.

87-1.03Q(2) Department-Furnished Controller Cabinets

Arrange for the delivery of Department-furnished controller cabinets.

87-1.03Q(3) Reserved

87-1.03Q(4) Telephone Demarcation Cabinets

Installing a telephone demarcation cabinet includes installing conduit, cable, and pull boxes to the controller cabinet.

Install the cabinet with the back toward the nearest lane of traffic.

87-1.03R Signal Heads

87-1.03R(1) General

Installing a signal head includes mounting the heads on standards and mast arms, installing backplates and visors, and wiring conductors to the terminal blocks.

Keep the heads covered or direct them away from traffic until the system is ready for operation.

87-1.03R(2) Signal Faces

Use the same brand and material for the signal faces at each location.

Program the programmable visibility signal faces under the manufacturer's instructions. The indication must be visible only in those areas or lanes to be controlled.

87-1.03R(3) Backplates

Install backplates using at least six 10-24 or 10-32 self-tapping and locking stainless steel machine screws and flat washers.

If a plastic backplate requires field assembly, attach each joint using at least four no.10 machine screws. Each machine screw must have an integral or captive flat washer, a hexagonal head slotted for a standard screwdriver, and either a locking nut with an integral or captive flat washer or a nut, flat washer, and lock washer. Machine screws, nuts, and washers must be stainless steel or steel with a zinc or black oxide finish.

If a metal backplate has 2 or more sections, fasten the sections with rivets or aluminum bolts peened after assembly to avoid loosening.

Install the backplate such that the background light is not visible between the backplate and the signal face or between sections.

87-1.03R(4) Signal Mounting Assemblies

Install a signal mounting assembly such that its members are arranged symmetrically and plumb or level. Orient each mounting assembly to allow maximum horizontal clearance to the adjacent roadway.

For a bracket-mounted assembly, bolt the terminal compartment or pole plate to the pole or standard.

In addition to the terminal compartment mounting, attach the upper pipe fitting of Type SV-1-T with 5 sections or a SV-2-TD to the standard or pole using the mounting detail for signal heads without a terminal compartment.

Use a 4-1/2-inch slip fitter and set screws to mount an assembly on a post top.

After installing the assembly, clean and paint the exposed threads of the galvanized conduit brackets and bracket areas damaged by the wrench or vise jaws. Use a wire brush to clean and apply 2 coats of unthinned, organic zinc-rich primer. Do not use an aerosol can to apply the primer.

Install the conductors in the terminal compartment and secure the cover.

87-1.03S Pedestrian Signal Heads

Installing a pedestrian signal head includes mounting the heads on standards and wiring conductors to the terminal blocks.

Install the pedestrian signal mounting assembly under section 87-1.03R(4).

Use the same brand and material for the pedestrian signal faces at each location.

Install a pedestrian signal face such that its members are arranged symmetrically and plumb or level.

87-1.03T Accessible Pedestrian Signals

Use the same brand for the accessible pedestrian signals at each location.

Install an accessible pedestrian signal and the R10 series sign on the crosswalk side of the standard.

Attach the accessible pedestrian signal to the standard with self-tapping screws.

Attach the sign to the standard using 2 straps and saddle brackets.

Point the arrow on the accessible pedestrian signal in the same direction as the corresponding crosswalk.

Furnish the equipment and hardware to set up and calibrate the accessible pedestrian signal.

Arrange to have a manufacturer's representative at the job site to program the accessible pedestrian signal with an audible message or tone.

87-1.03U Push Button Assemblies

Install the push button assembly and the R10 series sign on the crosswalk side of the standard.

Attach the sign to the assembly for Type B assemblies.

Attach the sign to the standard using 2 straps and saddle brackets for Type C assemblies.

You may use straps and saddle brackets to secure the push button to the standard.

Use a slip fitter to secure the assembly on top of a 2-1/2-inch-diameter post.

87-1.03V Detectors

87-1.03V(1) General

Installing a detector includes installing inductive loop conductors, sealant, conduit, and pull boxes.

Center the detectors in the traffic lanes.

Do not splice the detector conductor.

87-1.03V(2) Inductive Loop Detectors

Mark the location of the inductive loop detectors such that the distance between the side of the loop and a lead-in saw cut from an adjacent detector is at least 2 feet. The distance between lead-in saw cuts must be at least 6 inches.

Saw cut the slots under section 13-4.03E(7). The bottoms of the slots must be smooth with no sharp edges. For Type E detector loops, saw the slots such that the sides are vertical.

Wash the slots clean using water and blow dry them with compressed air to remove all moisture and debris.

Identify the start of the conductor.

Waterproof the ends of a Type 2 loop conductor before installing it in the conduit to prevent moisture from entering the cable.

Install the loop conductor in the slots and lead-in saw cuts using a 3/16- to 1/4-inch-thick wood paddle. Hold the conductors in place at the bottom of the slot with wood paddles during placement of the sealant.

Wind adjacent loops on the same sensor unit channel in opposite directions.

Twist the conductors for each loop into a pair consisting of a minimum of 2 turns per foot before placing them in the lead-in saw cut and the conduit leading to the pull box. Do not install more than 2 twisted pairs of conductors per lead-in saw cut.

Provide 5 feet of slack in the pull box.

Test each loop for continuity, circuit resistance, and insulation resistance before filling the slots with sealant.

Remove excess sealant from the adjacent road surface before it sets. Do not use solvents to remove the excess.

Identify the loop conductor pair in the pull box, marking the start with the letter *S* and the end with the letter *F*. Band conductors in pairs by lane in the pull box adjacent to the loops and in the cabinet. Identify each pair with the detector designation and loop number.

Install the conductors in a compacted layer of HMA immediately below the uppermost layer if more than one layer will be placed. Install the loop conductors before placing the uppermost layer of HMA. Fill the slot with a sealant flush to the surface.

Install the conductors in the existing pavement if one layer of HMA is to be placed. Install the loop conductors before placing the layer of HMA. Fill the slot with a sealant flush to the surface.

87-1.03V(3) Preformed Inductive Loop Detectors

04-20-18

Install a preformed inductive loop detector consisting of 4 turns in the loop and a lead-in conductor pair twisted at least 2 turns per foot all encased in conduit and sealed to prevent water penetration. The detector must be 6-foot square unless shown otherwise.

Construct the loop detector using a minimum 3/8-inch Schedule 40 or Schedule 80 PVC or polypropylene conduit and no. 16 or larger conductor with Type THWN insulation.

04-15-16

In new roadways, place the detector in the base course with the top of the conduit flush with the top of the base. Cover with HMA or concrete pavement. Protect the detector from damage before and during pavement placement.

In new reinforced concrete bridge decks, secure the detector to the top of the uppermost layer of reinforcing steel using nylon wire ties. Hold the detector parallel to the bridge deck using PVC or polypropylene spacers where necessary. Place conduit for lead-in conductors between the uppermost 2 layers of reinforcing steel.

Do not install detectors in existing bridge decks unless authorized.

Install a detector in existing pavement before placement of concrete or HMA as follows:

04-20-18

1. Saw cut slots at least 1-1/4 inches wide into the pavement.

04-15-16

2. Place the detector in the slots. The top of the conduit must be at least 2 inches below the top of the pavement.
3. Test each loop circuit for continuity, circuit resistance, and insulation resistance.
4. Fill saw cuts with elastomeric or hot melt rubberized asphalt sealant for asphalt concrete pavement and with epoxy sealant or hot melt rubberized asphalt sealant for concrete pavement.

87-1.03W Sealants

87-1.03W(1) General

Reserved

87-1.03W(2) Elastomeric Sealant

Apply an elastomeric sealant with a pressure feed applicator.

87-1.03W(3) Asphaltic Emulsion Sealant

Asphaltic emulsion sealant must:

1. Be used for filling slots in asphalt concrete pavement of a maximum width of 5/8 inch
2. Not be used on concrete pavement or where the slope causes the material to run from the slot
3. Be thinned under the manufacturer's instructions
4. Be placed when the air temperature is at least 45 degrees F

87-1.03W(4) Hot-Melt Rubberized Asphalt Sealant

Melt the sealant in a jacketed, double-boiler-type, melting unit. The temperature of the heat transfer medium must not exceed 475 degrees F.

Apply the sealant with a pressure feed applicator or a pour pot when the surface temperature of the pavement is greater than 40 degrees F.

87-1.03X Reserved

87-1.03Y Transformers

Installing a transformer includes placing the transformer inside a pull box, a cabinet, or an enclosure.

Wire the transformer for the appropriate voltage.

Ground the secondary circuit of the transformer as specified in the NEC.

87-1.03Z Reserved

87-1.04 PAYMENT

Not Used

87-2 LIGHTING SYSTEMS

87-2.01 GENERAL

87-2.01A Summary

Section 87-2 includes specifications for constructing lighting systems.

Lighting system includes:

1. Foundations
2. Pull boxes
3. Conduit
4. Conductors
5. Standards
6. Luminaires
7. Service equipment enclosure
8. Photoelectric control
9. Fuse splice connectors
10. High mast lighting assemblies

The components of a lighting system are shown on the project plans.

87-2.01B Definitions

Reserved

87-2.01C Submittals

Submit a certificate of compliance and test data for the high mast lighting luminaires.

87-2.01D Quality Assurance

Reserved

87-2.02 MATERIALS

87-2.02A General

Reserved

87-2.02B High Mast Lighting Assemblies

A high mast lighting assembly includes the foundation, pole, lowering device system, luminaires, and control pedestal.

Each luminaire in a high mast lighting assembly must include a housing, an optical system, and a ballast.

The housing must be made of aluminum.

A painted or powder-coated housing for a high mast lighting luminaire must be able to withstand a 1,000-hour salt spray test as specified in ASTM B117.

The optical system, consisting of the reflector, refractor or lens, lamp socket, and lamp, must be in a sealed chamber. The chamber must be sealed by a gasket between the reflector and refractor or lens and a gasket between the reflector and lamp socket. The chamber must have a separate filter or filtering gasket for flow of air.

An asymmetrical luminaire must have a refractor or reflector that is rotatable 360 degrees around a vertical axis to orient the distribution of light.

The luminaire must have a slip fitter for mounting on a 2-inch horizontal pipe tenon and must be adjustable ±3 degrees from the axis of the tenon.

The reflector must have a specular surface made of silvered glass or aluminum protected by either an anodized finish or a silicate film. The reflector must be shaped such that a minimum of light is reflected through the arc tube of the lamp.

The refractor and lens must be made of heat-resistant glass.

The lamp socket must be a porcelain-enclosed, mogul-multiple type. The shell must contain integral lamp grips to ensure electrical contact under conditions of normal vibrations. The socket must be rated for 1,500 W, 600 V(ac) and 4,000 V(ac) pulse for a 400 W lamp and 5,000 V(ac) pulse for a 1,000 W lamp.

The luminaire must have a dual fuse holder for 2 fuses rated at 5 A, 480 V(ac). The fuses must be 13/32 inch by 1-1/2 inches, standard midget ferrule type with a nontime-delay feature.

The lamps must be vertical burning, protected from undue vibration, and prevented from backing out of the socket by a stainless steel clamp attached to the luminaire.

A 1,000 W metal halide lamp must have an initial output of 100,000 lumens and an average rated life of 12,000 hours based on 10 hours per start.

A 400 W high-pressure sodium lamp must have an initial output of 50,000 lumens. A 1,000 W high-pressure sodium lamp must have an initial output of 140,000 lumens.

The ballast for the luminaire must be a regulator type and have a core and coils, capacitors, and starting aid.

Ballast must be:

1. Mounted within a weatherproof housing that integrally attaches to the top of a luminaire support bracket and lamp support assembly
2. Readily removable without removing the luminaire from the bracket arm
3. Electrically connected to the optical assembly by a prewired quick disconnect

The ballast for a metal halide luminaire must comply with luminaire manufacturer's specifications.

The wattage regulation spread at any lamp voltage, from nominal through the life of the lamp, must vary no more than 22 percent for a 1,000 W lamp and a ±10 percent input voltage variation. The ballast's starting line current must be less than its operating current.

87-2.02C Soffit and Wall-Mounted Luminaires

87-2.02C(1) General

Soffit and wall-mounted luminaires must be weatherproof and corrosion resistant.

Each luminaire must include a 70 W high-pressure sodium lamp with a minimum average rated life of 24,000 hours. The lamp socket must be positioned such that the light center of the lamp is located within 1/2 inch of the designed light center of the luminaire.

Luminaire wiring must be SFF-2.

Flush-mounted soffit luminaire must have:

1. Metal body with two 1-inch-minimum conduit hubs and a means of anchoring the body into the concrete
2. Prismatic refractor made of heat-resistant polycarbonate:
   2.1. Mounted in a door frame
   2.2. With the street side identified
3. Aluminum reflector with a specular anodized finish
4. Ballast located either within the housing or in a ceiling pull box if shown
5. Lamp socket

The door frame assembly must be hinged, gasketed, and secured to the luminaire body with at least 3 machine screws.

A pendant soffit luminaire must be enclosed and gasketed and have an aluminum finish. Luminaire must have:

1. Aluminum reflector with a specular anodized finish
2. Refractor made of heat-resistant polycarbonate
3. Optical assembly that is hinged and latched for lamp access and a device to prevent dropping
4. Ballast designed for operation in a raintight enclosure
5. Galvanized metal box with a gasketed cover, 2 captive screws, and 2 chains to prevent dropping and for luminaire mounting

Wall-mounted luminaire must have:

1. Cast metal body
2. Prismatic refractor:
   2.1. Made of glass
   2.2. Mounted in a door frame
3. Aluminum reflector with a specular anodized finish
4. Integral ballast
5. Lamp socket
6. Gasket between the refractor and the body
7. At least 2 mounting bolts of minimum 5/16-inch diameter

A cast aluminum body of a luminaire to be cast into or mounted against concrete must have a thick coat of alkali-resistant bituminous paint on all surfaces to be in contact with the concrete.

87-2.02C(2) High-Pressure Sodium Lamp Ballasts

87-2.02C(2)(a) General

A high-pressure sodium lamp ballast must operate the lamp for its rated wattage.

Starting aids for a ballast must be interchangeable between ballasts of the same wattage and manufacturer without adjustment.

The ballast must be provided with a heat-generating component to serve as a heat sink. The capacitor must be placed at the maximum practicable distance from the heat-generating components or thermally shielded to limit the case temperature to 75 degrees C.

The transformer and inductor must be resin impregnated for protection against moisture. Capacitors, except for those in starting aids, must be metal cased and hermetically sealed.

The ballast must have a power factor of 90 percent or greater.

For the nominal input voltage and lamp voltage, the ballast design center must not vary more than 7.5 percent from the rated lamp wattage.

87-2.02C(2)(b) Regulator-Type Ballasts

A regulator-type ballast must be designed such that a capacitance variance of ±6 percent does not cause more than ±8 percent variation in the lamp wattage regulation.

The ballast must have a current crest factor not exceeding 1.8 for an input voltage variation of ±10 percent.

The lamp wattage regulation spread for a lag-type ballast must not vary by more than 18 percent for ±10 percent input voltage variations. The primary and secondary windings must be electrically isolated.

The lamp wattage regulation spread for a constant-wattage, autoregulator, lead-type ballast must not vary by more than 30 percent for ±10 percent input voltage variations.

87-2.02C(2)(c) Nonregulator-Type Ballasts

A nonregulator-type ballast must have a current crest factor not exceeding 1.8 for an input voltage variation of ±5 percent.

The lamp wattage regulation spread for an autotransformer or high reactance type ballast must not vary by more than 25 percent for ±5 percent input voltage variations.

87-2.03 CONSTRUCTION

87-2.03A General

Set the foundations for standards such that the mast arm is perpendicular to the centerline of the roadway.

Tighten the cap screws of the luminaire's clamping bracket to 10 ft-lb for LED and low-pressure luminaires.

Label the month and year of the installation inside the luminaire housing's door.

Perform the conductor and operational tests for the system.

87-2.03B High Mast Lighting Assemblies

Mount and connect the luminaires to the accessory support ring. Aim the asymmetrical luminaire to orient the distribution of light.

87-2.03C Soffit and Wall-Mounted Luminaires

For a flush-mounted soffit luminaire:

1. Prevent concrete from getting into the housing during pouring of the concrete for the structure
2. Install the luminaire with the axis vertical and the street side of the refractor oriented as indicated
3. Locate the luminaire to provide a minimum 2-foot clearance from the inside surface of the girders and 1-foot clearance from the near face of the diaphragm
4. Install the bridge soffit and ceiling pull box over the same lane

For a pendant soffit luminaire:

1. Cast in place the inserts for the no. 8 pull box during concrete placement for a new structure
2. Drill holes for expansion anchors to support the no. 8 pull box on existing structures
3. Bond the suspension conduit and luminaire to the pull box

For a wall-mounted luminaire, provide:

1. Extension junction box or ring on a new structure
2. 4 external mounting taps on an existing structure

Place the soffits or wall-mounted luminaires in operation as soon as practicable after the falsework has been removed from the structure.

If the Engineer orders soffit or wall-mounted luminaires to be activated before permanent power service is available, installing and removing the temporary power service is change order work.

87-2.04 PAYMENT

Not Used

87-3 SIGN ILLUMINATION SYSTEMS

87-3.01 GENERAL

87-3.01A Summary

Section 87-3 includes specifications for constructing sign illumination systems.

Sign illumination system includes:

1. Foundations
2. Pull boxes
3. Conduit
4. Conductors
5. Sign lighting fixtures
6. Enclosure for the disconnect circuit breaker
7. Service equipment enclosure
8. Photoelectric control

The components of a sign illumination system are shown on the project plans.

87-3.01B Definitions

Reserved

87-3.01C Submittals

Submit the manufacturer's test data for the induction sign-lighting fixtures.

87-3.01D Quality Assurance

Reserved

87-3.02 MATERIALS

An induction sign-lighting fixture must include a housing with a door, reflector, refractor or lens, lamp, socket assembly, power coupler, high-frequency generator, fuse block, and fuses.

The fixture must comply with the isofootcandle curves as shown.

Fixture must weigh no more than 44 lb, be rated for 87 W at 120/240 V(ac), and have a mounting assembly made of one of the following materials:

1. Cast aluminum
2. Hot-dip galvanized steel plate
3. Galvanized steel plate finished with one of the following:
   3.1. Polymeric coating
   3.2. Same finish used for the housing

Housing must:

1. Be corrosion resistant and suitable for wet locations
2. Be above the top of the mounting rails at a maximum height of 12 inches
3. Have weep holes

Door must:

1. Hold a refractor or lens
2. Open without the use of special tools
3. Have a locking position at 50 degrees minimum from the plane of the door opening
4. Be hinged to the housing on the side of the fixture away from the sign panel
5. Have 2 captive latch bolts or other latching device

When the door is opened, it must lock in the 50 degrees position when an 85 mph, 3-second wind-gust load strikes the door from either side.

The housing and door must be manufactured of sheet or cast aluminum and have a gray powder coat or polyester paint finish. The sheet aluminum must comply with ASTM B209 or B209M for 5052-H32 aluminum sheet. External bolts, screws, hinges, hinge pins, and door closure devices must be corrosion resistant.

The housing and door must be gasketed. The thickness of the gasket must be a minimum of 1/4 inch.

Reflector must not be attached to the outside of the housing and must be:

1. Made of a single piece of aluminum with a specular finish
2. Protected with an electrochemically applied anodized finish or a chemically applied silicate film
3. Designed to drain condensation away from it
4. Secured to the housing with a minimum of 2 screws
5. Removable without removing any fixture parts

Refractor or lens must have a smooth exterior and must be manufactured from the materials shown in the following table:

Refractor and Lens Material Requirements

Component	Material
Flat lens	Heat-resistant glass
Convex lens	Heat-resistant, high-impact-resistant tempered glass
Refractor	Borosilicate heat-resistant glass

The refractor and convex lens must be designed or shielded such that no luminance is visible if the fixture is approached directly from the rear and viewed from below. If a shield is used, it must be an integral part of the door casting.

Lamp must:

1. Be an 85 W induction type with a fluorescent, phosphor-coated, interior wall
2. Have a minimum 70 percent light output of its original lumen output after 60,000 hours of operation
3. Have a minimum color-rendering index of 80
4. Be rated at a color temperature of 4,000K
5. Be removable with common hand tools

The lamp socket must be rated for 1,500 W and 600 V(ac) and be a porcelain-enclosed mogul type with a shell that contains integral lamp grips to ensure electrical contact under normal vibration conditions. The shell and center contact must be made of nickel-plated brass. The center contact must be spring loaded.

The power coupler must be removable with common hand tools.

High-frequency generator must:

1. Start and operate lamps at an ambient temperature of -25 degrees C or greater for the rated life of the lamp
2. Operate continuously at ambient air temperatures from -25 to 55 degrees C without a reduction in the generator life
3. Have a design life of at least 100,000 hours at 55 degrees C
4. Have an output frequency of 2.65 MHz ± 10 percent
5. Have radio frequency interference that complies with 47 CFR 18 regulations regarding harmful interference
6. Have a power factor greater than 90 percent and total harmonic distortion less than 10 percent

The high frequency generator must be mounted such that the fixture can be used as a heat sink and be replaceable with common hand tools.

Each fixture must include a barrier-type fuse block for terminating field connections. Fuse block must:

1. Be rated 600 V(ac)
2. Have box terminals
3. Be secured to the housing and accessible without removal of any fixture parts
4. Be mounted to leave a minimum of 1/2 inch of air space from the sidewalls of the housing
5. Be designed for easy removal of fuses with a fuse puller

The fixture's fuses must be 13/32-inch-diameter, 1-1/2-inch-long ferrule type and UL listed or NRTL certified. For a 120 V(ac) fixture, only the ungrounded conductor must be fused and a solid connection must be provided between the grounded conductor and the high frequency generator.

The fixture must be permanently marked with the manufacturer's brand name, trademark, model number, serial number, and date of manufacture on the inside and outside on the housing. The same information must be marked on the package.

If a wire guard is used, it must be made of a minimum 1/4-inch-diameter galvanized steel wire. The wires must be spaced to prevent rocks larger than 1-1/2-inch diameter from passing through the guard. The guard must be either hot-dip galvanized or electroplated zinc-coated as specified in ASTM B633, service condition SC4, with a clear chromate dip treatment.

87-3.03 CONSTRUCTION

Perform the conductor and operational tests for the system.

87-3.04 PAYMENT

Not Used

87-4 SIGNAL AND LIGHTING SYSTEMS

87-4.01 GENERAL

87-4.01A Summary

Section 87-4 includes specifications for constructing signal and lighting systems.

Signal and lighting system includes:

1. Foundations
2. Pull boxes
3. Conduit

04-20-18

4. Conductors and cables
5. Standards
6. Signal heads
7. Internally illuminated street name signs
8. Service equipment enclosure
9. Department-furnished controller assembly
10. Detectors
11. Telephone demarcation cabinet
12. Accessible pedestrian signals
13. Push button assemblies
14. Pedestrian signal heads
15. Luminaires
16. Photoelectric control
17. Fuse splice connectors
18. Battery backup system
19. Flashing beacons
20. Flashing beacon control assembly

04-15-16

The components of a signal and lighting system are shown on the project plans.

87-4.01B Definitions

Reserved

87-4.01C Submittals

Submit shop drawings showing the message for each internally illuminated street sign, including the size of letters, symbols, and arrows.

87-4.01D Quality Assurance

87-4.01D(1) General

Reserved

87-4.01D(2) Quality Control

87-4.01D(2)(a) General

Reserved

87-4.02 MATERIALS

87-4.02A General

Reserved

87-4.02B Reserved

87-4.02C Internally Illuminated Street Name Signs

An internally illuminated street name sign includes housing, brackets, sign panels, gaskets, ballast, lampholder, terminal blocks, conductors, and fuses.

An internally illuminated street sign must be designed and constructed to prevent deformation or failure when subjected to an 85 mph, 3-second wind-gust load as specified in the AASHTO publication, "Standard Specifications for Structural Supports of Highway Signs, Luminaires and Traffic Signals."

Sign must:

1. Be Types A or B
2. Have galvanized or cadmium-plated ferrous parts
3. Have screened weep holes
4. Have fasteners, screws, and hardware made of passive stainless steel, Type 302 or 304, or aluminum Type 6060-T6
5. Operate at a temperature from -20 to 74 degrees C

Photoelectric unit sockets are not allowed.

The housing must be constructed to resist torsional twist and warp. The housing must be designed such that opening or removing the panels provides access to the interior of the sign for lamp, ballast, and fuse replacement.

The top and bottom of the sign must be manufactured from formed or extruded aluminum and attached to formed or cast aluminum end fittings. The top, bottom, and end fittings must form a sealed housing.

For a Type A sign, both sides of the sign must be hinged at the top to allow installation or removal of the sign panel.

For a Type B sign, the sign panel must be slide mounted into the housing.

The top of the housing must have 2 free-swinging mounting brackets. Each bracket must be vertically adjustable for leveling the sign to either a straight or curved mast arm. The bracket assembly must allow the lighting fixture to swing perpendicular to the sign panel.

The reflectors must be formed aluminum and have an acrylic, baked-white-enamel surface with a minimum reflectance of 0.85.

Sign panel must be translucent, high-impact-resistant, and made of one of the following plastic materials:

1. Glass-fiber-reinforced, acrylated resin

2. Polycarbonate resin
3. Cellulose acetate butyrate

The sign panel must be designed not to crack or shatter if a 1-inch-diameter steel ball weighing 2.4 ounces is dropped from a height of 8.5 feet above the sign panel to any point on the panel. For this test, the sign panel must be lying in a horizontal position and supported within its frame.

The sign panel's surface must be evenly illuminated. The brightness measurements for the letters must be a minimum of 150 foot-lamberts, average. The letter-to-background brightness ratio must be from 10:1 to 20:1. The background luminance must not vary by more than 40 percent from the average background brightness measurement. The luminance of letters, symbols, and arrows must not vary by more than 20 percent from their average brightness measurement.

The sign panel's white or green color must not fade or darken if exposed to an accelerated test of UV light equivalent to 2 years of outdoor exposure.

The sign panel's legend, symbols, arrows, and border on each face must be white on a green background. The background must comply with color no. 14109 of FED-STD-595.

The message must appear on both sides of the sign and be protected from UV radiation. The letters must be 8-inch upper case and 6-inch lower case, series E.

A Type A sign must have a closed-cell, sponge-neoprene gasket installed between the sign panel frame to prevent the entry of water. The gasket must be uniform and even textured.

The sign ballast must be a high-power-factor type for outdoor operation from 110 to 125 V(ac) and 60 Hz and must comply with ANSI C82.1 and C82.2.

The ballast for a Type A sign must be rated at 200 mA. The ballast for a Type B sign must be rated at 430 mA.

Sign lampholder must:

1. Be the spring-loaded type
2. Have silver-coated contacts and waterproofed entrance leads
3. Have a heat-resistant, circular cross section with a partially recessed neoprene ring

Removal of the lamp from the socket must de-energize the primary of the ballast.

The springs for the lampholders must not be a part of the current-carrying circuit.

The sign's wiring connections must terminate on a molded, phenolic, barrier-type, terminal block rated at 15 A, 1,000 V(ac). The connections must have a white, integral, waterproof marking strip. The terminal screws must not be smaller than a no. 10.

The terminal block must be insulated from the fixture to provide protection from the line-to-ground flashover voltage.

A sectionalized terminal block must have an integral barrier on each side and must allow rigid mounting and alignment.

Fixture's conductors must:

1. Be stranded copper wire with a minimum thermoplastic insulation of 28 mils
2. Be rated at 1,000 V(ac) and for use up to 90 degrees C
3. Be a minimum of no. 16
4. Match the color coding of the ballast leads
5. Be secured with spring cross straps, installed 12 inches apart or less in the chassis or fixture

Stranded copper conductors connected to screw-type terminals must terminate in crimp-type ring connectors.

No splicing is allowed within the fixture.

The sign's fuse must be the Type 3AG, miniature, slow-blow type.

The fuse holder must be a panel-mounting type with a threaded or bayonet knob that grips the fuse tightly for extraction. Each ballast must have a separate fuse.

87-4.03 CONSTRUCTION

87-4.03A General

Set the foundations for standards such that the mast arm is perpendicular to the centerline of the roadway.

Tighten the cap screws of the luminaire's clamping bracket to 10 ft-lb for LED and low-pressure luminaires.

Label the month and year of the installation inside the luminaire housing's door.

Perform the conductor and operational tests for the system.

87-4.03B Reserved

87-4.03C Internally Illuminated Street Name Signs

Mount the internally illuminated street name sign to the signal mast arm using the adjustable brackets. Connect the conductors to the terminal blocks in the signal head mounting terminal block.

87-4.04 PAYMENT

Not Used

87-5 RAMP METERING SYSTEMS

87-5.01 GENERAL

Section 87-5 includes specifications for constructing ramp metering systems.

Ramp metering system includes:

1. Foundations
2. Pull boxes
3. Conduit
4. Conductors
5. Standards
6. Signal heads
7. Service equipment enclosure
8. Department-furnished controller assembly
9. Detectors
10. Telephone demarcation cabinet

The components of a ramp metering system are shown on the project plans.

87-5.02 MATERIALS

Not Used

87-5.03 CONSTRUCTION

Connect the field wiring to the terminal blocks in the controller cabinet. The Engineer provides you a list of field conductor terminations for each controller cabinet.

Perform the conductor and operational tests for the system.

87-5.04 PAYMENT

Not Used

87-6 TRAFFIC MONITORING STATION SYSTEMS

87-6.01 GENERAL

Section 87-6 includes specifications for constructing traffic monitoring station systems.

Traffic monitoring station system includes:

1. Foundations
2. Pull boxes
3. Conduit
4. Cables
5. Conductors
6. Service equipment enclosure
7. Controller cabinet
8. Detectors
9. Telephone demarcation cabinet

The components of a traffic monitoring station system are shown on the project plans.

87-6.02 MATERIALS

Not Used

87-6.03 CONSTRUCTION

Connect the field wiring to the terminal blocks in the controller cabinet. The Engineer provides you a list of field conductor terminations for the controller cabinet.

Perform the conductor and operational tests for the system.

87-6.04 PAYMENT

Not Used

87-7 FLASHING BEACON SYSTEMS

87-7.01 GENERAL

Section 87-7 includes specifications for constructing flashing beacon systems.

Flashing beacon system includes:

1. Foundations
2. Pull boxes
3. Conduit
4. Conductors
5. Standards
6. Service equipment enclosure
7. Signal heads
8. Flashing beacon control assembly

The components of a flashing beacon system are shown on the project plans.

The flash rate for the flashing beacon must comply with chapter 4L, "Flashing Beacons," of the *California MUTCD*.

The flashing beacon must allow alternating flashing wig-wag operation.

The flashing beacon must have a separate flasher unit installed in the flashing beacon control assembly.

87-7.02 MATERIALS

Flashing beacon control assembly must:

1. Have a NEMA 3R enclosure with a dead front panel and a hasp with a 7/16-inch hole for a padlock. The enclosure must have one of the following finishes:
   1.1. Powder coating.
   1.2. Hot-dip galvanized coating.
   1.3. Factory-applied, rust-resistant prime coat and finish coat.
2. Have barrier-type terminal blocks rated for 25 A, 600 V(ac), made of molded phenolic or nylon material and have plated-brass screw terminals and integral marking strips.
3. Include a solid state flasher complying with section 8 of NEMA standards publication no. TS 1 for 10 A, dual circuits.

87-7.03 CONSTRUCTION

Perform the conductor and operational tests for the system.

87-7.04 PAYMENT

Not Used

04-20-18

87-8 PEDESTRIAN HYBRID BEACON SYSTEMS

87-8.01 GENERAL

87-8.01A Summary

Section 87-8 includes specifications for constructing pedestrian hybrid beacon systems.

A pedestrian hybrid beacon system includes:

1. Foundations
2. Pull boxes
3. Conduit
4. Conductors and cables
5. Standards
6. Pedestrian hybrid beacon face
7. Pedestrian signal heads
8. Service equipment enclosure
9. Department-furnished controller assembly
10. Accessible pedestrian signals
11. Push button assemblies
12 Luminaires
13 Fuse splice connectors
14. Battery backup system

87-8.01B Definitions

Reserved

87-8.01C Submittals

Reserved

87-8.01D Quality Assurance

87-8.01D(1) General

Reserved

87-8.01D(2) Quality Control

Verify the sequence for the pedestrian hybrid beacon system per California Chapter 4F, Figure 3F-3 "Sequence for a Pedestrian Hybrid Beacon" during the operational test.

87-8.02 MATERIALS

87-8.02A General

The system must comply with California *MUTCD*, Chapter 4F.

87-8.02B Pedestrian Hybrid Beacon Face

A pedestrian hybrid beacon face consists of 3 12-inch signal heads.

87-8.03 CONSTRUCTION

Install pedestrian hybrid beacon system under sections 87-4.03A and 87-4.03B.

87-8.04 PAYMENT

Not Used

04-15-16

87-9–87-11 RESERVED

87-12 CHANGEABLE MESSAGE SIGN SYSTEMS

87-12.01 GENERAL

Section 87-12 includes specifications for constructing changeable message sign systems.

Changeable message sign system includes:

1. Foundations
2. Pull boxes
3. Conduit

04-20-18

4. Conductors and cables
5. Service equipment enclosure
6. Department-furnished controller cabinet
7. Department-furnished changeable message sign
8. Department-furnished wiring harness
9. Sign disconnect

04-15-16

The components of a changeable message sign system are shown on the project plans.

87-12.02 MATERIALS

Not Used

87-12.03 CONSTRUCTION

Install the changeable message sign.

Connect the field wiring to the terminal blocks in the sign assembly and controller cabinet.

The Engineer provides you a list of field conductor terminations for each sign cabinet and controller cabinet.

The Department maintains the sign assemblies.

87-12.04 PAYMENT

Not Used

87-13 RESERVED

04-20-18

87-14 RADAR SPEED FEEDBACK SIGN SYSTEMS

87-14.01 GENERAL

87-14.01A Summary

Section 87-14 includes specifications for installing radar speed feedback sign systems.

Radar speed feedback sign system includes:

1. Foundations
2. Pull boxes
3. Conduit
4. Conductors and cables
5. Standards or wood posts
6 Vehicle speed feedback sign
7. Service equipment enclosure

The components of a radar speed feedback sign system are shown on the project plans.

87-14.01B Definitions

Not Used

87-14.01C Submittals

Submit 2 copies of:

1. Test data report complying with NEMA-TS-2 for the vehicle speed feedback sign
2. Shop drawings or installation manuals for the sign support, electrical connections, attachments, and mounting configurations

87-14.01D Quality Assurance

87-14.01D(1) General

Not Used

87-14.01D(2) Quality Control

Equipment setup must comply with the sign manufacturer's instructions.

Notify the Engineer at least 5 business days before performing the system test. Test the system in the presence of the Engineer.

Radar speed feedback sign system test consists of:

1. Turning on the radar speed feedback sign system
2 Driving a vehicle and recording the speeds displayed:
   2.1 By the vehicle speedometer
   2.2 On the vehicle speed feedback sign for the vehicles
3. Performing the test 5 times per lane detected
4. Ensuring that the 5 recorded speeds of the vehicle speed feedback sign are within ± 1 mph of the vehicle speeds recorded from the vehicle speedometer

After successful testing, present the recorded results to the Engineer.

87-14.01D(3) Training

Provide training to a maximum of 4 Department employees on the operation of the vehicle speed feedback sign. Training must be a minimum of 1 hour and include how to program, adjust, troubleshoot, and repair the sign.

87-14.02 MATERIALS

87-14.02A General

Not Used

87-14.02B Vehicle Speed Feedback Signs

Vehicle speed feedback sign consists of a housing, display window, and radar unit.

Sign must:

1. Comply with the California MUTCD, Chapter 2B
2. Have an operating voltage of 120 V(ac) for permanent installations
3. Have a maximum weight of 45 lb
4. Have a wind load rating of 90 mph
5. Have an operating temperature range from -34 to 165 degrees F
6. Have a retroreflective white sheeting background

87-14.02B(1) Housings

Housing must:

1. Be weather proof (NEMA 3R or better) and vandal resistant
2. Be made of 0.09-inch-gauge welded aluminum with the outer surfaces being UV resistant
3. Have the manufacturer's name, model number, serial number, date of manufacture, rated voltage and rated current marked inside
4. Have the internal components easily accessible for field repair without removal of the sign

87-14.02B(2) Display Windows

Display window consists of a cover, LED character display, and dimming control. Character display and cover must deflect together without damage to the internal electronics and speed detection components.

87-14.02B(2)(a) Covers

Cover must be:

1. Vandal resistant and shock absorbent
2. Field replaceable with the removal of external stainless-steel, tamper proof fasteners

Cover must be made of a minimum .25-inch-thick, shatter-resistant polycarbonate.

87-14.02B(2)(b) LED Character Displays

LED character display must:

1. Consist of two 7-segment, solid-state, numeric characters
2. Be capable of displaying the detected vehicle speed within 1 second
3. Remain blank when no vehicles are detected within the radar detection zone
4. Have the option to flash the pre-set speed limit when the detected vehicle speed is 5 miles higher than the pre-set speed
5. Be viewable only by the approaching traffic

Characters must:

1. Be a minimum 15 inches in height
2. Be visible and legible from a minimum distance of 1500 feet and legible from a minimum distance of 750 feet
3. Consist of a minimum 16 LEDs

LEDs must:

1. Be amber and have a wavelength from 590 to 600 nm andrated for minimum 100,000 hours
2. Must maintain a minimum 85 percent of the initial light output after 48 months of continuous use over the temperature range

87-14.02B(2)(c) Dimming Controls

Dimming control must:

1. Automatically adjust the character light intensity to provide optimum character visibility and legibility under all ambient lighting conditions
2. Have minimum 3 manual dimming modes of different intensities

87-14.02B(3) Radar Units

Radar unit must:

1. Be able to detect up to 3 lanes of approaching traffic
2. Operate with an internal, low power, 24.159 GHz (K-band)
3. Be FCC approved Part 15 certified
4. Have a speed accuracy of ±1 mph
5 Have a maximum 15W power consumption

87-14.03 CONSTRUCTION

Install the vehicle speed feedback sign under the manufacturer's instructions.

Perform the conductor test.

Configure the radar speed feedback sign system to detect only traffic in the approach direction of travel.

Perform the radar speed feedback sign system test.

Perform the operational test for the system.

87-14.04 PAYMENT

Not Used

04-15-16

87-15–87-17 RESERVED

87-18 INTERCONNECTION CONDUIT AND CABLE

87-18.01 GENERAL

Section 87-18 includes specifications for constructing interconnection conduit and cable.

Interconnection conduit and cable includes:

1. Pull boxes
2. Conduit
3. Signal interconnect cables

The components of an interconnection conduit and cable are shown.

87-18.02 MATERIALS

Not Used

87-18.03 CONSTRUCTION

Test the signal interconnect cable.

Connect the signal interconnect cable to the terminal block in the controller cabinets. The Engineer provides you a list of terminations for each controller cabinet.

87-18.04 PAYMENT

Not Used

04-20-18

87-19 FIBER OPTIC CABLE SYSTEMS

87-19.01 GENERAL

87-19.01A Summary

Section 87-19 includes specifications for constructing fiber optic cable systems.

A fiber optic cable system includes:

1. Conduit and accessories
2. Splice vaults
3. Warning tape
4. Fiber optic cables
5. Fiber optic splice enclosures
6. Fiber distribution units
7. Fiber optic markers
8 Fiber optic connectors and couplers

The components of a fiber optic system are shown on the project plans.

87-19.01B Definitions

Reserved

87-19.01C Submittals

At least 15 days before cable installation, submit:

1. Manufacturer’s procedures for pulling fiber optic cable
2. Test reports from a laboratory accredited to International Standards Organization/International Electrotechnical Commission 17025 by the American Association for Laboratory Accreditation (A2LA) or the ANSI-ASQ National Accreditation Board (ANAB) for:
   - 2.1. Water penetration
   - 2.2. Cable temperature cycling

   2.3. Cable impact
   2.4. Cable tensile loading and fiber strain
   2.5. Cable compressive loading
   2.6. Compound flow
   2.7. Cyclic flexing
3. Proof of calibration for the test equipment including:
   3.1. Name of calibration facility
   3.2. Date of calibration
   3.3. Type of equipment, model number and serial number
   3.4. Calibration result

Submit the data file and software from the OTDR with the test results for all OTDR tests. The software must support Windows computer operating systems.

After performing the OTDR and the power meter and light source tests, submit within 4 business days:

1. Cable Verification Worksheet
2. Segment Verification Worksheet
3. Link Loss Budget Worksheet

The worksheets are available at the Division of Construction website and copies are included in the *Information Handout*. Submittals must be in Microsoft Excel format. Include hard copies and copies in an electronic format.

87-19.01D Quality Assurance

87-19.01D(1) General

Reserved

87-19.01D(2) Quality Control

Notify the Engineer 4 days before performing field tests. Include exact location of the system or components to be tested. Do not proceed with the testing until authorized. Perform each test in the presence of the Engineer.

The OTDR test consists of:

1. Inspecting the cable segment for physical damage.
2. Measuring the attenuation levels for wavelengths of 1310 nm and 1550 nm in both directions for each fiber using a light source at one end and OTDR at the other end.
3. Comparing the test results with the data sheet provided with the shipment. If there are attenuation deviations greater than 5 percent, the test will be considered unsatisfactory and the cable segment will be rejected. The failure of any single fiber is a cause for rejection of the entire segment. Replace any rejected cable segments and repeat the test.

The power meter and light source test consists of:

1. Testing each fiber in a link using a light source at one end of the link and a power meter at the other end
2. Measuring and recording the power loss for wavelengths of 1310 nm and 1550 nm in both directions

Index matching gel is not allowed in connectors during power meter and light source test.

Test results must be generated from test equipment software and recorded, compared and proven to be within the calculated link loss budget, and filed with the other recordings of the same link.

Installation and splicing of the fiber optic cable system must be performed by a certified fiber optic installer.

The OTDR test and the power meter and light source test must be performed by a certified fiber optic technician.

The certification for the fiber optic installer and fiber optic technician must be from an organization recognized by the International Certification Accreditations Council and must be current through the installation of the fiber optic system.

87-19.02 MATERIALS

87-19.02A General

All metal components of the fiber optic cable system must be corrosion resistant.

All connectors must be factory-installed and tested.

Patch cords, pigtails and connectors must comply with ANSI/TIA-568.

Pigtails must have a minimum 80 N pull out strength.

Each cable reel must be labeled as specified in ANSI/ICEA S-87-640 including:

1. Contractor's name
2. Contract number
3. Cable diameter
4. Number of fibers
5. Cable attenuation loss per fiber at 1310 nm and 1550 nm

The information must be on a weatherproof label or tag and in a shipping record in a weatherproof envelope. The envelope must be removed only by the Engineer.

87-19.02B Splice Vaults

A splice vault must:

1. Comply with section 86 1.02C, AASHTO HS 20-44 and AASHTO M 306.
2. Be a minimum of 4 feet wide by 4 feet high by 4 feet long nominal inside dimensions or a minimum of 4 feet outside diameter for round splice vaults.
3. Be precast either modular or monolithic.
4. Have cable racks installed on the interior sides. A rack must:
   - 4.1. Be fabricated from ASTM A36 steel plate
   - 4.2 Support a minimum of 100 pounds per rack arm.
   - 4.3 Support a minimum of 4 splice enclosures and a minimum of 4 cables with a minimum slack of 50 feet each.
   - 4.4 Be hot-dip galvanized after manufacturing.
   - 4.5 Be bonded and grounded.
5. Have a minimum of 4 knockouts for cable entry points. Entry points must not cause the cable to exceed its maximum bend radius.
6. Have a minimum 2 inch diameter drain hole at the base.
7. Be weatherproof.
8. Have cable accesses with rubber grommets or similar material to prevent the cable from coming in contact with the bare metal.

The cover must:

1. Be in two-piece torsion-assisted sections for non-rounded enclosures.
2. Be galvanized steel with a minimum of 30 inches diameter for round enclosures.
3. Have inset lifting pull slots.
4. Have markings "CALTRANS FIBER OPTIC" on each section.

87-19.02C Fiber Optic Cable

The fiber optic cable must:

1. Comply with 7 CFR 1755.900 to 1755.902 and ANSI/ICEA S-87-640
2. Be a single mode, zero-dispersion, and have non-gel loose type buffer tubes
3. Have no splices, including factory splices

4. Have a Type H or Type M outer jacket

The fiber optic cable must:

1. Be shipped on a reel
2. Have 10 feet of length on each end of the cable accessible for testing

The fiber optic riser cable must:

1. Comply with ICEA S-104-696
2. Be rated for underground and riser application
3. Have a minimum of 4 fibers.
4. Be singlemode and operate at wavelengths of 1310 and 1550 nanometers

Fiber optic cable must be identified as shown in the following table:

Cable Identification

No.	Description	Code
1	Fiber Type	**S:** Singlemode
2	Fiber Count	**048 (example):** Actual number of fibers
3	Begin Point	T: TMC H: Hub V: Video Node D: Data Node C: Cable Node TV: CCTV Camera CM: CMS E: Traffic Signal RM: Ramp Meter TM: Traffic Monitoring/ Count Station/Vehicle Count Station (VDS, TMS) HA: Highway Advisory Radio EM: Extinguishable Message Sign RW: Roadway Weather Information System WM: Weigh In Motion WS: Weigh-Station Bypass System SV: Splice Vault or Fiber Optic Vault SC: Splice Cabinet
4	Begin Point County Abbreviation	Examples: Orange (Ora), San Mateo (SM). County abbreviations are available Plans Preparation Manual at Division of Design website.
5	Begin Point Route Number	Examples 005, 082, 114
6	Begin Point Post Mile	02470 (example 024.70): Actual PM value to the 1/100 value
7	End Point	In the same manner as for Begin Point
8	End Point County Abbreviation	
9	End Point Route Number	
10	End Point Post Mile	

87-19.02D Fiber Optic Splice Enclosures

A fiber optic splice enclosure must:

1. Be a maximum of 36 by 8 inches

2. Be thermoplastic, weather proof, chemical and UV resistant, and resealable
3. Accommodate a minimum of 8 internal splice trays
4. Have 1/4 to 1 inch diameter cable entry ports to accommodate cables as shown
5. Have brackets, clips and cable ties
5. Have means to anchor the dielectric member of the fiber optic cable
6. Include grounding hardware

87-19.02E Fiber Distribution Units

The Fiber Distribution Unit (FDU) consists of a housing, a patch panel, a 12 multicolor pigtail, and a splice tray.

The FDU must be self-contained and pre-assembled.

The housing must:

1. Be a 19-inch rack mountable modular metal enclosure
2. Be a one rack unit
3. Have cable clamps to secure fiber optic cables to the chassis
4. Have cable accesses with rubber grommets or similar material to prevent the cable from coming in contact with the bare metal
5. Be weatherproof
6. Have a hinged top door with a latch or thumbscrew to hold it in the closed position

A patch panel must have a minimum of 12 single-fiber type connector sleeves.

A pigtail must:

1. Be a simplex single mode fiber in a 900 µm tight buffer with a 0.12 inch outer diameter PVC jacket
2. Have a fiber optic connector attached on one end and bare fiber on the other end
3. Be at least 3 feet in length
4. Have the manufacturer's part number on the jacket

Pigtails must be single-fiber or ribbon type.

Patch cords must:

1. Be a single mode fiber in a 900 µm tight buffer with a 0.12 inch outer diameter PVC jacket
2. Have fiber optic connectors attached on both ends
3. Be at least 6 feet in length
4. Have manufacturer's part number on the jacket

Duplex patch cords must be of round cable structure, and not have zip-cord structure.

Splice trays must:

1. Have brackets to spool incoming fibers a minimum of 2 turns.
2. Have means to secure and protect incoming buffer tubes, pigtails, and a minimum of 12 heat shrink fusion splices.
3. Be stackable.
4. Have a snap-on or hinged cover. The cover may be transparent.

A splice cassette may be used in place of a pigtail and a splice tray.

87-19.02F Fiber Optic Markers

Fiber optic markers must be:

1. Type K-2 (CA) object markers for splice vaults or pull boxes.
2. Type G retroreflective pavement markers for paved areas and transition points from unpaved to paved areas.
3. Non-reflective Class 1, Type F, flexible post delineators for unpaved areas.

87-19.02G Fiber Optic Connectors and Couplers

Singlemode fiber optic connectors must have a yellow strain relief boot or a yellow base.

Connectors must be:

1. 0.1-inch ceramic ferrule pre-radiused type
2. Capped when not used

Couplers must be made of the same material as the connector's housing and have ceramic sleeves.

87-19.03 CONSTRUCTION

87-19.03A General

Perform the OTDR test:

1. On the fiber optic cable upon its arrival to the job site and before its installation. Complete the Cable Verification Worksheet. Do not install the fiber optic cable until the Engineer's written approval is received.
2. After the fiber optic cable segments have been pulled but before breakout and termination. Complete the Segment Verification Worksheet.
3. Once the passive cabling system has been installed and is ready for activation. If the measured individual fusion splice losses exceed -0.30 dB, re-splice and retest. At the conclusion of the OTDR test, perform the power meter and light source test. If the measured link loss exceeds the calculated link loss, replace the unsatisfactory cable segments or splices and retest. Complete the Link Loss Budget Worksheet.

87-19.03B Splice Vaults Installation

Install a splice vault as shown and with the side facing the roadway a minimum of 2 feet from the edge of pavement or back of dike, away from traffic.

Install the top of the vault flush with surrounding grade in paved areas and 2 inches above the surrounding grade in unpaved areas.

Place minor concrete around and under vaults. In unpaved areas, finish top of concrete at a 2 percent slope away from cover. In paved areas, finish top of concrete to match existing slope.

Bolt the steel cover to the vault when not working in it.

87-19.03C Fiber Optic Cable Installation

Install fiber optic cable under manufacturer's instructions. Fiber optic cable must be installed by a certified installer or a representative from the fiber optic cable manufacturer must be present during installation.

For installation of fiber optic cable using mechanical aids:

1. Maintain a cable bend radius at least twenty times the outside diameter of the cable.
2. Cable grips have a ball bearing swivel.
3. Pulling force on a cable must not exceed 500 pound-foot or manufacturer’s recommended pulling tension, whichever is less.

Cable installed using the air blown method must withstand a static air pressure of 110 psi.

Lubricate the cable using a lubricant recommended by the cable manufacture.

Use only a non-abrasive pull tape.

Install fiber optic cable without splices except where shown or authorized.

Provide a minimum of 65 feet of slack for each fiber optic cable at each splice vault. Divide the slack equally on each side of the splice enclosure.

Install tracer wires in the fiber optic conduits and innerducts as shown. Provide a minimum 5 feet of slack tracer wire in each pull box and splice vault from each direction. You may splice tracer wire at intervals of not less than 500 feet and only inside splice vaults or pull boxes.

If a fiber optic cable and tracer wire is installed in an innerduct, pulling a separate fiber optic cable into a spare duct to replace damaged fiber will not be allowed.

Apply a flooding material to fiber optic cable openings.

Seal the ends of conduit after cables are installed.

Install strain relief for fiber optic cable entering a fiber optic enclosure.

Identify fibers and cables by direct labeling, metal tags, or bands fastened in such a way that they will not move. Use mechanical methods for labeling.

Provide identification on each fiber or each group of fibers in each splice vault and near the end of terminated fibers.

Place labels on the cables at the following points:

1. Fiber optic splice vault entrance and exit
2. Splice enclosures entrance and exit
3. FDU entrance

For fiber optic riser cable inside controller cabinets, lace and secure the cable to the cage.

Support the fiber optic riser cable within 6 inches from a termination and every 2 feet.

Secure fiber optic cables to the cable racks. Store excess cable in a figure 8 fashion.

87-19.03D Fiber Optic Cable Splices

Use fusion splicing for fiber optic cables.

Splice single-buffer tube cable to multi-buffer tube cable using the mid-span access method under manufacturer's instructions. Any mid-span access splice or FDU termination must involve only those fibers being spliced as shown.

Place fiber splices in the splice enclosures installed in the splice vaults.

87-19.03E Splice Enclosures Installation

Maintain an equal amount of slack on each side of the splice enclosure.

Secure the fiber optic splices in splice tray.

Secure the splice trays to the inner enclosure.

Label cables and buffer tubes.

Do not seal fiber splice enclosure until authorized and the power meter and light source test is performed. Seal the enclosure under manufacturer's recommendation.

Flash test the outer enclosure under manufacturer's instructions in the presence of the Engineer. Visually inspect the enclosure. If bubbles are present, identify the locations where the bubbles are present, take corrective actions and repeat the flash test until no bubbles are present.

Attach the splice enclosure to the side wall of a splice vault or hub with a minimum 2 feet distance between the ground and the bottom of the enclosure.

Secure fiber optic cables to the chassis using cable clamps for fiber optic units.

Connect a minimum of one bonding conductor to a grounding electrode after mounting the fiber optic enclosure to the wall. If there are multiple bonding conductors, organize the conductors in a neat manner.

87-19.03F Fiber Optic Distribution Unit Installation

Spool incoming buffer tubes 2 feet in the splice tray and expose 1 foot of individual fibers.

Maintain a minimum 2-inch-bend radius during and after installation in the splice tray.

Splice incoming fibers in the splice tray.

Restrain each fiber in the splice tray. Do not apply stress on the fiber when located in its final position.

Secure buffer tubes near the entrance of the splice tray.

Secure splice trays under manufacturer's instructions.

Label splice tray after splicing is completed.

Install patch cords in FDUs and patch panels. Permanently label each cord and each connector in the panel with the system as shown.

87-19.03G Fiber Optic Markers Installation

Install fiber optic markers at 12-inch offset on the side furthest away from the edge of travel way:

1. For fiber optic cable at 500 feet apart in areas where the distance between splice vaults or pull boxes is greater than 500 feet
2. Adjacent to pull boxes and splice vaults
3. For fiber optic cable turns at:
   - 3.1. Beginning of the turn
   - 3.2. Middle of the arc
   - 3.3. End of the turn

When a fiber optic cable crosses a roadway or ramp, install a Type G marker over the conduit on:

1. Every shoulder within 6 inches from the edge of pavement
2. Delineated median
3. Each side of the barrier

Install markers under section 81 except each retroreflective face must be parallel to the road centerline and facing away from traffic.

87-19.04 PAYMENT

Not Used

04-15-16

87-20 TEMPORARY ELECTRICAL SYSTEMS

87-20.01 GENERAL

Section 87-20 includes specifications for providing temporary electrical systems.

Obtain the Department's authorization for the type of temporary electrical system and its installation method.

A temporary system must operate on a continuous, 24-hour basis.

01-20-17

Temporary wood poles must comply with section 48-6.

04-15-16

87-20.02 MATERIALS

87-20.02A General

Material and equipment may be new or used.

The components of a temporary system are shown on the project plans.

If you use Type UF-B cable, the minimum conductor size must be no. 12.

87-20.02B Temporary Flashing Beacon Systems

A temporary flashing beacon system consists of a flashing beacon system, wood post, generator, and photovoltaic system.

The system must comply with the specifications for a flashing beacon system in section 87-7, except it may be mounted on a wood post or a trailer.

87-20.02C Temporary Lighting Systems

A temporary lighting system consists of a lighting system, generator, and wood poles.

The system must comply with the specifications for a lighting system in section 87-2, except it may be mounted on a wood pole or a trailer.

87-20.02D Temporary Signal Systems

A temporary signal system consists of a signal and lighting system, wood poles and posts, and a generator.

System must comply with the specifications for a signal and lighting system in section 87-4, except:

1. Signal heads may be mounted on a wood pole, mast arm, tether wire, or a trailer
2. Flashing beacons may be mounted on a wood post, or a trailer

87-20.03 CONSTRUCTION

87-20.03A General

Provide electrical and telecommunication services for temporary systems. Do not use existing services unless authorized.

Provide power for the temporary electrical systems under section 12-3.33, except you may use a photovoltaic system for the temporary flashing beacon system.

Install conductors and cables in a conduit, suspended from wood poles at least 25 feet above the roadway, or use direct burial conductors and cables.

You may saw slots across paved areas for burial conductors and cables.

Install conduit outside the paved area at a minimum of 12 inches below grade for Type 1 and 2 conduit and at a minimum of 18 inches below grade for Type 3 conduit.

Install direct burial conductors and cables outside the paved area at a minimum depth of 24 inches below grade.

Place the portions of the conductors installed on the face of wood poles in either Type 1, 2, or 3 conduit between the point 10 feet above grade at the pole and the pull box. The conduit between the pole and the pull box must be buried at a depth of at least 18 inches below grade.

Place conductors across structures in a Type 1, 2, or 3 conduit. Attach the conduit to the outside face of the railing.

Mount the photoelectric unit at the top of the standard or wood post.

You may abandon in place conductors and cables in sawed slots or in conduit installed below the ground surface.

87-20.03B Temporary Flashing Beacon Systems

Install a fused-splice connector in the pull box adjacent to each flashing beacon. Wherever conductors are run overhead, install the splice connector in the line side outside of the control assembly.

87-20.03C Temporary Lighting Systems

Wherever conductors are run overhead, install the fuse splice connectors in the line side before entering the mast arm.

87-20.03D Temporary Signal Systems

You may splice conductors that run to a terminal compartment or a signal head on a pole to the through conductors of the same phase in a pull box adjacent to the pole. Do not splice conductors or cables except in a pull box or in a NEMA 3R enclosure.

The Department provides the timing for the temporary signal.

Maintain the temporary signal except for the Department-furnished controller assembly.

87-20.04 PAYMENT

Not Used

87-21 EXISTING ELECTRICAL SYSTEMS

87-21.01 GENERAL

Section 87-21 includes general specifications for performing work on existing electrical systems.

87-21.02 MATERIALS

Not Used

87-21.03 CONSTRUCTION

87-21.03A General

You may abandon unused underground conduit after pulling out all conductors and removing conduit terminations from the pull boxes.

If standards are to be salvaged, remove:

1. All components
2. Mast arms from the standards
3. Luminaires, signal heads, and signal mounting assemblies from the standards and mast arms

If the existing material is unsatisfactory for reuse and the Engineer orders you to replace it with new material, replacing the existing material with new material is change order work.

If the removed electrical equipment is to be reinstalled, supply all materials and equipment, including signal mounting assemblies, anchor bolts, nuts, washers, and concrete, needed to complete the new installation.

87-21.03B Maintaining Existing Electrical Systems

87-21.03B(1) General

Maintain the existing electrical system in working order during the progress of the work. Conduct your operations to avoid damage to the elements of the systems.

87-21.03B(2) Maintaining Existing Traffic Management System Elements During Construction

07-21-17

Section 87-21.03B(2) applies if a bid item for maintaining existing traffic management system elements during construction is shown on the Bid Item List.

04-15-16

Traffic management system elements include:

1. Ramp metering system
2. Traffic monitoring stations
3. Microwave vehicle detection system
4. Changeable message sign system
5. Extinguishable message sign system
6. Highway advisory radio system
7. Closed circuit television camera system
8. Roadway weather information system

Obtain authorization at least 72 hours before interrupting communication between an existing system and the traffic management center.

If the Engineer notifies you that an existing system is not fully operational due to your activities, repair or replace the system within 72 hours. If the system cannot be fixed within 72 hours or it is located on a structure, provide a temporary system within 24 hours until the system can be fixed. Perform a functional test of the system in the presence of the Engineer. If you fail to perform the necessary repair or replacement work, the Department may perform the repair or replacement work and deduct the cost.

If you damage an existing fiber optic cable, install a new cable such that the length of cable slack is the same as before the damage, measured from an original splice point or termination. All splices must be made using the fusion method.

You may interrupt the operation of traffic monitoring stations:

1. For 60 days if another operational traffic monitoring station is located within 3 miles
2. For 15 days if another operational traffic monitoring station is located more than 3 miles away

If a traffic monitoring station must be interrupted for longer periods than specified, provide a temporary detection system. Obtain the Department's authorization for the type of temporary system and its installation method.

87-21.03C Modifying Existing Electrical Systems

Modify electrical systems as shown.

87-21.03D Removing Existing Electrical Systems

The components to be removed are shown on the project plans.

87-21.04 PAYMENT

Not Used

^^^

DIVISION XI MATERIALS

90 CONCRETE

01-20-17

Replace *Method 1* in the 4th paragraph of section 90-1.01D(5)(a) with:

07-15-16

Method 2

Add to section 90-4.01C(1):

01-20-17

Submit daily temperature data for internally monitored tier 1 PC concrete members each week as an informational submittal.

Add between the 2nd and 3rd paragraphs of section 90-4.01C(3):

01-20-17

For internally monitored tier 1 PC bridge components, include the following as part of the QC plan:

1. Authorized mix design
2. Duration and method of curing
3. Concrete temperature monitoring and recording system details
4. Temperature sensor types and locations
5. Measures to ensure compliance with maximum temperature and temperature gain requirements, including maximum concrete temperature at discharge and controlling enclosure temperature

Replace the list in the 3rd paragraph of section 90-4.01C(3) with:

01-20-17

1. Concrete plants
2. Material sources

3. Material testing procedures
4. Testing laboratory
5. Procedures and equipment
6. Systems for tracking and identifying PC concrete members
7. QC personnel
8. Methods for controlling internal concrete temperature

Add to the list in the 2nd paragraph of section 90-4.01C(4):

01-20-17

7. Daily temperature data for internally monitored tier 1 PC concrete members

Replace *Temperature* in the 2nd table in the 5th paragraph of section 90-4.01D(2)(c) with:

01-20-17

Temperature at time of mixing

Add to section 90-4.01D(2):

01-20-17

90-4.01D(2)(d) Temperature Monitoring

90-4.01D(2)(d)(i) General

At a minimum, provide temperature monitoring devices as shown in the following table:

Temperature Monitoring Requirements

Component	Steam curing	Other curing methods
Tier 1 PC bridge components except piling and deck panels	1 internal temperature sensor for each individually cast member; 1 internal temperature sensor for every 100 feet of bed length for continuously cast elements[a]	1 internal temperature sensor for each individually cast member; 1 internal temperature sensor for every 100 feet of bed length for continuously cast elements[a]
PC piling, deck panels, and PS pavement	1 enclosure temperature sensor for every 200 feet of bed length for continuously cast elements	Not required
Other PC components	1 enclosure temperature sensor for every 200 feet of bed length for continuously cast elements	Not required

[a]Members not instrumented are represented by the nearest internal temperature probe.

Temperature monitoring devices must provide an accurate, continuous, permanent record of the temperature during curing activities.

90-4.01D(2)(d)(ii) Tier 1 Bridge Components

Except for piling and deck panels, provide a temperature monitoring and recording system during concrete placement and curing for tier 1 PC bridge components. The system must consist of temperature sensors connected to a data acquisition system. The system must be capable of recording, printing, and downloading temperature data to a computer. Temperature sensors must be accurate to within ±2 degrees F.

Position each internal concrete temperature sensor as shown in the following table:

Internal Concrete Sensor Locations

PC component	Sensor location
Wide flange, 'I', and bulb tee girders	6–8 inches below top surface along center line at midpoint
Other girder shapes	6–8 inches below top surface along center line of stem at midpoint
Deck slabs	Center of element at mid-depth
Other elements	Position sensor to provide maximum concrete cover

Record temperature readings automatically at least every 15 minutes. You may discontinue temperature recording (1) when the maximum internal concrete temperature is falling for a minimum of 1 hour, or (2) immediately before stress transfer to the concrete.

Do not allow the ends of temperature sensors to come into contact with concrete supports, forms, or reinforcement.

Correct equipment failures in temperature control and monitoring and recording systems immediately.

Add to section 90-4.01D(3):

01-20-17

For tier 1 PC bridge components that are monitored for internal temperature, the Engineer rejects components if at any temperature sensor (1) the maximum internal concrete temperature exceeds 165 degrees F, or (2) the internal temperature gain exceeds 40 degrees F per hour. If the maximum internal concrete temperature is from 161 to 165 degrees F, the Engineer reduces payment for furnish PC concrete member by a percentage equal to 2 times the difference of the maximum measured temperature in degrees F minus 160.

Add between the 3rd and 4th paragraphs of section 90-4.02:

01-20-17

For tier 1 PC concrete members with internal temperature monitoring:

1. Maximum internal concrete temperature must not exceed 165 degrees F at any temperature sensor
2. Maximum temperature gain must not exceed 40 degrees F per hour at any temperature sensor

Replace the 5th paragraph of section 90-4.02 with:

01-20-17

Portland cement based repair material must be on the Authorized Material List for precast portland cement based repair material.

Replace the 4th item in the list in the 2nd paragraph of section 90-4.03 with:

01-20-17

4. Steam at the jets must be at low pressure and in a saturated condition. Steam jets must not impinge directly on the concrete, test cylinders, or forms. During application of the steam, the temperature rise within the enclosure must not exceed 40 degrees F per hour. Except for internally monitored components, the curing temperature throughout the enclosure must not exceed 150 degrees F. Maintain the curing temperature at a constant level for the time necessary to develop the required transfer strength. Cover control cylinders to prevent moisture loss and place them in a location where the temperature is representative of the average enclosure temperature.

01-20-17

Delete the 5th item in the list in the 2nd paragraph of section 90-4.03.

Add to section 90-4.03:

01-20-17

For internally monitored tier 1 PC bridge components with a maximum internal concrete temperature of 161 to 165 degrees F, the following apply:

1. Do not apply curing compound
2. Cure an additional 7 days using the water cure method
3. After 7 days apply a silane waterproofing treatment under the following conditions:
   3.1. Silane waterproofing treatment selected for use must be on the Authorized Material List for silane reactive penetrating sealers
   3.2. Concrete surfaces must be completely dry when silane is applied
   3.3. Apply a single application of undiluted silane under the manufacturer's application instructions until surfaces are saturated

Replace section 90-9 with:

07-15-16

90-9 RETURNED PLASTIC CONCRETE

90-9.01 GENERAL

90-9.01A Summary

Section 90-9 includes specifications for incorporating returned plastic concrete (RPC) into concrete.

RPC must be used only where the specifications allow its use. Do not use RPC in pavement or structural concrete.

90-9.01B Definitions

returned plastic concrete (RPC): Excess concrete that is returned to a concrete plant in a plastic state and that has not attained initial set.

hydration stabilizing admixture (HSA): Extended set retarding admixture that controls and predictably reduces the hydration rate of the cementitious material.

90-9.01C Submittals

Submit the following with the weighmaster certificate:

1. Weight or volume of RPC
2. Type, brand, and dosage of HSA
3. Time of adding HSA
4. Copy of the original weighmaster certificate for the RPC
5. Temperature of RPC

When requested, submit the HSA manufacturer's instructions, including dosage tables.

90-9.01D Quality Assurance

The material plant producing concrete containing RPC must be authorized under the MPQP.

For volumetric proportioning of RPC:

1. The volumetric container must be imprinted with manufacturer’s name, model number, serial number, the as-calibrated volume and date of the last calibration. Cross sectional dimensions of the container must remain the same as those during its calibration.
2. The device must be re-calibrated monthly and at any time when the container shape has been deformed from its original condition or there is evidence of material build-up on the inside of the device.

3. The device must be held in a level condition during filling. Fill the device to the measure or strike-off line. Each measurement must be filled to within 1.0% of the device as-calibrated volume.
4. The device interior must be cleaned after each measurement to maintain a zero condition.

For weight proportioning, proportion RPC with a weigh hopper attached to the plant at a position which allows the addition of the RPC to the mixer truck with the conventional PCC ingredients. The plant process controller must control the proportioning of RPC to within 1.0% of its target weight.

90-9.02 MATERIALS

90-9.02A General

The quantity of RPC added to the concrete must not exceed 15 percent.

The cementitious material content of the RPC must be at least that specified for the concrete that allows the use of RPC.

Water must not be added to the RPC after batching, including in the truck mixer.

Use HSA for controlling and reducing the hydration rate of RPC.

Incorporate RPC by mixing into the concrete before arriving at the jobsite.

90-9.02B Returned Plastic Concrete

The RPC must not exceed 100 degrees F at any time.

If HSA is not used, RPC must be incorporated into the concrete before attaining initial set or within 4 hours after batching of RPC, whichever is earlier.

If HSA is used:

1. Add HSA to RPC within 4 hours after original batching.
2. Measure and record the time, dosage of HSA, and temperature of RPC when HSA is added.
3. Mix the RPC under the HSA manufacturer's instructions after adding HSA or at least 30 revolutions, whichever is greater.
4. Incorporate RPC into the concrete within 4 hours after adding HSA.

RPC must not contain:

1. Accelerating admixture
2. Fiber
3. Pigment
4. Lightweight aggregate
5. Previously returned RPC
6. Any ingredient incompatible with the resultant concrete

90-9.02C Hydration Stabilizing Admixture

HSA must comply with ASTM C494 admixture Type B or Type D.

HSA must have a proven history of specifically maintaining and extending both plasticity and set.

HSA dosage must comply with the manufacturer's instructions.

90-9.02D Production

Proportion concrete containing RPC under section 90-2.02E.

Proportion RPC by weight or by volume.

90-9.03 CONSTRUCTION

Not Used

90-9.04 PAYMENT

Not Used

^^

92 ASPHALT BINDERS

04-15-16

Replace the 4th paragraph of section 92-1.02B with:

04-15-16

Crumb rubber modifier used must be on the Authorized Materials List for crumb rubber modifier.

Production equipment for PG modified asphalt binder with crumb rubber modifier must be authorized under the Department's *MPQP*.

Crumb rubber must be derived from waste tires described in Pub Res Code § 42703 and must be free from contaminants including fabric, metal, minerals, and other nonrubber substances.

^^

95 EPOXY

04-20-18

Replace the requirement in the row for Brookfield viscosity in the table in section 95-1.02H with:

04-20-18

9

^^

96 GEOSYNTHETICS

04-20-18

Replace *product name, manufacturing source, and date of manufacture* in the 2nd sentence of the 1st paragraph of section 96-1.01D with:

01-15-16

manufacturing source code

Replace *Apparent opening size, (min, inches)* in the table in the 2nd paragraph of section 96-1.02O with:

01-20-17

Apparent opening size, (max, inches)

Replace section 96-1.02R with:

04-20-18

96-1.02R Geomembrane

Geomembrane must be:

1. Polyethylene or polypropylene
2. Water resistant
3. Unreinforced or scrim reinforced

Cushion fabric must be nonwoven.

Geomembrane and cushion fabric must comply with the requirements shown in the following tables:

Unreinforced Geomembrane

Quality characteristic	Test method	Requirement		
		Class A	Class B	Class C
Thickness, smooth (min, mil)	ASTM D5199	20	20	20
Thickness, textured (min, mil)	ASTM D5994			
Tensile break strength (min, lb/in)	ASTM D6693 Type IV	75	65	55
Puncture resistance (min, lb)	ASTM D4833	45	40	35
Tear resistance (min, lb)	ASTM D1004	20	15	10
Carbon black content (%)	ASTM D4218	2–3		

Scrim Reinforced Geomembrane

Quality characteristic	Test method	Requirement		
		Class A	Class B	Class C
Thickness, smooth (min, mil)	ASTM D5199	20	20	20
Thickness, textured (min, mil)	ASTM D5994			
Tensile break strength (min, lb)	ASTM D7004	250	200	150
Puncture resistance (min, lb)	ASTM D4833	45	40	35
Tear resistance (min, lb)	ASTM D5884	55	55	55
Ply adhesion (min, lb)	ASTM D6636	20	20	20
Carbon black content (%)	ASTM D4218	2–3		

Cushion Fabric

Quality characteristic	Test method	Requirement					
Mass per unit area (oz/sq yd)	ASTM D5261	10	12	16	24	32	60
Grab tensile break strength (min, lb)	ASTM D4632	230	300	370	450	500	630
Grab tensile break elongation (min, %)	ASTM D4632	50					
Puncture strength (min, lb)	ASTM D6241	700	800	900	1100	1700	2400
Trapezoidal tear strength (min, lb)	ASTM D4533	95	115	145	200	215	290
UV resistance (min, %)	ASTM D7238	70					

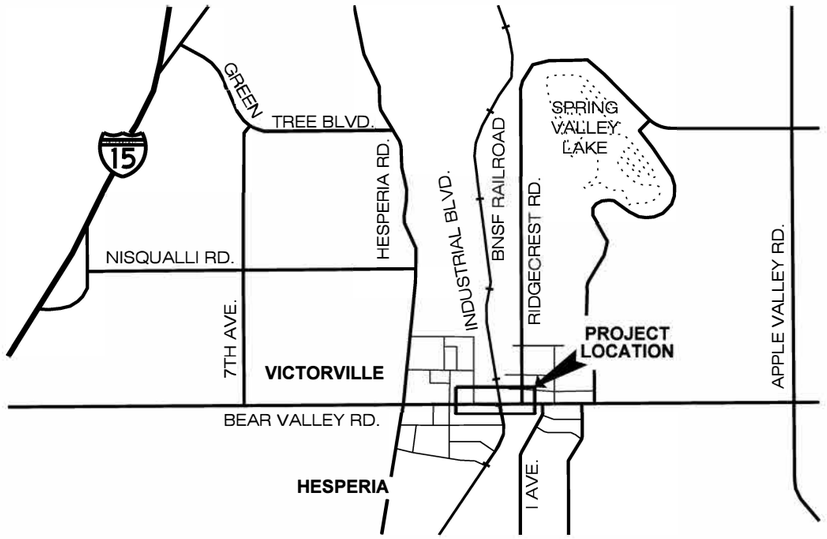

VICINITY MAP

CITY OF VICTORVILLE

STREET IMPROVEMENT PLANS FOR BEAR VALLEY ROAD OVERHEAD AT BNSF RAILROAD

SHEET INDEX

SHEET No.	DWG. No.	DESCRIPTION
1	T-1	TITLE SHEET
2	T-2	NOTES, LEGEND AND ABBREVIATIONS
3 to 5	X-1 to X-3	TYPICAL SECTIONS
6	K-1	KEY MAP
7 to 11	L-1to L-5	STREET IMPROVEMENTS
12 to 20	CD-1 to CD-9	CONSTRUCTION DETAILS
21 to 23	U-1 to U-3	UTILITY PLAN
24	CA-1	CONSTRUCTION ACCESS PLAN
25	CS-1	CONSTRUCTION AREA SIGNS
26 to 35	SC-1 to SC-10	STAGE CONSTRUCTION
36 to 38	G-1 to G-3	GRADING PLAN
39 to 41	EC-1 to EC-3	EROSION CONTROL PLAN
42	D-1	DRAINAGE PLAN
43 to 45	PD-1 to PD-3	STRIPING PLANS
46 to 48	S-1 to S-3	SIGNING PLANS
49 to 51	E-1 to E-3	LIGHTING PLANS
52 to 55		TRAFFIC SIGNAL PLANS
56 to 57		CULVERT PLANS
58 to 81	GP-1 to TB-4	BRIDGE PLANS

BENCH MARK
BASIS OF HORIZONTAL & VERTICAL CONTROL

HORIZONTAL CONTROL NETWORK:
CALIFORNIA STATE PLANE COORDINATE SYSTEM, NAD83, ZONE 5 (EPOCH 1992.88)

VERTICAL CONTROL NETWORK:
SEA LEVEL DATUM OF 1929 (NAVD 29)

SITE BENCHMARK:
BRASS DISK MONUMENT "V-16R" SET IN NORTHWEST CORNER OF BEAR VALLEY ROAD & APATITE AVENUE @ BCR
ELEV: =3001.11 FEET

SITE BENCHMARK:
BRASS DISK MONUMENT "V-17" SET IN SOUTHWEST CORNER OF RIDGECREST ROAD & BEAR VALLEY ROAD IN LINE WITH WEST CRUB OF RIDGECREST ROAD, 3.4 FT SOUTH OF BEAR VALLEY ROAD CURB
ELEV: =2975.138 FEET

ACCEPTED BY: _____ _____

BRIAN GENGLER, PE
CITY ENGINEER

DATE

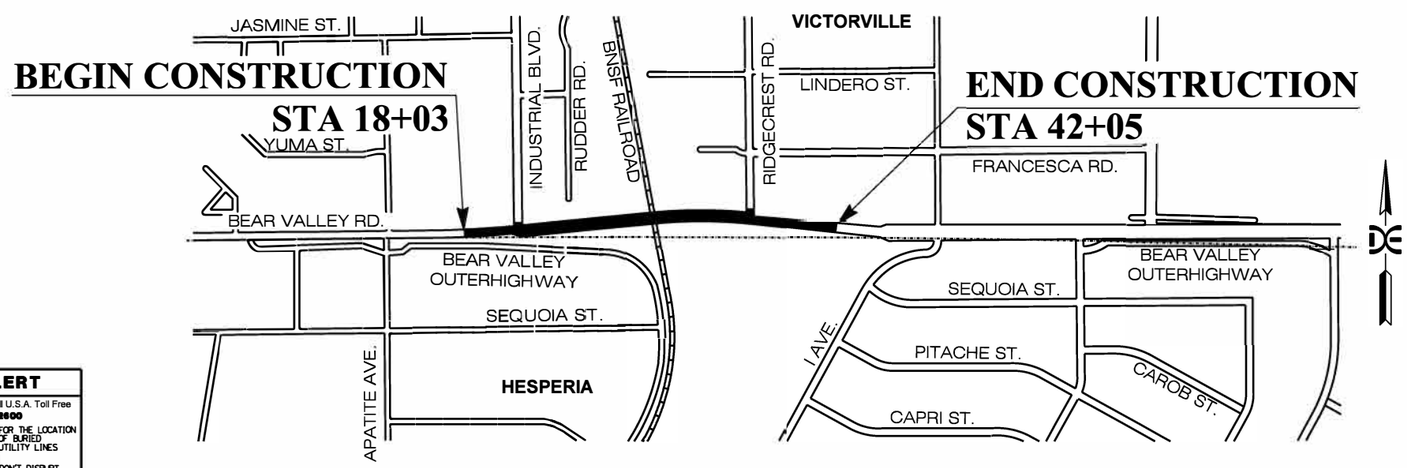

SPECIAL NOTE TO THE CONTRACTOR

THE EXISTENCE AND LOCATION OF ANY UNDERGROUND UTILITY PIPES OR STRUCTURES SHOWN ON THESE PLANS ARE OBTAINED BY A SEARCH OF ALL AVAILABLE RECORDS, TO THE BEST OF OUR KNOWLEDGE. THE CONTRACTOR IS REQUIRED TO TAKE DUE PRECAUTIONARY MEASURES TO PROTECT THE UTILITY LINES SHOWN AND ANY OTHER LINE NOT OF RECORD OR NOT SHOWN ON THESE PLANS. PRIOR TO EXCAVATION, THE CONTRACTOR SHALL CALL TOLL FREE 1-800-422-4133 TO VERIFY THE UNDERGROUND LOCATION OF ALL UTILITIES.

DIG ALERT
Don't Dig...Until You Call U.S.A. Toll Free
800-227-2600
FOR THE LOCATION OF BURIED UTILITY LINES
DON'T DISRUPT VITAL SERVICES
TWO WORKING DAYS BEFORE YOU DIG

NO.	REVISION	BY	DATE

APPROVED BY: CITY ENGINEER _____ BRIAN GENGLER DATE: _____ R.C.E. EXP. 03-31-16

DESIGNED: KRIS KOFOED
DRAWN: BRYAN FRASER
CHECKED: JUANN RAMOS

RECORD DRAWING DATE:
SCALE HORIZ: N/A VERT: N/A
PROJECT NO. XXXXX
CAD FILE: ...\511\2007_cd01.dgn

CITY OF VICTORVILLE
ENGINEERING DIVISION
14343 CIVIC DRIVE,
VICTORVILLE, CA 92392
(760) 955-5158

DOKKEN ENGINEERING
110 BLUE RAVINE ROAD SUITE 200, FOLSOM CA. 916-858-0642

JUANN RAMOS, PROJECT ENGINEER _____ DATE

REGISTERED PROFESSIONAL ENGINEER JUANN RAMOS No. 61931 Exp. 09/30/19 CIVIL STATE OF CALIFORNIA

BEAR VALLEY ROAD OH AT BNSF RAILROAD

TITLE SHEET

T-1

DWG. NO.

LEGEND AND ABBREVIATIONS

DESCRIPTION	ABBR	SYMBOL EXIST	SYMBOL PROP
AGGREGATE BASE	AB		
ACRYLONITRILE BUTADIENE STYRENE	ABS		
AHEAD PAVEMENT MARKING		AHEAD	AHEAD
AIR RELIEF VALVE	ARV		
ALTITUDE VALVE			
AND	&		
ANGLE POINT	AP		
APPROXIMATE	APPRO.		
ASBESTOS CEMENT PIPE	ACP		
ASPHALT PAVEMENT	AC		
ASSESSOR'S PARCEL NUMBER	APN		
AVENUE	AVE.		
BACK OF CURB	B/C		
BACK OF WALK	BOW		
BACKFLOW PREVENTION DEVICE	BFP		
BASE LINE	B/L		
BEGIN	BEG		
BEGIN BRIDGE	BB		
BEGIN CURB RETURN	BCR		
BEGIN VERTICAL CURVE	BVC		
BENCH MARK	BM		
BUILDING	BLDG		
BLIND FLANGE	BF		
BLOW-OFF	BO		
BOLLARD	BOLL		
BOTTOM OF CURB	BC		
BOULEVARD	BLVD		
BUSINESS	BUS		
BUTTERFLY VALVE	BFV		
CALTRANS DETAIL	CAL		
CABLE TELEVISION	CATV	CATV	CATV
CATCH BASIN	CB		
CENTER LINE	C/L		
CLASS	CL		
CONCRETE	CONC.		
CONTOUR		3050	
COUPLING	COUPL.		
CONC. LINED AND COATED STEEL PIPE	CCSP		
CORRUGATED METAL PIPE	CMP		
CONFORM POINT, CATCH POINT	CP		
CONSTRUCTION NOTE			
CORE REFERENCE			R1
CURVE DATA NOTE			
CURB AND GUTTER	C&G		
CUT	C		
DESIGN SPEED	DS		
DRIVE	DR.		
DRIVEWAY	D/W,DWY		
DRAWING	DRWG		
DROP INLET	DI		
DUCTILE IRON PIPE	DIP		
EACH	EA		
EAST	(E)		
ELEVATION	ELEV	XXXX.XX	XXXX.XX TC XXXX.XX FL
EDGE OF PAVEMENT	EP		
ELECTRICAL LINE	ELEC		
ELECTRICAL PULLBOX	ELEC	E	E
END BRIDGE	EB		
END CURB RETURN	ECR		
END OF CURVE	EC		
END VERTICAL CURVE	EVC		
EXISTING (EXIST)	(EX.)		
EXISTING GROUND	EG		
EXISTING CABLE TV LINE		TV	TV
EXISTING GAS LINE		G	G
EXISTING ELECTRICAL LINE		E	E
EXISTING FIBER OPTIC LINE		FO	FO
EXISTING SEWER LINE		S	S
EXISTING TELEPHONE LINE		T	T
EXISTING WATER LINE		W	W
EXISTING POWER POLE		OR PP	
EXISTING STREET LIGHT			
EXISTING TREE			
EXISTING WATER			
EXISTING WALL			
FACE OF CURB	F/C		
FEET	FT		
FENCE	FNC	X	X
FILL	F		
FINISHED GRADE	FG		
FINISH SURFACE	FS		
FIRE HYDRANT	FH	OR	OR
FIRE SERVICE	F.S.		

DESCRIPTION	ABBR	SYMBOL EXIST	SYMBOL PROP
FLANGE(D)	FL		
FLOW LINE	F/L, FL		
GALVANIZED	GALV		
GAS MAIN	G	G	G
GAS SERVICE	GS		
GAS VALVE	GSV	GSV	GSV
GATE VALVE	GV		
GRADE BREAK	GB		
GUY WIRE/ANCHOR	GW		
HIGH DENSITY POLYETHYLENE	HDPE		
HIGH POINT	HI		
HIGH PRESSURE GAS	HPG	HPG	HPG
HINGE POINT	HP		
INTERSECTION POINT	IP		
LANE	LN		
LATERAL	LAT.		
LEFT/RIGHT	LT/RT		
LENGTH	L		
LIMITS OF JOINT RESTRAINT	J.R.		
LINEAR FEET	LF		
LIP OF GUTTER	L/G		
LIGHT, LEFT	LT		
LOW POINT	LP, LO		
MANHOLE	MH		
MATCH LINE	M/L		
MIDWEST GUARD RAIL	MWGR		
MONUMENT	MON		
MINIMUM	MIN		
NORTH	N		
NORTHEAST	(NE)		
NOT TO SCALE	NTS		
NUMBER	NO.	#	#
ON CENTER	O.C.		
ORIGINAL GRADE	OG		
PAC BELL MANHOLE	PAC		
PEDESTAL	PED		
POINT OF BEGINNING	POB		
POINT OF ENDING	POE		
POINT OF INFLECTION	PI		
PLUG(ED)			
POLYVINYL CHLORIDE	PVC		
PORTLAND CEMENT CONCRETE	PCC		
PROFILE GRADE	PG		
PROPERTY LINE	P/L		
PROPOSED	PROP		
PUMP VALVE ASSEMBLY			
RADIUS	R		
RAILROAD	RR	R R	R R
RAILROAD PAVEMENT MARKING			
REDUCER			
REINFORCED CONCRETE PIPE	RCP		
RETAINING	RET.		
RIGHT	R		
RIGHT ANGLE GLOBE VALVE			
RIGHT OF WAY	R/W		
ROAD	RD		
SANITARY SEWER SERVICE	S	S	
SANITARY SEWER MAIN	SS	12" S	12" S
SANITARY SEWER FORCED MAIN	SSFM	18" SSFM	18" SSFM
SANITARY SEWER MANHOLE	SSMH		
SEWER CLEAN OUT	SSCO		
SIDEWALK	SDWK		
SIGN			
SOUTHERN CALIFORNIA EDISON	SCE		
SPRINKLERS	SPRKLS		
SPRING CHECK VALVE	SCV		
SQUARE FEET	SF		
STANDARD	STD.		
STEEL	STL.		
STOP PAVEMENT MARKING		STOP	STOP
STORM DRAIN MAIN	SD	12" SD	12" SD
STORM DRAIN MANHOLE	SDMH		
STREET	ST.		
STREET NAME(S) SIGN			
STATION	STA.		
TAPPING (TAPPED)	TAP.		
TANGENT	T		
TELEPHONE LINE	TELE.		
TELEPHONE/POWER POLE			
TEMPORARY BENCH MARK	TBM		
TEMPORARY ESA FENCE	ESA		ESA
THICK	THK.		

DESCRIPTION	ABBR	SYMBOL EXIST	SYMBOL PROP
TOE OF LEVEE	TOE		
TOP OF CURB	T/C, TC		
TOP OF SLOPE	TOP		
TOP OF LEVEE	TOP		
TOP/BOTTOM OF WALL	TW/BW		
TRAFFIC SIGNAL, MAST, AND POLE			
TRAFFIC SIGN		OR	OR
TRANSITION	TRANS.		
TREE			
TYPE III (L & R) ARROW			
TYPE V ARROW			
TYPE "A" LOOP DETECTOR			
TYPE "C" LOOP DETECTOR			
TYPE DB PAVEMENT MARKER			
TYPICAL	TYP.		
VALLEY GUTTER	VG		
VALVE/WATER METER		WV GV	
VARIES	VAR		
VERTICAL	VERT		
VERTICAL POINT OF REVERSING CURVE	PVRC		
VITRIFIED CLAY PIPE	VCP		
WATER MAIN		12" W	12" W
WATER MANHOLE	WMH		
WATER METER BOX	WM		
WATER SERVICE/WATER SURFACE	W (WS)		
WAY	WY		
WELDED STEEL PIPE	WSP	W	
WELL			
WEST	(W)		
WITH	W/		
WITHOUT	W/O		
YEAR	YR		

COLDPLANE HMA-A FULL STRUCTURAL DEPTH . . . . . .

COLDPLANE 0.35' HMA OVERLAY . . . . . .

REMOVE AND REPLACE . . . . . .
EXISTING AC PAVEMENT

GENERAL NOTES:

1. ALL WORK SHALL BE DONE IN ACCORDANCE WITH THESE PLANS, SPECIAL PROVISIONS, AND THE LATEST VERSION OF CITY OF VICTORVILLE STANDARD SPECIFICATIONS FOR PUBLIC WORKS IMPROVEMENTS, CALIFORNIA DEPARTMENT OF TRANSPORTATION STANDARD PLANS, AND THE GREENBOOK STANDARD SPECIFICATIONS.
2. THE CONTRACTOR AGREES THAT (S)HE SHALL ASSUME SOLE AND COMPLETE RESPONSIBILITY FOR JOB SITE CONDITIONS DURING THE COURSE OF CONSTRUCTION OF THIS PROJECT, INCLUDING SAFETY OF ALL PERSONS AND PROPERTIES; THAT THIS REQUIREMENT SHALL APPLY CONTINUALLY, AND NOT BE LIMITED TO NORMAL WORKING HOURS; AND THAT THE CONTRACTOR SHALL DEFEND, INDEMNIFY, AND HOLD THE CITY HARMLESS FROM ANY AND ALL LIABILITY, REAL OR ALLEGED, IN CONNECTION WITH THE PERFORMANCE OF THIS PROJECT.
3. THE CONTRACTOR SHALL NOTIFY THE CITY ENGINEER OF ANY DISCREPANCIES OR UNUSUAL CONDITIONS ON THESE PLANS, THE SPECIAL PROVISIONS BEFORE BID AND AS SOON AS THEY ARE DISCOVERED.
4. IT SHALL BE THE CONTRACTOR'S RESPONSIBILITY TO BE FAMILIAR WITH THE WORK SITE AND ALL UNDERGROUND UTILITIES/FACILITIES SHOWN OR NOT SHOWN ON THESE PLANS.
5. THE CONTRACTOR SHALL OBTAIN ALL PERMITS REQUIRED BY THE CITY OF VICTORVILLE, THE CITY OF HESPERIA, AND OTHER PUBLIC AGENCIES.
6. THE CONTRACTOR SHALL BE HELD RESPONSIBLE FOR ANY CHANGES MADE TO THESE PLANS AND THE SPECIAL PROVISIONS WITHOUT PRIOR WRITTEN AUTHORIZATION OF THE CITY ENGINEER.
7. IT SHALL BE THE CONTRACTOR'S RESPONSIBILITY TO PROTECT SURVEYING MONUMENTS IN PLACE, AND THE CONTRACTOR SHALL BE RESPONSIBLE FINANCIALLY FOR RESETTING DAMAGED OR DESTROYED MONUMENTS.
8. JOSHUA TREES SHALL BE PROTECTED IN PLACE OR RELOCATED AS APPROVED BY THE PARK DIVISION OF THE CITY OF VICTORVILLE, COMMUNITY SERVICES DEPARTMENT AT THE CONTRACTOR'S EXPENSE.
9. ACCESS TO ALL DRIVEWAYS SHALL BE MAINTAINED AT ALL TIMES EXCEPT WHEN PRECLUDED BY NECESSARY CONSTRUCTION FOR A REASONABLE PERIOD OF TIME AS APPROVED BY THE CITY ENGINEER.
10. THE CONTRACTOR SHALL MAINTAIN A NEAT APPEARANCE AT THE JOB SITE. THE CONTRACTOR SHALL REMOVE ALL RUBBISH, UNUSED MATERIALS, FORMS, BROKEN CONCRETE AND ASPHALT, UNUSED CONSTRUCTION EQUIPMENT, AND PLANTS AS SOON AS PRACTICABLE DURING CONSTRUCTION UNTIL FINAL ACCEPTANCE OF THE PROJECT BY THE CITY OF VICTORVILLE.
11. CONSTRUCTION AND/OR MAINTENANCE OPERATIONS BY OTHERS MAY OCCUR CONCURRENTLY AT THE JOBSITE OR IN THE VICINITY OF THE JOBSITE. THE CONTRACTOR SHALL COOPERATE AND COORDINATE WITH THE OTHER CREWS.
12. THE CONTRACTOR SHALL GRADE, COMPACT AND MATCH ALL EXISTING DRIVEWAY/ROAD TO THE FINISHED ELEVATIONS WITHOUT IMPEDING ANY NATURAL DRAINAGE FLOW.
13. CONSTRUCTION OF TRAFFIC CONTROLS, TEMPORARY STRIPING AND SIGNING SHALL BE PROVIDED BY CONTRACTOR IN ACCORDANCE WITH CALIFORNIA MUTCD, LATEST EDITION AND AS APPROVED BY THE CITY ENGINEER.
14. ALL TRAFFIC CONTROL DEVICES, ROAD SIGNS AND MARKERS TO BE REPLACED, REMOVED OR RELOCATED SHALL BE PER SIGNING AND STRIPING PLANS.
15. IF ASPHALT IS TO BE PLACED DIRECTLY ON SUBSURFACE OF ROAD OR DRAINAGE FACILITIES, A SOIL STERILANT REGISTERED BY THE EPA FOR USE UNDER AC OR PC SHALL BE UNIFORMLY APPLIED AT THE MANUFACTURER'S RECOMMENDED RATE FOR FULL PAVEMENT WIDTH PRIOR TO PAVING.
16. ALL NEW AC PAVEMENTS SHALL BE SEAL COATED PER CITY OF VICTORVILLE STANDARD SPECIFICATIONS OR CALIFORNIA DEPARTMENT OF TRANSPORTATION STANDARD SPECIFICATIONS AS DETERMINED BY THE CITY ENGINEER.
17. ALL WORK TO BE DONE IN, AROUND, OR OVER RAILROAD PROPERTY SHALL BE DONE SO WITH THE APPROVAL AND COORDINATION OF THE OWNER AND OPERATOR OF THE RAILROAD PROPERTY AND TRACKS.

NO.	REVISION	BY	DATE

APPROVED BY: CITY ENGINEER — BRIAN GENGLER — DATE: — R.C.E. EXP. 03-31-16

DESIGNED: KRIS KOFOED

DRAWN: BRYAN FRASER

CHECKED: JUANN RAMOS

RECORD DRAWING DATE:

SCALE — HORIZ: N/A — VERT: N/A

PROJECT NO. XXXXX
CAD FILE: ...\511\2007_ab02.dgn

CITY OF VICTORVILLE
ENGINEERING DIVISION
14343 CIVIC DRIVE,
VICTORVILLE, CA 92392
(760) 955-5158

DOKKEN ENGINEERING
110 BLUE RAVINE ROAD SUITE 200, FOLSOM CA. 916-858-0642

JUANN RAMOS, PROJECT ENGINEER — DATE

REGISTERED PROFESSIONAL ENGINEER — JUANN RAMOS — No. 61931 — Exp. 09/30/19 — CIVIL — STATE OF CALIFORNIA

BEAR VALLEY ROAD OH AT BNSF RAILROAD

NOTES, LEGEND, AND ABBREVIATIONS

T-2

DWG. NO.

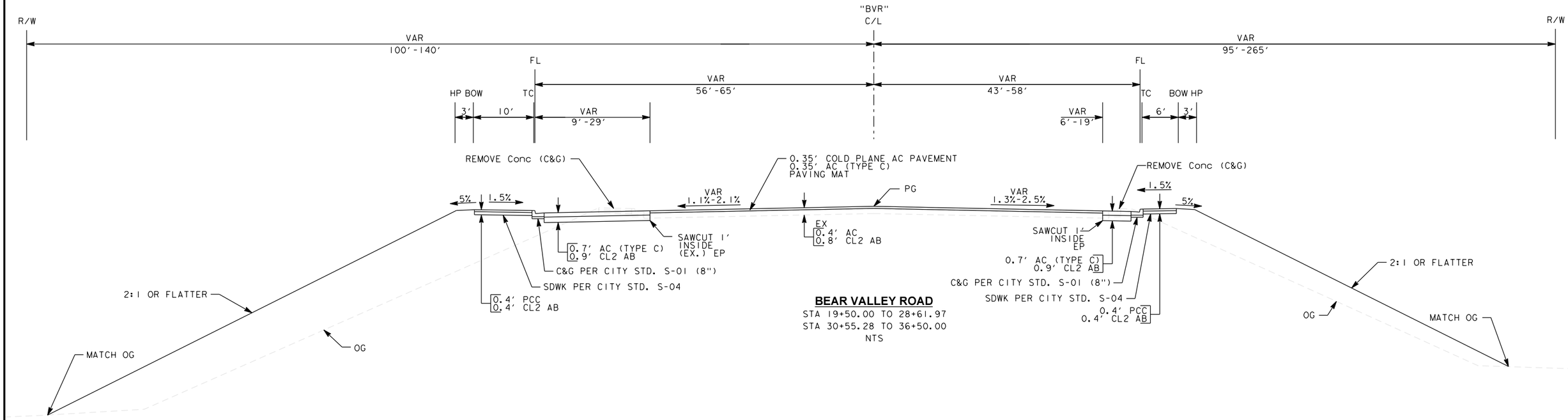

BEAR VALLEY ROAD

STA 19+50.00 TO 28+61.97
STA 30+55.28 TO 36+50.00
NTS

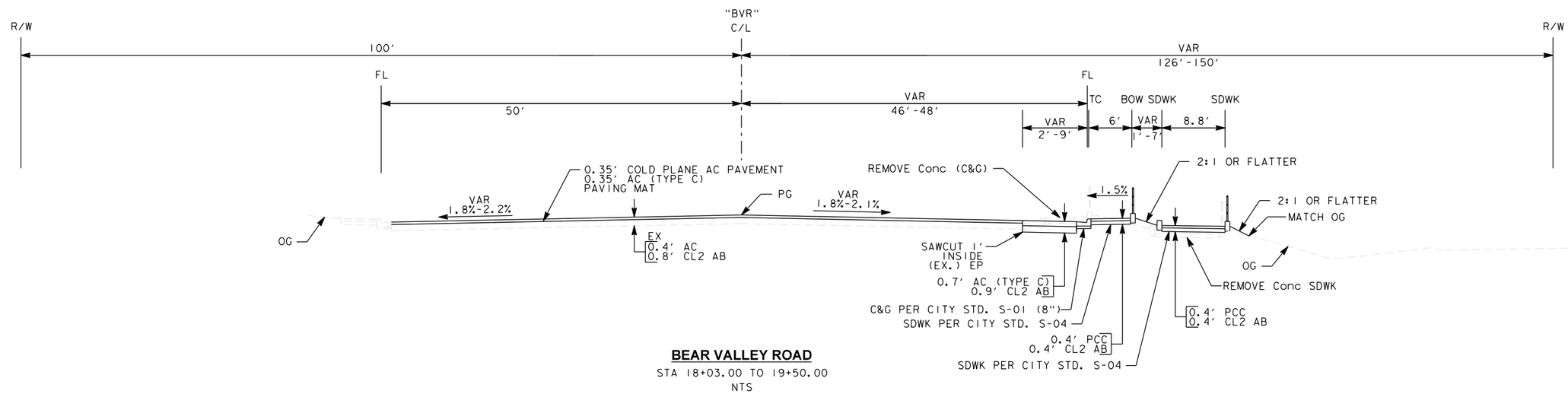

BEAR VALLEY ROAD

STA 18+03.00 TO 19+50.00
NTS

NO.	REVISION	BY	DATE

APPROVED BY: CITY ENGINEER — BRIAN GENGLER — DATE: — R.C.E. EXP. 03-31-16

DESIGNED: KRIS KOFOED
DRAWN: BRYAN FRASER
CHECKED: JUANN RAMOS

RECORD DRAWING DATE:
SCALE — HORIZ: N/A — VERT: N/A
PROJECT NO. XXXXX
CAD FILE: ...\511\2007_c001.dgn

CITY OF VICTORVILLE
ENGINEERING DIVISION
14343 CIVIC DRIVE,
VICTORVILLE, CA 92392
(760) 955-5158

DOKKEN ENGINEERING
110 BLUE RAVINE ROAD SUITE 200, FOLSOM CA. 916-858-0642

JUANN RAMOS, PROJECT ENGINEER — DATE

REGISTERED PROFESSIONAL ENGINEER — JUANN RAMOS — No. 61931 — Exp. 09/30/19 — CIVIL — STATE OF CALIFORNIA

BEAR VALLEY ROAD OH AT BNSF RAILROAD

TYPICAL SECTIONS

X-1

DWG. NO.

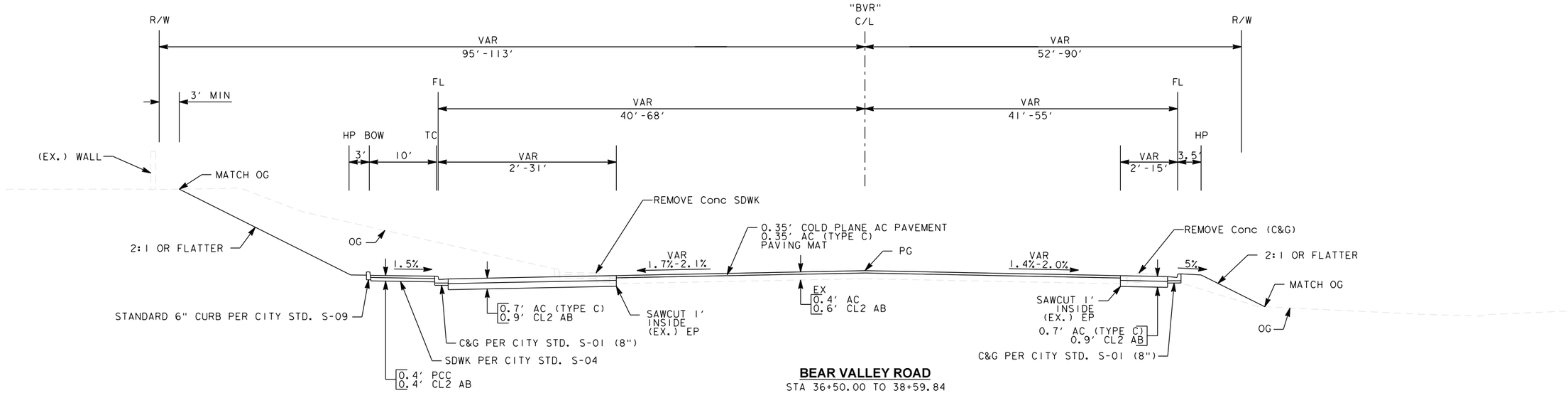

BEAR VALLEY ROAD
STA 36+50.00 TO 38+59.84
STA 40+28.69 TO 42+05.00
NTS

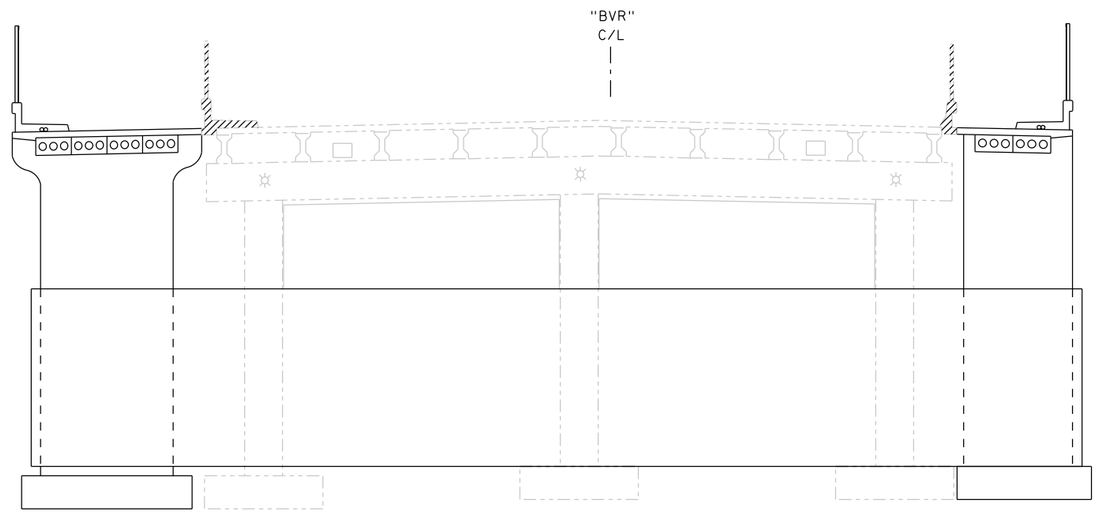

BEAR VALLEY ROAD
STA 28+61.97 TO 30+55.28
NTS

NOTES:

1. FOR BRIDGE DETAILS SEE BRIDGE PLANS.

NO.	REVISION	BY	DATE

APPROVED BY: CITY ENGINEER _____ BRIAN GENGLER DATE: _____ R.C.E. EXP. 03-31-16

DESIGNED: KRIS KOFOED

DRAWN: BRYAN FRASER

CHECKED: JUANN RAMOS

RECORD DRAWING DATE:

SCALE HORIZ: N/A VERT: N/A

PROJECT NO. XXXXX
CAD FILE: ...\S11\2007_co02.dgn

CITY OF VICTORVILLE
ENGINEERING DIVISION
14343 CIVIC DRIVE,
VICTORVILLE, CA 92392
(760) 955-5158

DOKKEN ENGINEERING
110 BLUE RAVINE ROAD SUITE 200, FOLSOM CA. 916-858-0642

JUANN RAMOS, PROJECT ENGINEER _____ DATE

REGISTERED PROFESSIONAL ENGINEER JUANN RAMOS No. 61931 Exp. 09/30/19 CIVIL STATE OF CALIFORNIA

BEAR VALLEY ROAD OH AT BNSF RAILROAD

TYPICAL SECTIONS

4 OF 81

X-2

DWG. NO.

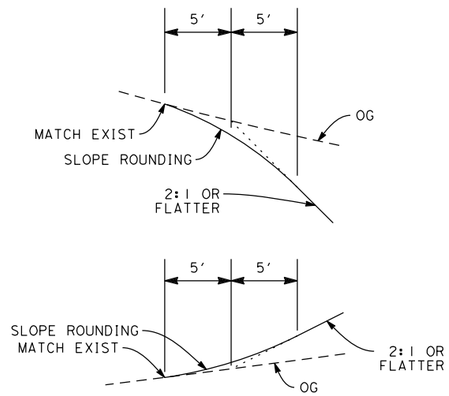

SLOPE ROUNDING DETAIL (TYPICAL)

NTS

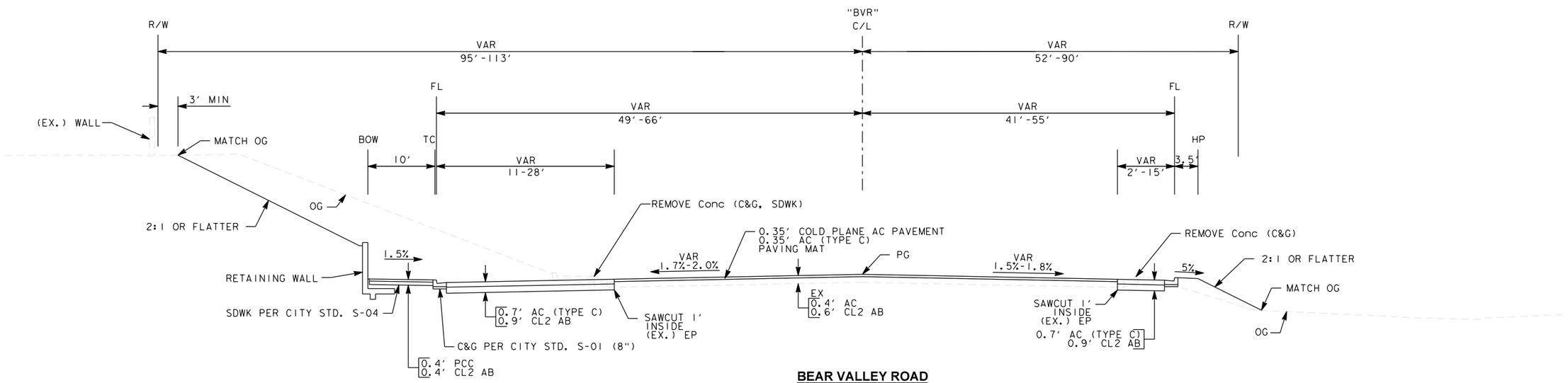

BEAR VALLEY ROAD

STA 38+59.84 TO 40+28.69

NTS

NOTES:

1. FOR RETAINING WALL DETAILS SEE CONSTRUCTION DETAILS.

NO.	REVISION	BY	DATE

APPROVED BY: CITY ENGINEER BRIAN GENGLER DATE: R.C.E. EXP. 03-31-16

DESIGNED: KRIS KOFOED

DRAWN: BRYAN FRASER

CHECKED: JUANN RAMOS

RECORD DRAWING DATE:

SCALE HORIZ: N/A VERT: N/A

PROJECT NO. XXXXX
CAD FILE: ...\511\2007_co03.dgn

CITY OF VICTORVILLE
ENGINEERING DIVISION
14343 CIVIC DRIVE,
VICTORVILLE, CA 92392
(760) 955-5158

DOKKEN ENGINEERING
110 BLUE RAVINE ROAD SUITE 200, FOLSOM CA. 916-858-0642

JUANN RAMOS, PROJECT ENGINEER DATE

REGISTERED PROFESSIONAL ENGINEER JUANN RAMOS No. 61931 Exp. 09/30/19 CIVIL STATE OF CALIFORNIA

BEAR VALLEY ROAD OH AT BNSF RAILROAD

TYPICAL SECTIONS

X-3

DWG. NO.

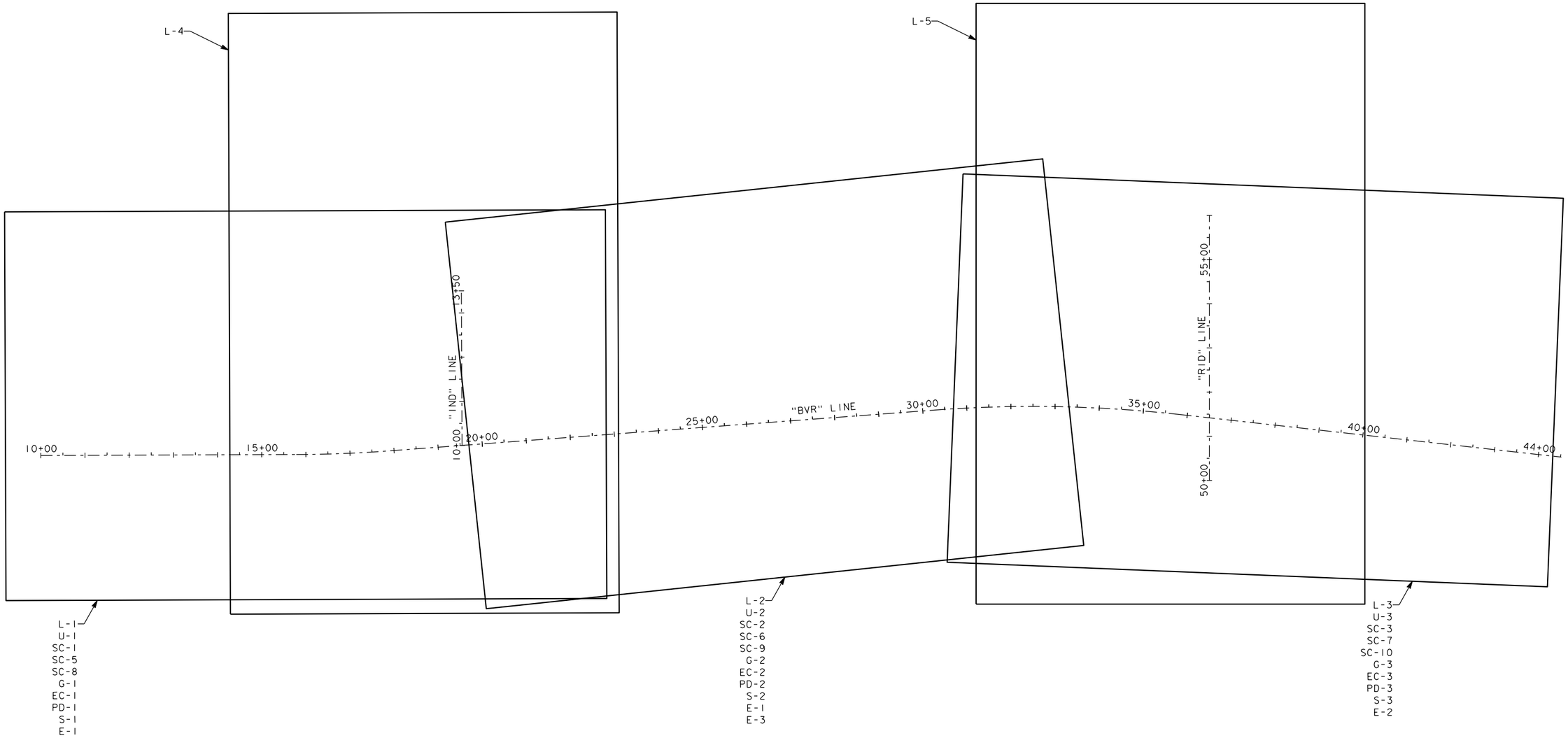

NO.	REVISION	BY	DATE

APPROVED BY: CITY ENGINEER — BRIAN GENGLER — DATE: — R.C.E. EXP. 03-31-16

DESIGNED: KRIS KOFOED

DRAWN: BRYAN FRASER

CHECKED: JUANN RAMOS

RECORD DRAWING DATE:

SCALE — HORIZ: N/A — VERT: N/A

PROJECT NO. XXXXX
CAD FILE: ...\511\2007_da01.dgn

CITY OF VICTORVILLE
ENGINEERING DIVISION
14343 CIVIC DRIVE,
VICTORVILLE, CA 92392
(760) 955-5158

DOKKEN ENGINEERING
110 BLUE RAVINE ROAD SUITE 200, FOLSOM CA. 916-858-0642

JUANN RAMOS, PROJECT ENGINEER — DATE

REGISTERED PROFESSIONAL ENGINEER — JUANN RAMOS — No. 61931 — Exp. 09/30/19 — CIVIL — STATE OF CALIFORNIA

BEAR VALLEY ROAD OH AT BNSF RAILROAD

KEYMAP

K-1

DWG. NO.

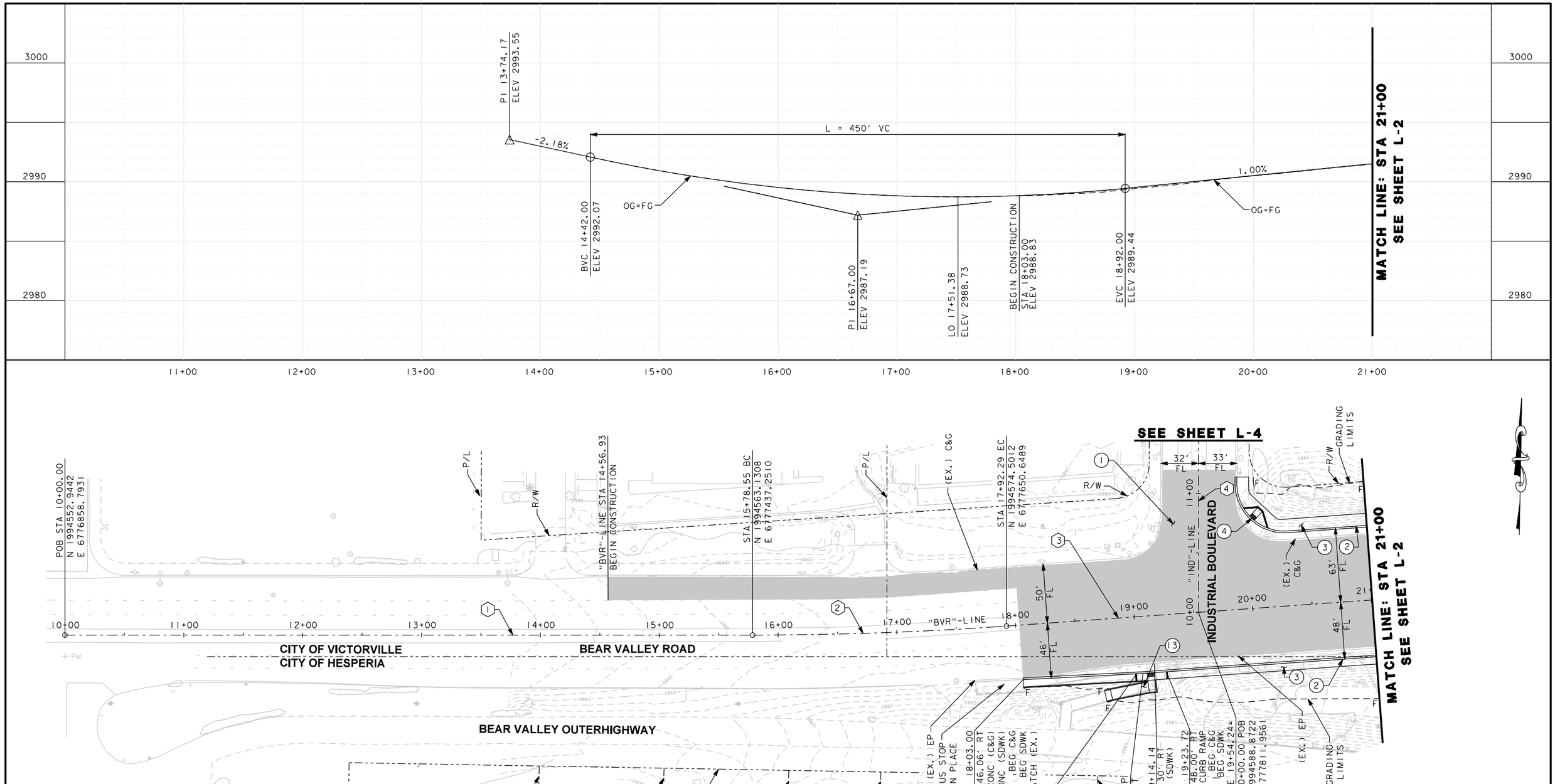

STREET CONSTRUCTION NOTES:

1. 0.35' COLD PLANE AC PAVEMENT/0.35' AC (TYPE A)/PAVING MAT.
2. CURB AND GUTTER PER CITY OF VICTORVILLE STANDARD S-01.
3. SIDEWALK PER CITY OF VICTORVILLE STANDARD S-04.
4. CURB RAMP PER CITY OF VICTORVILLE STANDARD S-11A.
13. BUS STOP PEDESTRIAN RAMP SEE CONSTRUCTION DETAIL SHEET CD-1.

"BVR"-LINE CURVE DATA				
	RADIUS	DELTA/BRNG	LENGTH	TANGENT
1		N88°59'28"E	578.55'	
2	3000.00'	4°04'56"	213.75'	106.92'
3		N84°54'32"E	1233.38'	
"IND"-LINE CURVE DATA				
4		S1°00'32"E	350.11'	

NO.	REVISION	BY	DATE

APPROVED BY: CITY ENGINEER BRIAN GENGLER DATE: R.C.E. EXP. 03-31-16

DESIGNED: KRIS KOFOED
DRAWN: BRYAN FRASER
CHECKED: JUANN RAMOS

RECORD DRAWING DATE:
SCALE HORIZ: 1" = 40' VERT: 1" = 4'
PROJECT NO. XXXXX
CAD FILE: ...\511\2007_ea01.dgn

CITY OF VICTORVILLE
ENGINEERING DIVISION
14343 CIVIC DRIVE,
VICTORVILLE, CA 92392
(760) 955-5158

DOKKEN ENGINEERING
110 BLUE RAVINE ROAD SUITE 200, FOLSOM CA. 916-858-0642

JUANN RAMOS, PROJECT ENGINEER DATE

REGISTERED PROFESSIONAL ENGINEER JUANN RAMOS No. 61931 Exp. 09/30/19 CIVIL STATE OF CALIFORNIA

BEAR VALLEY ROAD OH AT BNSF RAILROAD

STREET IMPROVEMENT PLAN

L-1

DWG. NO.

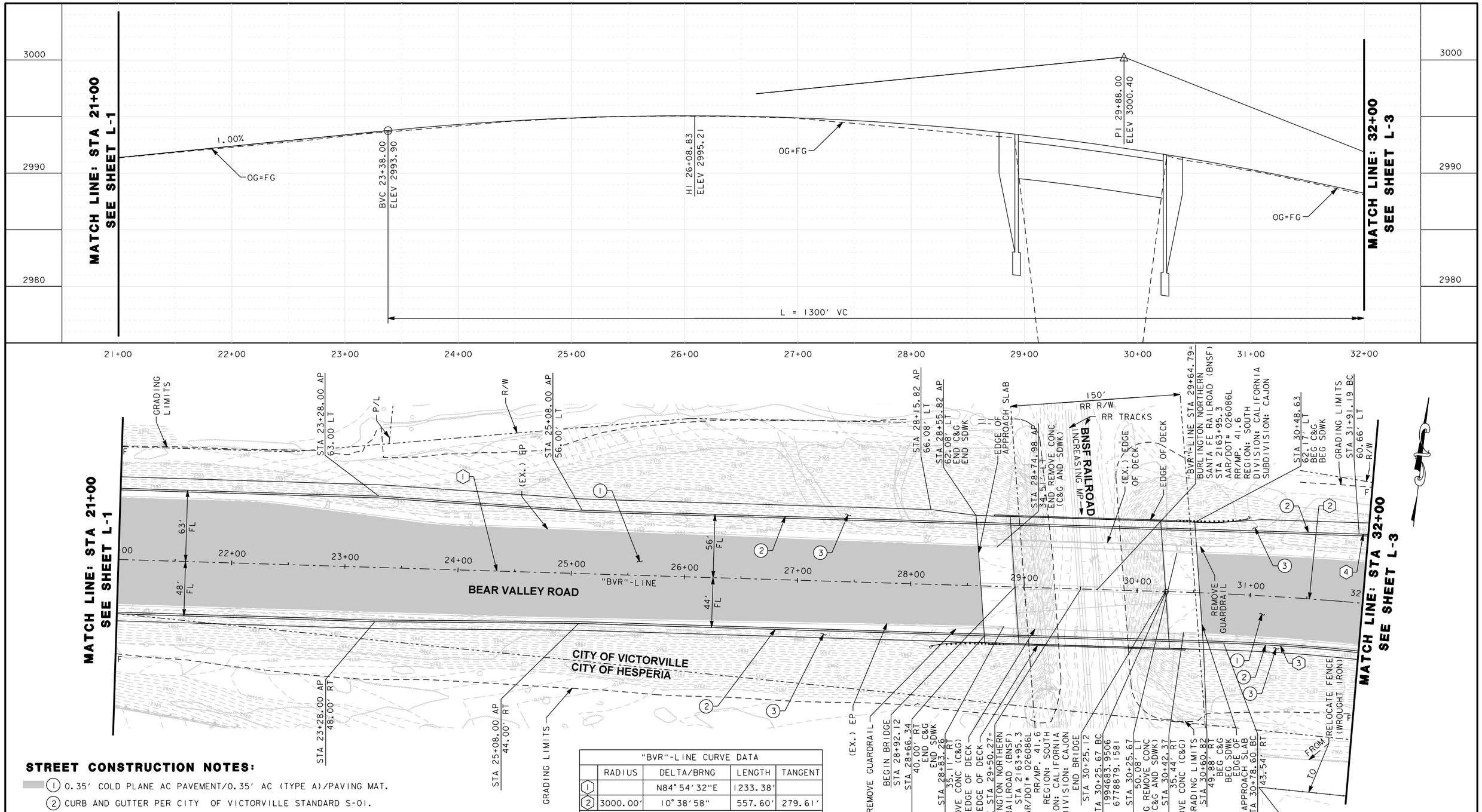

STREET CONSTRUCTION NOTES:

1. 0.35' COLD PLANE AC PAVEMENT/0.35' AC (TYPE A)/PAVING MAT.
2. CURB AND GUTTER PER CITY OF VICTORVILLE STANDARD S-01.
3. SIDEWALK PER CITY OF VICTORVILLE STANDARD S-04.

"BVR"-LINE CURVE DATA				
	RADIUS	DELTA/BRNG	LENGTH	TANGENT
1		N84°54'32"E	1233.38'	
2	3000.00'	10°38'58"	557.60'	279.61'
FLOW LINE CURVE DATA				
3	1480.00'	10°06'04"	260.92'	130.80'
4	1544.00'	11°37'01"	313.05'	157.07'

NO.	REVISION	BY	DATE

APPROVED BY: CITY ENGINEER — BRIAN GENGLER — DATE: — R.C.E. EXP. 03-31-16

DESIGNED: KRIS KOFOED
DRAWN: BRYAN FRASER
CHECKED: JUANN RAMOS

RECORD DRAWING DATE:
SCALE — HORIZ: 1" = 40' — VERT: 1" = 4'
PROJECT NO. XXXXX
CAD FILE: ...\511\2007_ea02.dgn

CITY OF VICTORVILLE
ENGINEERING DIVISION
14343 CIVIC DRIVE,
VICTORVILLE, CA 92392
(760) 955-5158

DOKKEN ENGINEERING
110 BLUE RAVINE ROAD SUITE 200, FOLSOM CA. 916-858-0642

JUANN RAMOS, PROJECT ENGINEER — DATE

REGISTERED PROFESSIONAL ENGINEER — JUANN RAMOS — No. 61931 — Exp. 09/30/19 — CIVIL — STATE OF CALIFORNIA

BEAR VALLEY ROAD OH AT BNSF RAILROAD

STREET IMPROVEMENT PLAN

8 OF 81

L-2

DWG. NO.

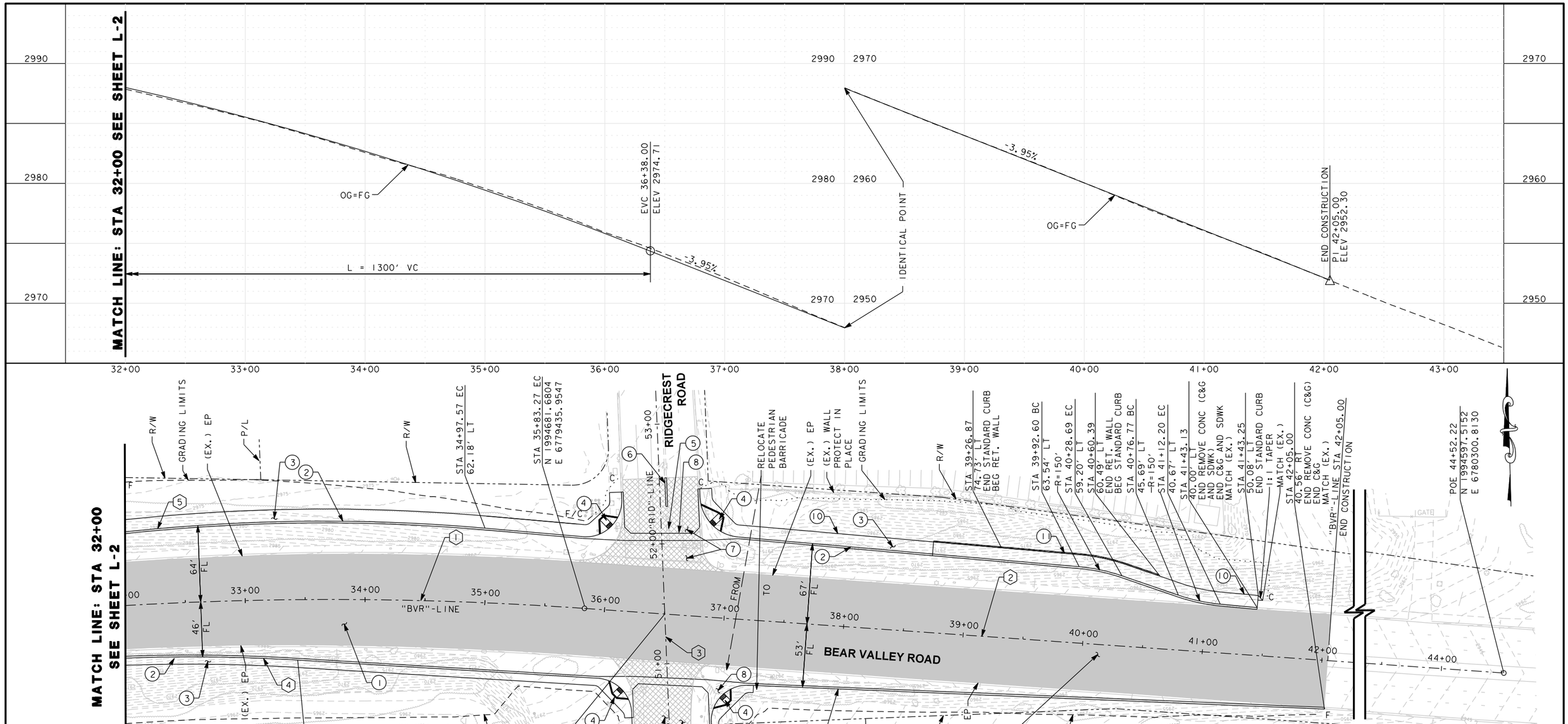

"BVR"-LINE CURVE DATA				
	RADIUS	DELTA/BRNG	LENGTH	TANGENT
1	3000.00'	10°38'58"	557.60'	279.61'
2		S84°26'30"E	868.94'	
"RID"-LINE CURVE DATA				
3		S0°48'05"E	600.00'	
FLOW LINE CURVE DATA				
4	1480.00'	10°06'04"	260.92'	130.80'
5	1544.00'	11°37'01"	313.05'	157.07'

STREET CONSTRUCTION NOTES:

1. 0.35' COLD PLANE AC PAVEMENT/0.35' AC (TYPE A)/PAVING MAT.
2. CURB AND GUTTER PER CITY OF VICTORVILLE STANDARD S-01.
3. SIDEWALK PER CITY OF VICTORVILLE STANDARD S-04.
4. CURB RAMP PER CITY OF VICTORVILLE STANDARD S-11A.
5. REMOVE CONCRETE CURB, SEE CD-2.
6. MEDIAN CURB PER CITY OF VICTORVILLE STANDARD S-09.
7. REMOVE BASE AND SURFACING.
8. CROSS GUTTER PER CITY OF VICTORVILLE STANDARD S-05.
9. CONCRETE DRIVEWAY PER DETAIL SHEET CD-2.
10. STANDARD CURB PER CITY OF VICTORVILLE STANDARD S-09.
11. RETAING WALL, SEE STRUCTURE PLANS.

NO.	REVISION	BY	DATE

APPROVED BY: CITY ENGINEER BRIAN GENGLER DATE: R.C.E. EXP. 03-31-16

DESIGNED: KRIS KOFOED
DRAWN: BRYAN FRASER
CHECKED: JUANN RAMOS

RECORD DRAWING DATE:
SCALE HORIZ: 1" = 40' VERT: 1" = 4'
PROJECT NO. XXXXX
CAD FILE: ...\511\2007_ea03.dgn

CITY OF VICTORVILLE
ENGINEERING DIVISION
14343 CIVIC DRIVE,
VICTORVILLE, CA 92392
(760) 955-5158

DOKKEN ENGINEERING
110 BLUE RAVINE ROAD SUITE 200, FOLSOM CA. 916-858-0642
JUANN RAMOS, PROJECT ENGINEER DATE

REGISTERED PROFESSIONAL ENGINEER JUANN RAMOS No. 61931 Exp. 09/30/19 CIVIL STATE OF CALIFORNIA

BEAR VALLEY ROAD OH AT BNSF RAILROAD

STREET IMPROVEMENT PLAN

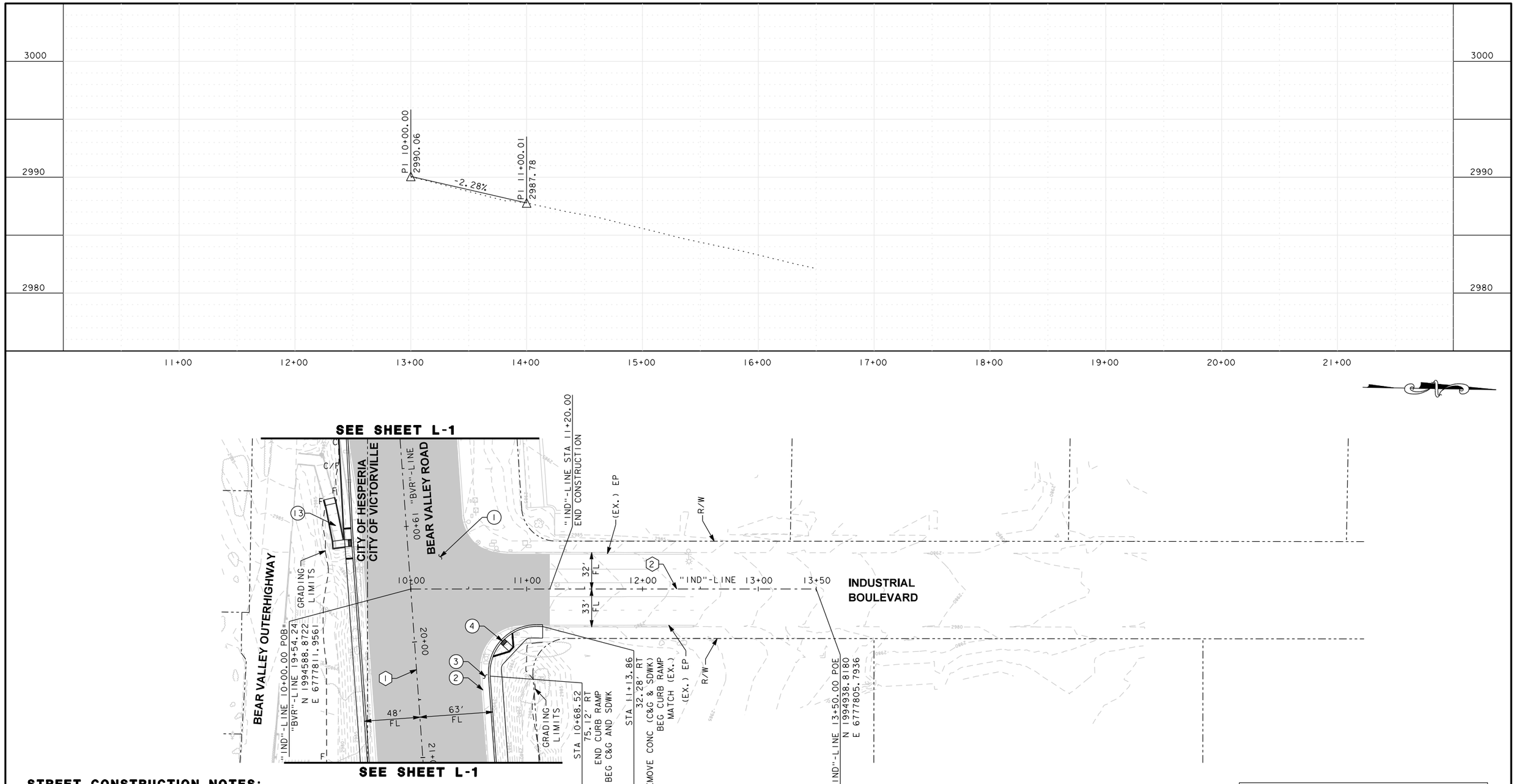

STREET CONSTRUCTION NOTES:

1. 0.35' COLD PLANE AC PAVEMENT/0.35' AC (TYPE A)/PAVING MAT.
2. CURB AND GUTTER PER CITY OF VICTORVILLE STANDARD S-01.
3. SIDEWALK PER CITY OF VICTORVILLE STANDARD S-04.
4. CURB RAMP PER CITY OF VICTORVILLE STANDARD S-11A.
13. BUS STOP PEDESTRIAN RAMP SEE CONSTRUCTION DETAIL SHEET CD-1.

"BVR"-LINE CURVE DATA				
	RADIUS	DELTA/BRNG	LENGTH	TANGENT
1		N84° 54' 32"E	1233.38'	
"IND"-LINE CURVE DATA				
2		S1° 00' 32"E	350.00'	

NO.	REVISION	BY	DATE

APPROVED BY: CITY ENGINEER BRIAN GENGLER DATE: R.C.E. EXP. 03-31-16

DESIGNED: KRIS KOFOED
DRAWN: BRYAN FRASER
CHECKED: JUANN RAMOS

RECORD DRAWING DATE:
SCALE HORIZ: 1" = 40' VERT: 1" = 4'
PROJECT NO. XXXXX
CAD FILE: ...\511\2007_ea04.dgn

CITY OF VICTORVILLE
ENGINEERING DIVISION
14343 CIVIC DRIVE,
VICTORVILLE, CA 92392
(760) 955-5158

DOKKEN ENGINEERING
110 BLUE RAVINE ROAD SUITE 200, FOLSOM CA. 916-858-0642

JUANN RAMOS, PROJECT ENGINEER DATE

REGISTERED PROFESSIONAL ENGINEER JUANN RAMOS No. 61931 Exp. 09/30/19 CIVIL STATE OF CALIFORNIA

BEAR VALLEY ROAD OH AT BNSF RAILROAD

STREET IMPROVEMENT PLAN

L-4

DWG. NO.

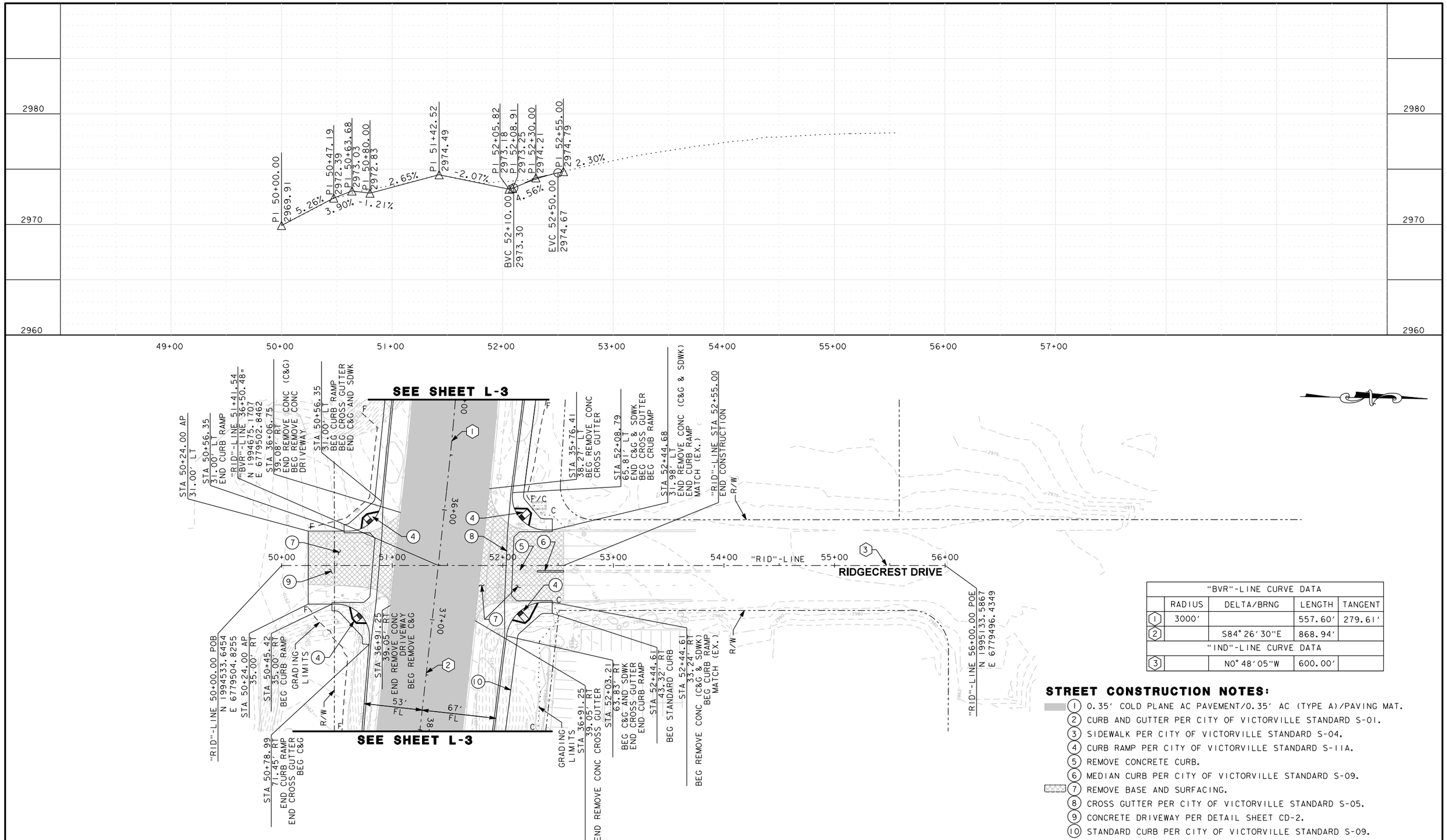

"BVR"-LINE CURVE DATA				
	RADIUS	DELTA/BRNG	LENGTH	TANGENT
1	3000'		557.60'	279.61'
2		S84°26'30"E	868.94'	
"IND"-LINE CURVE DATA				
3		N0°48'05"W	600.00'	

STREET CONSTRUCTION NOTES:

1. 0.35' COLD PLANE AC PAVEMENT/0.35' AC (TYPE A)/PAVING MAT.
2. CURB AND GUTTER PER CITY OF VICTORVILLE STANDARD S-01.
3. SIDEWALK PER CITY OF VICTORVILLE STANDARD S-04.
4. CURB RAMP PER CITY OF VICTORVILLE STANDARD S-11A.
5. REMOVE CONCRETE CURB.
6. MEDIAN CURB PER CITY OF VICTORVILLE STANDARD S-09.
7. REMOVE BASE AND SURFACING.
8. CROSS GUTTER PER CITY OF VICTORVILLE STANDARD S-05.
9. CONCRETE DRIVEWAY PER DETAIL SHEET CD-2.
10. STANDARD CURB PER CITY OF VICTORVILLE STANDARD S-09.

NO.	REVISION	BY	DATE

APPROVED BY: CITY ENGINEER — BRIAN GENGLER — DATE: — R.C.E. EXP. 03-31-16

DESIGNED: KRIS KOFOED
DRAWN: BRYAN FRASER
CHECKED: JUANN RAMOS

RECORD DRAWING DATE:
SCALE — HORIZ: 1" = 40' — VERT: 1" = 4'
PROJECT NO. XXXXX
CAD FILE: ...\511\2007_ea05.dgn

CITY OF VICTORVILLE
ENGINEERING DIVISION
14343 CIVIC DRIVE,
VICTORVILLE, CA 92392
(760) 955-5158

DOKKEN ENGINEERING
110 BLUE RAVINE ROAD SUITE 200, FOLSOM CA. 916-858-0642

JUANN RAMOS, PROJECT ENGINEER — DATE

REGISTERED PROFESSIONAL ENGINEER — JUANN RAMOS — No. 61931 — Exp. 09/30/19 — CIVIL — STATE OF CALIFORNIA

BEAR VALLEY ROAD OH AT BNSF RAILROAD

STREET IMPROVEMENT PLAN

L-5

DWG. NO.

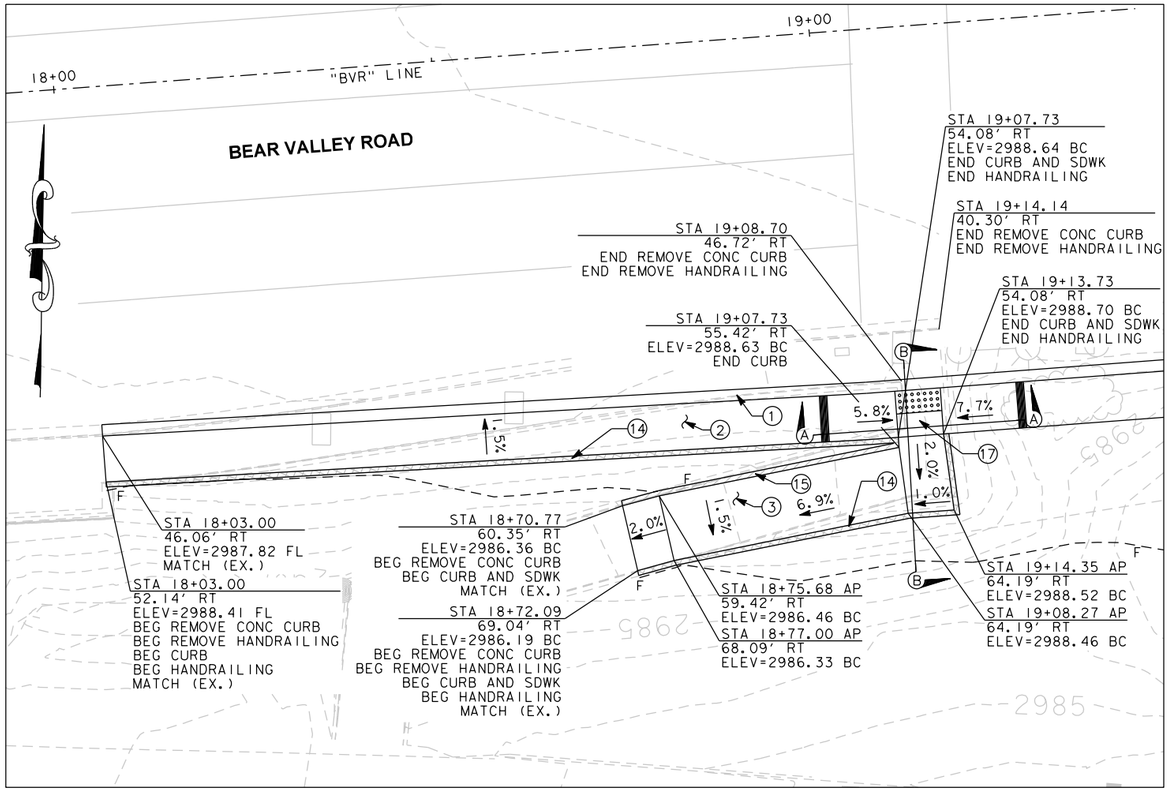

BUS STOP PEDESTRIAN RAMP
NTS

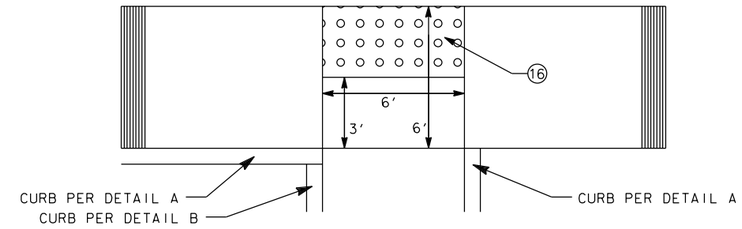

CURB RAMP PLAN VEIW

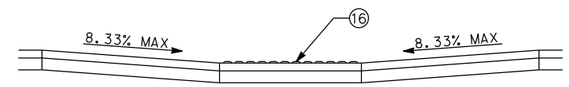

SECTION A-A

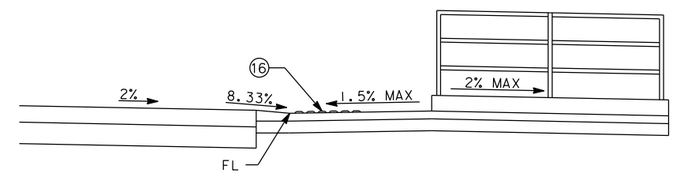

SECTION B-B

NOTES:

1. CURB AND GUTTER PER CITY OF VICTORVILLE STANDARD S-01.
2. SIDEWALK PER CITY OF VICTORVILLE STANDARD S-04.
14. CURB AND HANDRAILING, SEE DETAIL A THIS SHEET.
15. CURB, SEE DETAIL B, THIS SHEET.
16. DETECTABLE WARNING SURFACE PER CITY OF VICTORVILLE STANDARD S-11A.
17. CURB RAMP PER DETAILS THIS SHEET.

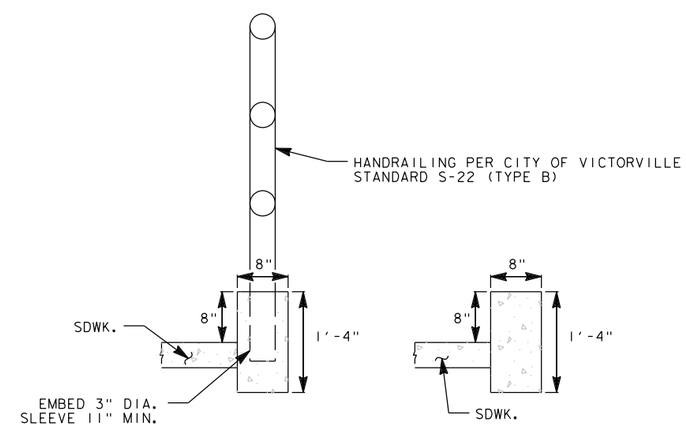

DETAIL A **DETAIL B**

NO.	REVISION	BY	DATE

APPROVED BY: CITY ENGINEER _____ BRIAN GENGLER DATE: _____ R.C.E. EXP. 03-31-16

DESIGNED: KRIS KOFOED
DRAWN: BRYAN FRASER
CHECKED: JUANN RAMOS

RECORD DRAWING DATE:
SCALE HORIZ: N/A VERT: N/A
PROJECT NO. XXXXX
CAD FILE: ...\511\2007_ga01.dgn

CITY OF VICTORVILLE
ENGINEERING DIVISION
14343 CIVIC DRIVE,
VICTORVILLE, CA 92392
(760) 955-5158

DOKKEN ENGINEERING
110 BLUE RAVINE ROAD SUITE 200, FOLSOM CA. 916-858-0642

JUANN RAMOS, PROJECT ENGINEER _____ DATE

REGISTERED PROFESSIONAL ENGINEER JUANN RAMOS No. 61931 Exp. 09/30/19 CIVIL STATE OF CALIFORNIA

BEAR VALLEY ROAD OH AT BNSF RAILROAD

CONSTRUCTION DETAILS

12 OF 81

CD-1

DWG. NO.

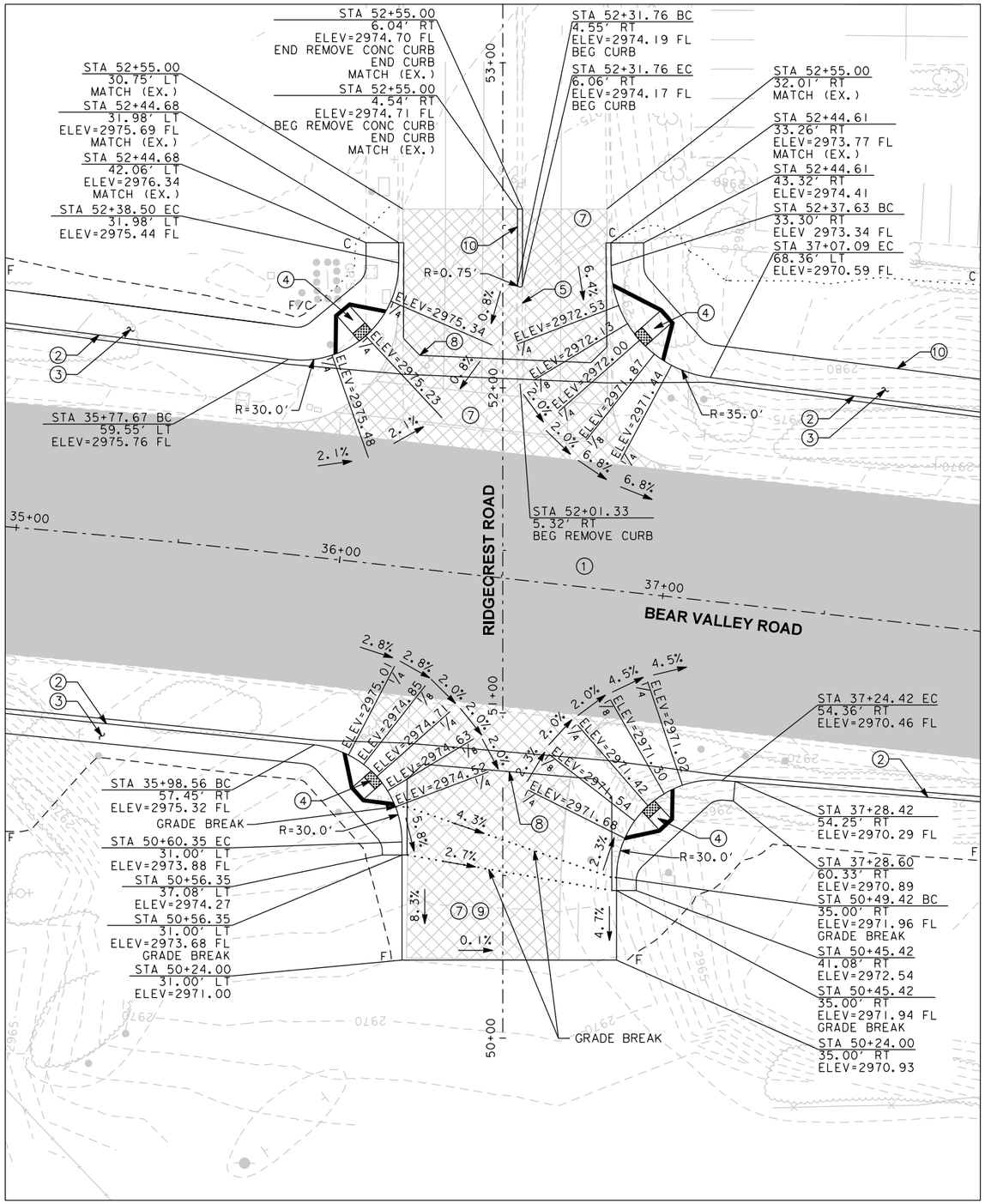

NOTES:

1. 0.35' COLD PLANE AC PAVEMENT/0.35' AC (TYPE A)/PAVING MAT.
2. CURB AND GUTTER PER CITY OF VICTORVILLE STANDARD S-01.
3. SIDEWALK PER CITY OF VICTORVILLE STANDARD S-04.
4. CURB RAMP PER CITY OF VICTORVILLE STANDARD S-11A.
5. REMOVE CONCRETE CURB.
7. REMOVE BASE AND SURFACING.
8. CROSS GUTTER PER CITY OF VICTORVILLE STANDARD S-05.
9. CONCRETE DRIVEWAY, PLACE 8" PCC OVER 8" AB.
10. STANDARD CURB PER CITY OF VICTORVILLE STANDARD S-09.

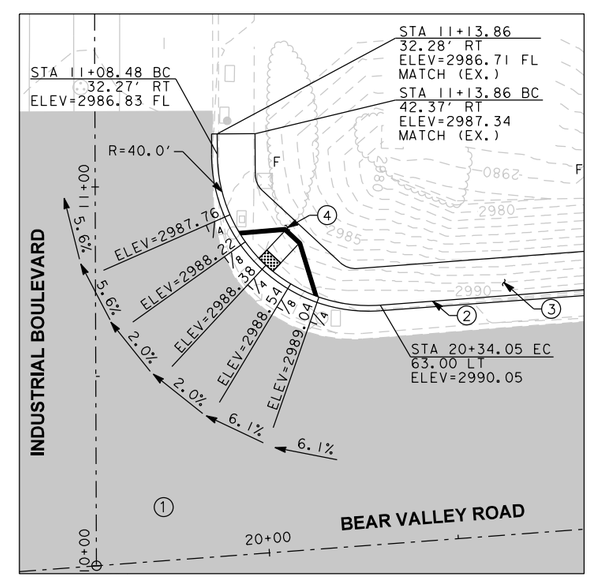

NO.	REVISION	BY	DATE

APPROVED BY: CITY ENGINEER — BRIAN GENGLER — DATE: — R.C.E. EXP. 03-31-16

DESIGNED: KRIS KOFOED
DRAWN: BRYAN FRASER
CHECKED: JUANN RAMOS

RECORD DRAWING DATE:
SCALE — HORIZ: 1" = 20' — VERT: N/A
PROJECT NO. XXXXX
CAD FILE: ...\511\2007_ga02.dgn

CITY OF VICTORVILLE
ENGINEERING DIVISION
14343 CIVIC DRIVE,
VICTORVILLE, CA 92392
(760) 955-5158

DOKKEN ENGINEERING
110 BLUE RAVINE ROAD SUITE 200, FOLSOM CA. 916-858-0642

JUANN RAMOS, PROJECT ENGINEER — DATE

REGISTERED PROFESSIONAL ENGINEER — JUANN RAMOS — No. 61931 — Exp. 09/30/19 — CIVIL — STATE OF CALIFORNIA

BEAR VALLEY ROAD OH AT BNSF RAILROAD

CONSTRUCTION DETAILS

CD-2

DWG. NO.

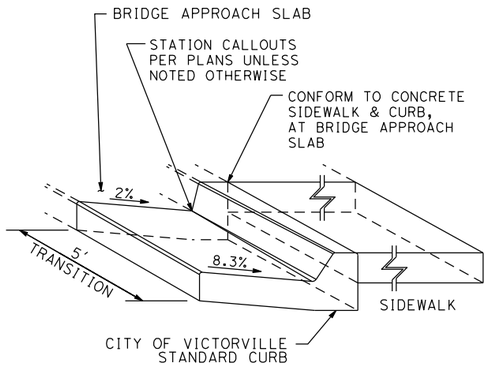

CURB TRANSITION DETAIL

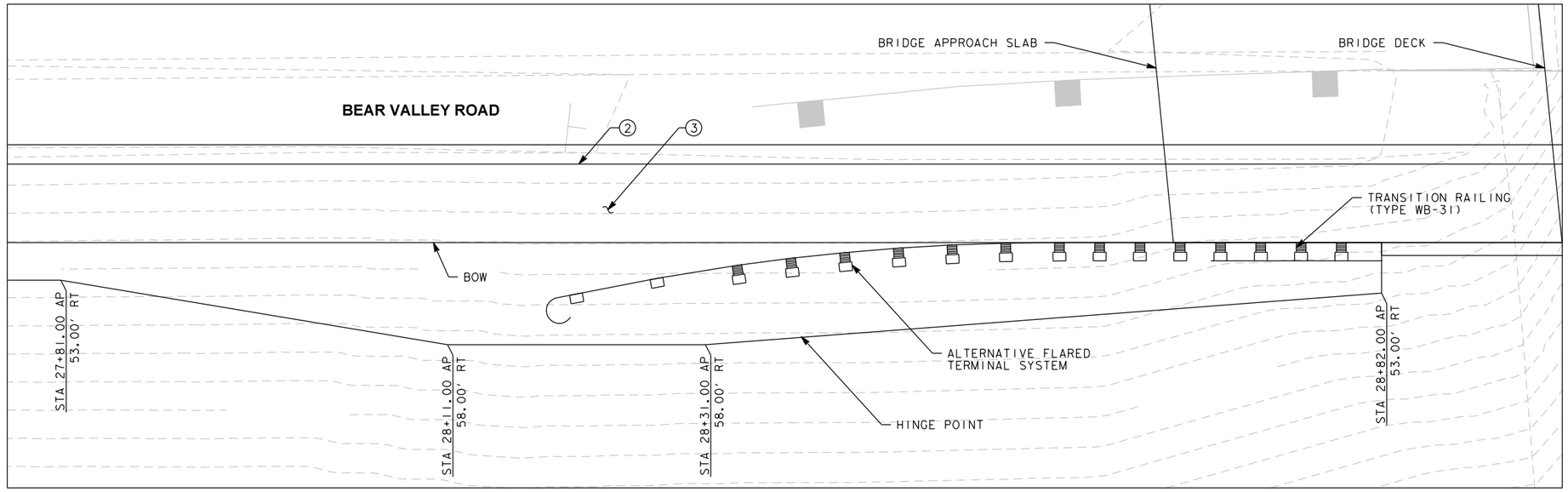

EASTBOUND TERMINAL SYSTEM
NTS

NOTES:

2. CURB AND GUTTER PER CITY OF VICTORVILLE STANDARD S-01.
3. SIDEWALK PER CITY OF VICTORVILLE STANDARD S-04.

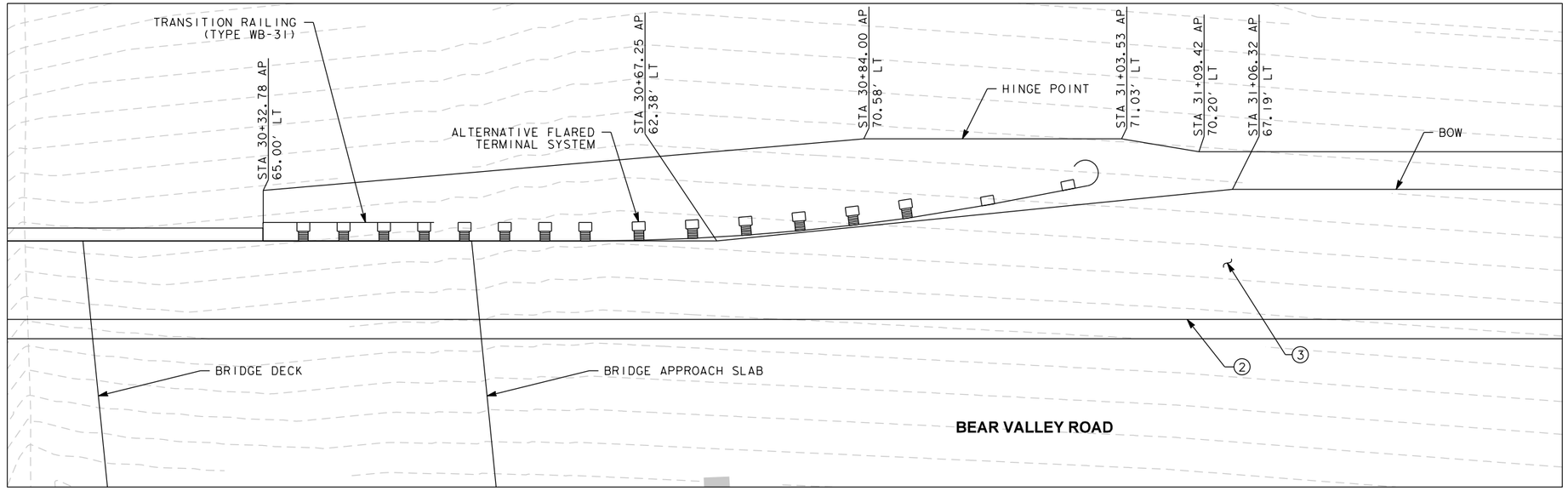

WESTBOUND TERMINAL SYSTEM
NTS

NO.	REVISION	BY	DATE

APPROVED BY: CITY ENGINEER — BRIAN GENGLER — DATE: — R.C.E. EXP. 03-31-16

DESIGNED: KRIS KOFOED
DRAWN: BRYAN FRASER
CHECKED: JUANN RAMOS

RECORD DRAWING DATE:
SCALE — HORIZ: 1" = 20' — VERT: N/A
PROJECT NO. XXXXX
CAD FILE: ...\5112007_gp03.dgn

CITY OF VICTORVILLE
ENGINEERING DIVISION
14343 CIVIC DRIVE,
VICTORVILLE, CA 92392
(760) 955-5158

DOKKEN ENGINEERING
110 BLUE RAVINE ROAD SUITE 200, FOLSOM CA. 916-858-0642
JUANN RAMOS, PROJECT ENGINEER — DATE

REGISTERED PROFESSIONAL ENGINEER — JUANN RAMOS — No. 61931 — Exp. 09/30/19 — CIVIL — STATE OF CALIFORNIA

BEAR VALLEY ROAD OH AT BNSF RAILROAD

CONSTRUCTION DETAILS

NOTES:

1. ALL DISTANCES AND STATIONING BASED ON "BVR" LINE

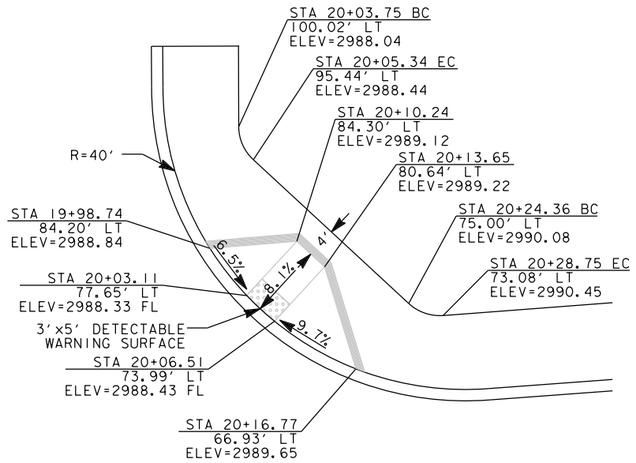

NORTH EAST CURB RAMP DETAIL
"INDUSTRIAL BLVD" AND "BEAR VALLEY RD"
INSTERSECTION

NOT TO SCALE

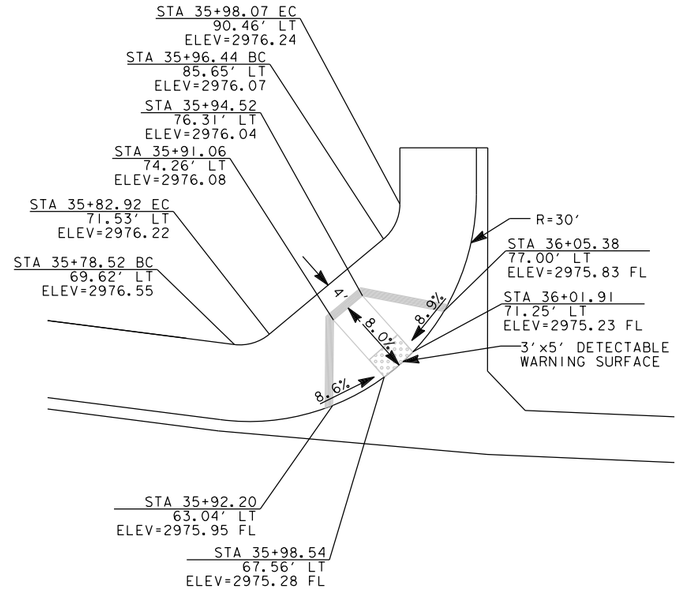

NORTH WEST CURB RAMP DETAIL
"RIDGECREST RD" AND "BEAR VALLEY RD"
INSTERSECTION

NOT TO SCALE

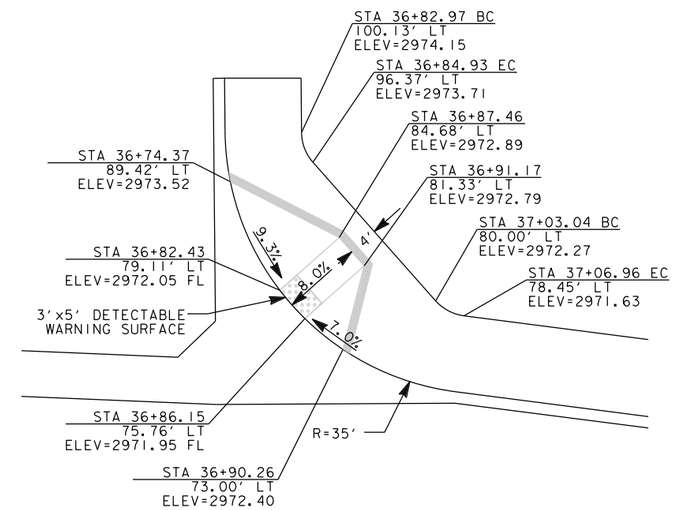

NORTH EAST CURB RAMP DETAIL
"RIDGECREST RD" AND "BEAR VALLEY RD"
INSTERSECTION

NOT TO SCALE

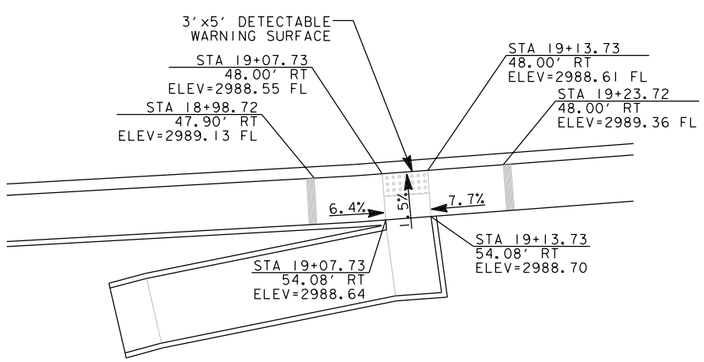

SOUTH WEST CURB RAMP DETAIL
"INDUSTRIAL BLVD" AND "BEAR VALLEY RD"
INSTERSECTION

NOT TO SCALE

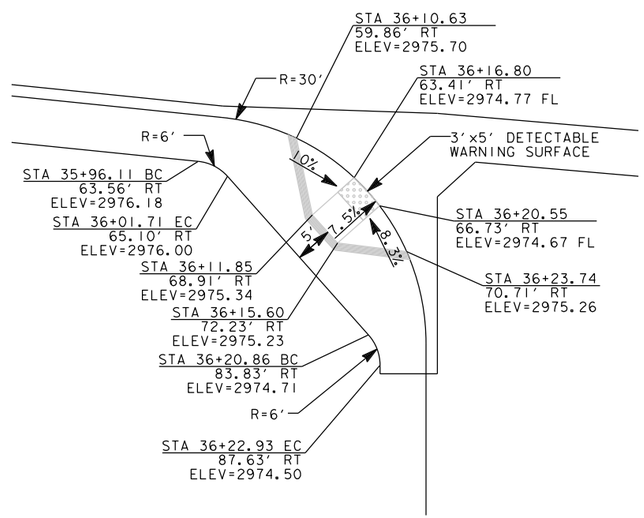

SOUTH WEST CURB RAMP DETAIL
"RIDGECREST RD" AND "BEAR VALLEY RD"
INSTERSECTION

NOT TO SCALE

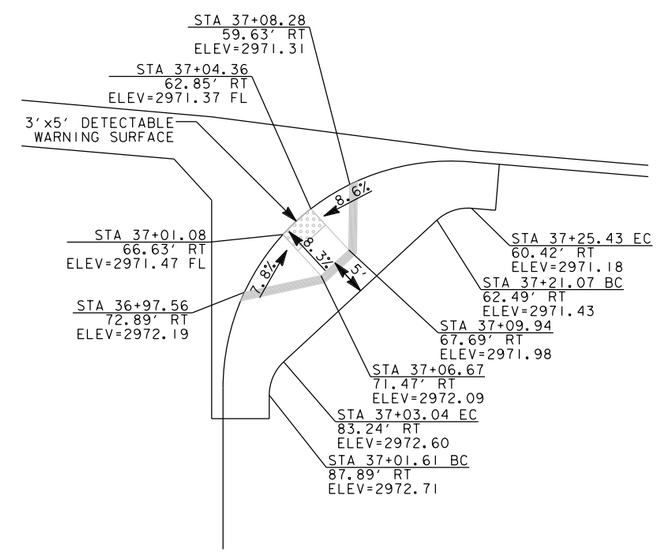

SOUTH EAST CURB RAMP DETAIL
"RIDGECREST RD" AND "BEAR VALLEY RD"
INSTERSECTION

NOT TO SCALE

NO.	REVISION	BY	DATE

APPROVED BY: CITY ENGINEER BRIAN GENGLER DATE: R.C.E. EXP. 03-31-16

DESIGNED: KRIS KOFOED
DRAWN: BRYAN FRASER
CHECKED: JUANN RAMOS

RECORD DRAWING DATE:
SCALE HORIZ: N/A VERT: N/A
PROJECT NO. XXXXX
CAD FILE: ...\511\2007_go04.dgn

CITY OF VICTORVILLE
ENGINEERING DIVISION
14343 CIVIC DRIVE,
VICTORVILLE, CA 92392
(760) 955-5158

DOKKEN ENGINEERING
110 BLUE RAVINE ROAD SUITE 200, FOLSOM CA. 916-858-0642

JUANN RAMOS, PROJECT ENGINEER DATE

REGISTERED PROFESSIONAL ENGINEER JUANN RAMOS No. 61931 Exp. 09/30/19 CIVIL STATE OF CALIFORNIA

BEAR VALLEY ROAD OH AT BNSF RAILROAD

CONSTRUCTION DETAILS

CD-4

DWG. NO.

LT FL ELEVATION, OFFSET & STA

2990.19	63.00
2990.37	63.00
2990.55	63.00

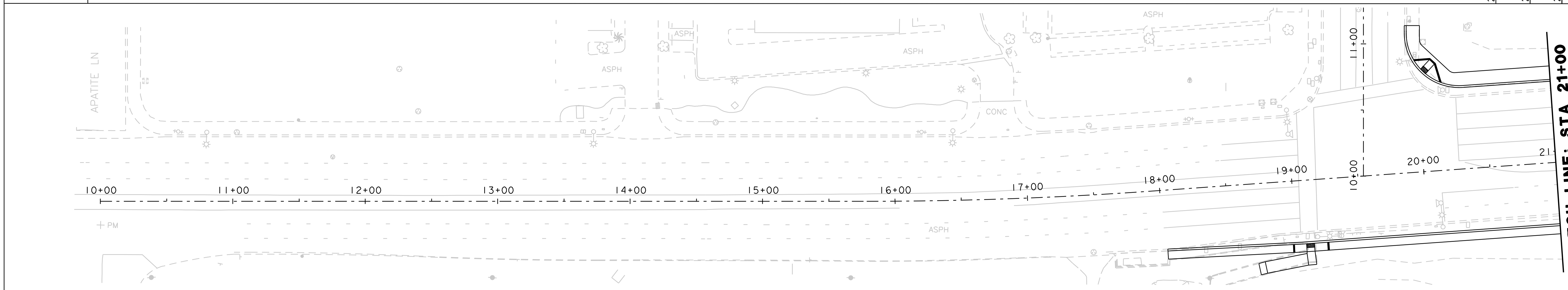

RT FL ELEVATION, OFFSET & STA

2987.65	45.50
2987.80	46.00
2987.82	46.48
2988.03	46.96
2988.15	47.44
2988.22	47.92
2988.62	48.00
2988.86	48.00
2989.20	48.00
2989.52	48.00
2989.73	48.00
2989.99	48.00
2990.23	48.00
2990.44	48.00

C&G FLOWLINE DETAILS
STA 17+75 TO 21+00

LT FL ELEVATION, OFFSET & STA

2990.75	63.00
2990.95	63.00
2991.17	63.00
2991.43	63.00
2991.70	63.00
2991.93	63.00
2992.12	63.00
2992.35	63.00
2992.58	63.00
2992.82	62.08
2993.07	61.03
2993.28	59.98
2993.46	58.93
2993.61	57.89
2993.75	56.84
2993.86	56.00
2993.93	56.00
2993.98	56.00
2994.00	56.00
2994.01	56.00
2993.99	56.00
2993.96	56.00
2993.91	56.00
2993.84	56.00
2993.72	56.00
2993.59	56.00
2993.43	56.00
2993.27	56.00
2992.93	56.00
2992.51	56.00
2989.66	56.41
2989.16	56.94
2988.67	57.68
2988.21	58.63
2987.73	59.79
2987.24	61.14

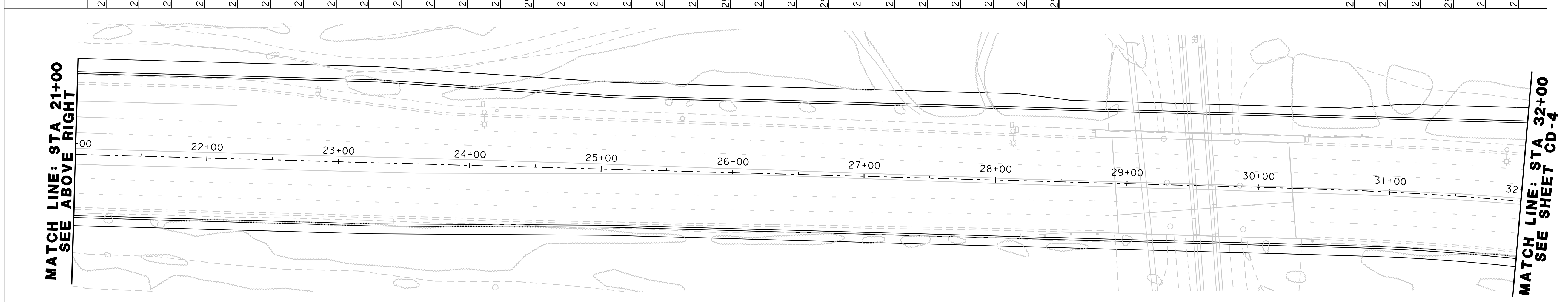

RT FL ELEVATION, OFFSET & STA

2990.64	48.00
2990.80	48.00
2991.01	48.00
2991.27	48.00
2991.53	48.00
2991.82	48.00
2992.09	48.00
2992.33	48.00
2992.57	48.00
2992.83	47.47
2993.08	46.87
2993.30	46.28
2993.51	45.68
2993.67	45.08
2993.76	44.48
2993.85	44.00
2993.93	44.00
2993.98	44.00
2994.02	44.00
2994.05	44.00
2994.08	44.00
2994.11	44.00
2994.14	44.00
2994.13	44.00
2994.01	44.00
2993.88	44.00
2993.67	44.00
2993.47	44.00
2993.24	44.00
2992.95	44.00
2989.93	43.60
2989.51	43.24
2989.06	43.09
2988.56	43.13
2988.02	43.39
2987.45	43.84

C&G FLOWLINE DETAILS
STA 21+00 TO 32+00

NOTES:

1. ALL MEASUREMENTS TAKEN AT 25 FT INTERVALS, PERPENDICULAR TO THE "BVR"-LINE, AND MEASURED TO THE FLOW LINE.

NO.	REVISION	BY	DATE

APPROVED BY: CITY ENGINEER BRIAN GENGLER DATE: R.C.E. EXP. 03-31-16

DESIGNED: KRIS KOFOED
DRAWN: BRYAN FRASER
CHECKED: JUANN RAMOS

RECORD DRAWING DATE:
SCALE HORIZ: 1" = 40' VERT: N/A
PROJECT NO. XXXXX
CAD FILE: ...\511\2007_ga05.dgn

CITY OF VICTORVILLE
ENGINEERING DIVISION
14343 CIVIC DRIVE,
VICTORVILLE, CA 92392
(760) 955-5158

DOKKEN ENGINEERING
110 BLUE RAVINE ROAD SUITE 200, FOLSOM CA. 916-858-0642
JUANN RAMOS, PROJECT ENGINEER DATE

REGISTERED PROFESSIONAL ENGINEER JUANN RAMOS No. 61931 Exp. 09/30/19 CIVIL STATE OF CALIFORNIA

BEAR VALLEY ROAD OH AT BNSF RAILROAD

CONSTRUCTION DETAILS

DWG. NO. CD-5

LT FL ELEVATION	LT FL OFFSET
2986.69	62.37
2986.07	63.39
2985.41	64.20
2984.69	64.80
2984.00	65.20
2983.36	65.38
2982.66	65.35
2981.91	65.11
2981.15	64.66
2980.37	64.01
2979.56	63.14
2978.70	62.07
2977.84	61.03
2976.97	60.21
2976.31	59.61
2970.06	68.06
2969.02	67.64
2967.98	67.21
2967.02	66.79
2966.07	66.37
2965.13	65.95
2964.17	65.53
2963.10	65.10
2962.07	64.68
2961.13	64.26
2960.18	63.84
2959.22	63.23
2958.30	59.44
2957.42	52.82
2956.52	46.16
2955.59	41.42
2954.61	40.39
2953.74	39.99

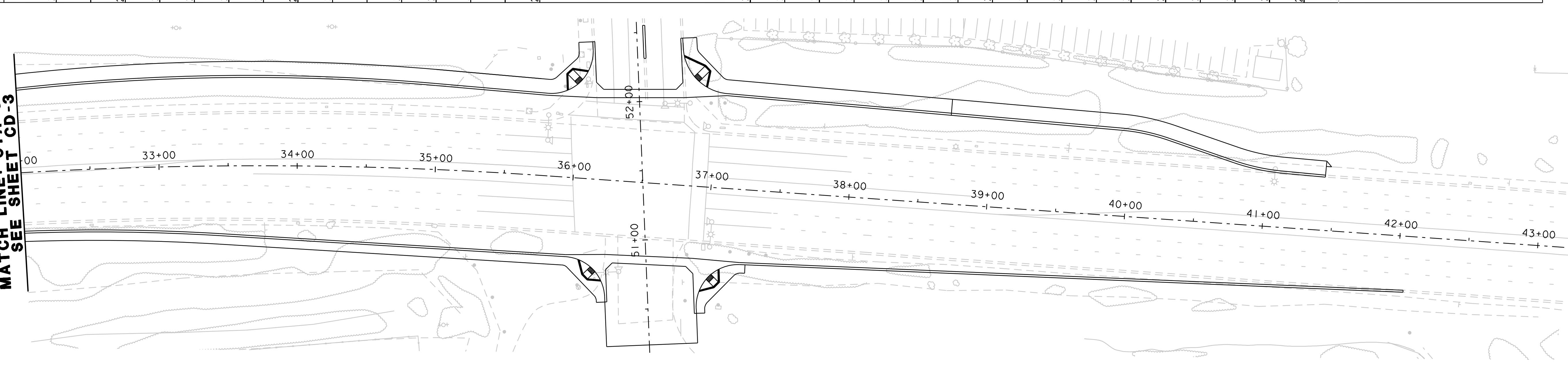

RT FL ELEVATION	RT FL OFFSET
2986.84	44.51
2986.20	45.38
2985.55	46.45
2984.90	47.72
2984.19	49.21
2983.43	50.88
2982.67	52.45
2981.92	53.82
2981.15	54.98
2980.36	55.94
2979.55	56.70
2978.68	57.24
2977.81	57.59
2976.98	57.73
2976.15	57.66
2970.43	54.35
2969.41	53.63
2968.37	52.91
2967.39	52.19
2966.43	51.47
2965.45	50.76
2964.46	50.04
2963.44	49.32
2962.44	48.60
2961.49	47.89
2960.52	47.17
2959.51	46.45
2958.55	45.73
2957.60	45.01
2956.58	44.30
2955.54	43.58
2954.55	42.86
2953.55	42.14
2952.60	41.42
2951.64	40.71
2950.64	40.49

C&G FLOWLINE DETAILS
STA 32+00 TO 42+25

NOTES:

1. ALL MEASUREMENTS TAKEN AT 25 FT INTERVALS, PERPENDICULAR TO THE "BVR"-LINE, AND MEASURED TO THE FLOW LINE.

NO.	REVISION	BY	DATE

APPROVED BY: CITY ENGINEER BRIAN GENGLER DATE: R.C.E. EXP. 03-31-16

DESIGNED: KRIS KOFOED
DRAWN: BRYAN FRASER
CHECKED: JUANN RAMOS

RECORD DRAWING DATE:
SCALE HORIZ: 1" = 40' VERT: N/A
PROJECT NO. XXXXX
CAD FILE: ...\511\2007_ga06.dgn

CITY OF VICTORVILLE
ENGINEERING DIVISION
14343 CIVIC DRIVE,
VICTORVILLE, CA 92392
(760) 955-5158

CITY OF VICTORVILLE INCORPORATED SEPT 21, 1962 HOME OF THE SAN BERNARDINO COUNTY FAIR CALIFORNIA

DOKKEN ENGINEERING
110 BLUE RAVINE ROAD SUITE 200, FOLSOM CA. 916-858-0642
JUANN RAMOS, PROJECT ENGINEER DATE

REGISTERED PROFESSIONAL ENGINEER JUANN RAMOS No. 61931 Exp. 09/30/19 CIVIL STATE OF CALIFORNIA

BEAR VALLEY ROAD OH AT BNSF RAILROAD

CONSTRUCTION DETAILS

17 OF 81
CD-6
DWG. NO.

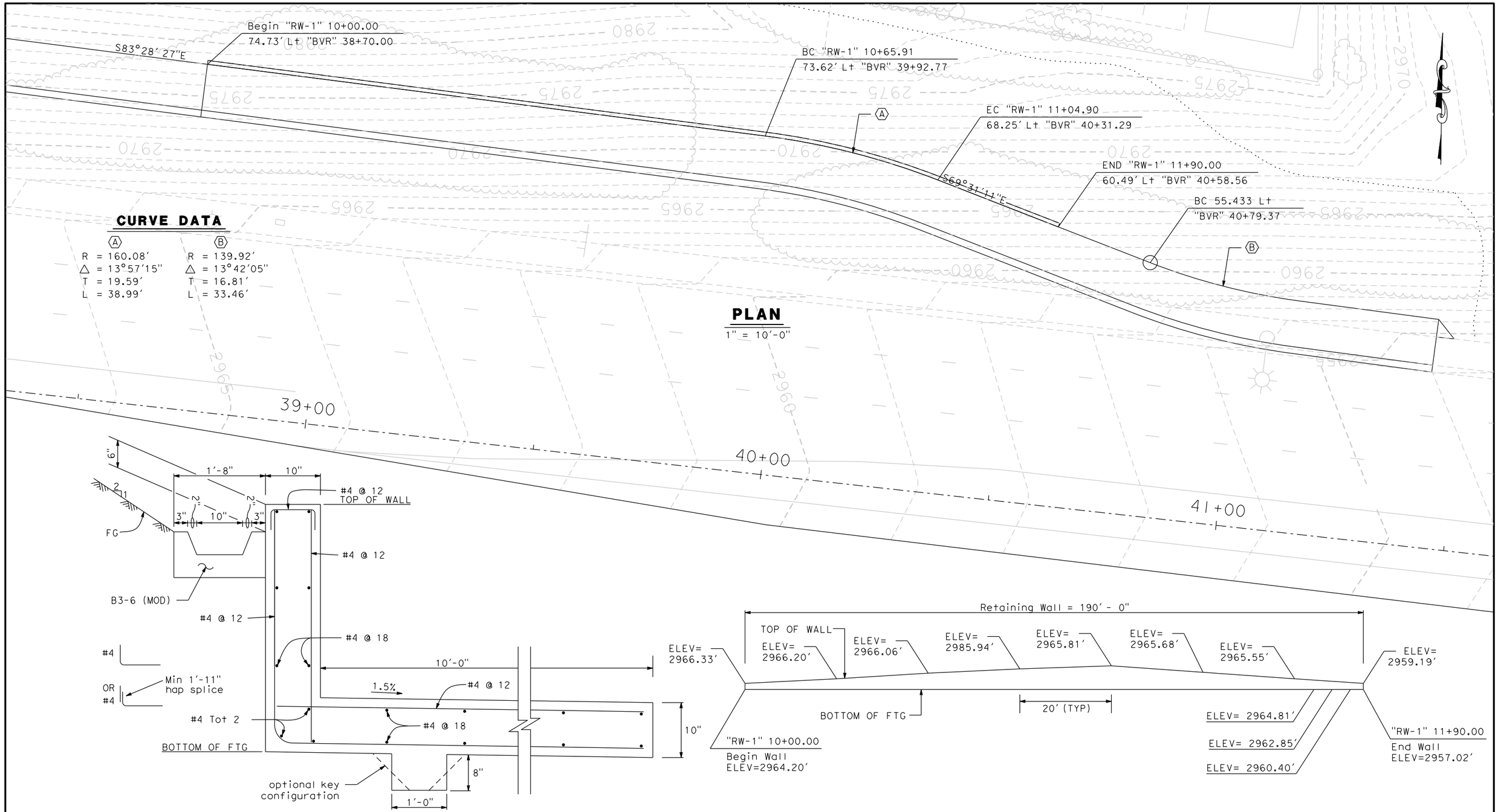

CURVE DATA

Ⓐ	Ⓑ
R = 160.08'	R = 139.92'
△ = 13°57'15"	△ = 13°42'05"
T = 19.59'	T = 16.81'
L = 38.99'	L = 33.46'

PLAN

1" = 10'-0"

TYPICAL SECTION

NTS

ELEVATION

1" = 10'-0"

NO.	REVISION	BY	DATE

APPROVED BY: CITY ENGINEER BRIAN GENGLER DATE: R.C.E. EXP. 03-31-16

DESIGNED: KRIS KOFOED

DRAWN: BRYAN FRASER

CHECKED: JUANN RAMOS

RECORD DRAWING DATE:

SCALE HORIZ: 1" = 20' VERT: N/A

PROJECT NO. XXXXX
CAD FILE: ...\5112007_gp07.dgn

CITY OF VICTORVILLE
ENGINEERING DIVISION
14343 CIVIC DRIVE,
VICTORVILLE, CA 92392
(760) 955-5158

DOKKEN ENGINEERING
110 BLUE RAVINE ROAD SUITE 200, FOLSOM CA. 916-858-0642

JUANN RAMOS, PROJECT ENGINEER DATE

REGISTERED PROFESSIONAL ENGINEER JUANN RAMOS No. 61931 Exp. 09/30/19 CIVIL STATE OF CALIFORNIA

BEAR VALLEY ROAD OH AT BNSF RAILROAD

CONSTRUCTION DETAILS

CD-7

DWG. NO.

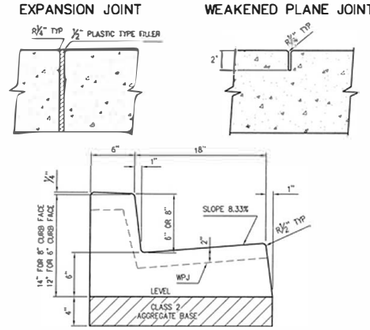

STANDARD CURB & GUTTER

NOT TO SCALE

NOTES:

1. CURB AND GUTTER SHALL BE CONSTRUCTED FROM PORTLAND CEMENT CONCRETE CONTAINING NOT LESS THAN 550 POUNDS OF TYPE II PORTLAND CEMENT PER CUBIC YARD WITH 4% AIR ENTRAINMENT AND 1" MAXIMUM AGGREGATE GRADING.
2. CONCRETE SHALL BE CURED WITH WHITE PIGMENTED CURING COMPOUND.
3. CURB AND GUTTER SHALL BE CONSTRUCTED ON MINIMUM 4" CLASS 2 AGGREGATE BASE COMPACTED TO 95% RELATIVE COMPACTION.
4. WEAKENED PLANE JOINTS SHALL BE CONSTRUCTED AT 10' INTERVALS.
5. WEAKENED PLANE JOINTS SHALL BE AT LEAST 2" DEEP.
6. EXPANSION JOINTS SHALL BE CONSTRUCTED AT ALL CURB RETURNS, DRIVEWAY APPROACHES AND AT 60' INTERVALS.
7. EXPANSION JOINTS SHALL BE 1/2" WIDE AND FILLED WITH PLASTIC TYPE FILLERS.

(NOTES CONTINUE ON SHEET 2)

APPROVED BY CITY ENGINEER		CITY OF VICTORVILLE - ENGINEERING DEPARTMENT	
DATE	SIGNATURE	STANDARD CURB & GUTTER	S-01
02/03/09		JOHN A. McGLADE, CITY ENGINEER	SHEET 1 OF 2

NOTES:

8. IF EXISTING CURB AND GUTTER IS TO BE REMOVED, IT SHALL BE SCORED AT LEAST 1" DEEP WITH A CONCRETE SAW PRIOR TO REMOVAL. IF THE SAWCUT LINE IS CLOSER THAN 2' TO AN EXPANSION JOINT OR WEAKENED PLANE JOINT THE CURB AND GUTTER SHALL BE REMOVED TO THE EXPANSION OR WEAKENED PLANE JOINT.
9. GUTTER SHALL HAVE ROUGH BROOM FINISH WITH 2" SHINER AT FLOW LINE.

APPROVED BY CITY ENGINEER		CITY OF VICTORVILLE - ENGINEERING DEPARTMENT	
DATE	SIGNATURE	STANDARD CURB & GUTTER	S-01
02/03/09		JOHN A. McGLADE, CITY ENGINEER	SHEET 2 OF 2

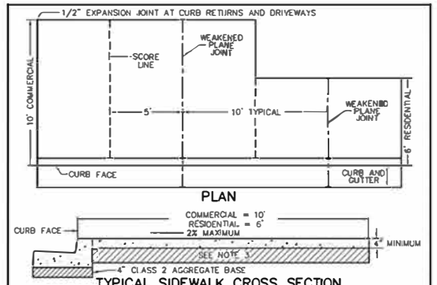

PLAN

TYPICAL SIDEWALK CROSS SECTION

NOTES:

1. SIDEWALK SHALL BE CONSTRUCTED FROM PORTLAND CEMENT CONCRETE CONTAINING NOT LESS THAN 550 POUNDS OF TYPE II PORTLAND CEMENT PER CUBIC YARD WITH 4% AIR ENTRAINMENT AND 1" MAXIMUM AGGREGATE GRADING.
2. CONCRETE SHALL BE CURED WITH WHITE PIGMENTED CURING COMPOUND.
3. BASE SHALL CONSIST OF 6" NATIVE MATERIAL (MINIMUM "R" VALUE = 70) COMPACTED TO 90% RELATIVE COMPACTION. IF NATIVE MATERIAL IS CLAY OR CALICHE OR HAS AN "R" VALUE OF LESS THAN 70, CONSTRUCT 4" CLASS II AGGREGATE BASE COMPACTED TO 90% RELATIVE COMPACTION OR AS DIRECTED BY THE CITY ENGINEER.
4. ON STRAIGHT RUN SIDEWALK, WEAKENED PLANE JOINTS SHALL BE INSTALLED ON 10' CENTERS. SIDEWALK SHALL BE SCORED ON 5' CENTERS.
5. WEAKENED PLANE JOINTS SHALL BE AT LEAST 2" DEEP.
6. EXPANSION JOINTS SHALL BE CONSTRUCTED AT ALL CURB RETURNS, DRIVEWAY APPROACHES AND AT 60' INTERVALS.
7. EXPANSION JOINTS SHALL BE 1/2" WIDE AND FILLED WITH PLASTIC TYPE FILLERS.
8. IF EXISTING SIDEWALK IS TO BE REMOVED, IT SHALL BE SCORED AT LEAST 1" DEEP WITH A CONCRETE SAW PRIOR TO REMOVAL. IF THE SAWCUT LINE IS CLOSER THAN 2' TO A SCORE LINE, WEAKENED PLANE JOINT OR EXPANSION JOINT, THE REMOVAL SHALL BE AS A PANEL TO THE NEAREST SCORE LINE OR JOINT.
9. SIDEWALK SHALL BE LIGHT BROOM FINISH.
10. SIDEWALK SHALL BE WIDENED LOCALLY TO PROVIDE A MINIMUM OF 4' CLEAR OF OBSTRUCTIONS IN THE SIDEWALK SUCH AS UTILITY POLES, STREET LIGHTS, FIRE HYDRANTS, ETC.

CITY OF VICTORVILLE - ENGINEERING DEPARTMENT				
REV.	DATE	BY	STANDARD COMMERCIAL AND RESIDENTIAL SIDEWALK	S-04
	12/21/88	C.M.O.		
1	7/25/07	STAFF	JOHN A. McGLADE, CITY ENGINEER	SHEET 1 OF 1

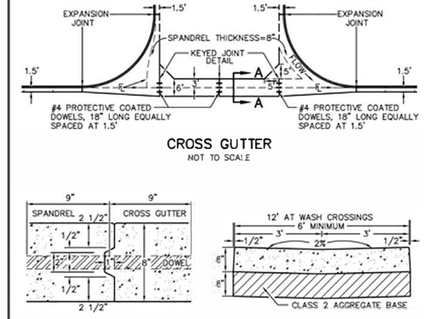

CROSS GUTTER

NOT TO SCALE

KEYED JOINT DETAIL

NOT TO SCALE

SECTION A–A

NOT TO SCALE

NOTES:

1. CROSS GUTTER SHALL BE CONSTRUCTED FROM PORTLAND CEMENT CONCRETE CONTAINING NOT LESS THAN 550 POUNDS OF TYPE II PORTLAND CEMENT PER CUBIC YARD WITH 4% AIR ENTRAINMENT AND 1" MAXIMUM AGGREGATE GRADING.
2. CONCRETE SHALL BE CURED WITH WHITE PIGMENTED CURING COMPOUND.
3. CROSS GUTTER SHALL BE CONSTRUCTED ON MINIMUM 8" CLASS 2 AGGREGATE BASE COMPACTED TO 95% RELATIVE COMPACTION.
4. CROSS GUTTER SHALL BE ROUGH BROOM FINISH.

CITY OF VICTORVILLE - ENGINEERING DEPARTMENT				
REV.	DATE	BY	STANDARD CROSS GUTTER	S-05
	7/3/74	K.K.S.		
1	6/1/07	STAFF	JOHN A. McGLADE, CITY ENGINEER	SHEET 1 OF 1

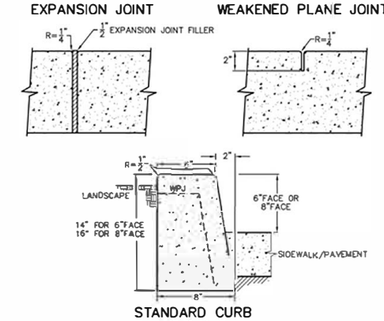

STANDARD CURB

NOT TO SCALE

NOTES:

1. CURB SHALL BE CONSTRUCTED FROM PORTLAND CEMENT CONCRETE CONTAINING NOT LESS THAN 550 POUNDS OF TYPE II PORTLAND CEMENT PER CUBIC YARD WITH 4% AIR ENTRAINMENT AND 1" MAXIMUM AGGREGATE GRADING.
2. CONCRETE SHALL BE CURED WITH WHITE PIGMENTED CURING COMPOUND.
3. WHEN USED ADJACENT TO VEHICULAR TRAFFIC, CURB SHALL BE CONSTRUCTED ON MINIMUM 4" CLASS 2 AGGREGATE BASE COMPACTED TO 95% RELATIVE COMPACTION.
4. WEAKENED PLANE JOINTS SHALL BE CONSTRUCTED AT 10' INTERVALS.
5. WEAKENED PLANE JOINTS SHALL BE AT LEAST 2" DEEP.
6. EXPANSION JOINTS SHALL BE CONSTRUCTED AT ALL CURB RETURNS, DRIVEWAY APPROACHES AND AT 60' INTERVALS.
7. EXPANSION JOINTS SHALL BE 1/2" WIDE AND FILLED WITH PLASTIC TYPE FILLERS.
8. IF EXISTING CURB IS TO BE REMOVED, IT SHALL BE SCORED AT LEAST 1" DEEP WITH A CONCRETE SAW PRIOR TO REMOVAL. IF THE SAWCUT LINE IS CLOSER THAN 2' TO A WEAKENED PLANE JOINT OR EXPANSION JOINT, THE CURB SHALL BE REMOVED TO THE WEAKENED PLANE JOINT OR EXPANSION JOINT.

CITY OF VICTORVILLE - ENGINEERING DEPARTMENT				
REV.	DATE	BY	STANDARD CURB	S-09
	7/8/74	K.K.S.		
1	6/1/07	STAFF	JOHN A. McGLADE, CITY ENGINEER	SHEET 1 OF 1

NOTES:

A. TRENCH PATH SHALL BE STRAIGHT GRADE ACROSS WIDTH, AND SHALL NOT BE CURVED AT CORNER.
B. BACKFILL MATERIAL WITHIN PIPE ZONE SHALL HAVE SAND EQUIVALENT 2.30. SELECT MATERIAL FROM EXCAVATION MAY BE USED ONLY WITH APPROVAL FROM INSPECTOR.
C. PIPE ZONE MATERIAL SHALL BE JETTED.

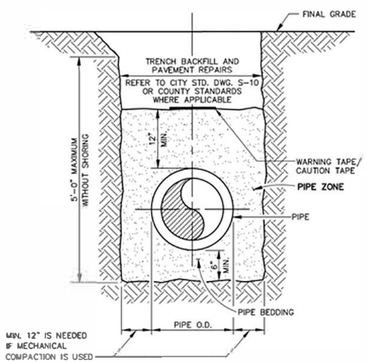

CITY OF VICTORVILLE - ENGINEERING DEPARTMENT				
REV.	DATE	BY	TYPICAL TRENCH BACKFILL SCHEMATIC	W-36
2	7/25/18	STAFF	BRIAN W. GENGLER, CITY ENGINEER	SHEET 1 OF 1
1	10/22/08	STAFF		

A.C. PAVEMENT TO BE 3 INCHES MINIMUM AND 1 INCH THICKER THAN EXISTING A.C. PAVEMENT AND SHALL BE C2-PG 64-10.

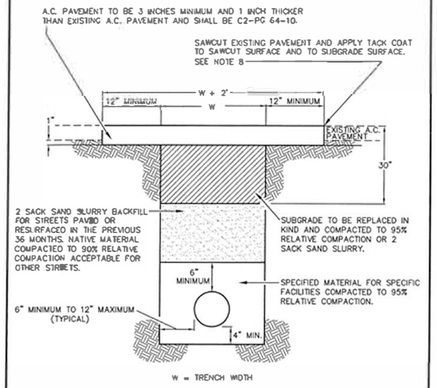

TYPICAL SECTION

NOT TO SCALE

APPROVED BY CITY ENGINEER		CITY OF VICTORVILLE - ENGINEERING DEPARTMENT	
DATE	SIGNATURE	TRENCH BACKFILL AND PAVEMENT REPAIRS	S-10
02/03/09		JOHN A. McGLADE, CITY ENGINEER	SHEET 1 OF 2

NOTES:

1. ALL EXCAVATIONS WITHIN THE CITY RIGHT-OF-WAY REQUIRE AN EXCAVATION PERMIT FROM THE ENGINEERING DEPARTMENT.
2. NOTIFY UNDERGROUND SERVICE ALERT (DigAlert) 2 WORKING DAYS PRIOR TO START OF EXCAVATION AT 1-800-227-2600.
3. NOTIFY ENGINEERING DEPARTMENT 1 WORKING DAY (24 HOURS) PRIOR TO START OF CONSTRUCTION TO ARRANGE INSPECTIONS BY CITY PUBLIC WORKS INSPECTORS.
4. ALL EXCAVATIONS SHALL BE MADE, PROTECTED AND SUPPORTED AS REQUIRED FOR SAFETY AS PRESCRIBED BY CAL OSHA.
5. TEMPORARY PAVING SHALL BE 2 SACK SAND SLURRY OR 2 INCH THICKNESS TEMPORARY ASPHALT OVER COMPACTED SUBGRADE TO TOP OF PAVEMENT TO PROVIDE A SAFE AND SMOOTH TRAVELED SURFACE. PERMANENT PAVING SHALL BE PLACED WITHIN 7 DAYS OF EXCAVATION. SEAL COAT PAVEMENT 6 INCHES BEYOND PAVEMENT REPAIR AREA.
6. ANY STREET PAVED OR RESURFACED IN THE PREVIOUS 36 MONTHS THAT IS TRENCHED FOR 300 FEET OR MORE IN A TRAVELED LANE OR EXTENDS MORE THAN 7 FEET FROM THE CURB FACE / EDGE OF PAVEMENT OR HAS MORE THAN 3 CROSS TRENCHES IN 300 FEET SHALL BE OVERLAID AS DIRECTED BY THE ENGINEER WITH A SELF PROPELLED PAVING MACHINE PER CALTRANS SECTION 39.
7. POT HOLES AND/OR NARROW TRENCH CUTS SHALL NOT BE ALLOWED IN P.C.C. IMPROVEMENTS. P.C.C. SHALL BE SAWCUT, REMOVED AND RECONSTRUCTED IN PANELS AT THE SCORE LINES, OR WEAKENED PLANE JOINTS, OR AT LEAST 10 FEET WIDE AND AS DIRECTED BY THE ENGINEER IN THE FIELD.
8. IF THE EDGE OF THE TRENCH REPAIR (W+2 FEET) IS 2 FEET OR LESS FROM THE LIP OF THE GUTTER OR 3' OR LESS FROM THE EDGE OF PAVEMENT, THE EXISTING PAVEMENT SHALL BE REMOVED AND REPLACED PER THE TYPICAL SECTION.
9. FOR NOMINAL PIPE DIAMETERS OF 12" OR LESS, TYPICAL COVER IS 36" UNLESS CIRCUMSTANCES WARRANT DIFFERENTLY OR OTHERWISE APPROVED BY THE CITY ENGINEER.

APPROVED BY CITY ENGINEER		CITY OF VICTORVILLE - ENGINEERING DEPARTMENT	
DATE	SIGNATURE	TRENCH BACKFILL AND PAVEMENT REPAIRS	S-10
02/03/09		JOHN A. McGLADE, CITY ENGINEER	SHEET 2 OF 2

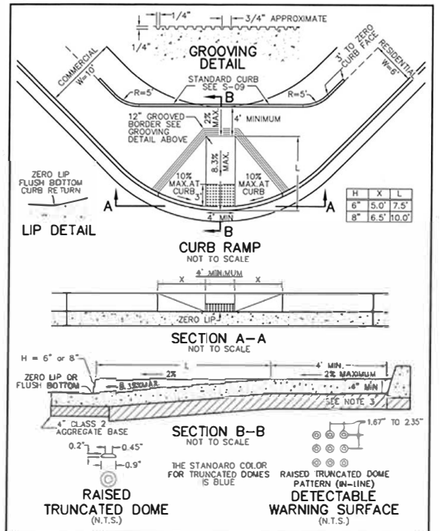

APPROVED BY CITY ENGINEER		CITY OF VICTORVILLE - ENGINEERING DEPARTMENT	
DATE	INITIALS	CURB RAMP	S-11A
02/26/09		JOHN A. MCGLADE, CITY ENGINEER	SHEET 1 OF 2

NOTES:

1. CURB RAMP SHALL BE CONSTRUCTED FROM PORTLAND CEMENT CONCRETE CONTAINING NOT LESS THAN 550 POUNDS OF TYPE II PORTLAND CEMENT PER CUBIC YARD WITH 4% AIR ENTRAINMENT AND 1" MAXIMUM AGGREGATE GRADING.
2. CONCRETE SHALL BE CURED WITH WHITE PIGMENTED CURING COMPOUND.
3. BASE SHALL CONSIST OF 6" NATIVE MATERIAL (MINIMUM "R" VALUE = 70) COMPACTED TO 90% RELATIVE COMPACTION. IF NATIVE MATERIAL IS CLAY OR CALICHE OR HAS AN "R" VALUE OF LESS THAN 70, CONSTRUCT 4" CLASS 2 AGGREGATE BASE COMPACTED TO 90% RELATIVE COMPACTION OR AS DIRECTED BY THE CITY ENGINEER.
4. BASE MATERIAL SHALL BE COMPACTED TO 90% RELATIVE COMPACTION FOR THE SIDEWALK AND 95% RELATIVE COMPACTION FOR THE CURB AND GUTTER.
5. IF A CURB RAMP IS TO BE INSTALLED IN AN EXISTING SIDEWALK, CURB AND GUTTER, THE EXISTING SIDEWALK, CURB AND GUTTER SHALL BE SAWCUT AND REMOVED TO THE NEAREST SCORELINE, WEAKENED PLANE JOINT OR EXPANSION JOINT. ALSO, ADJACENT PAVING SHALL BE SAWCUT 2' FROM THE EDGE OF THE GUTTER AND REPAVED ACCORDING TO STANDARD S-10.
6. CONSTRUCT RAMP IN THE MIDDLE OF THE CURB RETURN OR AT THE END OF THE CURB RETURN AWAY FROM THE CROSS GUTTER. RAMP MAY BE MOVED INTO THE TANGENT CURB SECTION AT INTERSECTIONS TO AVOID DISRUPTION OF HEAVY DRAINAGE FLOW.
7. IN LOCATING RAMPS IN CURB RETURN, CONSIDERATION SHOULD BE GIVEN TO THE LOCATION OF EXISTING PAINTED PEDESTRIAN CROSS WALKS AND TRAFFIC SIGNALS.
8. THE EDGE OF THE DETECTABLE WARNING SURFACE NEAREST THE STREET SHALL BE BETWEEN 6 INCHES AND 8 INCHES FROM THE GUTTER FLOWLINE.
9. IN CASES WHERE THIS STANDARD DOES NOT FIT THE SITE REQUIREMENT, THE DESIGNER MAY USE CALIFORNIA DEPARTMENT OF TRANSPORTATION STANDARD PLAN A88A (LATEST VERSION) AS APPROVED BY THE CITY ENGINEER.
10. IN CASES WHERE SURVEY MONUMENTATION MAY BE DISTURBED, SWING TIES AND NAIL AND TAG (R.P.'s) SHALL BE IDENTIFIED AND REPLACED.

APPROVED BY CITY ENGINEER		CITY OF VICTORVILLE - ENGINEERING DEPARTMENT	
DATE	INITIALS	CURB RAMP	S-11A
02/26/09		JOHN A. MCGLADE, CITY ENGINEER	SHEET 2 OF 2

NO.	REVISION	BY	DATE

APPROVED BY: CITY ENGINEER BRIAN GENGLER DATE: R.C.E. EXP. 03-31-15

DESIGNED: KRIS KOFOED

DRAWN: BRYAN FRASER

CHECKED: JUANN RAMOS

RECORD DRAWING DATE:

SCALE HORIZ: N/A VERT: N/A

PROJECT NO. XXXXX
CAD FILE: ...\511\2007_0008.dgn

CITY OF VICTORVILLE
ENGINEERING DIVISION
14343 CIVIC DRIVE,
VICTORVILLE, CA 92392
(760) 955-5158

DOKKEN ENGINEERING
110 BLUE RAVINE ROAD SUITE 200, FOLSOM CA. 916-858-0642

JUANN RAMOS, PROJECT ENGINEER DATE

REGISTERED PROFESSIONAL ENGINEER JUANN RAMOS No. 61931 Exp. 09/30/19 CIVIL STATE OF CALIFORNIA

BEAR VALLEY ROAD OH AT BNSF RAILROAD

CONSTRUCTION DETAILS

CD-8

DWG. NO.

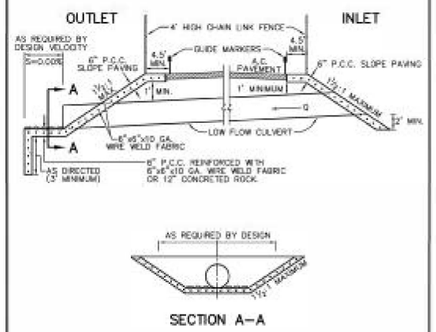

NOTES:

1. ALL CONCRETE SHALL CONTAIN NOT LESS THAN 550 POUNDS OF CEMENTITIOUS MATERIAL PER CUBIC YARD WITH 4% AIR ENTRAINMENT.
2. DOWNSTREAM CUTOFF WALL SHALL EXTEND DOWN 3' MINIMUM BELOW WASH BOTTOM OR AS REQUIRED BY DESIGN. UPSTREAM WALL SHALL EXTEND DOWN 2' MINIMUM BELOW WASH BOTTOM OR AS REQUIRED BY DESIGN.
3. THIS STANDARD IS TO APPLY TO THE INITIAL STAGE OF STAGED CONSTRUCTION OF AN ARTERIAL STREET TO BE DEVELOPED WITH TWO LANES AND PAVED SHOULDERS ACROSS THE WASH AREA SUBJECT TO FLOW. UPSTREAM AND DOWNSTREAM CHANNEL BOTTOM AND BANK PROTECTION TREATMENT TYPICAL FOR THIS APPLICATION AND THE APPLICATION DEPICTED ON STANDARD DRAWING NUMBER D-01. ALTERNATE METHODS OF CHANNEL BOTTOM AND BANK PROTECTION MAY BE APPROVED BASED ON DESIGN CONDITIONS. OTHERWISE, THIS STANDARD AND STANDARD D-01 SHALL APPLY.

CITY OF VICTORVILLE - ENGINEERING DEPARTMENT				
REV.	DATE	BY	STANDARD CUTOFF WALL FOR DRAINAGE CHANNEL	S-20
	2/3/06	K.S.S.		
1	8/1/07	STAFF	JOHN A. MCGLADE, CITY ENGINEER	SHEET 1 OF 1

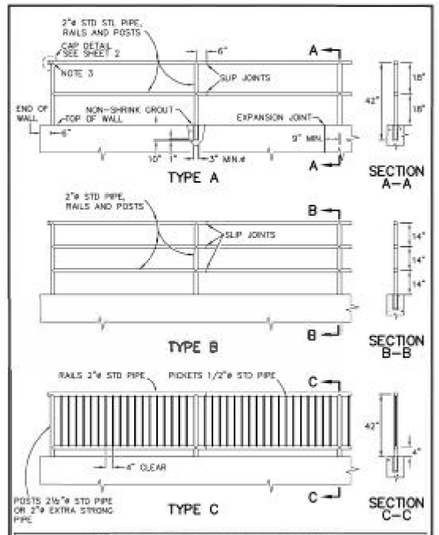

CITY OF VICTORVILLE - ENGINEERING DEPARTMENT				
REV.	DATE	BY	METAL HAND RAILINGS	S-22
	8/1/75	STAFF		
1	8/1/07	STAFF	JOHN A. MCGLADE, CITY ENGINEER	SHEET 2 OF 2

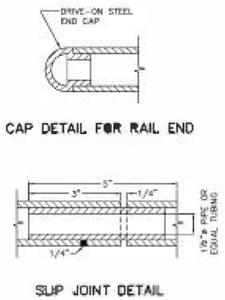

NOTES:

1. RAILS, POSTS AND PICKETS SHALL BE GALVANIZED STEEL PIPE.
2. MAXIMUM SPACING OF POSTS SHALL BE 8' ON STRAIGHT ALIGNMENTS AND 6' ON CURVED ALIGNMENTS WITH LESS THAN 30' RADIUS. MAKE SPACING UNIFORM BETWEEN CHANGES IN ALIGNMENT.
3. WELDS SHALL BE SLOT OR FILLET WELDS EQUAL TO THICKNESS OF PIPE. WELD ALL JOINTS ALL AROUND.

CITY OF VICTORVILLE - ENGINEERING DEPARTMENT				
REV.	DATE	BY	METAL HAND RAILINGS	S-22
	8/1/75	STAFF		
1	8/1/07	STAFF	JOHN A. MCGLADE, CITY ENGINEER	SHEET 2 OF 2

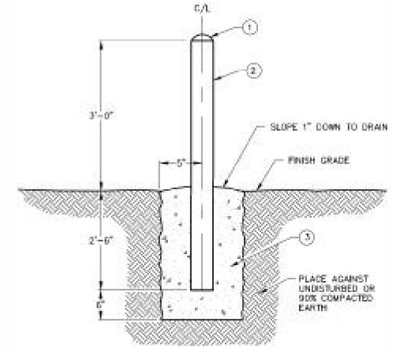

ITEM	DESCRIPTION	APPROVED MATERIAL LIST NUMBER
1	FILL PIPE WITH CONCRETE & ROUND OVER TO FORM CAP	
2	4"ø x 5/8" SCH. 40 GALVANIZED STEEL PIPE – PAINT YELLOW △1	
3	CONCRETE FOOTING, 10" DIAMETER	

CITY OF VICTORVILLE - ENGINEERING DEPARTMENT				
REV.	DATE	BY	GUARD POST	W-42
2	03/1816	STAFF		
1	8/2006	STAFF	BRIAN W. GENGLER, CITY ENGINEER	SHEET 1 OF 1

NO.	REVISION	BY	DATE

APPROVED BY: CITY ENGINEER _____ BRIAN GENGLER DATE: _____ R.C.E. _____ EXP. 03-31-16

DESIGNED: KRIS KOFOED

DRAWN: BRYAN FRASER

CHECKED: JUANN RAMOS

RECORD DRAWING DATE:

SCALE HORIZ: N/A VERT: N/A

PROJECT NO. XXXXX
CAD FILE: ...\511\2007_gd09.dgn

CITY OF VICTORVILLE
ENGINEERING DIVISION
14343 CIVIC DRIVE,
VICTORVILLE, CA 92392
(760) 955-5158

DOKKEN ENGINEERING
110 BLUE RAVINE ROAD SUITE 200, FOLSOM CA. 916-858-0642

JUANN RAMOS, PROJECT ENGINEER _____ DATE _____

REGISTERED PROFESSIONAL ENGINEER JUANN RAMOS No. 61931 Exp. 09/30/19 CIVIL STATE OF CALIFORNIA

BEAR VALLEY ROAD OH AT BNSF RAILROAD

CONSTRUCTION DETAILS

CD-9

DWG. NO.

LEGEND:

- ELECTRICAL UNDERGROUND
- ELECTRICAL OVERHEAD
- FIBER OPTIC LINE
- GAS
- JOINT OVERHEAD LINES
- STORM DRAIN
- SEWER
- TELEPHONE UNDERGROUND
- TELEPHONE OVERHEAD
- WATER
- POTHOLE LOCATION
- POTHOLE NUMBER

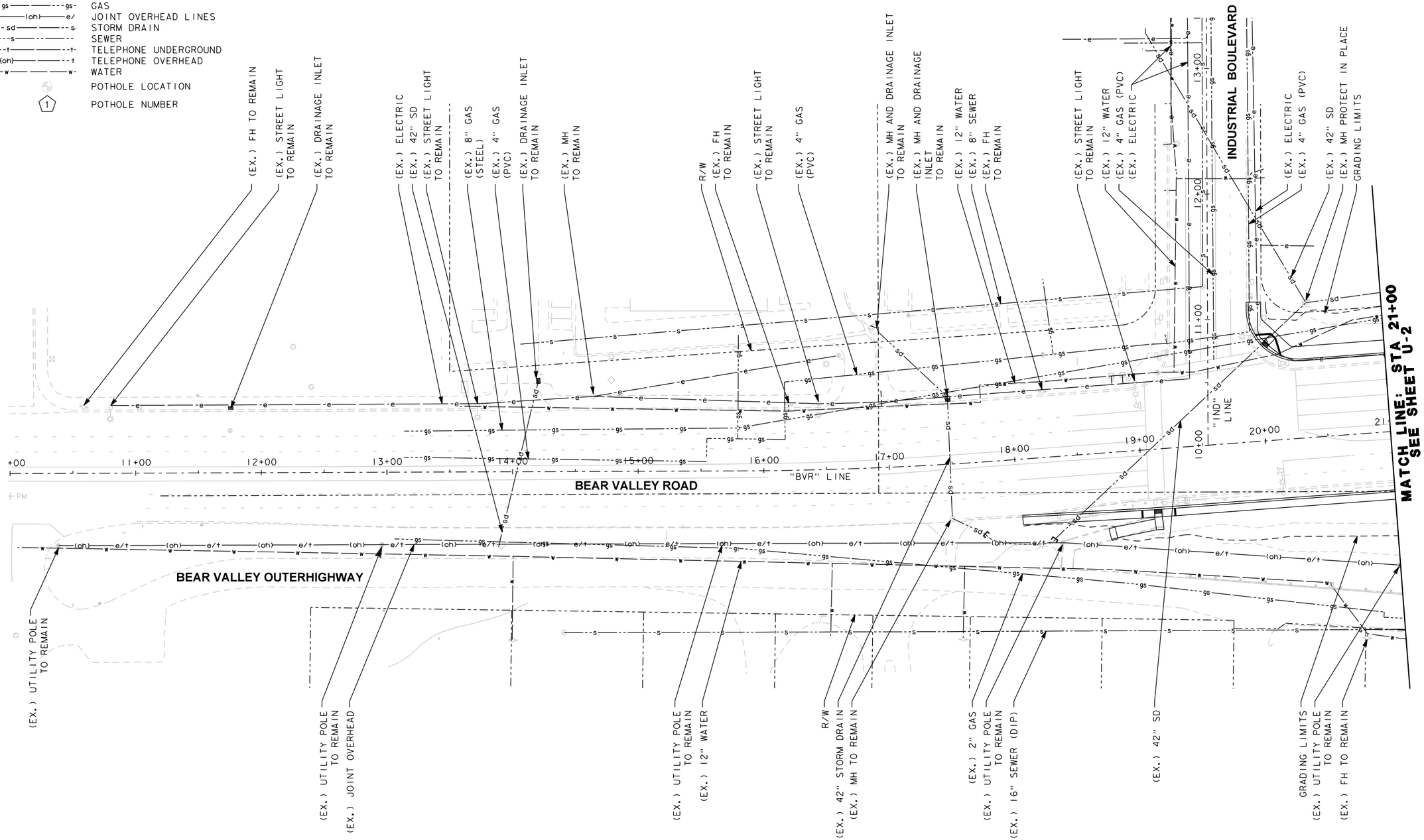

NOTES:

1. THIS PLAN IS ACCURATE FOR UTILITY INFORMATION ONLY.

THIS PLAN IS ACCURATE FOR UTILITY WORK ONLY.

NO.	REVISION	BY	DATE

APPROVED BY: CITY ENGINEER — BRIAN GENGLER — DATE: — R.C.E. EXP. 03-31-16

DESIGNED: KRIS KOFOED

DRAWN: BRYAN FRASER

CHECKED: JUANN RAMOS

RECORD DRAWING DATE:

SCALE — HORIZ: N/A — VERT: N/A

PROJECT NO. XXXXX
CAD FILE: ...\51112007_ka01.dgn

CITY OF VICTORVILLE
ENGINEERING DIVISION
14343 CIVIC DRIVE,
VICTORVILLE, CA 92392
(760) 955-5158

DOKKEN ENGINEERING
110 BLUE RAVINE ROAD SUITE 200, FOLSOM CA. 916-858-0642

JUANN RAMOS, PROJECT ENGINEER — DATE

REGISTERED PROFESSIONAL ENGINEER — JUANN RAMOS — No. 61931 — Exp. 09/30/19 — CIVIL — STATE OF CALIFORNIA

BEAR VALLEY ROAD OH AT BNSF RAILROAD

UTILITY PLAN

21 OF 81

U-1

DWG. NO.

POTHOLE LOCATION INFORMATION

NO. ⬠	LOCATION	DEPTH TO TOP OF PIPE	METHOD	SIZE & TYPE
1	91.08' LT 'BEAR VALLEY ROAD' 21+07	9.08'	POTHOLING	8" GAS
2	64.05' LT 'BEAR VALLEY ROAD' 21+08	2.82'	POTHOLING	4" ELECTRIC, 2" UNKNOWN
3	94.01' LT 'BEAR VALLEY ROAD' 21+06	N/A (DRY HOLE)	POTHOLING	N/A (DRY HOLE)
4	108.89' LT 'BEAR VALLEY ROAD' 30+46	5.22'	POTHOLING	12" WATER
5	124.52' LT 'BEAR VALLEY ROAD' 30+42	5.60'	POTHOLING	8" GAS

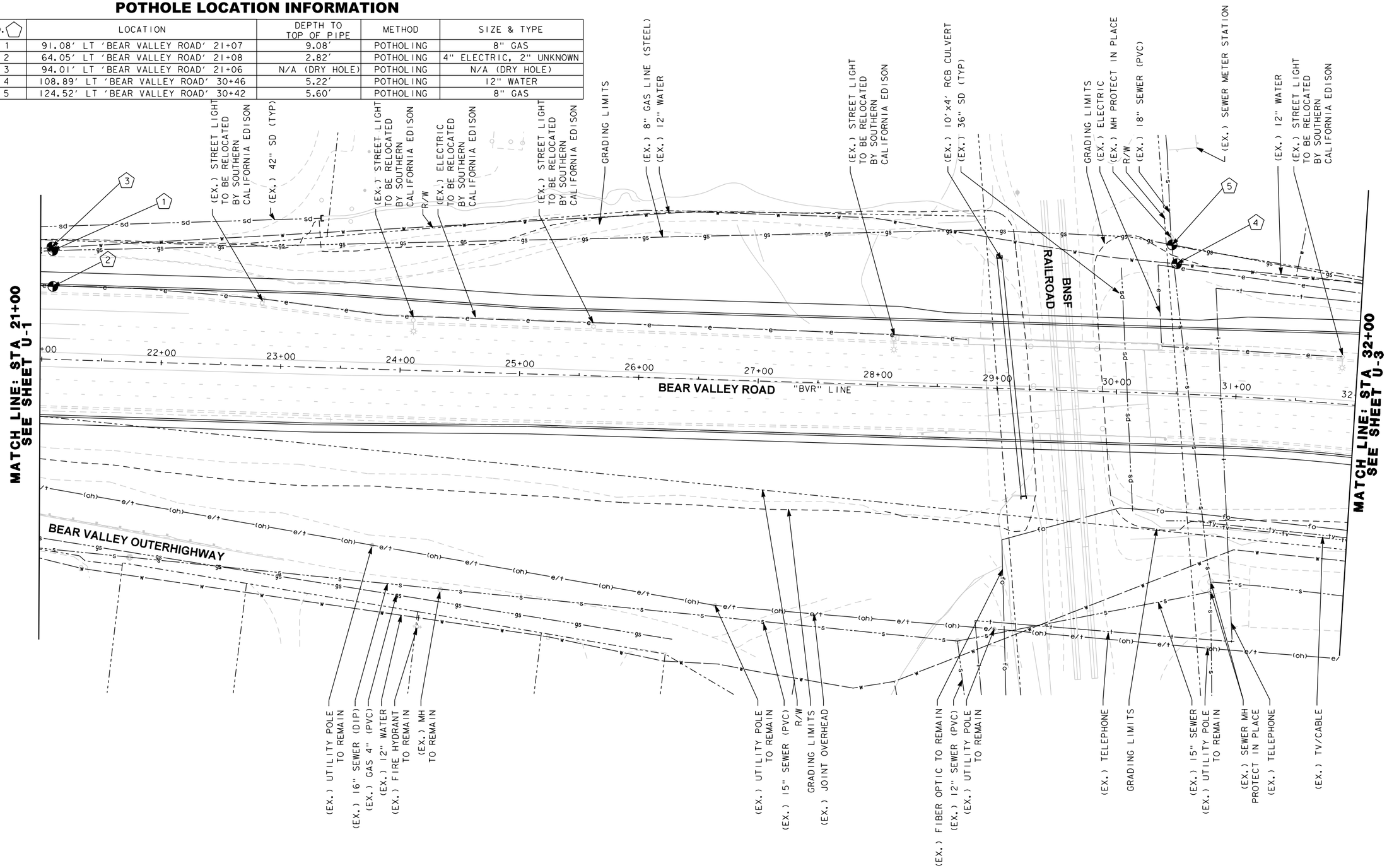

NOTES:

1. THIS PLAN IS ACCURATE FOR UTILITY WORK ONLY.

NO.	REVISION	BY	DATE

APPROVED BY: CITY ENGINEER BRIAN GENGLER DATE: R.C.E. EXP. 03-31-16

DESIGNED: KRIS KOFOED
DRAWN: BRYAN FRASER
CHECKED: JUANN RAMOS

RECORD DRAWING DATE:
SCALE HORIZ: N/A VERT: N/A
PROJECT NO. XXXXX
CAD FILE: ...\511\2007_ka02.dgn

CITY OF VICTORVILLE
ENGINEERING DIVISION
14343 CIVIC DRIVE,
VICTORVILLE, CA 92392
(760) 955-5158

DOKKEN ENGINEERING
110 BLUE RAVINE ROAD SUITE 200, FOLSOM CA. 916-858-0642

JUANN RAMOS, PROJECT ENGINEER DATE

REGISTERED PROFESSIONAL ENGINEER JUANN RAMOS No. 61931 Exp. 09/30/19 CIVIL STATE OF CALIFORNIA

BEAR VALLEY ROAD OH AT BNSF RAILROAD

UTILITY PLAN

22 OF 81

U-2

DWG. NO.

POTHOLE LOCATION INFORMATION

NO. ⬠	LOCATION	DEPTH TO TOP OF PIPE	METHOD	SIZE & TYPE
6	95.07' RT 'BEAR VALLEY ROAD' 35+16	7.70'	POTHOLING	8" COMM
7	100.20' RT 'BEAR VALLEY ROAD' 35+22	4.66'	POTHOLING	(2) 2" COMM
8	88.45' RT 'BEAR VALLEY ROAD' 35+65	3.56'	POTHOLING	4" GAS
9	47.99' LT 'BEAR VALLEY ROAD' 37+74	4.12'	POTHOLING	8" GAS

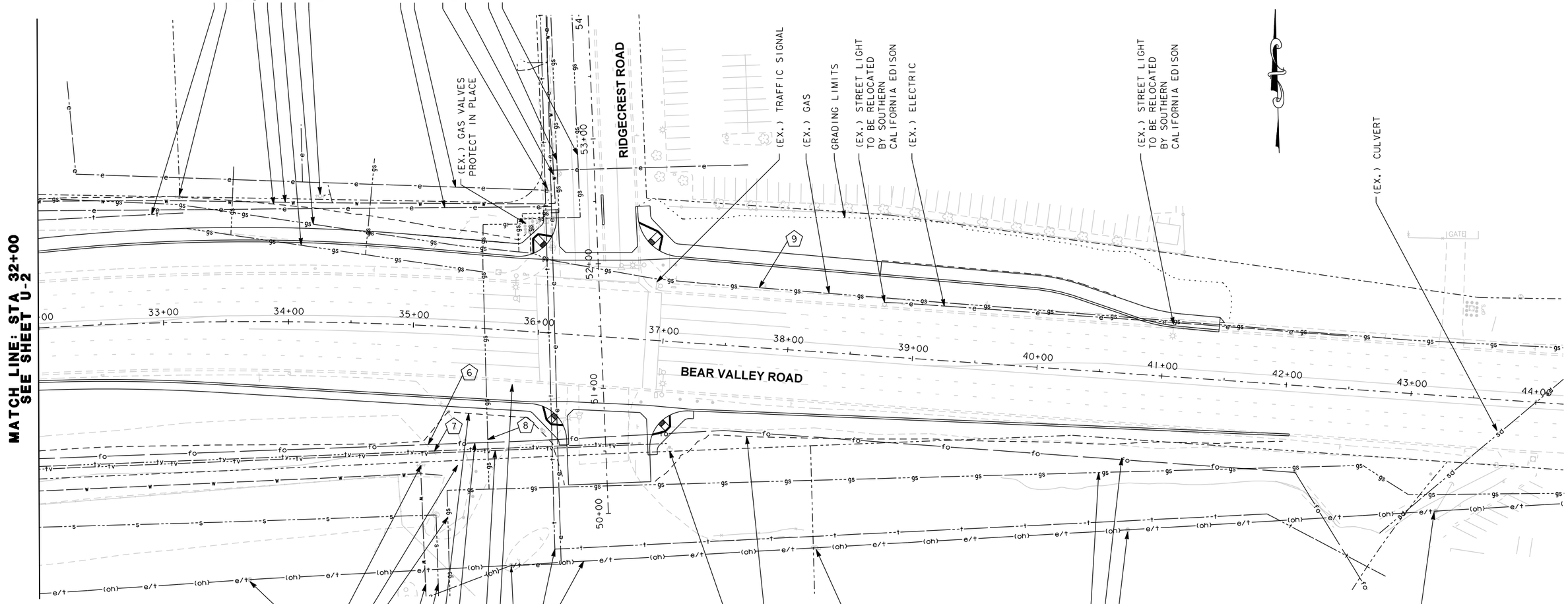

NOTES:

1. THIS PLAN IS ACCURATE FOR UTILITY WORK ONLY.

NO.	REVISION	BY	DATE

APPROVED BY: CITY ENGINEER — BRIAN GENGLER — DATE: — R.C.E. EXP. 03-31-16

DESIGNED: KRIS KOFOED
DRAWN: BRYAN FRASER
CHECKED: JUANN RAMOS

RECORD DRAWING DATE:
SCALE — HORIZ: N/A — VERT: N/A
PROJECT NO. XXXXX
CAD FILE: ...\5112007_ko03.dgn

CITY OF VICTORVILLE
ENGINEERING DIVISION
14343 CIVIC DRIVE,
VICTORVILLE, CA 92392
(760) 955-5158

DOKKEN ENGINEERING
110 BLUE RAVINE ROAD SUITE 200, FOLSOM CA. 916-858-0642

JUANN RAMOS, PROJECT ENGINEER — DATE

REGISTERED PROFESSIONAL ENGINEER — JUANN RAMOS — No. 61931 — Exp. 09/30/19 — CIVIL — STATE OF CALIFORNIA

BEAR VALLEY ROAD OH AT BNSF RAILROAD

UTILITY PLAN

U-3

DWG. NO.

LEGEND:

- EDGE OF PAVEMENT
- R/W LINE
- CENTER LINE OF B.N.S.F. RAILROAD TRACKS
- TEMPORARY CONSTRUCTION EASEMENT (TCE)
- TEMPORARY FENCE
- TRUCK ACCESS ROUTE

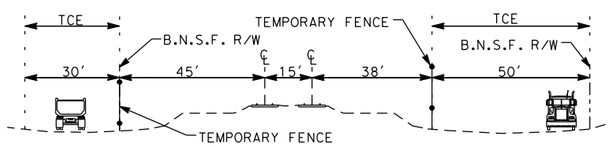

SECTION A-A

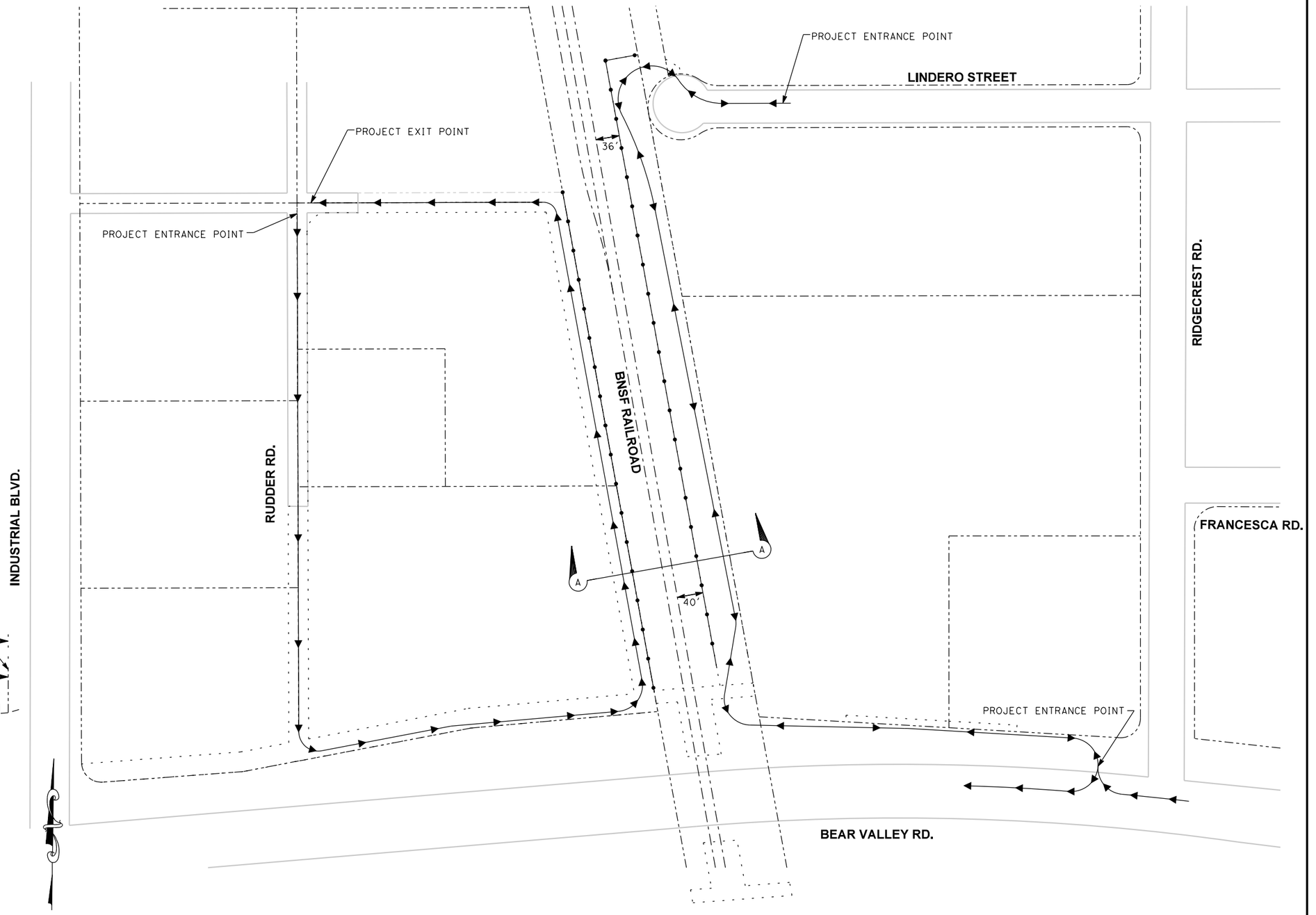

NO.	REVISION	BY	DATE

APPROVED BY: CITY ENGINEER BRIAN GENGLER DATE: R.C.E. EXP. 03-31-16

DESIGNED: KRIS KOFOED

DRAWN: BRYAN FRASER

CHECKED: JUANN RAMOS

RECORD DRAWING DATE:

SCALE HORIZ: N/A VERT: N/A

PROJECT NO. XXXXX
CAD FILE: ...\511\2007_kz02.dgn

CITY OF VICTORVILLE
ENGINEERING DIVISION
14343 CIVIC DRIVE,
VICTORVILLE, CA 92392
(760) 955-5158

DOKKEN ENGINEERING
110 BLUE RAVINE ROAD SUITE 200, FOLSOM CA. 916-858-0642

JUANN RAMOS, PROJECT ENGINEER DATE

REGISTERED PROFESSIONAL ENGINEER JUANN RAMOS No. 61931 Exp. 09/30/19 CIVIL STATE OF CALIFORNIA

BEAR VALLEY ROAD OH AT BNSF RAILROAD

CONSTRUCTION ACCESS PLAN

CA-1

DWG. NO.

LEGEND:

- PROJECT AREA
- (C1-01) CONSTRUCTION AREA SIGN NUMBER
- CONSTRUCTION AREA SIGN LOCATION-SINGLE POST

NOTES:

1. ALL SIGNS AND SIGN PLACEMENTS SHALL CONFORM TO THE LATEST EDITION OF CALIFORNIA MANUAL ON UNIFORM TRAFFIC CONTROL DEVICES.

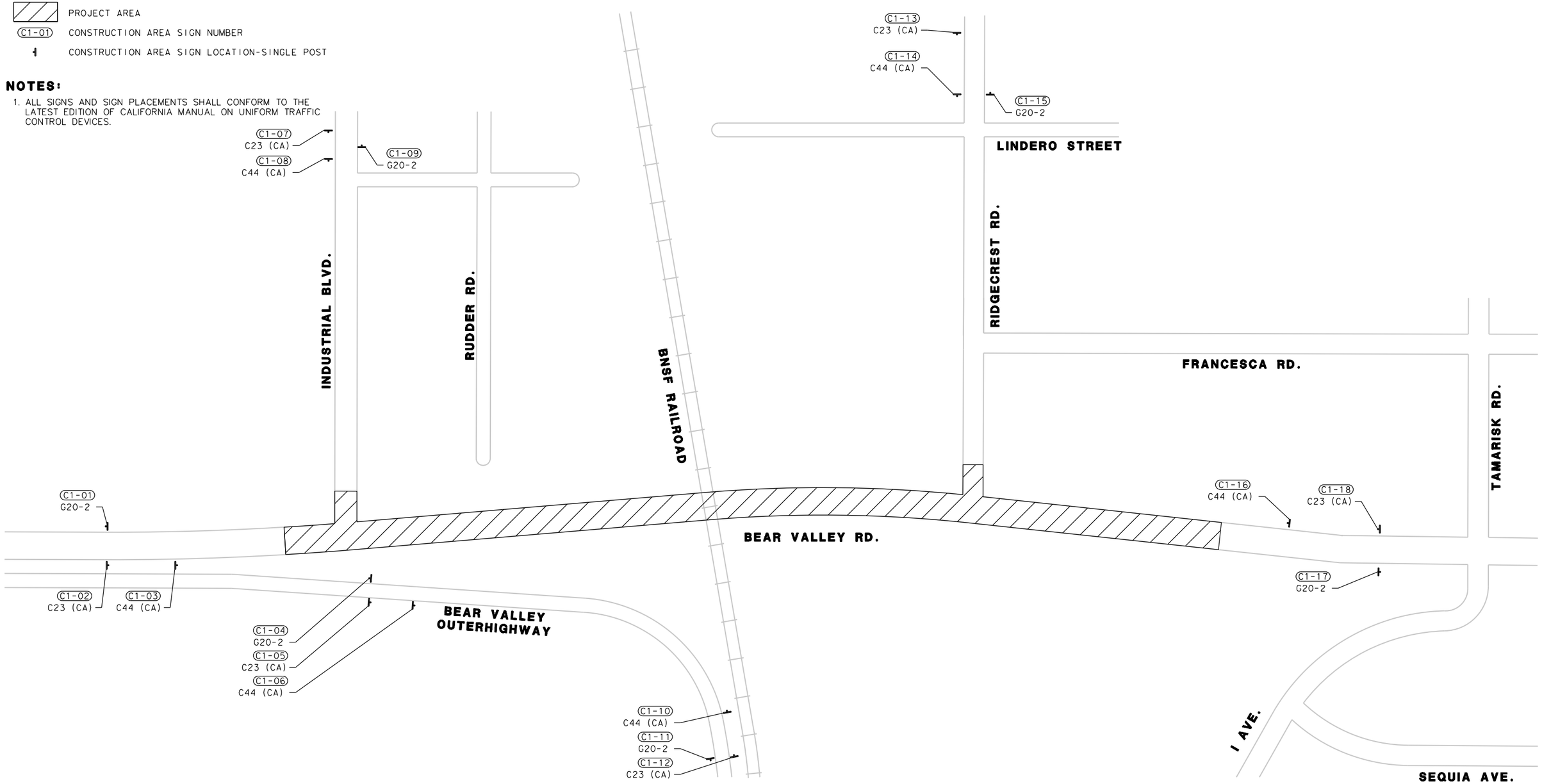

NO.	REVISION	BY	DATE

APPROVED BY: CITY ENGINEER _____ BRIAN GENGLER DATE: _____ R.C.E. EXP. 03-31-16

DESIGNED: KRIS KOFOED

DRAWN: BRYAN FRASER

CHECKED: JUANN RAMOS

RECORD DRAWING DATE:

SCALE HORIZ: N/A VERT: N/A

PROJECT NO. XXXXX
CAD FILE: ...\S11\2007_1a01.dgn

CITY OF VICTORVILLE
ENGINEERING DIVISION
14343 CIVIC DRIVE,
VICTORVILLE, CA 92392
(760) 955-5158

DOKKEN ENGINEERING
110 BLUE RAVINE ROAD SUITE 200, FOLSOM CA. 916-858-0642

JUANN RAMOS, PROJECT ENGINEER _____ DATE

REGISTERED PROFESSIONAL ENGINEER JUANN RAMOS No. 61931 Exp. 09/30/19 CIVIL STATE OF CALIFORNIA

BEAR VALLEY ROAD OH AT BNSF RAILROAD

CONSTRUCTION AREA SIGNS

CS-1

DWG. NO.

LEGEND:

- CONSTRUCT THIS STAGE
- DIRECTION OF TRAFFIC FLOW
- PORTABLE DELINEATOR
- TEMPORARY RAILING (TYPE K)
- TEMPORARY CRASH CUSHION (TYPE ABSORB 350)

STAGING CONSTRUCTION NOTES:

1. ALL TEMPORARY STRIPING TO BE PLACED WITHOUT MARKERS
2. CONFORM TO EXISTING STRIPING
3. REPAINT MARKING AS NECESSARY

(1) DETAIL 12
(2) DETAIL 22
(3) DETAIL 27B
(4) DETAIL 29
(7) DETAIL 38A
(12) TYPE III (L) PAVEMENT ARROW

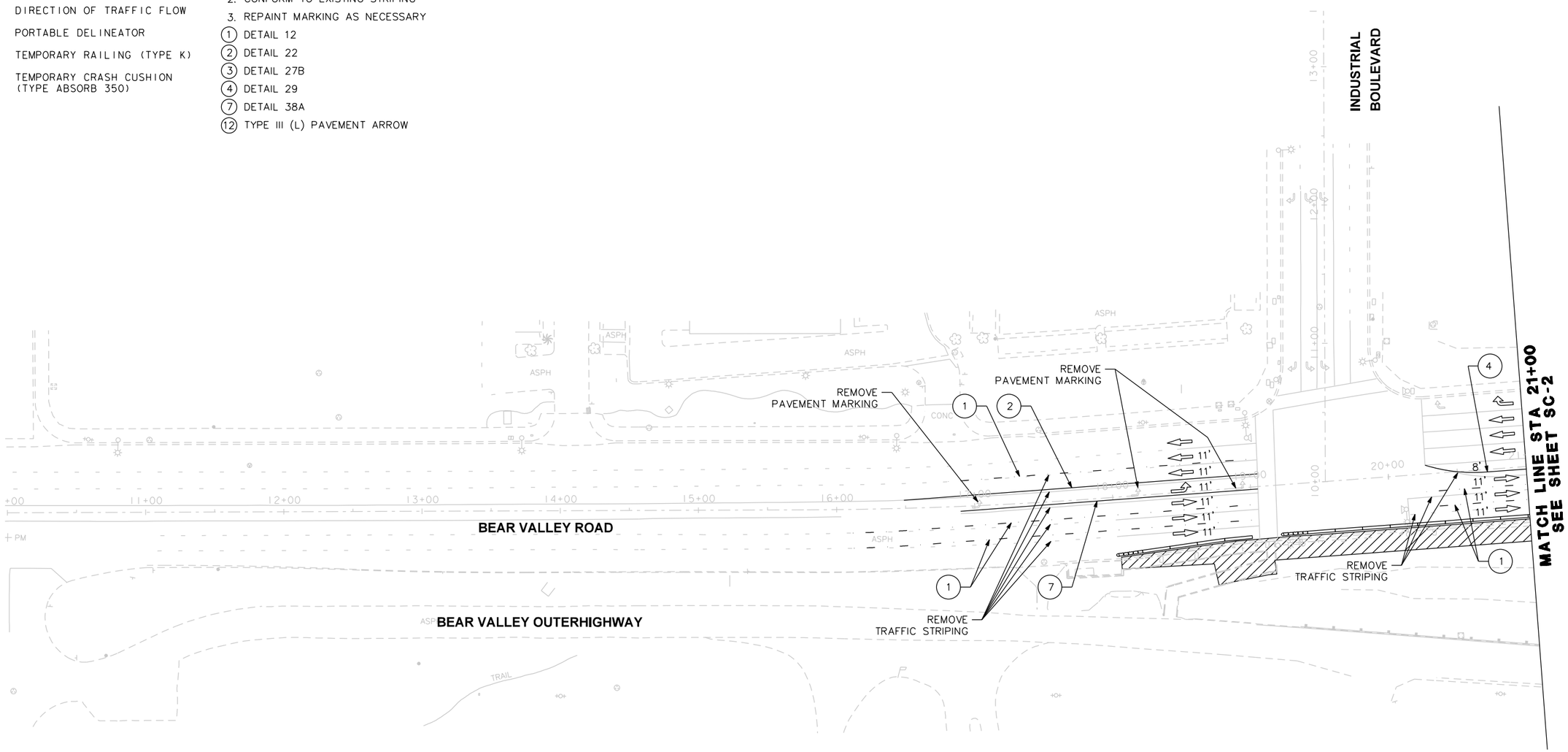

NOTES:

1. CONTRACTOR TO MAINTAIN PEDESTRIAN ACCESS DURING CONSTRUCTION.
2. ALL TEMPORARY STRIPING AND PAVEMENT MARKING SHALL BE PAINT.
3. CONTRACTOR SHALL MAINTAIN DRAINAGE AT ALL TIMES.
4. WHERE REQUIRED, REPLACE EXISTING STRIPING AND MARKINGS IN KIND.

NO.	REVISION	BY	DATE

APPROVED BY: CITY ENGINEER BRIAN GENGLER DATE: R.C.E. EXP. 03-31-16

DESIGNED: KRIS KOFOED
DRAWN: BRYAN FRASER
CHECKED: JUANN RAMOS

RECORD DRAWING DATE:
SCALE HORIZ: 1" = 40' VERT: N/A
PROJECT NO. XXXXX
CAD FILE: ...\SIG\2007_ma01.dgn

CITY OF VICTORVILLE
ENGINEERING DIVISION
14343 CIVIC DRIVE,
VICTORVILLE, CA 92392
(760) 955-5158

DOKKEN ENGINEERING
110 BLUE RAVINE ROAD SUITE 200, FOLSOM CA. 916-858-0642

JUANN RAMOS, PROJECT ENGINEER DATE

REGISTERED PROFESSIONAL ENGINEER JUANN RAMOS No. 61931 Exp. 09/30/19 CIVIL STATE OF CALIFORNIA

BEAR VALLEY ROAD OH AT BNSF RAILROAD

STAGE CONSTRUCTION
STAGE 1

SC-1

DWG. NO.

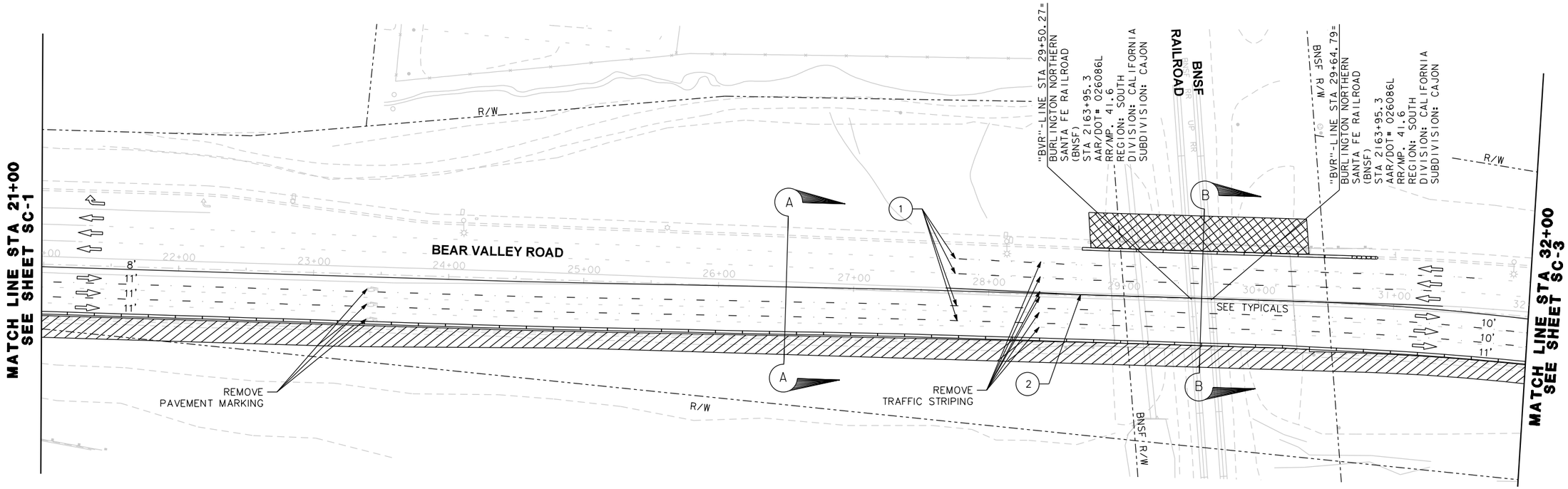

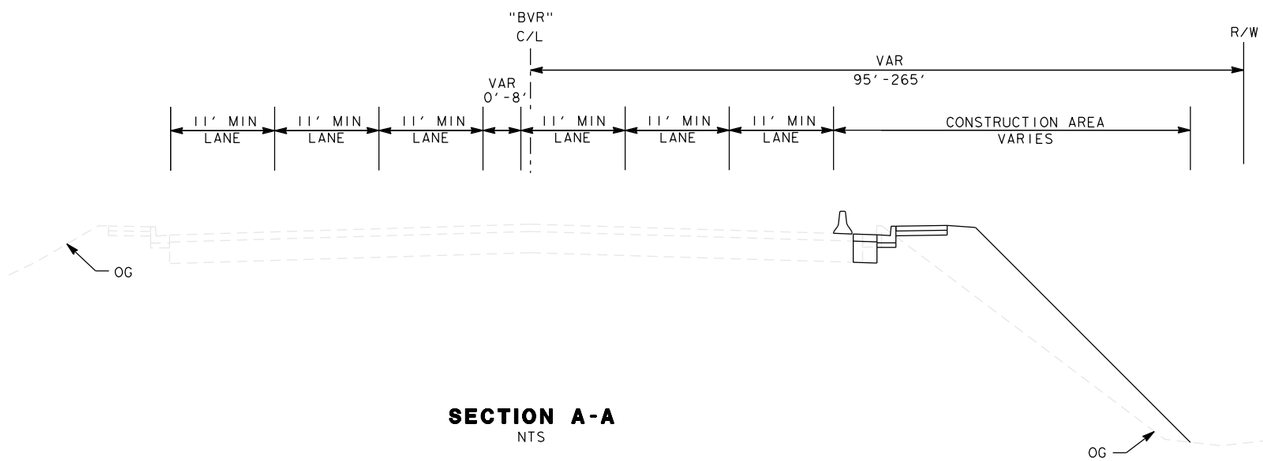

SECTION A-A
NTS

LEGEND:

STAGE 1A

STAGE 1B

NOTES:

1. FOR ALL OTHER STAGE CONSTRUCTION NOTES & LEGEND SEE SHEET SC-1.

NO.	REVISION	BY	DATE

APPROVED BY: CITY ENGINEER _____ BRIAN GENGLER DATE: _____ R.C.E. EXP. 03-31-16

DESIGNED: KRIS KOFOED

DRAWN: BRYAN FRASER

CHECKED: JUANN RAMOS

RECORD DRAWING DATE:

SCALE HORIZ: 1" = 40' VERT: N/A

PROJECT NO. XXXXX
CAD FILE: ...\S11\2007_ma02.dgn

CITY OF VICTORVILLE
ENGINEERING DIVISION
14343 CIVIC DRIVE,
VICTORVILLE, CA 92392
(760) 955-5158

DOKKEN ENGINEERING
110 BLUE RAVINE ROAD SUITE 200, FOLSOM CA. 916-858-0642

JUANN RAMOS, PROJECT ENGINEER _____ DATE

REGISTERED PROFESSIONAL ENGINEER JUANN RAMOS No. 61931 Exp. 09/30/19 CIVIL STATE OF CALIFORNIA

BEAR VALLEY ROAD OH AT BNSF RAILROAD

STAGE CONSTRUCTION
STAGE 1

SC-2

DWG. NO.

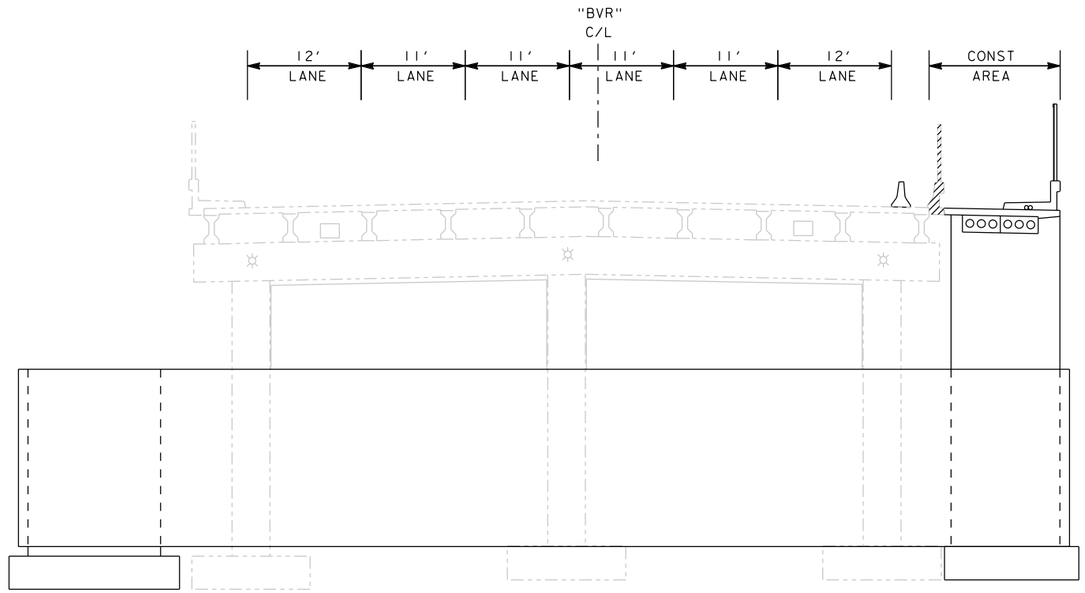

SECTION B-B (STAGE 1A)
NTS

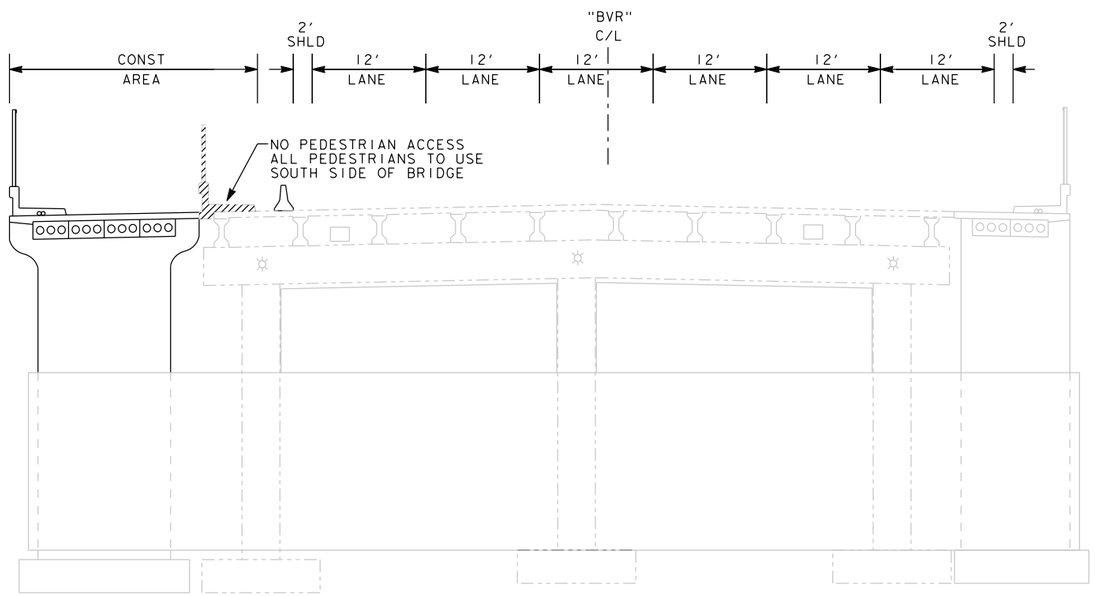

SECTION B-B (STAGE 1B)
NTS

NOTES:

1. FOR BRIDGE DETAILS SEE BRIDGE PLANS.

NO.	REVISION	BY	DATE

APPROVED BY: CITY ENGINEER BRIAN GENGLER DATE: R.C.E. EXP. 03-31-16

DESIGNED: KRIS KOFOED
DRAWN: BRYAN FRASER
CHECKED: JUANN RAMOS

RECORD DRAWING DATE:
SCALE HORIZ: N/A VERT: N/A
PROJECT NO. XXXXX
CAD FILE: ...\S11\2007_ma03.dgn

CITY OF VICTORVILLE
ENGINEERING DIVISION
14343 CIVIC DRIVE,
VICTORVILLE, CA 92392
(760) 955-5158

DOKKEN ENGINEERING
110 BLUE RAVINE ROAD SUITE 200, FOLSOM CA. 916-858-0642

JUANN RAMOS, PROJECT ENGINEER DATE

REGISTERED PROFESSIONAL ENGINEER JUANN RAMOS No. 61931 Exp. 09/30/19 CIVIL STATE OF CALIFORNIA

BEAR VALLEY ROAD OH AT BNSF RAILROAD

STAGE CONSTRUCTION
STAGE 1

SC-3

DWG. NO.

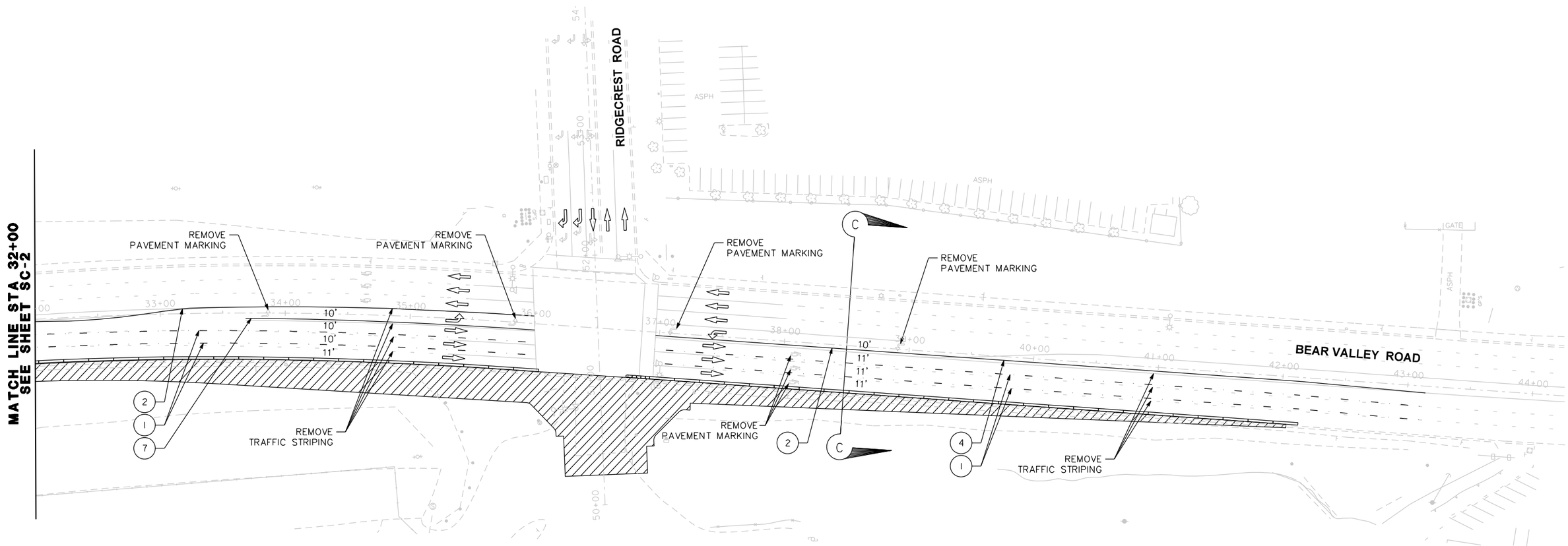

NOTES:

1. SEE SHEET SC-1 FOR NOTES AND LEGEND.

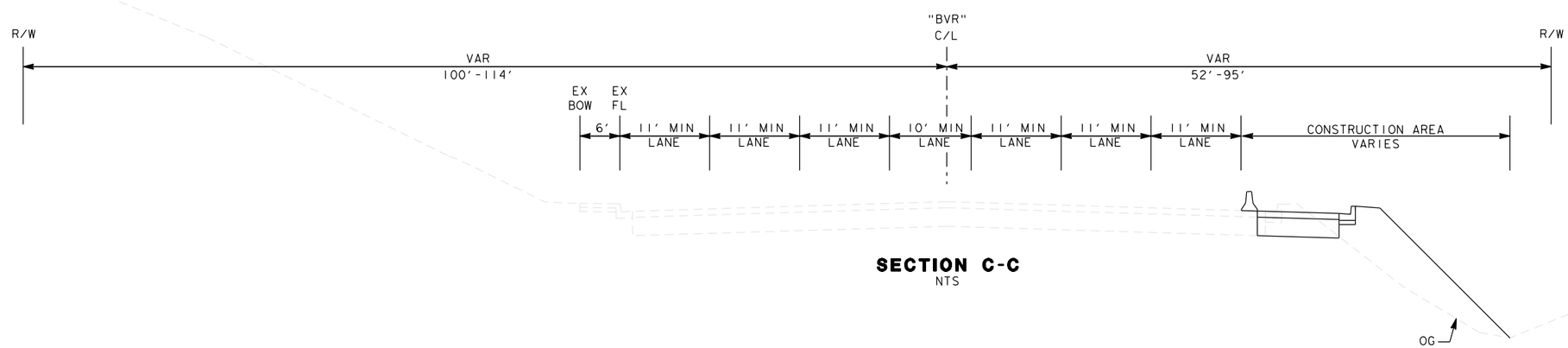

SECTION C-C
NTS

NO.	REVISION	BY	DATE

APPROVED BY: CITY ENGINEER BRIAN GENGLER DATE: R.C.E. EXP. 03-31-16

DESIGNED: KRIS KOFOED

DRAWN: BRYAN FRASER

CHECKED: JUANN RAMOS

RECORD DRAWING DATE:

SCALE HORIZ: 1" = 40' VERT: N/A

PROJECT NO. XXXXX
CAD FILE: ...\511\2007_ma04.dgn

CITY OF VICTORVILLE
ENGINEERING DIVISION
14343 CIVIC DRIVE,
VICTORVILLE, CA 92392
(760) 955-5158

DOKKEN ENGINEERING
110 BLUE RAVINE ROAD SUITE 200, FOLSOM CA. 916-858-0642

JUANN RAMOS, PROJECT ENGINEER DATE

REGISTERED PROFESSIONAL ENGINEER JUANN RAMOS No. 61931 Exp. 09/30/19 CIVIL STATE OF CALIFORNIA

BEAR VALLEY ROAD OH AT BNSF RAILROAD

STAGE CONSTRUCTION
STAGE 1

SC-4

DWG. NO.

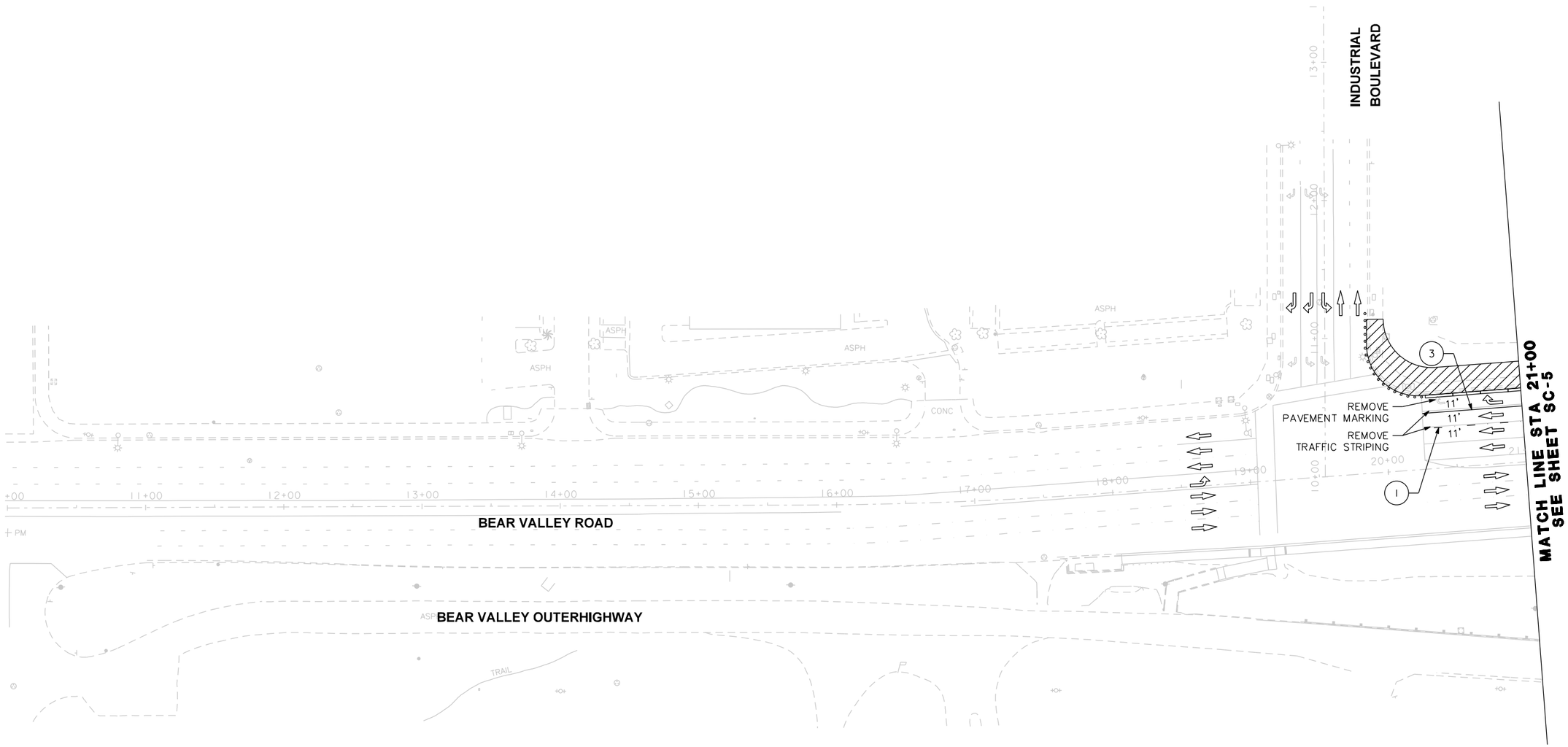

NOTES:

1. SEE SHEET SC-1 FOR NOTES AND LEGEND.

NO.	REVISION	BY	DATE

APPROVED BY: CITY ENGINEER BRIAN GENGLER DATE: R.C.E. EXP. 03-31-16

DESIGNED: KRIS KOFOED

DRAWN: BRYAN FRASER

CHECKED: JUANN RAMOS

RECORD DRAWING DATE:

SCALE HORIZ: 1" = 40' VERT: N/A

PROJECT NO. XXXXX
CAD FILE: ...\511\2007_ma05.dgn

CITY OF VICTORVILLE
ENGINEERING DIVISION
14343 CIVIC DRIVE,
VICTORVILLE, CA 92392
(760) 955-5158

DOKKEN ENGINEERING
110 BLUE RAVINE ROAD SUITE 200, FOLSOM CA. 916-858-0642

JUANN RAMOS, PROJECT ENGINEER DATE

REGISTERED PROFESSIONAL ENGINEER JUANN RAMOS No. 61931 Exp. 09/30/19 CIVIL STATE OF CALIFORNIA

BEAR VALLEY ROAD OH AT BNSF RAILROAD

STAGE CONSTRUCTION
STAGE 2

SC-5

DWG. NO.

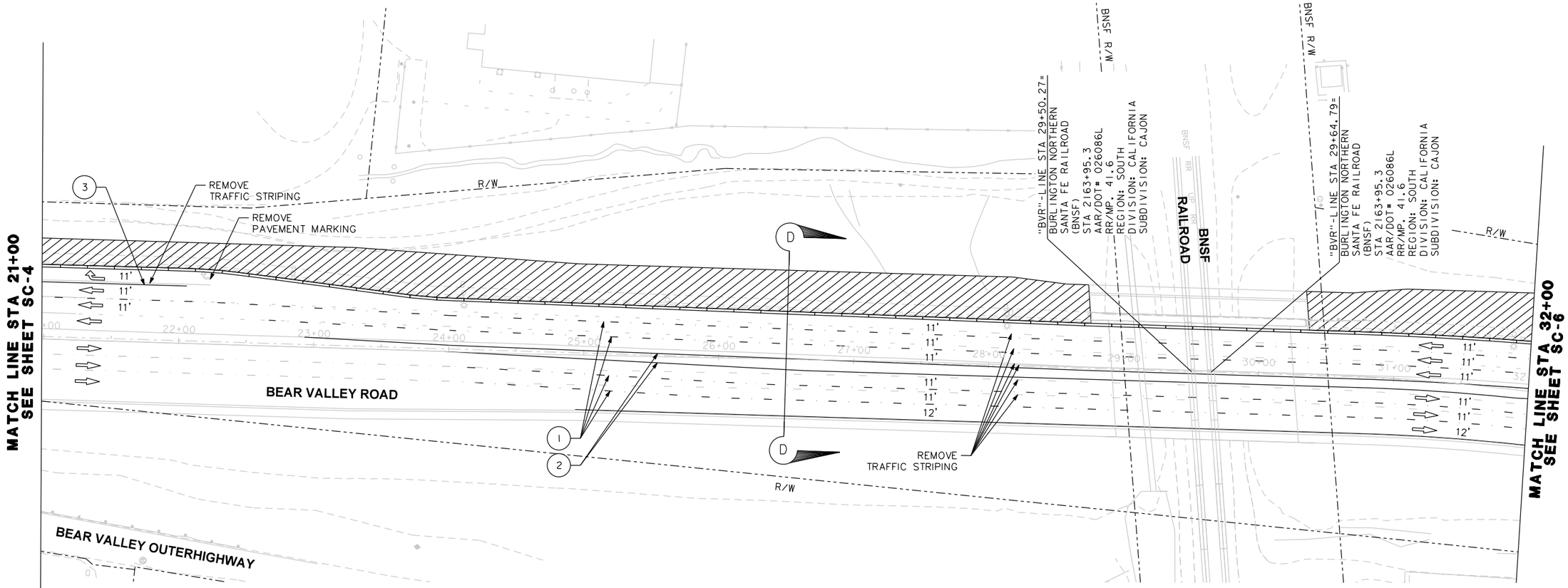

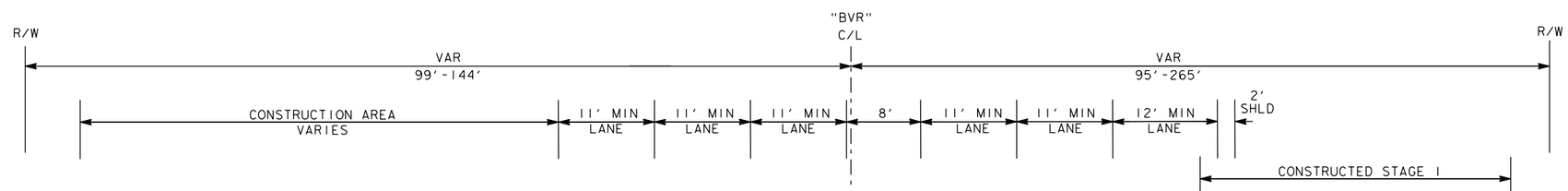

NOTES:

1. SEE SHEET SC-1 FOR NOTES AND LEGEND.

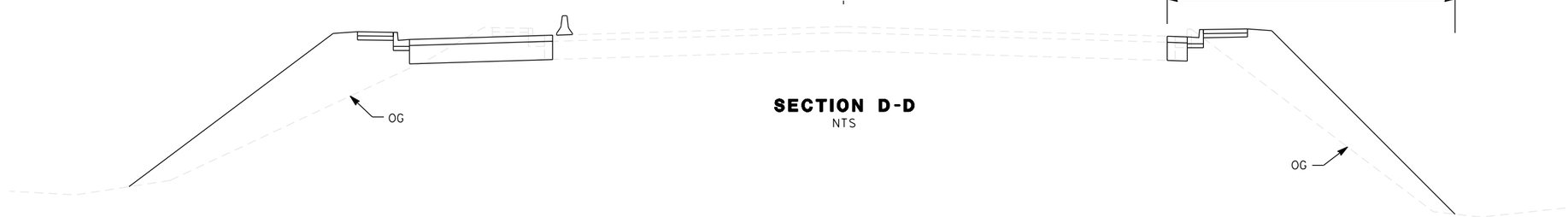

SECTION D-D
NTS

NO.	REVISION	BY	DATE

APPROVED BY: CITY ENGINEER BRIAN GENGLER DATE: R.C.E. EXP. 03-31-16

DESIGNED: KRIS KOFOED
DRAWN: BRYAN FRASER
CHECKED: JUANN RAMOS

RECORD DRAWING DATE:
SCALE HORIZ: 1" = 40' VERT: N/A
PROJECT NO. XXXXX
CAD FILE: ...\SI1\2007_ma06.dgn

CITY OF VICTORVILLE
ENGINEERING DIVISION
14343 CIVIC DRIVE,
VICTORVILLE, CA 92392
(760) 955-5158

DOKKEN ENGINEERING
110 BLUE RAVINE ROAD SUITE 200, FOLSOM CA. 916-858-0642
JUANN RAMOS, PROJECT ENGINEER DATE

REGISTERED PROFESSIONAL ENGINEER JUANN RAMOS No. 61931 Exp. 09/30/19 CIVIL STATE OF CALIFORNIA

BEAR VALLEY ROAD OH AT BNSF RAILROAD

STAGE CONSTRUCTION
STAGE 2

31 OF 81
SC-6
DWG. NO.

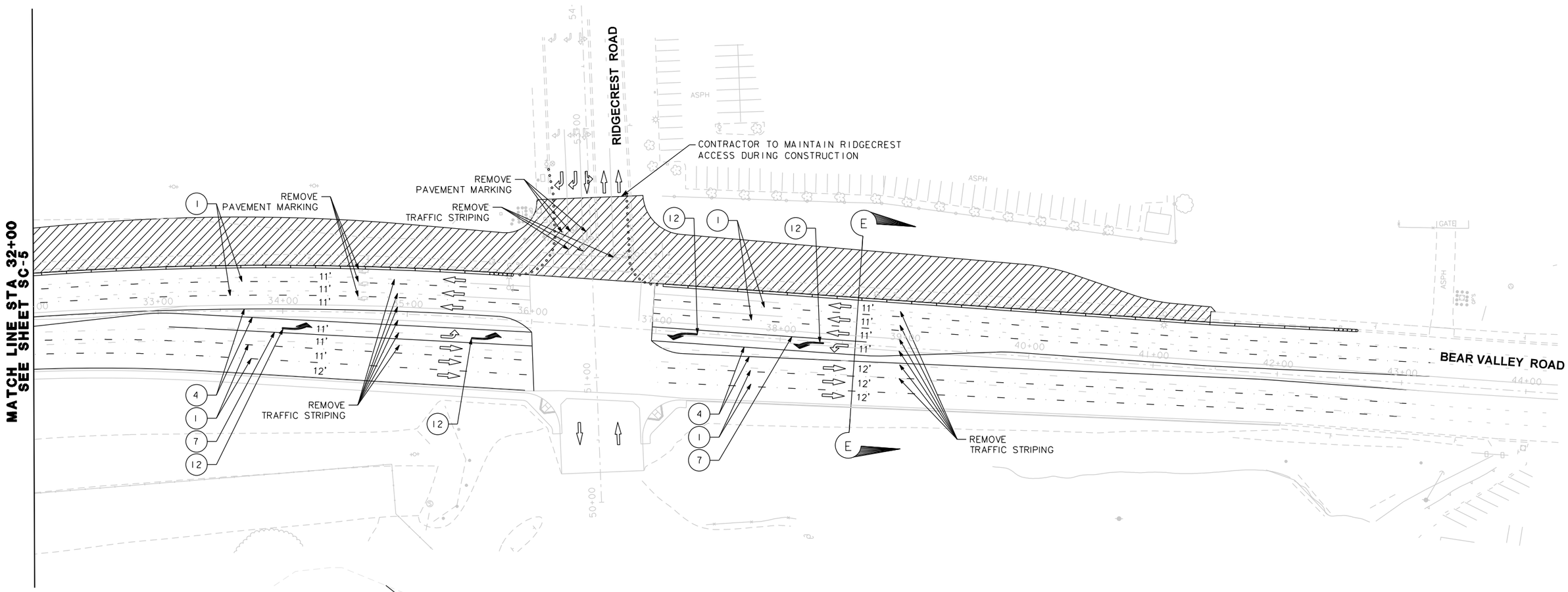

NOTES:

1. SEE SHEET SC-1 FOR NOTES AND LEGEND.

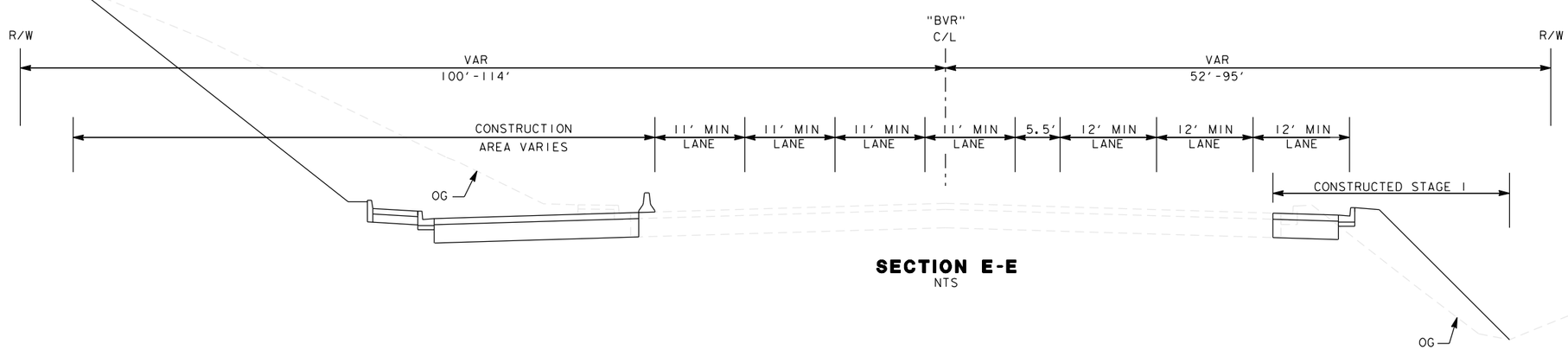

SECTION E-E
NTS

NO.	REVISION	BY	DATE

APPROVED BY: CITY ENGINEER BRIAN GENGLER DATE: R.C.E. EXP. 03-31-16

DESIGNED: KRIS KOFOED
DRAWN: BRYAN FRASER
CHECKED: JUANN RAMOS

RECORD DRAWING DATE:
SCALE HORIZ: 1" = 40' VERT: N/A
PROJECT NO. XXXXX
CAD FILE: ...\511\2007_ma07.dgn

CITY OF VICTORVILLE
ENGINEERING DIVISION
14343 CIVIC DRIVE,
VICTORVILLE, CA 92392
(760) 955-5158

DOKKEN ENGINEERING
110 BLUE RAVINE ROAD SUITE 200, FOLSOM CA. 916-858-0642

JUANN RAMOS, PROJECT ENGINEER DATE

REGISTERED PROFESSIONAL ENGINEER JUANN RAMOS No. 61931 Exp. 09/30/19 CIVIL STATE OF CALIFORNIA

BEAR VALLEY ROAD OH AT BNSF RAILROAD

STAGE CONSTRUCTION STAGE 2

SC-7

DWG. NO.

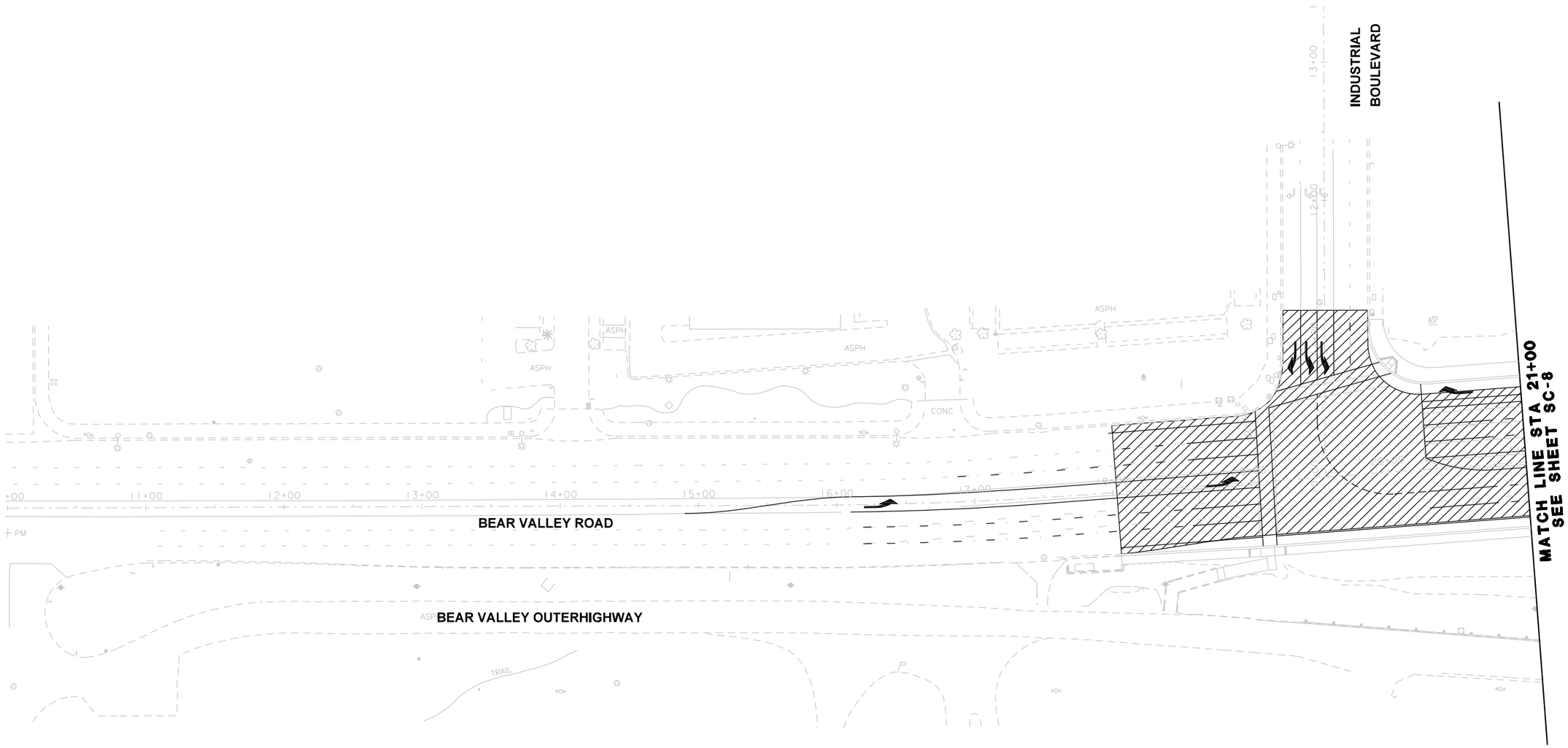

NOTES:

1. SEE SHEET SC-1 FOR NOTES AND LEGEND.

NO.	REVISION	BY	DATE

APPROVED BY: CITY ENGINEER _____ BRIAN GENGLER DATE: _____ R.C.E. EXP. 03-31-16

DESIGNED: KRIS KOFOED

DRAWN: BRYAN FRASER

CHECKED: JUANN RAMOS

RECORD DRAWING DATE:

SCALE: HORIZ: 1" = 40' VERT: N/A

PROJECT NO. XXXXX
CAD FILE: ...\511\2007_ma08.dgn

CITY OF VICTORVILLE
ENGINEERING DIVISION
14343 CIVIC DRIVE,
VICTORVILLE, CA 92392
(760) 955-5158

DOKKEN ENGINEERING
110 BLUE RAVINE ROAD SUITE 200, FOLSOM CA. 916-858-0642

JUANN RAMOS, PROJECT ENGINEER _____ DATE

REGISTERED PROFESSIONAL ENGINEER JUANN RAMOS No. 61931 Exp. 09/30/19 CIVIL STATE OF CALIFORNIA

BEAR VALLEY ROAD OH AT BNSF RAILROAD

STAGE CONSTRUCTION
STAGE 3

SC-8

DWG. NO.

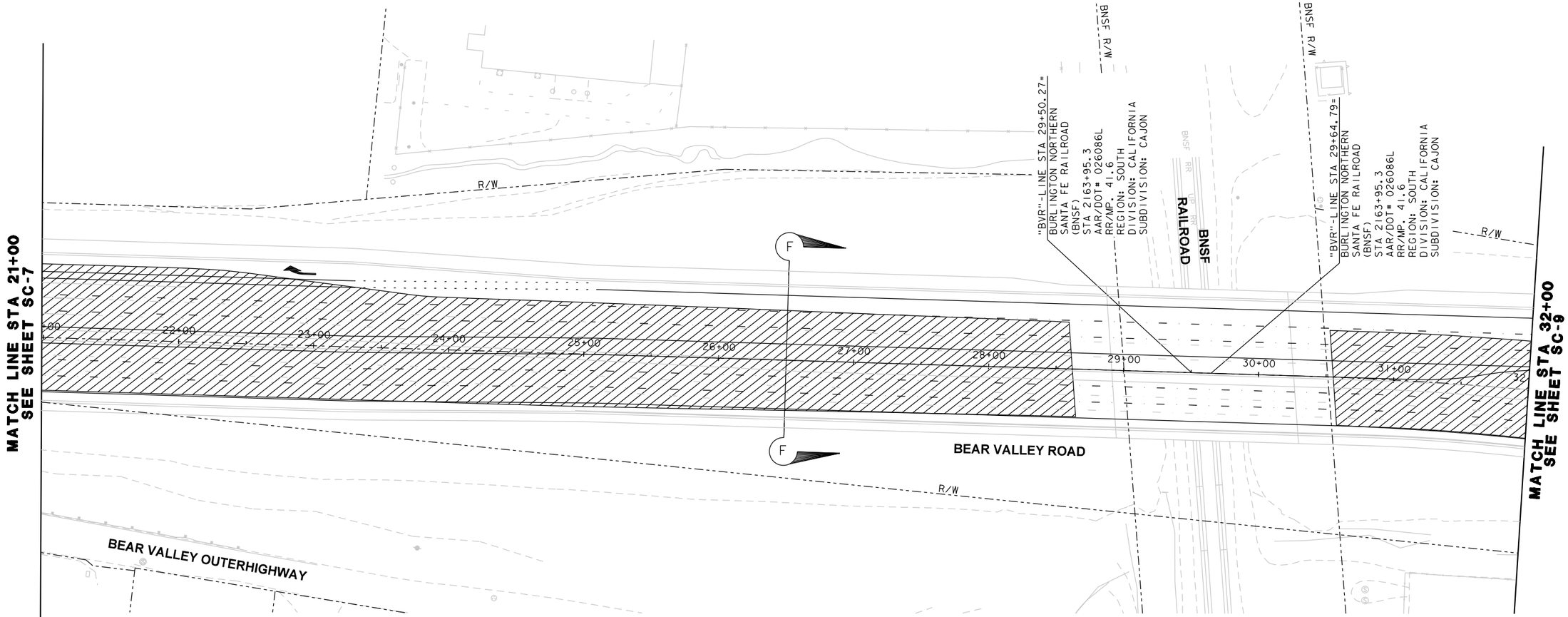

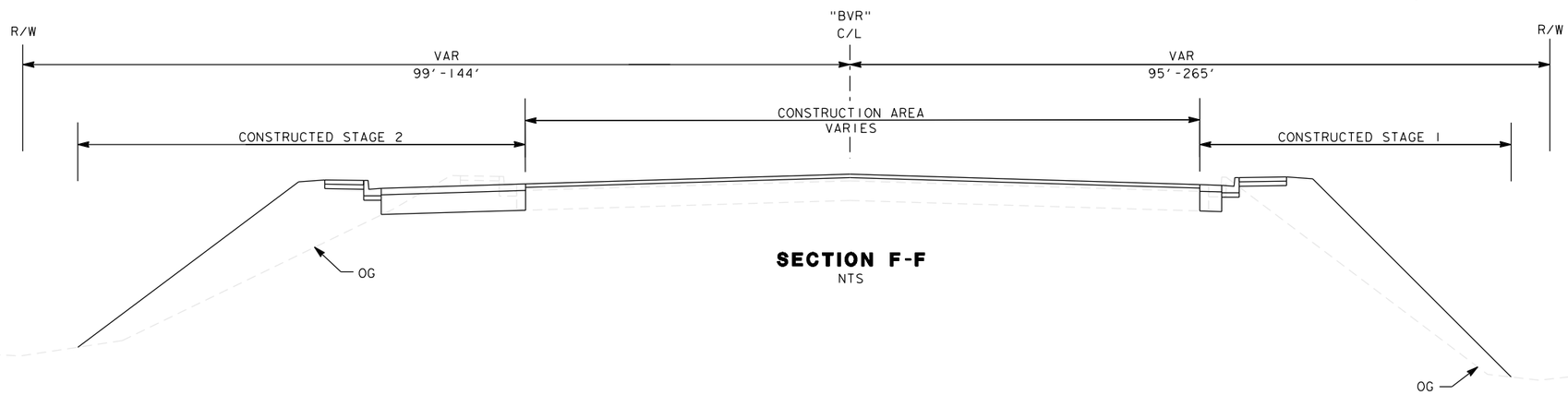

SECTION F-F
NTS

NOTES:

1. SEE SHEET SC-1 FOR NOTES AND LEGEND.

NO.	REVISION	BY	DATE

APPROVED BY: CITY ENGINEER — BRIAN GENGLER — DATE: — R.C.E. EXP. 03-31-16

DESIGNED: KRIS KOFOED
DRAWN: BRYAN FRASER
CHECKED: JUANN RAMOS

RECORD DRAWING DATE:
SCALE: HORIZ: 1" = 40' VERT: N/A
PROJECT NO. XXXXX
CAD FILE: ...\SIT\2007_ma09.dgn

CITY OF VICTORVILLE
ENGINEERING DIVISION
14343 CIVIC DRIVE,
VICTORVILLE, CA 92392
(760) 955-5158

DOKKEN ENGINEERING
110 BLUE RAVINE ROAD SUITE 200, FOLSOM CA. 916-858-0642
JUANN RAMOS, PROJECT ENGINEER — DATE

REGISTERED PROFESSIONAL ENGINEER JUANN RAMOS No. 61931 Exp. 09/30/19 CIVIL STATE OF CALIFORNIA

BEAR VALLEY ROAD OH AT BNSF RAILROAD

STAGE CONSTRUCTION
STAGE 3

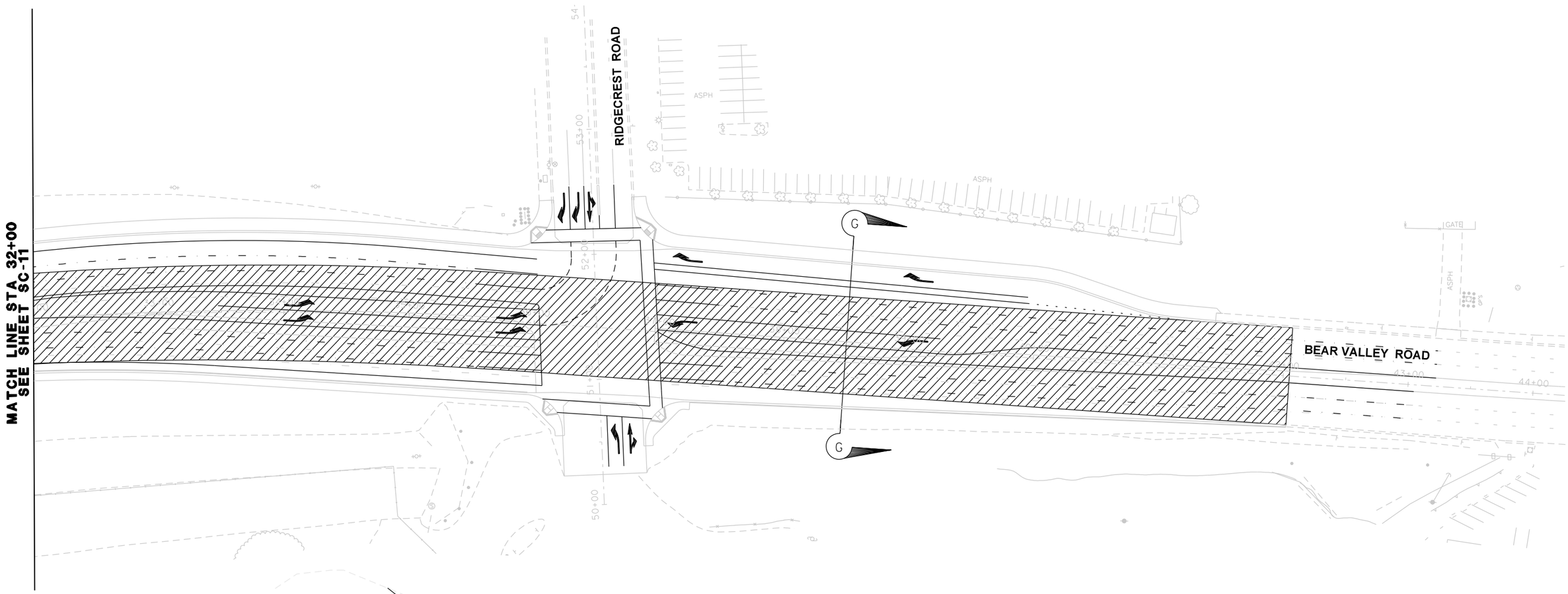

NOTES:

1. SEE SHEET SC-1 FOR NOTES AND LEGEND.

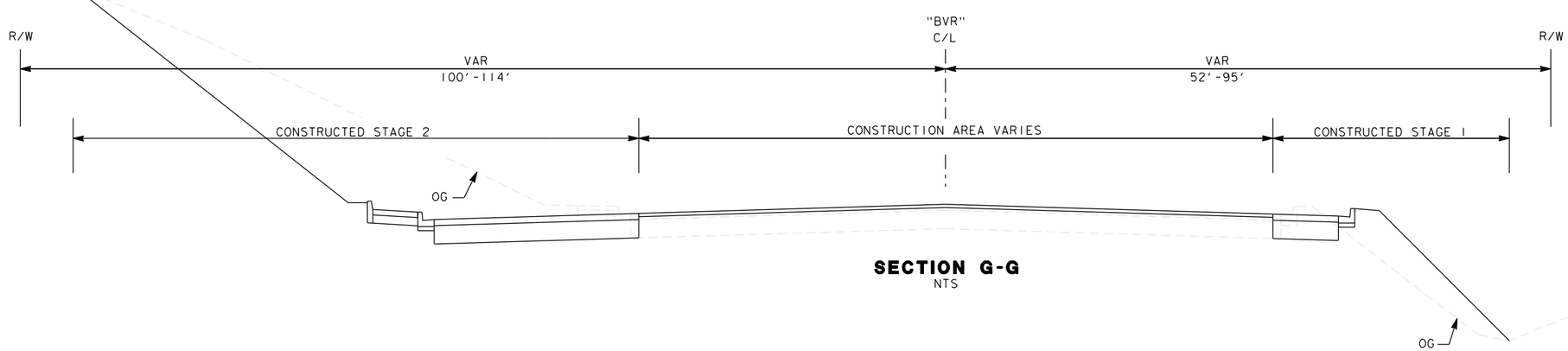

SECTION G-G
NTS

NO.	REVISION	BY	DATE

APPROVED BY: CITY ENGINEER — BRIAN GENGLER — DATE: — R.C.E. EXP. 03-31-16

DESIGNED: KRIS KOFOED
DRAWN: BRYAN FRASER
CHECKED: JUANN RAMOS

RECORD DRAWING DATE:
SCALE — HORIZ: 1" = 40' — VERT: N/A
PROJECT NO. XXXXX
CAD FILE: ...\511\2007_ma10.dgn

CITY OF VICTORVILLE
ENGINEERING DIVISION
14343 CIVIC DRIVE,
VICTORVILLE, CA 92392
(760) 955-5158

DOKKEN ENGINEERING
110 BLUE RAVINE ROAD SUITE 200, FOLSOM CA. 916-858-0642
JUANN RAMOS, PROJECT ENGINEER — DATE

REGISTERED PROFESSIONAL ENGINEER — JUANN RAMOS — No. 61931 — Exp. 09/30/19 — CIVIL — STATE OF CALIFORNIA

BEAR VALLEY ROAD OH AT BNSF RAILROAD

STAGE CONSTRUCTION
STAGE 3

SC-10

DWG. NO.

NOTES:

1. THESE PLANS ACCURATE FOR CONTOUR GRADING ONLY.

LEGEND:

3000 / 2990 — FINISH GRADE CONTOURS 1.0' INTERVAL

F _ _ F/C . . . . . C — GRADING LIMITS

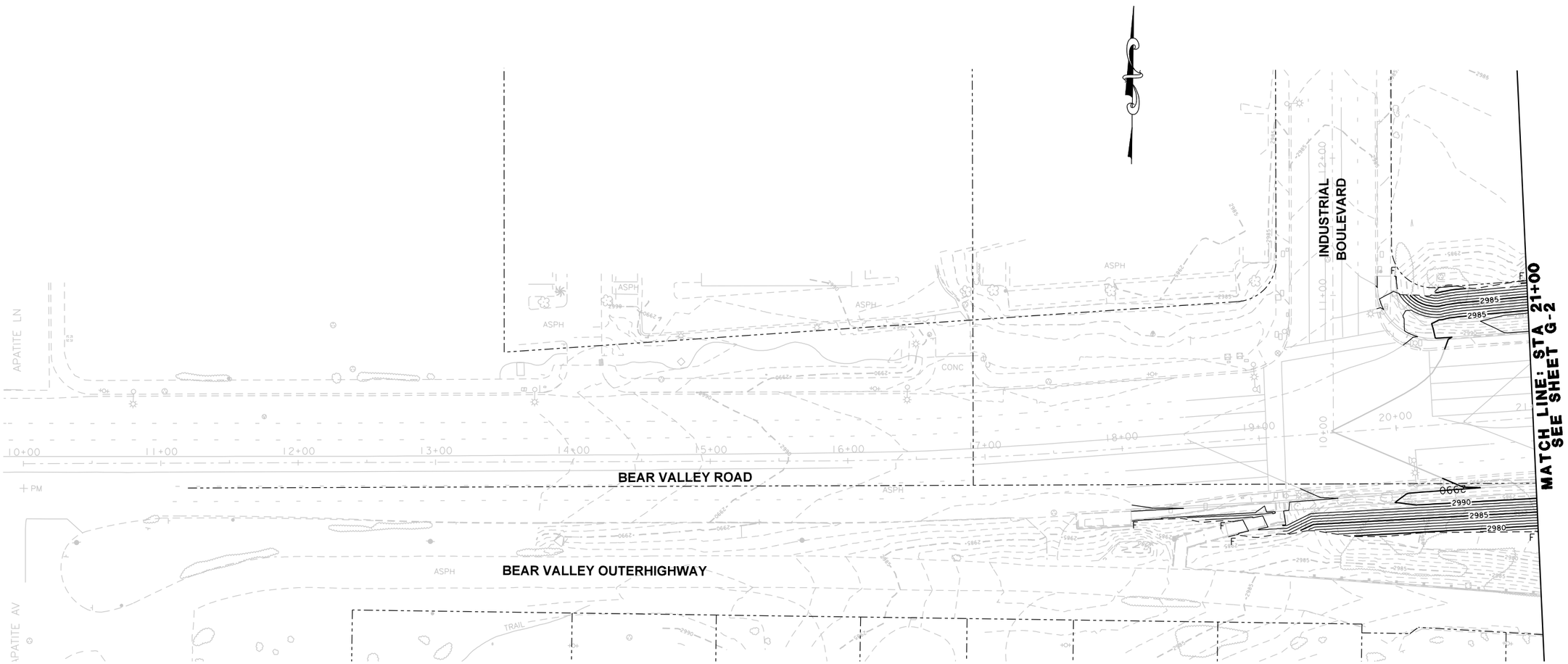

NO.	REVISION	BY	DATE

APPROVED BY: CITY ENGINEER — BRIAN GENGLER — DATE: — R.C.E. EXP. 03-31-16

DESIGNED: KRIS KOFOED

DRAWN: BRYAN FRASER

CHECKED: JUANN RAMOS

RECORD DRAWING DATE:

SCALE — HORIZ: 1" = 40' — VERT: N/A

PROJECT NO. XXXXX
CAD FILE: ...\511\2007_ha01.dgn

CITY OF VICTORVILLE
ENGINEERING DIVISION
14343 CIVIC DRIVE,
VICTORVILLE, CA 92392
(760) 955-5158

DOKKEN ENGINEERING
110 BLUE RAVINE ROAD SUITE 200, FOLSOM CA. 916-858-0642

JUANN RAMOS, PROJECT ENGINEER — DATE

REGISTERED PROFESSIONAL ENGINEER — JUANN RAMOS — No. 61931 — Exp. 09/30/19 — CIVIL — STATE OF CALIFORNIA

BEAR VALLEY ROAD OH AT BNSF RAILROAD

CONTOUR GRADING PLAN

G-1

DWG. NO.

NOTES:

1. FOR NOTES AND LEGEND, SEE SHEET G-1.

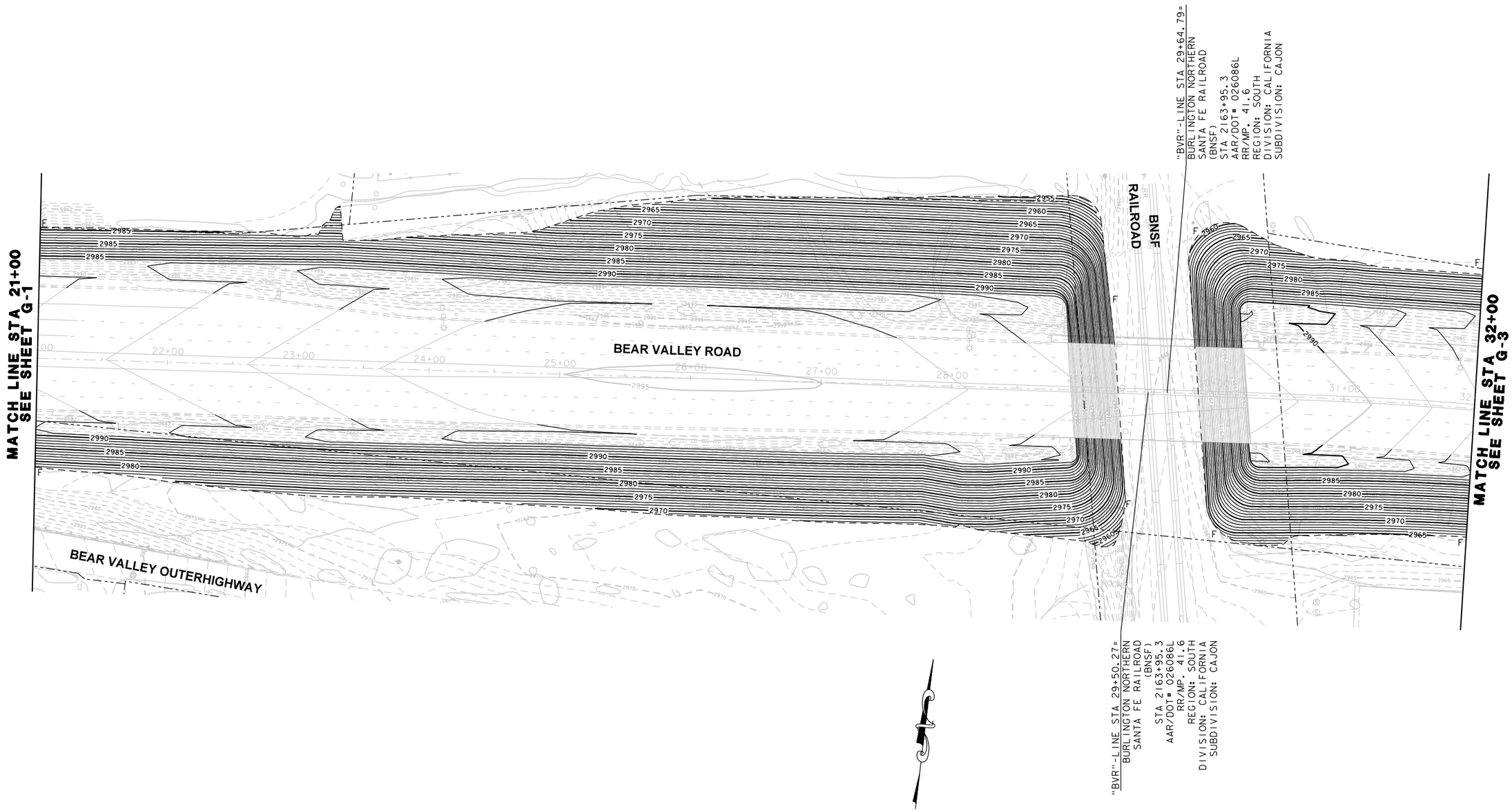

NO.	REVISION	BY	DATE

APPROVED BY: CITY ENGINEER — BRIAN GENGLER — DATE: — R.C.E. EXP. 03-31-16

DESIGNED: KRIS KOFOED

DRAWN: BRYAN FRASER

CHECKED: JUANN RAMOS

RECORD DRAWING DATE:

SCALE: HORIZ: 1" = 40' VERT: N/A

PROJECT NO. XXXXX
CAD FILE: ...\511\2007_ha02.dgn

CITY OF VICTORVILLE
ENGINEERING DIVISION
14343 CIVIC DRIVE,
VICTORVILLE, CA 92392
(760) 955-5158

DOKKEN ENGINEERING
110 BLUE RAVINE ROAD SUITE 200, FOLSOM CA. 916-858-0642

JUANN RAMOS, PROJECT ENGINEER — DATE

REGISTERED PROFESSIONAL ENGINEER — JUANN RAMOS — No. 61931 — Exp. 09/30/19 — CIVIL — STATE OF CALIFORNIA

BEAR VALLEY ROAD OH AT BNSF RAILROAD

CONTOUR GRADING PLAN

G-2

DWG. NO.

NOTES:

1. FOR NOTES AND LEGEND, SEE SHEET G-1.

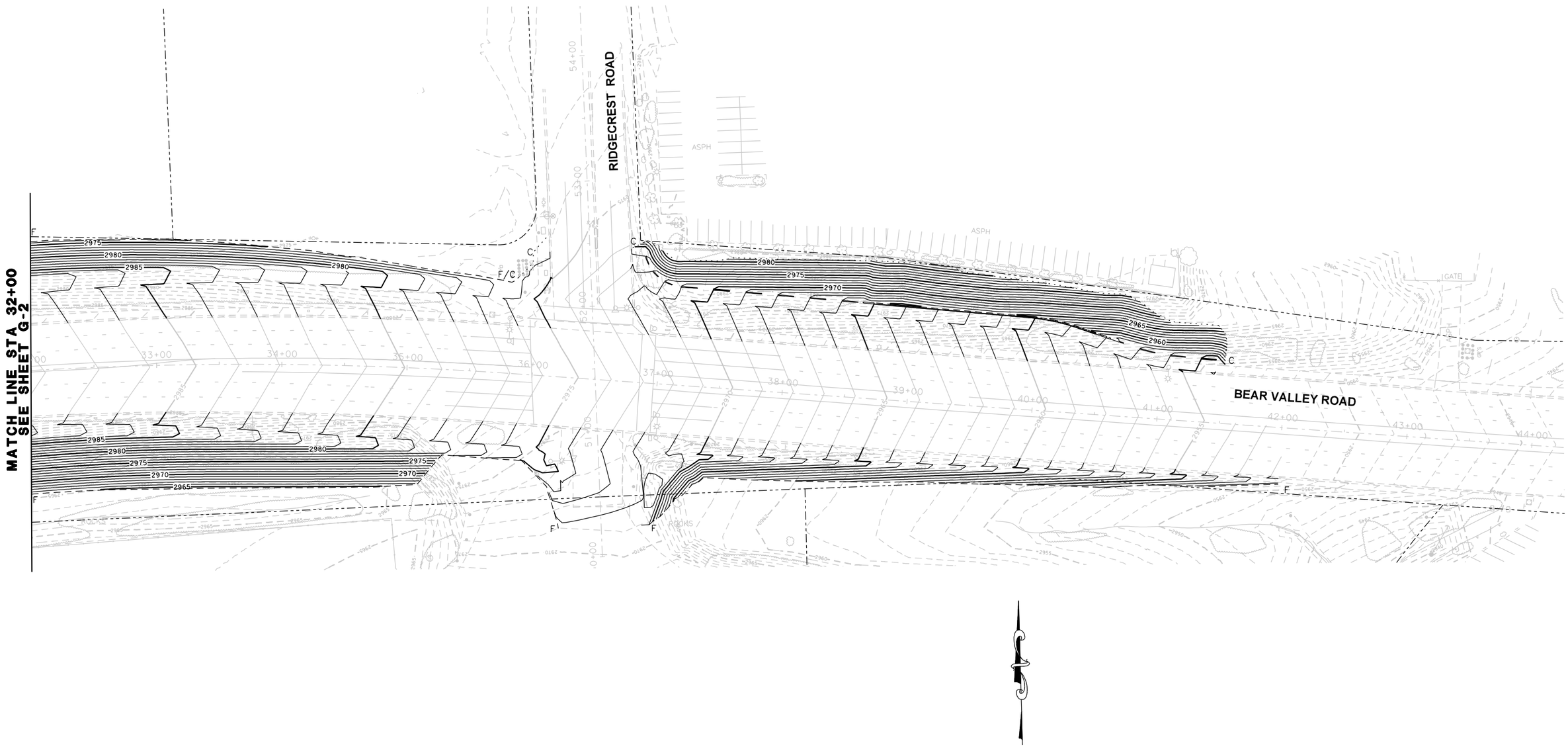

NO.	REVISION	BY	DATE

APPROVED BY: CITY ENGINEER _____ BRIAN GENGLER DATE: _____ R.C.E. EXP. 03-31-16

DESIGNED: KRIS KOFOED

DRAWN: BRYAN FRASER

CHECKED: JUANN RAMOS

RECORD DRAWING DATE:

SCALE: HORIZ: 1" = 40' VERT: N/A

PROJECT NO. XXXXX
CAD FILE: ...\511\2007_ha03.dgn

CITY OF VICTORVILLE
ENGINEERING DIVISION
14343 CIVIC DRIVE,
VICTORVILLE, CA 92392
(760) 955-5158

DOKKEN ENGINEERING
110 BLUE RAVINE ROAD SUITE 200, FOLSOM CA. 916-858-0642

JUANN RAMOS, PROJECT ENGINEER _____ DATE

REGISTERED PROFESSIONAL ENGINEER JUANN RAMOS No. 61931 Exp. 09/30/19 CIVIL STATE OF CALIFORNIA

BEAR VALLEY ROAD OH AT BNSF RAILROAD

CONTOUR GRADING PLAN

38 OF 81

G-3

DWG. NO.

NOTES:

1. ALL LENGTHS AND AREAS ARE FOR THAT SHEET ONLY.
2. THESE PLANS ACCURATE FOR EROSION CONTROL ONLY.

LEGEND:

HYDROSEED

FR FIBER ROLL

SEED MIX

BOTANICAL NAME (COMMON NAME)	PERCENT GERMINATION (MINIMUM)	LB PURE LIVE SEED PER ACRE (SLOPE MEASUREMENT)
ENCELIA FARINOSA (BRITTLEBUSH)	50	0.50
SALVIA COLUMBARIAE (CHIA)	79	0.25
LUPINUS SPARSIFLORUS (COULTER'S LUPINE)	85	3.00
STIPA SPECIOSA (DESERT NEEDLE GRASS)	60	2.00
ATRIPLEX CANESCENS (FOURWING SALTBRUSH)	40	4.00
STIPA HYMENOIDES (INDIAN RICEGRASS)	90	3.00
ARISTIDA PURPUREA (PURPLE THREE-AWN)	70	2.00
(REGREEN/QUICKGUARD)	85	15.00
VULPIA MICROSTACHYS (SMALL FESCUE)	80	3.00
ACMISPON AMERICANUS (SPANISH LOTUS)	75	2.00
AMBROSIA DUMOSA (WHITE BURSAGE)	50	2.00
ALL SEED PRODUCED IN CALIFORNIA ONLY		36.75

EROSION CONTROL (HYDROSEED) SEQUENCE

SEQUENCE	ITEM	MATERIAL		APPLICATION RATE
		DESCRIPTION	TYPE	
STEP 1	HYDROSEED	SEED		36.75 LB/ACRE
		FIBER	WOOD	1000 LB/ACRE
		TACKIFIER	ORGANIC	PER MANUFACTURER

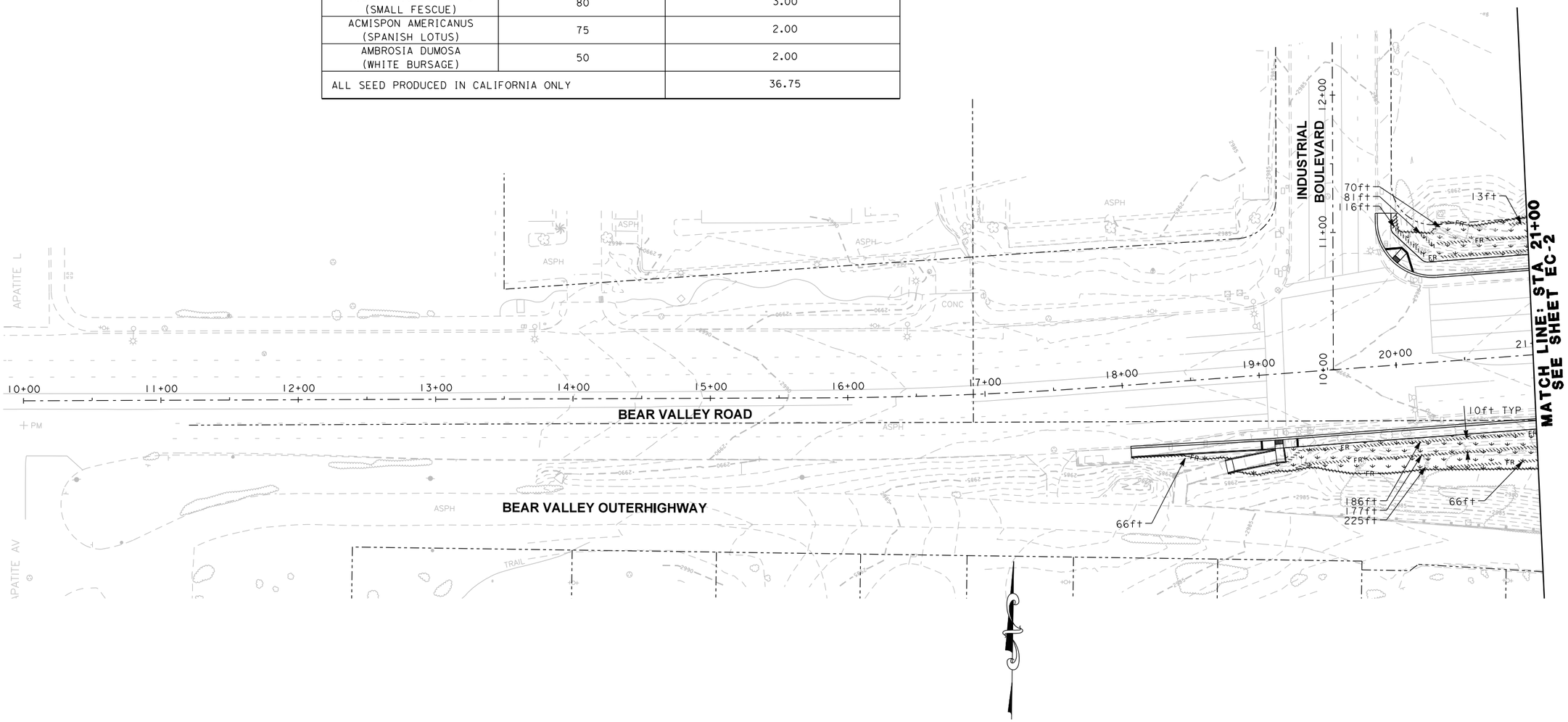

NO.	REVISION	BY	DATE

APPROVED BY: CITY ENGINEER BRIAN GENGLER DATE: R.C.E. EXP. 03-31-16

DESIGNED: KRIS KOFOED

DRAWN: BRYAN FRASER

CHECKED: JUANN RAMOS

RECORD DRAWING DATE:

SCALE HORIZ: 1" = 40' VERT: N/A

PROJECT NO. XXXXX
CAD FILE: ...\511\2007_ge01.dgn

CITY OF VICTORVILLE
ENGINEERING DIVISION
14343 CIVIC DRIVE,
VICTORVILLE, CA 92392
(760) 955-5158

DOKKEN ENGINEERING
110 BLUE RAVINE ROAD SUITE 200, FOLSOM CA. 916-858-0642

JUANN RAMOS, PROJECT ENGINEER DATE

REGISTERED PROFESSIONAL ENGINEER JUANN RAMOS No. 61931 Exp. 09/30/19 CIVIL STATE OF CALIFORNIA

BEAR VALLEY ROAD OH AT BNSF RAILROAD

EROSION CONTROL PLAN

EC-1

DWG. NO.

NOTES:

1. FOR NOTES AND LEGEND SEE SHEET EC-1.

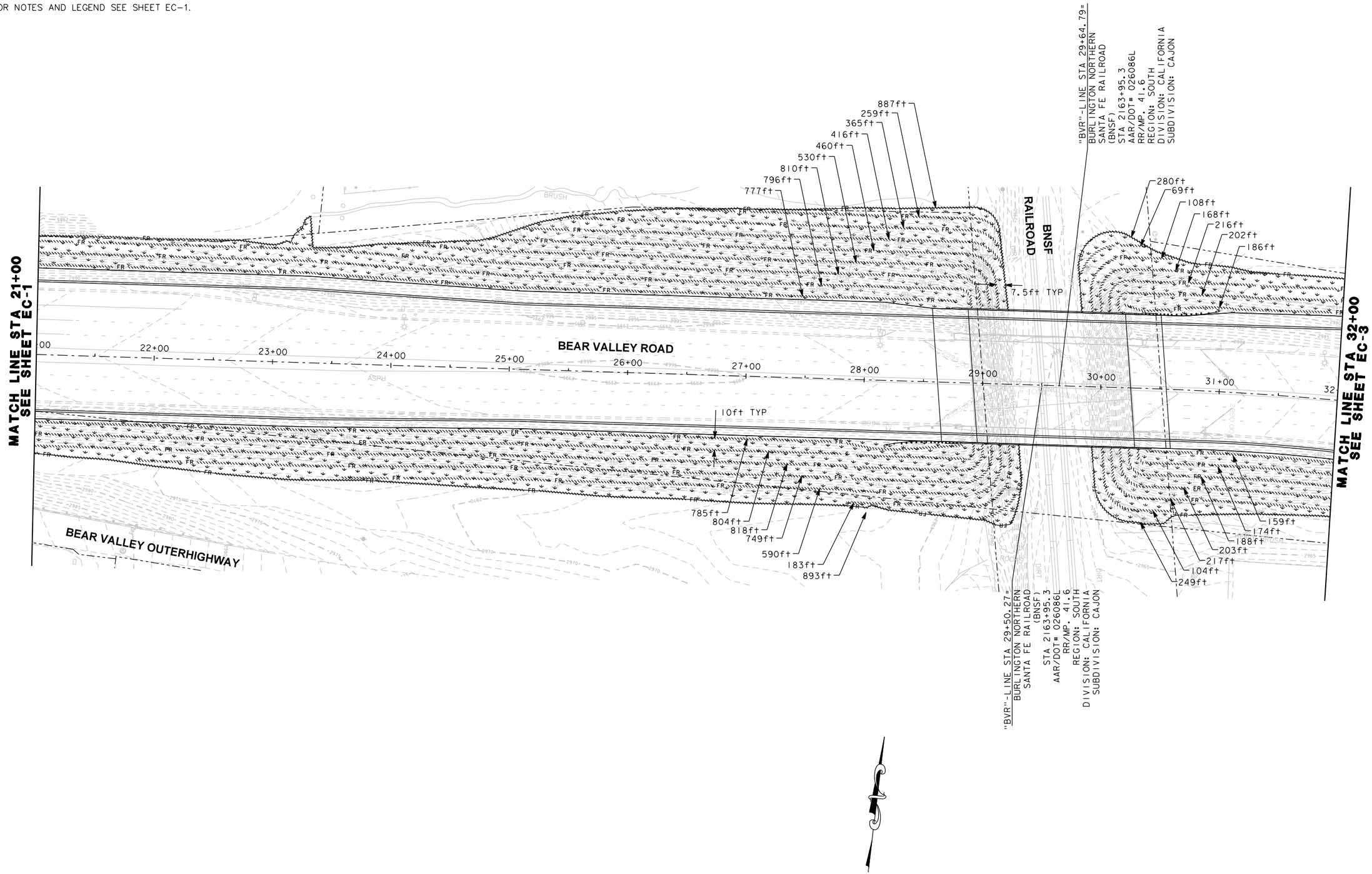

NO.	REVISION	BY	DATE

APPROVED BY: CITY ENGINEER — BRIAN GENGLER — DATE: — R.C.E. EXP. 03-31-16

DESIGNED: KRIS KOFOED

DRAWN: BRYAN FRASER

CHECKED: JUANN RAMOS

RECORD DRAWING DATE:

SCALE — HORIZ: 1" = 40' — VERT: N/A

PROJECT NO. XXXXX
CAD FILE: ...\511\2007_ge02.dgn

CITY OF VICTORVILLE
ENGINEERING DIVISION
14343 CIVIC DRIVE,
VICTORVILLE, CA 92392
(760) 955-5158

DOKKEN ENGINEERING
110 BLUE RAVINE ROAD SUITE 200, FOLSOM CA. 916-858-0642

JUANN RAMOS, PROJECT ENGINEER — DATE

REGISTERED PROFESSIONAL ENGINEER — JUANN RAMOS — No. 61931 — Exp. 09/30/19 — CIVIL — STATE OF CALIFORNIA

BEAR VALLEY ROAD OH AT BNSF RAILROAD

EROSION CONTROL PLAN

EC-2

DWG. NO.

NOTES:

1. FOR NOTES AND LEGEND SEE SHEET EC-1.

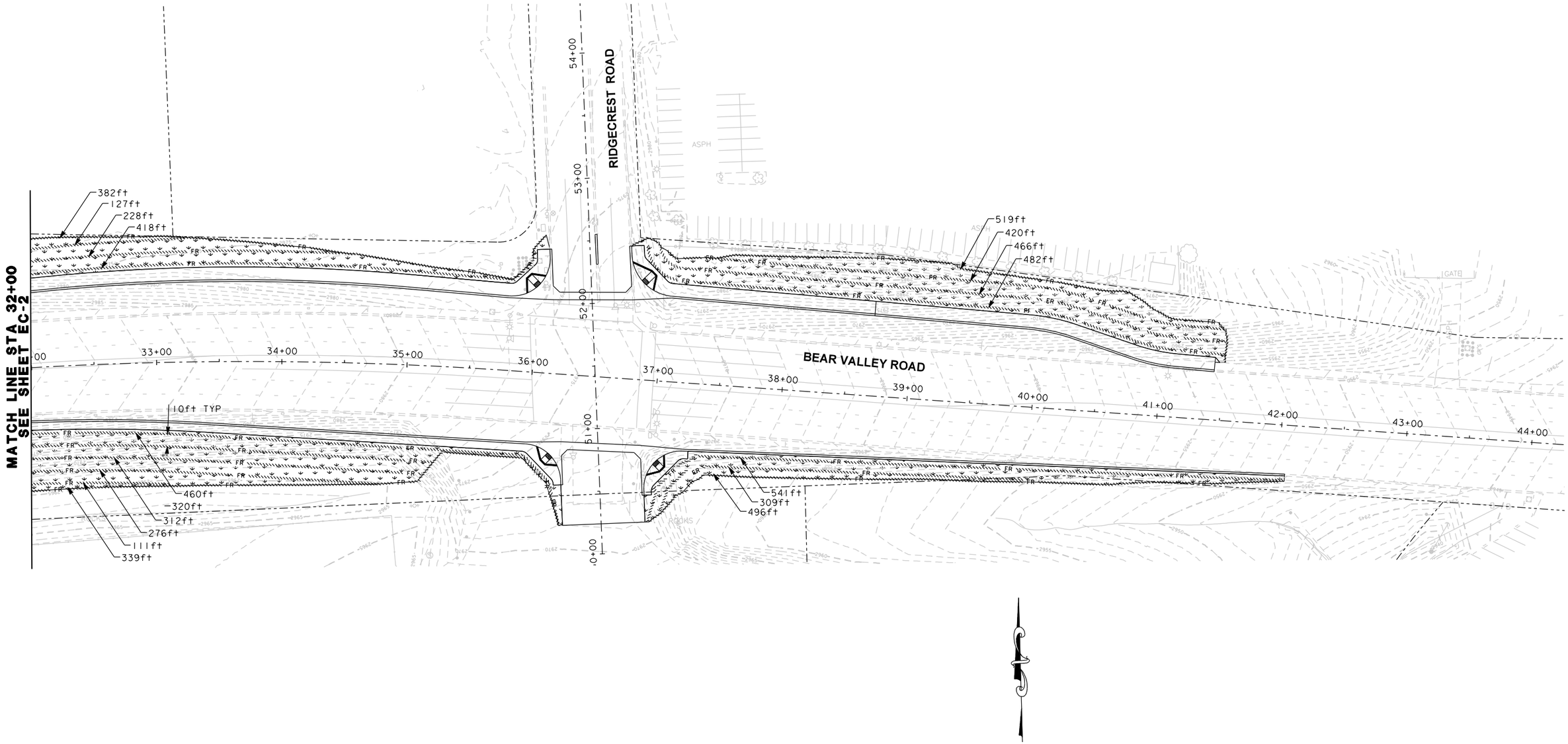

NO.	REVISION	BY	DATE

APPROVED BY: CITY ENGINEER — BRIAN GENGLER — DATE: — R.C.E. EXP. 03-31-16

DESIGNED: KRIS KOFOED

DRAWN: BRYAN FRASER

CHECKED: JUANN RAMOS

RECORD DRAWING DATE:

SCALE — HORIZ: 1" = 40' — VERT: N/A

PROJECT NO. XXXXX
CAD FILE: ...\5112007_ge03.dgn

CITY OF VICTORVILLE
ENGINEERING DIVISION
14343 CIVIC DRIVE,
VICTORVILLE, CA 92392
(760) 955-5158

DOKKEN ENGINEERING
110 BLUE RAVINE ROAD SUITE 200, FOLSOM CA. 916-858-0642

JUANN RAMOS, PROJECT ENGINEER — DATE

REGISTERED PROFESSIONAL ENGINEER — JUANN RAMOS — No. 61931 — Exp. 09/30/19 — CIVIL — STATE OF CALIFORNIA

BEAR VALLEY ROAD OH AT BNSF RAILROAD

EROSION CONTROL PLAN

EC-3

DWG. NO.

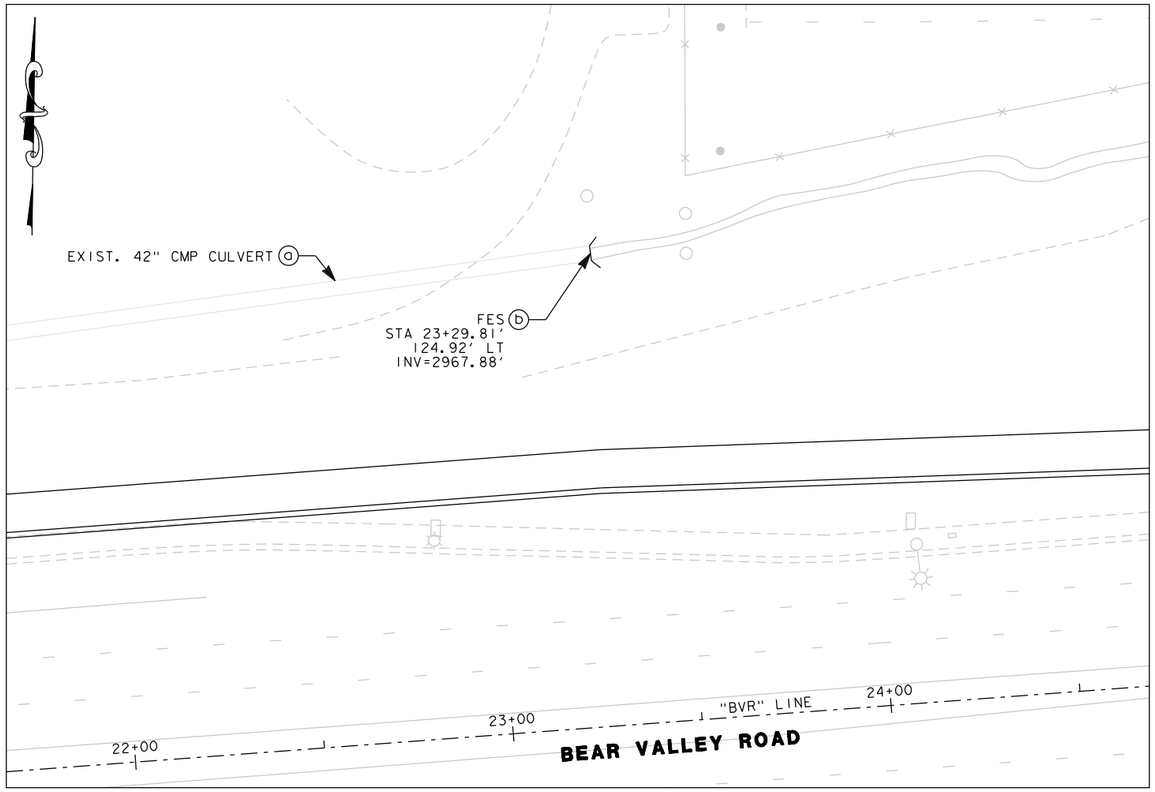

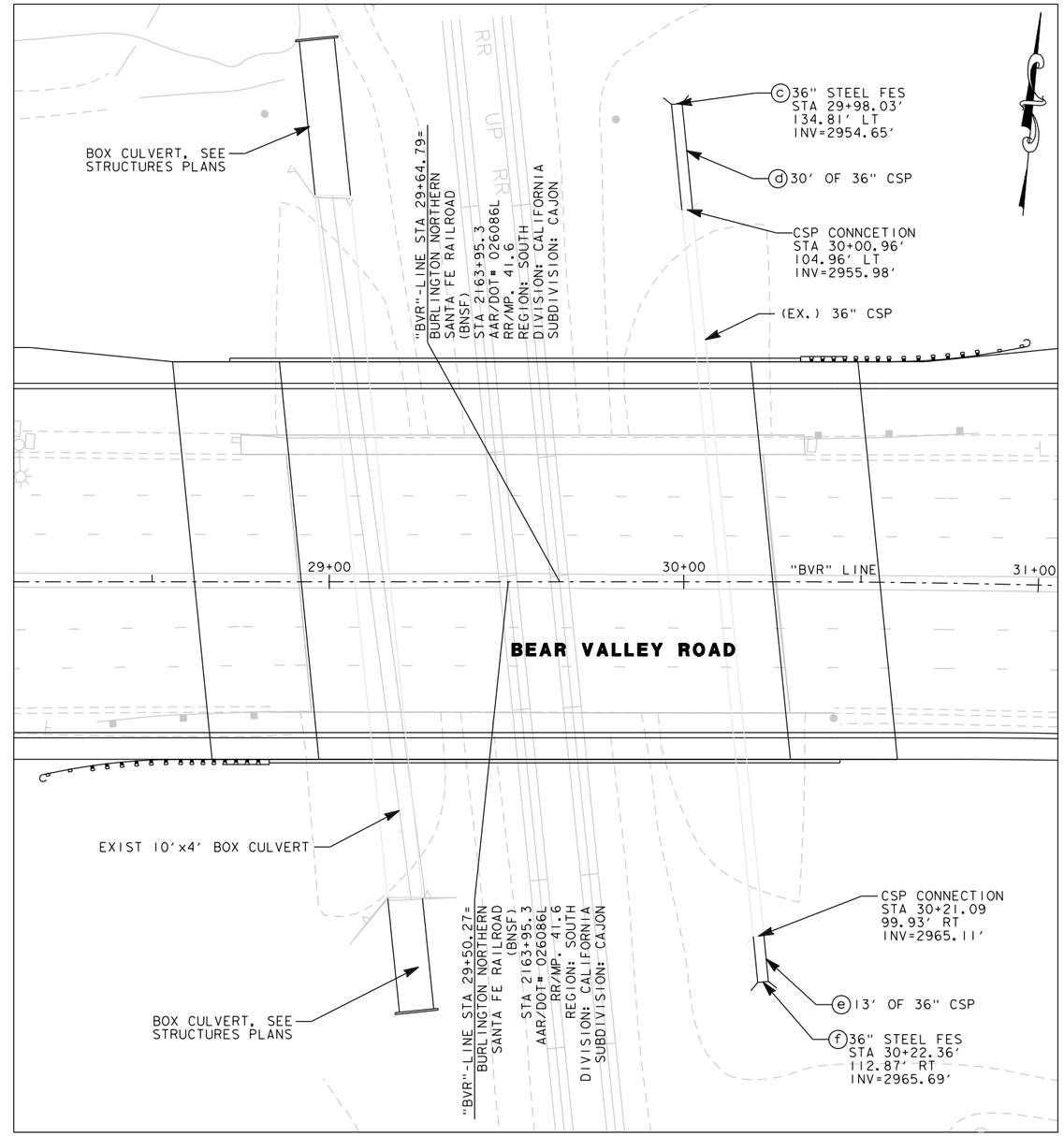

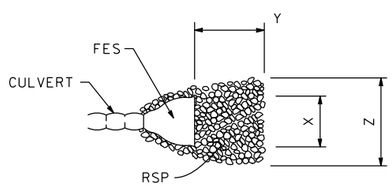

PLAN

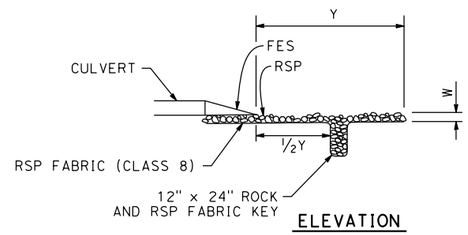

ELEVATION

NOTES:

1. THIS SHEET ACCURATE FOR DRAINAGE ONLY.
2. SEE STRUCTURES PLANS FOR 10'X4' BOX CULVERT EXTENTION.
3. FOR DRAINAGE DETAILS, SEE THIS SHEET.
4. FOR FES SEE STD. D94A.
5. FOR CSP CONNECTIONS, SEE STD. D97

ROCK SLOPE PROTECTION

UNIT No.	W (FT)	X (FT)	Y (FT)	Z (FT)	RSP TYPE
(b)	1.0	6.0	8.0	10.0	FACING, METHOD B
(c)	1.0	6.0	8.0	10.0	FACING, METHOD B
(f)	1.0	6.0	8.0	10.0	FACING, METHOD B

NO.	REVISION	BY	DATE

APPROVED BY: CITY ENGINEER — BRIAN GENGLER — DATE: — R.C.E. EXP. 03-31-16

DESIGNED: KRIS KOFOED
DRAWN: BRYAN FRASER
CHECKED: JUANN RAMOS

RECORD DRAWING DATE:
SCALE — HORIZ: N/A — VERT: N/A
PROJECT NO. XXXXX
CAD FILE: ...\511\2007_1a01.dgn

CITY OF VICTORVILLE
ENGINEERING DIVISION
14343 CIVIC DRIVE,
VICTORVILLE, CA 92392
(760) 955-5158

DOKKEN ENGINEERING
110 BLUE RAVINE ROAD SUITE 200, FOLSOM CA. 916-858-0642

JUANN RAMOS, PROJECT ENGINEER — DATE

REGISTERED PROFESSIONAL ENGINEER — JUANN RAMOS — No. 61931 — Exp. 09/30/19 — CIVIL — STATE OF CALIFORNIA

BEAR VALLEY ROAD OH AT BNSF RAILROAD

DRAINAGE PLAN

D-1

DWG. NO.

PAVEMENT DELINEATION GENERAL NOTES:

1. ALL STRIPING, AND PAVEMENT MARKINGS SHALL BE IN CONFORMANCE WITH CALIFORNIA MUTCD, LATEST EDITION, CALTRANS STANDARD PLANS AND SPECIFICATIONS LATEST EDITION, THE CITY OF VICTORVILLE ENGINEERING DEPARTMENT, AND SPECIAL PROVISIONS OF THIS PROJECT.
2. TRAFFIC STRIPES AND PAVEMENT MARKINGS SHALL BE ALKYD EXTRUDED THERMOPLASTIC. WITH REFLECTIVE BEADS IN EACH APPLICATION.
3. DEBRIS FROM REMOVAL OPERATIONS SHALL BE CONTAINED WITHIN THE WORK AREA AND THE CONTRACTOR SHALL TAKE ALL PRECAUTIONS NECESSARY TO PROTECT PERSONS AND PROPERTY ADJACENT TO THE SANBLASTING OPERATIONS. THE DEBRIS RESULTING FROM THE SANDBLASTING SHALL BE IMMEDIATELY REMOVED AND DISPOSED OF BY THE CONTRACTOR. DEBRIS WITHIN THE ROADWAY SHALL BE REMOVED BY MECHANICAL SWEEPING OR HIGH-POWERED VACUUM.
4. ALL STRIPING AND PAVEMENT MARKING REMOVALS SHOWN ON THE PLAN SHALL BE REMOVED BY GRINDING OR SANDBLASTING AS DIRECTED BY THE ENGINEER.
5. THERMOPLASTIC CROSSWALKS SHALL HAVE 10 FEET BETWEEN 12 INCH WHITE STRIPES.
6. ALL REQUIRED STRIPING, PAVEMENT, AND MARKERS SHALL BE PROVIDED AND INSTALLED BY THE CONTRACTOR IN ACCORDANCE WITH THE STRIPING DETAILS SHOWN ON THE PAVEMENT DELINEATION PLANS. INSTALLATION SHALL BE COMPLETED WITHIN SEVEN WORKING DAYS OF ROADWAY STRIPING.
7. STRIPING LAYOUT SHALL BE APPROVED BY THE RESIDENT ENGINEER AND THE CITY ENGINEERING DEPARTMENT PRIOR TO THE APPLICATION OF PERMANENT PAINT. CONTACT THE ENGINEERING DEPARTMENT AT (760) 955-5158 A MINIMUM OF 48 HOURS PRIOR OF LAYOUT.
8. PERMANENT LEGENDS SHALL MATCH CALTRANS STANDARD DETAILS.
9. ALL PAVEMENT MARKINGS SHALL BE PARALLEL TO ADJACENT STRIPING AND CENTERED IN THE LANE.

STRIPING CONSTRUCTION NOTES:

1. DETAIL 12
2. DETAIL 22
3. DETAIL 27B
4. DETAIL 29
5. DETAIL 30
6. DETAIL 32
7. DETAIL 38A
8. DETAIL 39
9. DETAIL 39A
10. DETAIL 40
11. CROSSWALK OR LIMIT LINE MARKING
12. BIKE LANE SYMBOL AND BIKE LANE ARROW
13. PAINT TYPE III (L) PAVEMENT ARROW
14. PAINT TYPE III (R) PAVEMENT ARROW
15. PAINT TYPE II (L) PAVEMENT ARROW
16. PAINT TYPE II (R) PAVEMENT ARROW

LEGEND:

- ○ PAVEMENT DELINEATION CURVES (BC,EC,PCC,PRC)
- △ PAVEMENT DELINEATION ANGLE POINTS
- ⊢ BEGIN/END PAVEMENT DELINEATION DETAIL
- ⊢⊣ CHANGE IN PAVEMENT DELINEATION DETAIL

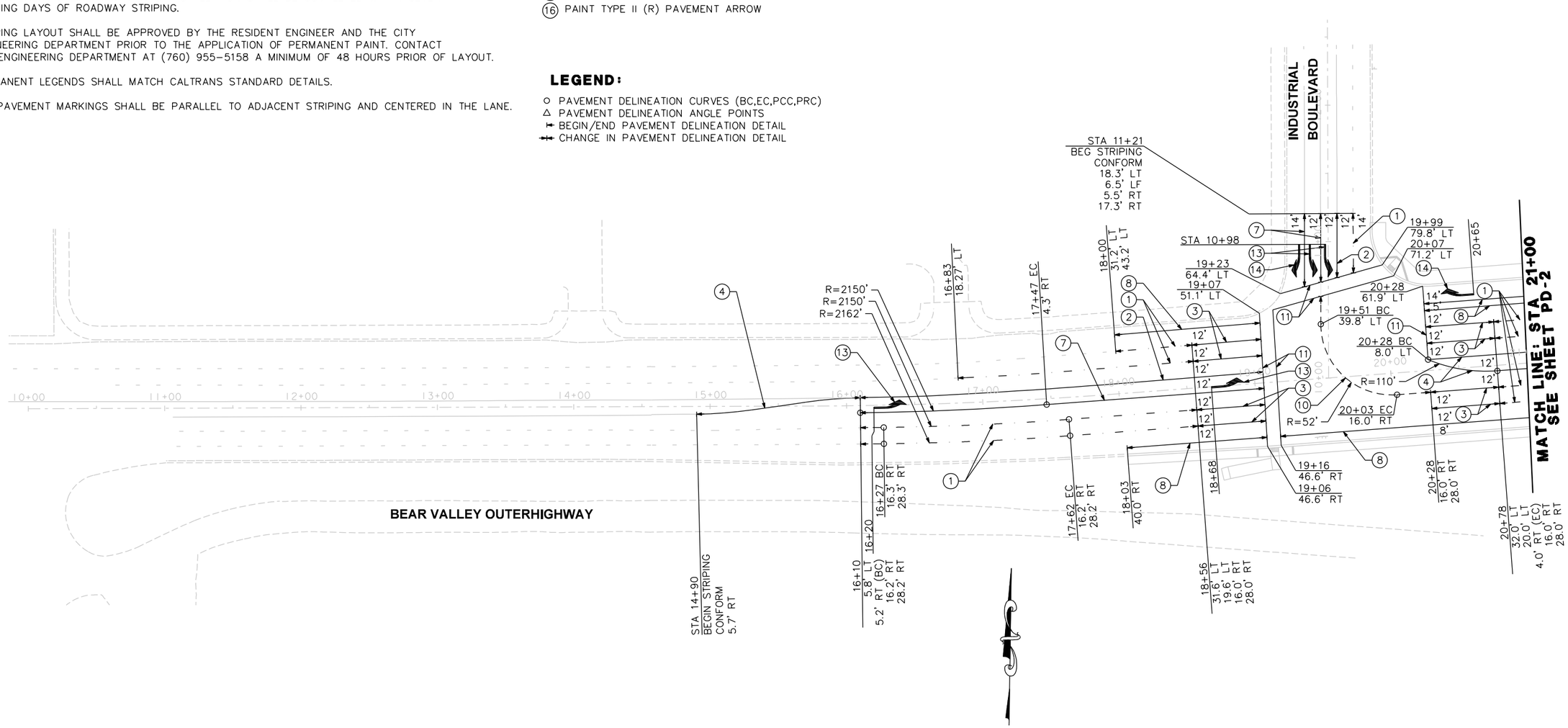

NO.	REVISION	BY	DATE

APPROVED BY: CITY ENGINEER BRIAN GENGLER DATE: R.C.E. EXP. 03-31-16

DESIGNED: KRIS KOFOED
DRAWN: BRYAN FRASER
CHECKED: JUANN RAMOS

RECORD DRAWING DATE:
SCALE HORIZ: 1" = 40' VERT: N/A
PROJECT NO. XXXXX
CAD FILE: ...\S11120007_na01.dgn

CITY OF VICTORVILLE
ENGINEERING DIVISION
14343 CIVIC DRIVE,
VICTORVILLE, CA 92392
(760) 955-5158

DOKKEN ENGINEERING
110 BLUE RAVINE ROAD SUITE 200, FOLSOM CA. 916-858-0642
JUANN RAMOS, PROJECT ENGINEER DATE

REGISTERED PROFESSIONAL ENGINEER JUANN RAMOS No. 61931 Exp. 09/30/19 CIVIL STATE OF CALIFORNIA

BEAR VALLEY ROAD OH AT BNSF RAILROAD

STRIPING PLAN

PD-1

DWG. NO.

NOTES:

1. FOR STRIPING NOTES AND LEGEND SEE PD-1

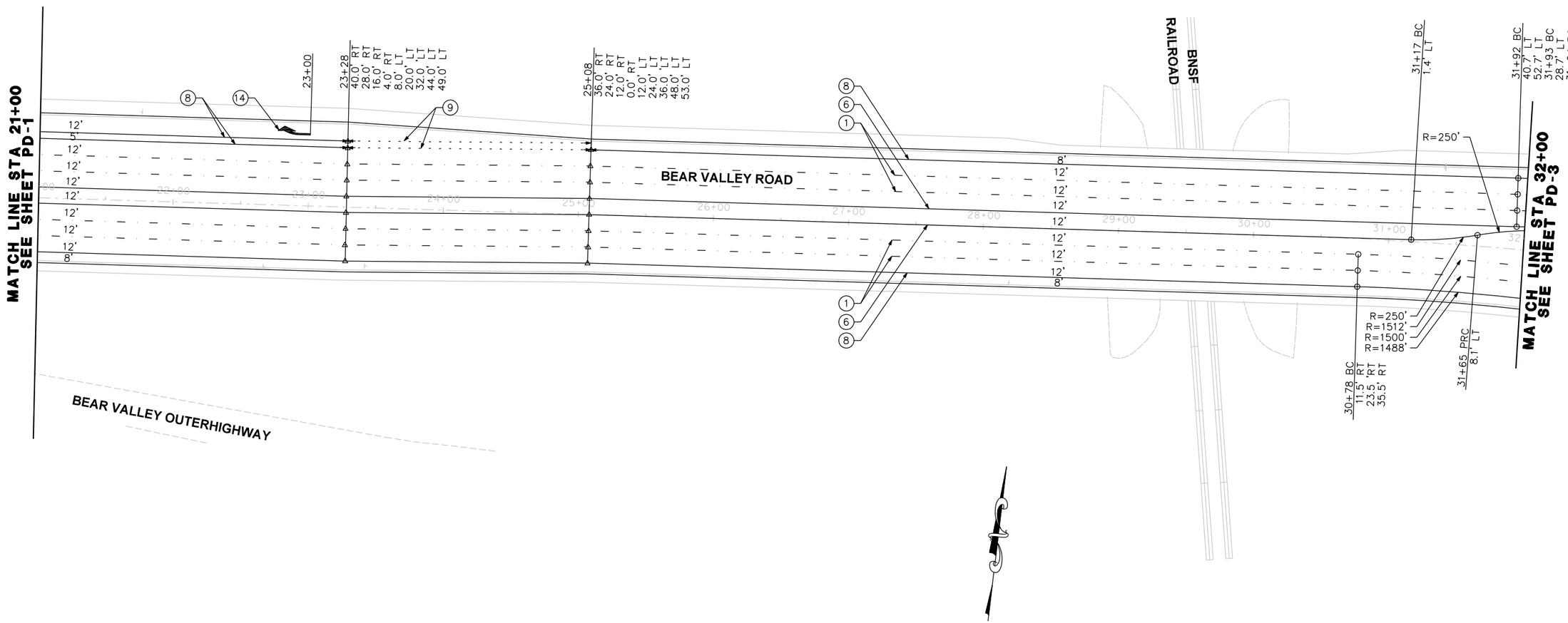

NO.	REVISION	BY	DATE

APPROVED BY: CITY ENGINEER _____ BRIAN GENGLER DATE: _____ R.C.E. EXP. 03-31-16

DESIGNED: KRIS KOFOED

DRAWN: BRYAN FRASER

CHECKED: JUANN RAMOS

RECORD DRAWING DATE:

SCALE: HORIZ: 1" = 40' VERT: N/A

PROJECT NO. XXXXX
CAD FILE: ...\5111\2007_na02.dgn

CITY OF VICTORVILLE
ENGINEERING DIVISION
14343 CIVIC DRIVE,
VICTORVILLE, CA 92392
(760) 955-5158

DOKKEN ENGINEERING
110 BLUE RAVINE ROAD SUITE 200, FOLSOM CA. 916-858-0642

JUANN RAMOS, PROJECT ENGINEER _____ DATE _____

REGISTERED PROFESSIONAL ENGINEER JUANN RAMOS No. 61931 Exp. 09/30/19 CIVIL STATE OF CALIFORNIA

BEAR VALLEY ROAD OH AT BNSF RAILROAD

STRIPING PLAN

PD-2

DWG. NO.

NOTES:

1. FOR STRIPING NOTES AND LEGEND, SEE PD-1

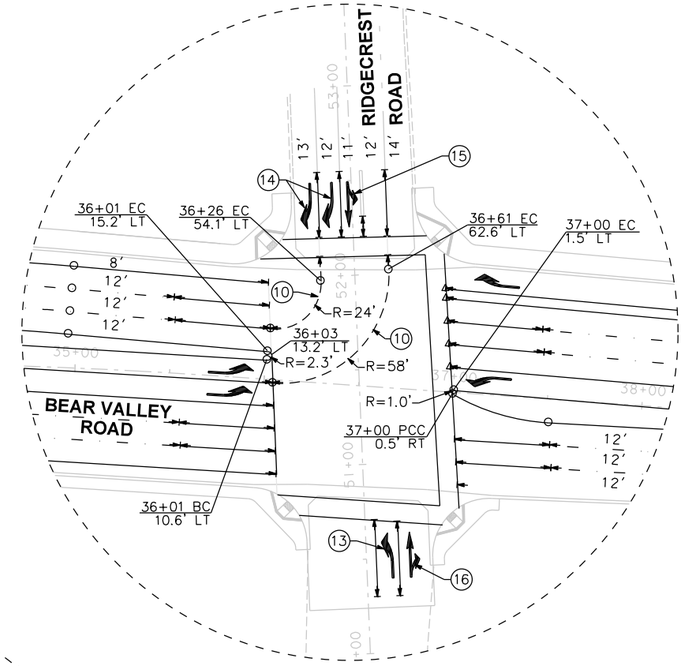

DETAIL A

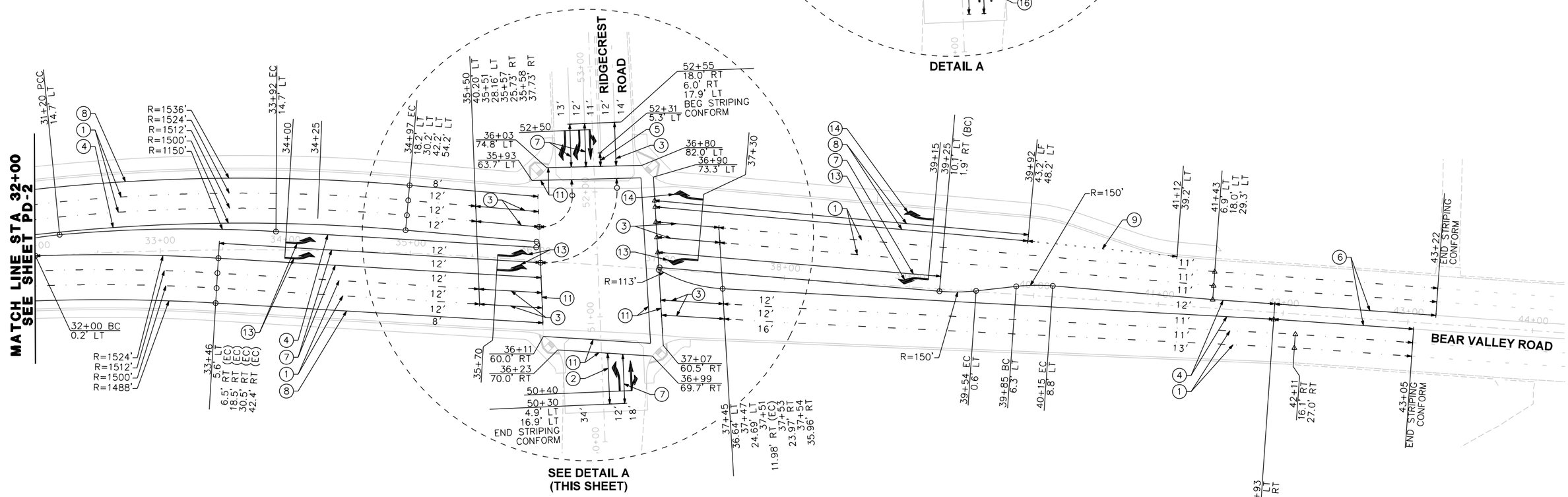

NO.	REVISION	BY	DATE

APPROVED BY: CITY ENGINEER — BRIAN GENGLER — DATE: — R.C.E. EXP. 03-31-16

DESIGNED: KRIS KOFOED

DRAWN: BRYAN FRASER

CHECKED: JUANN RAMOS

RECORD DRAWING DATE:

SCALE — HORIZ: 1" = 40' — VERT: N/A

PROJECT NO. XXXXX
CAD FILE: ...\5112007_na03.dgn

CITY OF VICTORVILLE
ENGINEERING DIVISION
14343 CIVIC DRIVE,
VICTORVILLE, CA 92392
(760) 955-5158

DOKKEN ENGINEERING
110 BLUE RAVINE ROAD SUITE 200, FOLSOM CA. 916-858-0642

JUANN RAMOS, PROJECT ENGINEER — DATE

REGISTERED PROFESSIONAL ENGINEER — JUANN RAMOS — No. 61931 — Exp. 09/30/19 — CIVIL — STATE OF CALIFORNIA

BEAR VALLEY ROAD OH AT BNSF RAILROAD

STRIPING PLAN

PD-3

DWG. NO.

SIGNING GENERAL NOTES:

1. ALL SIGNING SHALL BE IN CONFORMANCE WITH CALIFORNIA MUTCD LATEST EDITION, CALTRANS STANDARD PLANS AND SPECIFICATIONS LATEST EDITION, THE CITY OF VICTORVILLE ENGINEERING DEPARTMENT, AND SPECIAL PROVISIONS OF THIS PROJECT.
2. ALL SIGNS SHALL BE STANDARD SIZE UNLESS OTHERWISE NOTED ON THE PLAN. THE EXACT LOCATION OF ALL SIGNS SHALL BE DETERMINED IN THE FIELD BY THE ENGINEER.
3. DEBRIS FROM REMOVAL OPERATIONS SHALL BE CONTAINED WITHIN THE WORK AREA AND THE CONTRACTOR SHALL TAKE ALL PRECAUTIONS NECESSARY TO PROTECT PERSONS AND PROPERTY.
4. ALL SIGNS SHALL BE STANDARD SIZE UNLESS OTHERWISE NOTED ON THE PLANS. SALVAGED SIGNS SHALL BE DELIVERED TO THE NEAREST CITY MAINTENANCE YARD, OR AS DIRECTED BY THE ENGINEER.
5. ALL REQUIRED SIGNAGE SHALL BE PROVIDED AND INSTALLED BY THE CONTRACTOR IN ACCORDANCE WITH THE SIGNING DETAILS SHOWN ON THE SIGN PLAN AND SIGN DETAIL SHEETS.
6. ALL SIGNS LOCATED ON PRIVATE PROPERTY TO REMAIN IN PLACE UNLESS OTHERWISE NOTED, OR AS DIRECTED BY THE ENGINEER.

LEGEND:

▲	EXISTING SIGN TO REMAIN
●	REMOVE ROADSIDE SIGN
■	RELOCATE ROADSIDE SIGN
◆	RECONSTRUCT MONUMENT SIGN
⬟	ROADSIDE SIGN(S)
	ROADSIDE SIGN LOCATION-SINGLE POST
	ROADSIDE SIGN LOCATION-TWO POSTS
	EXISTING ROADSIDE SIGN-ONE POST
	EXISTING ROADSIDE SIGN-TWO POSTS
(CA)	CALIFORNIA SIGN CODE
(Sht No.)	ROADSIDE SIGN NUMBER

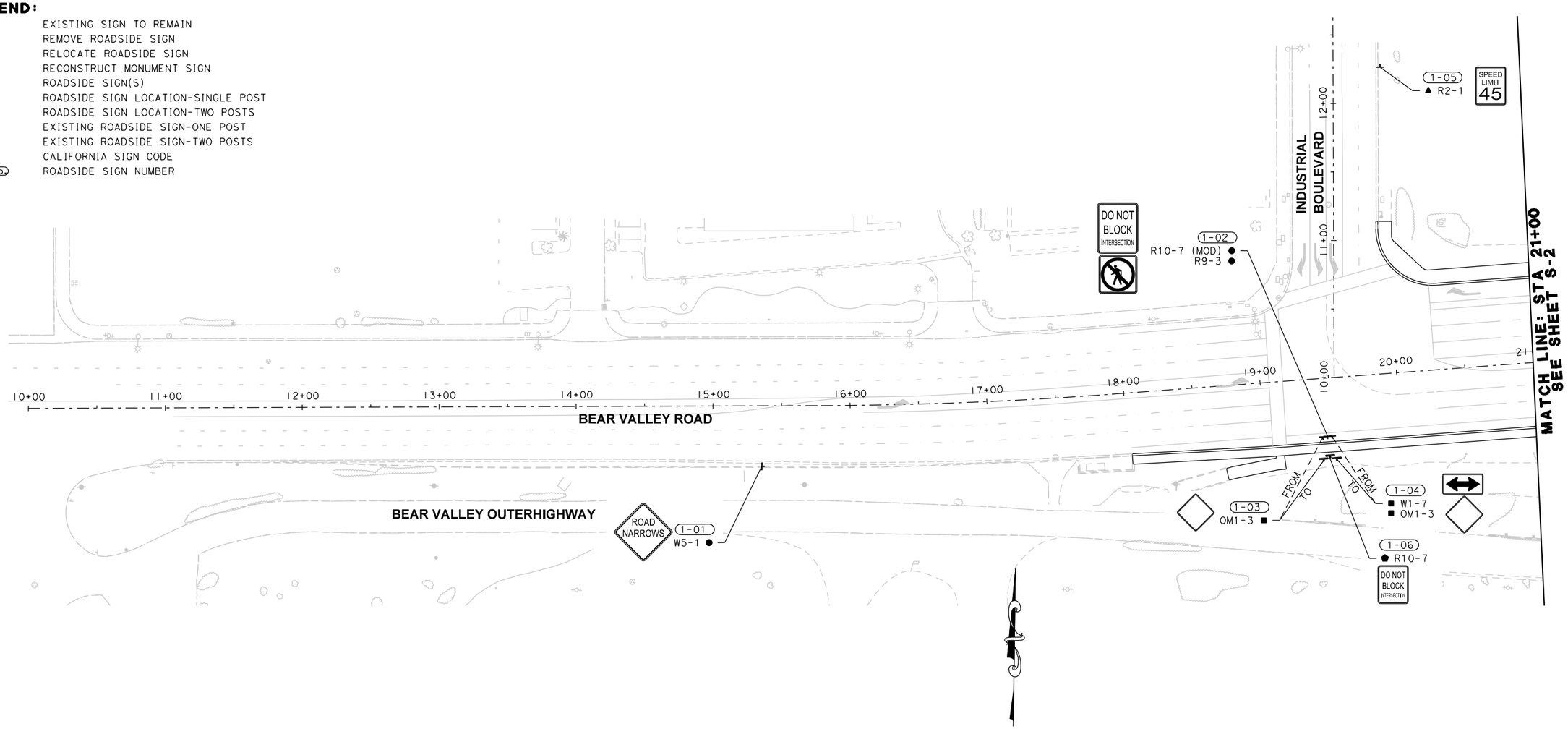

NO.	REVISION	BY	DATE

APPROVED BY: CITY ENGINEER — BRIAN GENGLER — DATE: — R.C.E. EXP. 03-31-16

DESIGNED: KRIS KOFOED
DRAWN: BRYAN FRASER
CHECKED: JUANN RAMOS

RECORD DRAWING DATE:
SCALE — HORIZ: 1" = 40' — VERT: N/A
PROJECT NO. XXXXX
CAD FILE: ...\511\2007_0001.dgn

CITY OF VICTORVILLE
ENGINEERING DIVISION
14343 CIVIC DRIVE,
VICTORVILLE, CA 92392
(760) 955-5158

DOKKEN ENGINEERING
110 BLUE RAVINE ROAD SUITE 200, FOLSOM CA. 916-858-0642

JUANN RAMOS, PROJECT ENGINEER — DATE

REGISTERED PROFESSIONAL ENGINEER — JUANN RAMOS — No. 61931 — Exp. 09/30/19 — CIVIL — STATE OF CALIFORNIA

BEAR VALLEY ROAD OH AT BNSF RAILROAD

SIGN PLAN

S-1

DWG. NO.

NOTES:

1. FOR SIGNING NOTES AND LEGEND SEE SHEET S-1.

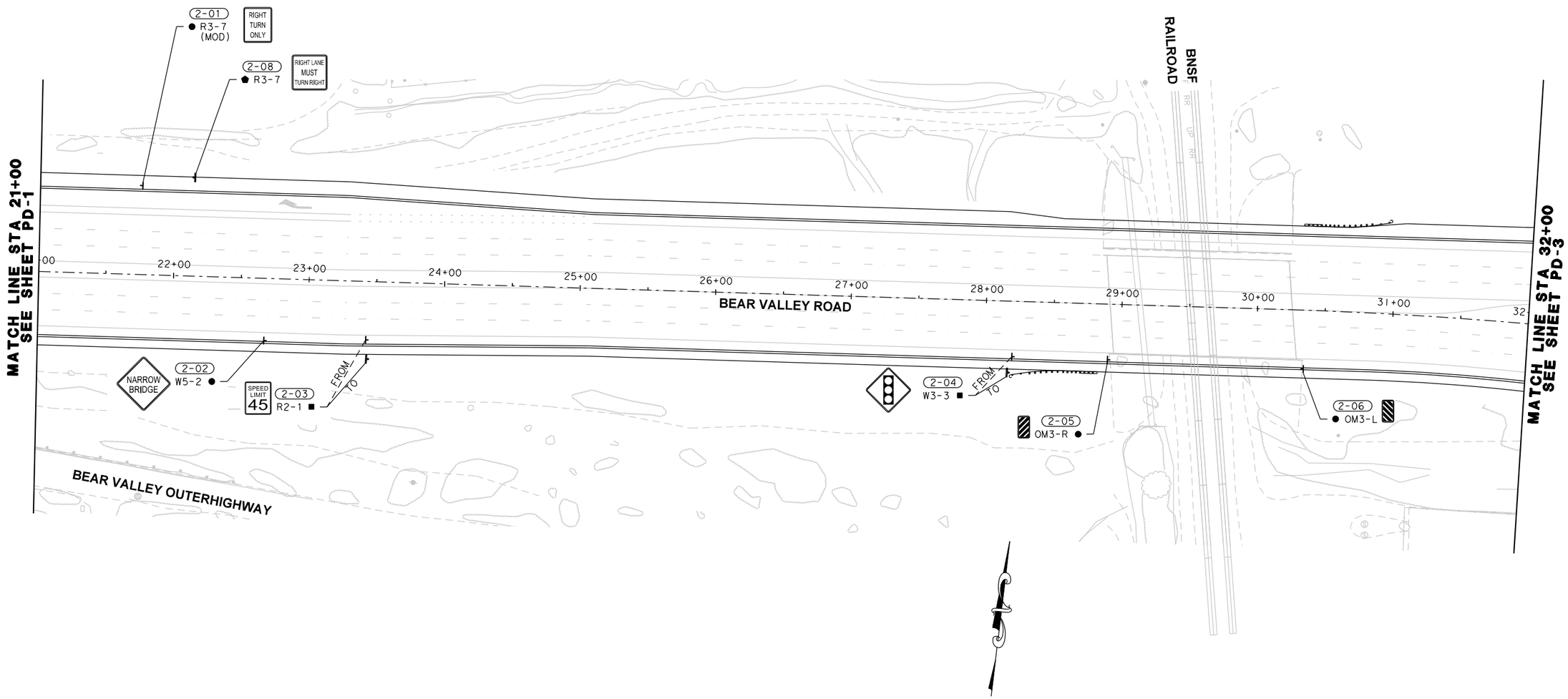

NO.	REVISION	BY	DATE

APPROVED BY: CITY ENGINEER _____ BRIAN GENGLER DATE: _____ R.C.E. EXP. 03-31-16

DESIGNED: KRIS KOFOED

DRAWN: BRYAN FRASER

CHECKED: JUANN RAMOS

RECORD DRAWING DATE:

SCALE: HORIZ: 1" = 40' VERT: N/A

PROJECT NO. XXXXX
CAD FILE: ...\S11\2007_oo02.dgn

CITY OF VICTORVILLE
ENGINEERING DIVISION
14343 CIVIC DRIVE,
VICTORVILLE, CA 92392
(760) 955-5158

DOKKEN ENGINEERING
110 BLUE RAVINE ROAD SUITE 200, FOLSOM CA. 916-858-0642

JUANN RAMOS, PROJECT ENGINEER _____ DATE

REGISTERED PROFESSIONAL ENGINEER JUANN RAMOS No. 61931 Exp. 09/30/19 CIVIL STATE OF CALIFORNIA

BEAR VALLEY ROAD OH AT BNSF RAILROAD

SIGNING PLAN

S-2

DWG. NO.

NOTES:

1. FOR SIGNING NOTES AND LEGEND SEE SHEET S-1.

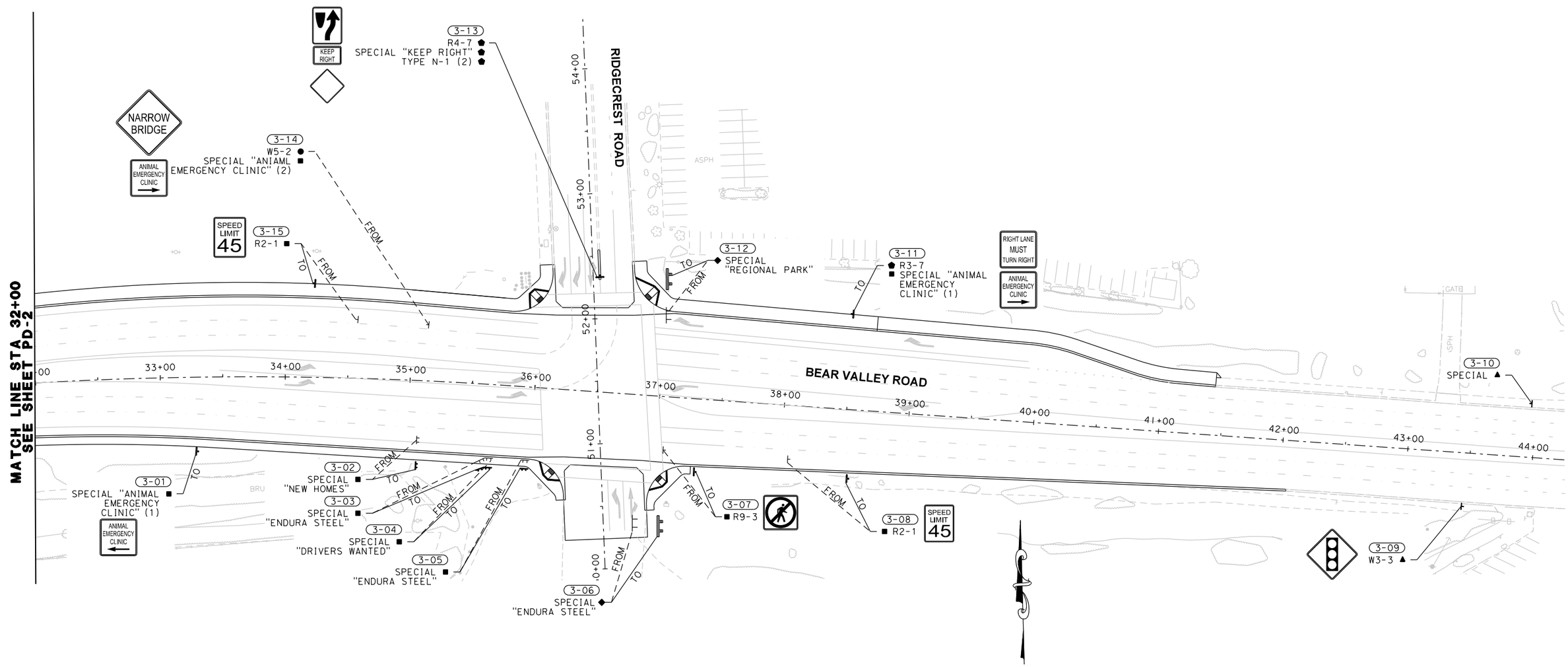

NO.	REVISION	BY	DATE

APPROVED BY: CITY ENGINEER BRIAN GENGLER DATE: R.C.E. EXP. 03-31-16

DESIGNED: KRIS KOFOED

DRAWN: BRYAN FRASER

CHECKED: JUANN RAMOS

RECORD DRAWING DATE:

SCALE HORIZ: 1" = 40' VERT: N/A

PROJECT NO. XXXXX
CAD FILE: ...\511\2007_oo03.dgn

CITY OF VICTORVILLE
ENGINEERING DIVISION
14343 CIVIC DRIVE,
VICTORVILLE, CA 92392
(760) 955-5158

DOKKEN ENGINEERING
110 BLUE RAVINE ROAD SUITE 200, FOLSOM CA. 916-858-0642

JUANN RAMOS, PROJECT ENGINEER DATE

REGISTERED PROFESSIONAL ENGINEER JUANN RAMOS No. 61931 Exp. 09/30/19 CIVIL STATE OF CALIFORNIA

BEAR VALLEY ROAD OH AT BNSF RAILROAD

SIGNING PLAN

48 OF 81

S-3

DWG. NO.

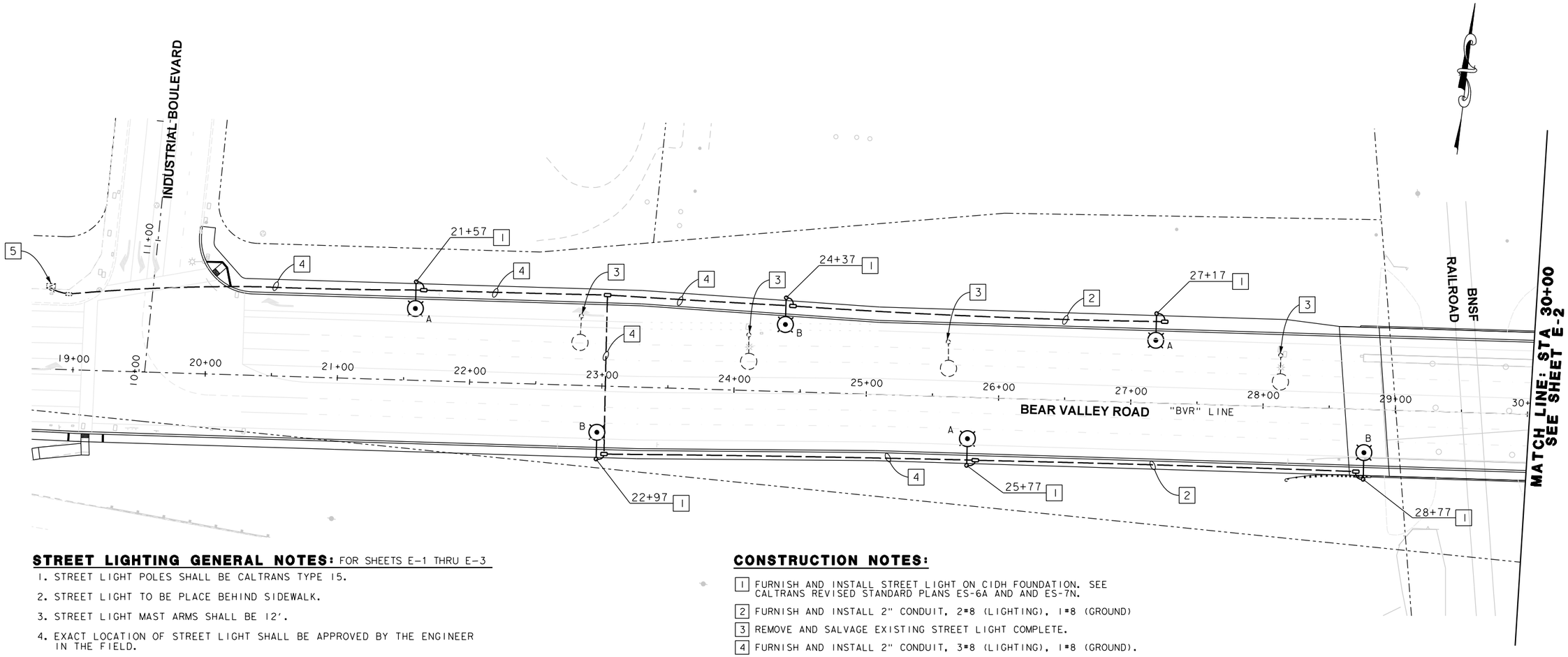

STREET LIGHTING GENERAL NOTES: FOR SHEETS E-1 THRU E-3

1. STREET LIGHT POLES SHALL BE CALTRANS TYPE 15.
2. STREET LIGHT TO BE PLACE BEHIND SIDEWALK.
3. STREET LIGHT MAST ARMS SHALL BE 12'.
4. EXACT LOCATION OF STREET LIGHT SHALL BE APPROVED BY THE ENGINEER IN THE FIELD.
5. ALL WORK SHALL CONFORM TO THE CITY OF VICTORVILLE STANDARD DRAWINGS AND CALTRANS 2015 STANDARD PLANS AND SPECIFICATIONS, AND THE SPECIAL PROVISIONS.
6. CONTRACTOR SHALL VERIFY ALL FIELD CONDITIONS BEFORE ORDERING ANY EQUIPMENT.
7. THE LOCATION OF CONDUITS AND PULL BOXES IS SCHEMATIC. LOCATION TO BE ADJUSTED TO FIT FIELD CONDITIONS AS DIRECTED BY THE ENGINEER.
8. SEE BRIDGE PLANS FOR EXACT LOCATION OF PENDANT SOFFIT LIGHTS.
9. CONTRACTOR SHALL COORDINATE WITH CITY OF VICTORVILLE TRAFFIC SIGNAL MAINTENANCE DIVISION.
10. ALL CIRCUITS AND ELECTRICAL SYSTEMS SHALL BE GROUNDED PER THE NEC AND THE CALTRANS STANDARD SPECIFICATIONS. THE GROUND CONDUCTOR SHALL MATCH THE LARGEST UNGROUNDED CONDUCTOR IN THE CONDUIT. A MINIMUM #8 CONDUCTOR SHALL BE USED.
11. ALL CONDUIT IN BRIDGE SHALL BE TYPE 1 CONDUIT.
12. SEE CALTRANS STD PLANS ES-1A, ES-1B, ES-1C FOR SYMBOLS AND ABBREVIATIONS.
13. CONTRACTOR TO USE BLACK AND RED #8 AWG FOR THE CURRENT CARRYING CONDUCTORS (HOT), WHITE FOR THE COMMON NEUTRAL, AND A #8 AWG FOR GROUND.
14. ALUMINUM CONDUCTORS WILL NOT BE ALLOWED.
15. ALL LUMINAIRES MUST HAVE A PHOTOCELL UNIT INSTALLED.

CONSTRUCTION NOTES:

1. FURNISH AND INSTALL STREET LIGHT ON CIDH FOUNDATION. SEE CALTRANS REVISED STANDARD PLANS ES-6A AND AND ES-7N.
2. FURNISH AND INSTALL 2" CONDUIT, 2#8 (LIGHTING), 1#8 (GROUND)
3. REMOVE AND SALVAGE EXISTING STREET LIGHT COMPLETE.
4. FURNISH AND INSTALL 2" CONDUIT, 3#8 (LIGHTING), 1#8 (GROUND).
5. EXISTING TYPE III ELECTRICAL SERVICE ENCLOSURE. ADD 2-30A, 1 POLE CIRCUIT BREAKERS FOR STREET LIGHTING. ADD 1- 120 V, 30 A, 2 POLE LIGHTING CONTACTOR.

LEGEND:

A — CIRCUIT DESIGNATION

CITY OF VICTORVILLE ELECTROLIER. (CALTRANS TYPE 15 POLE W/ CALTRANS ROADWAY TYPE 1 LED LUMINAIRE AND 12' LUMINAIRE ARM)

EXISTING SCE OWNED STREET LIGHT (HPS)

THIS PLAN IS APPROVED FOR STREET LIGHTING WORK ONLY.

NO.	REVISION	BY	DATE

APPROVED BY: CITY ENGINEER — BRIAN GENGLER — DATE: — R.C.E. EXP. 03-31-16

DESIGNED: KRIS KOFOED
DRAWN: BRYAN FRASER
CHECKED: JUANN RAMOS

RECORD DRAWING DATE:
SCALE — HORIZ: 1" = 40' — VERT: N/A
PROJECT NO. XXXXX
CAD FILE: ...\511\2007_ua01.dgn

CITY OF VICTORVILLE
ENGINEERING DIVISION
14343 CIVIC DRIVE,
VICTORVILLE, CA 92392
(760) 955-5158

DOKKEN ENGINEERING
110 BLUE RAVINE ROAD SUITE 200, FOLSOM CA. 916-858-0642

JUANN RAMOS, PROJECT ENGINEER — DATE

REGISTERED PROFESSIONAL ENGINEER — JUANN RAMOS — No. 61931 — Exp. 09/30/19 — CIVIL — STATE OF CALIFORNIA

BEAR VALLEY ROAD OH AT BNSF RAILROAD

STREET LIGHTING PLAN

E-1

DWG. NO.

NOTES:

1. SEE SHEET E-1 FOR STREET LIGHTING GENERAL NOTES AND LEGEND.

CONSTRUCTION NOTES:

1. FURNISH AND INSTALL STREET LIGHT ON CIDH FOUNDATION. SEE CALTRANS REVISED STANDARD PLANS ES-6A AND AND ES-7N.
2. FURNISH AND INSTALL 2" CONDUIT, 2#8 (LIGHTING), 1#8 (GROUND)
3. REMOVE AND SALVAGE EXISTING STREET LIGHT COMPLETE.
4. FURNISH AND INSTALL 2" CONDUIT, 3#8 (LIGHTING), 1#8 (GROUND).
5. NEW TYPE III ELECTRICAL SERVICE ENCLOSURE - SEE TRAFFIC SIGNAL PLANS. ADD 2-30A, 1 POLE CIRCUIT BREAKERS FOR STREET LIGHTING, 1-15 A, 1 POLE CIRCUIT BREAKER FOR BRIDGE SOFFIT LIGHTING. ADD 1- 120 V, 60 A, 4 POLE LIGHTING CONTACTOR. PROVIDE CALTRANS TYPE V PHOTOELECTRIC CONTROL IN PEDESTAL FOR SOFFIT LIGHTING.
6. FURNISH AND INSTALL 2" CONDUIT, 3#8 (LIGHTING), 2#8 (BRIDGE SOFFIT LIGHTING), 1#8 (GROUND).
7. FURNISH AND INSTALL 2" CONDUIT, 2#8 (LIGHTING), 2#8 (BRIDGE SOFFIT LIGHTING), 1#8 (GROUND).
8. FURNISH AND INSTALL 2" CONDUIT, 2#8 (BRIDGE SOFFIT LIGHTING), 1#8 (GROUND). SEE SHEET E-3 FOR CONTINUATION.

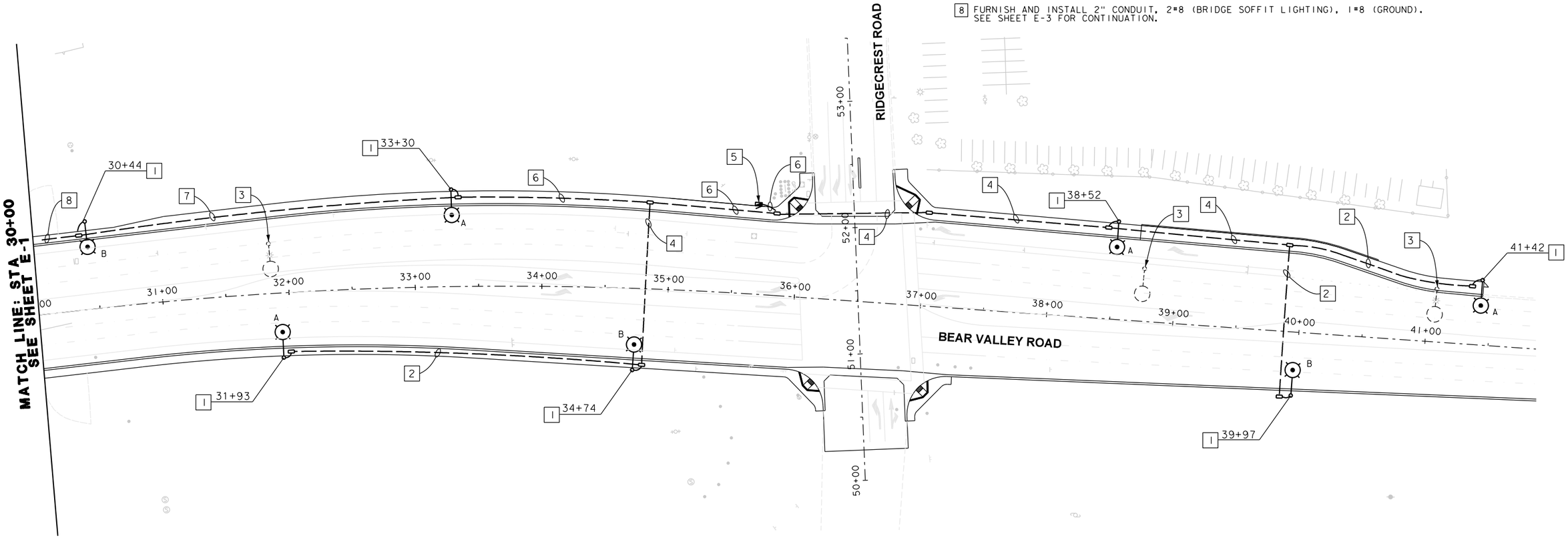

THIS PLAN IS ACCURATE FOR STREET LIGHTING WORK ONLY.

NO.	REVISION	BY	DATE

APPROVED BY: CITY ENGINEER BRIAN GENGLER DATE: R.C.E. EXP. 03-31-16

DESIGNED: KRIS KOFOED
DRAWN: BRYAN FRASER
CHECKED: JUANN RAMOS

RECORD DRAWING DATE:
SCALE HORIZ: 1" = 40' VERT: N/A
PROJECT NO. XXXXX
CAD FILE: ...\5111\2007_ua002.dgn

CITY OF VICTORVILLE
ENGINEERING DIVISION
14343 CIVIC DRIVE,
VICTORVILLE, CA 92392
(760) 955-5158

DOKKEN ENGINEERING
110 BLUE RAVINE ROAD SUITE 200, FOLSOM CA. 916-858-0642
JUANN RAMOS, PROJECT ENGINEER DATE

REGISTERED PROFESSIONAL ENGINEER JUANN RAMOS No. 61931 Exp. 09/30/19 CIVIL STATE OF CALIFORNIA

BEAR VALLEY ROAD OH AT BNSF RAILROAD

STREET LIGHTING PLAN

E-2

DWG. NO.

LEGEND:

CREE EDGE SERIES PENDANT MOUNT LED LUMINAIRE (SOFFIT LIGHTING)
CAT# CAN-EDG-3M-PM-10-UL-SV-52S-40K

CONSTRUCTION NOTES:

1. FURNISH AND INSTALL CREE LED PENDANT LIGHT. SEE CALTRANS STANDARD PLAN ES-9E FOR DETAILS.
2. FURNISH AND INSTALL 1" CONDUIT, 2#10 (LIGHTING), 1#8 (GROUND).
3. FURNISH AND INSTALL 2" CONDUIT, 2#10 (LIGHTING), 1#8 (GROUND).
4. SEE SHEET E-2 FOR CONTINUATION.

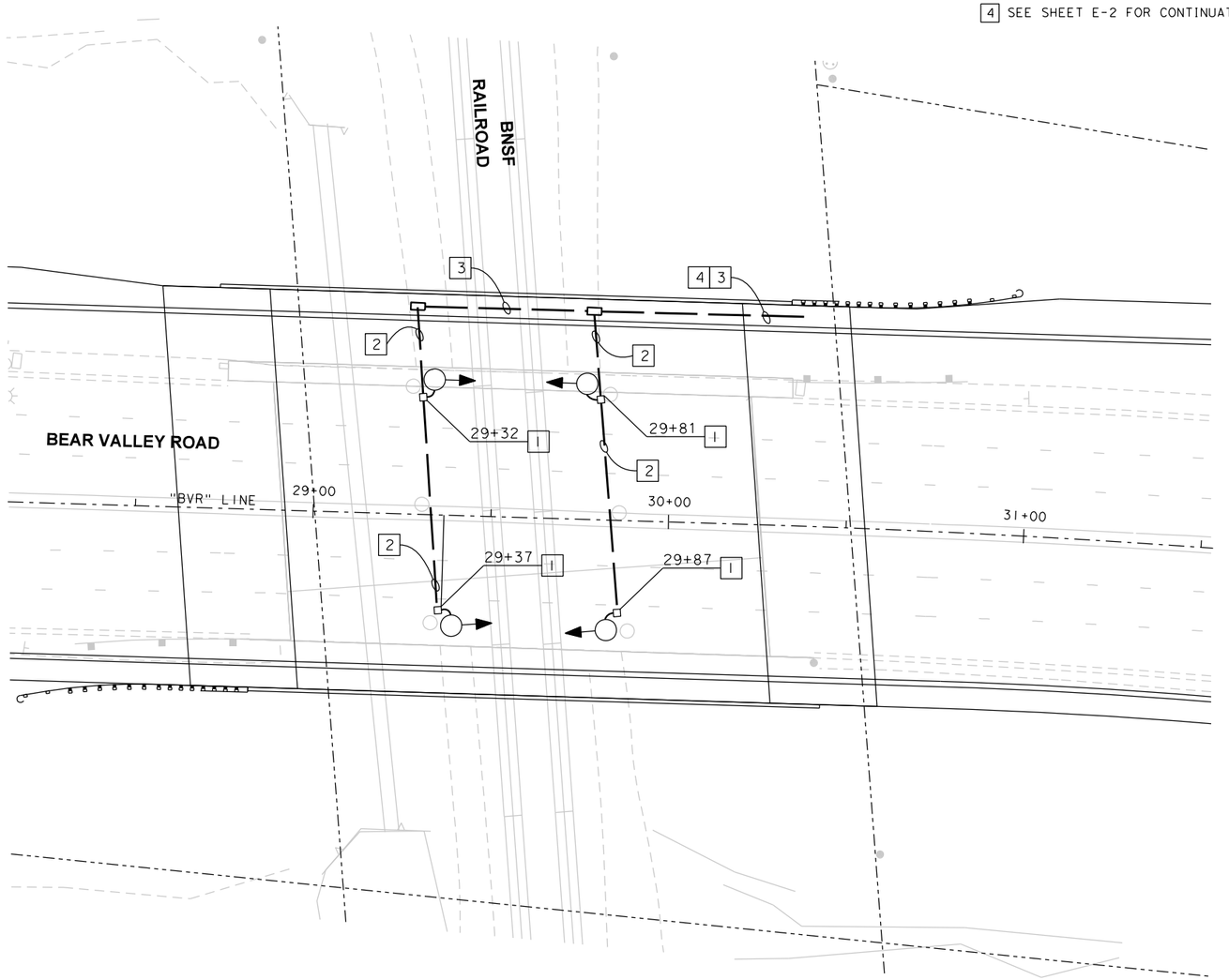

THIS PLAN IS APPROVED FOR STREET LIGHTING WORK ONLY.

NO.	REVISION	BY	DATE

APPROVED BY: CITY ENGINEER _____ BRIAN GENGLER DATE: _____ R.C.E. EXP. 03-31-16

DESIGNED: KRIS KOFOED
DRAWN: BRYAN FRASER
CHECKED: JUANN RAMOS

RECORD DRAWING DATE:
SCALE HORIZ: 1" = 20' VERT: N/A
PROJECT NO. XXXXX
CAD FILE: ...\511\2007_ua03.dgn

CITY OF VICTORVILLE
ENGINEERING DIVISION
14343 CIVIC DRIVE,
VICTORVILLE, CA 92392
(760) 955-5158

DOKKEN ENGINEERING
110 BLUE RAVINE ROAD SUITE 200, FOLSOM CA. 916-858-0642

JUANN RAMOS, PROJECT ENGINEER _____ DATE

REGISTERED PROFESSIONAL ENGINEER JUANN RAMOS No. 61931 Exp. 09/30/19 CIVIL STATE OF CALIFORNIA

BEAR VALLEY ROAD OH AT BNSF RAILROAD

RAILROAD UNDERCROSSING LIGHTING PLAN

E-3

DWG. NO.

TRAFFIC SIGNAL MODIFICATION PLAN
FOR
BEAR VALLEY ROAD AND RIDGECREST ROAD
BEAR VALLEY ROAD AND INDUSTRIAL BOULEVARD

TRAFFIC SIGNAL GENERAL NOTES:

1. ALL WORK AND MATERIALS SHALL CONFORM TO CALIFORNIA MANUAL ON UNIFORM TRAFFIC CONTROL DEVICES (CA MUTCD) 2014, CALTRANS STANDARD PLANS DATED 2015, 2015 CALTRANS STANDARD SPECIFICATIONS, THE VICTORVILLE 2017 SPECIAL PROVISIONS FOR TRAFFIC SIGNAL CONTROLLER UNITS, CABINETS, AND AUXILIARY EQUIPMENT, AND THE SPECIAL PROVISIONS OF THIS PROJECT.
2. THE EXACT LOCATION OF SIGNAL STANDARDS AND APPURTENANCES SHALL BE APPROVED IN THE FIELD BY THE ENGINEER.
3. PULL BOX ADJACENT TO THE CONTROLLER SHALL BE NO.6E, ALL OTHER PULL BOXES SHALL BE NO.6 EXCEPT WHERE SHOWN OTHERWISE OR APPROVED BY THE ENGINEER.
4. TRAFFIC SIGNAL CONDUIT SHALL BE TYPE 3, NON-METALLIC CONDUIT, SCHEDULE 80 PVC EXCEPT FOR 2" CONDUIT INSTALLED WITHIN CONCRETE STRUCTURES (FOUNDATIONS) AND THE 2" CONDUIT RUN BETWEEN A STRUCTURE AND THE NEAREST PULL BOX SHALL BE TYPE 1, RIGID HOT-DIP GALVANIZED STEEL CONDUIT. MINIMUM CONDUIT DIAMETER ACROSS ROADWAY SHALL BE 4" MINIMUM, ALL OTHER CONDUITS SHALL BE 2", UNLESS OTHERWISE SHOWN OR APPROVED BY THE ENGINEER.
5. ALL SIGNAL HEADS SHALL BE METAL TYPE, PROVIDED WITH METAL LOUVERED BACK PLATES AND METAL VISORS. ALL VEHICULAR INDICATIONS SHALL BE 12" G.E. L.E.D. LEFT TURN HEADS SHALL BE RED, YELLOW & GREEN ARROWS. THE CONTRACTOR SHALL FURNISH ONE SPARE 12' G.E. L.E.D. UNIT OF EACH COLOR AND TYPE OF SIGNAL INDICATION SHOWN ON THIS SHEET.
6. PEDESTRIAN SIGNAL INDICATIONS SHALL BE GT1 L.E.D. COUNTDOWN PEDESTRIAN SIGNALS. THE CONTRACTOR SHALL FURNISH ONE SPARE G.E. L.E.D PEDESTRIAN SIGNAL HEAD UNIT.
7. THE ACCESSIBLE PEDESTRIAN SIGNAL SYSTEM SHALL BE NAVIGATOR SYSTEM BY POLARA ENGINEERING OR PRE-APPROVED EQUAL.
8. ALL CONDUITS SHALL BE PLACED UNDER EXISTING PAVEMENT BY "JACKING OR DRILLING" UNLESS OTHERWISE DIRECTED BY THE ENGINEER.
9. THE CONTRACTOR SHALL FURNISH AND INSTALL CONDUCTORS AND CABLES AS NEEDED TO PROVIDE THE INTENDED SIGNAL OPERATION INCLUDING RADIO ANTENNA CABLE, - VIDEO CABLES, OPTICOM CABLES AND SIGNAL LIGHTING SERVICE WIRES.
10. THE CONTRACTOR SHALL NOTIFY THE CITY OF VICTORVILLE ENGINEERING DEPARTMENT, (760) 955-5158, AT LEAST 48 HOURS PRIOR TO SIGNAL TURN-ON. SIGNAL TURN ON SHALL BE A MINIMUM OF 48 HOURS PRIOR TO ANY CITY HALL CLOSURE DATE.
11. VIDEO DETECTION CAMERA POWER AND VIDEO CABLES SHALL BE CONNECTED WITHIN THE CONTROLLER CABINET TO A DESIGNATED PANEL TO PROVIDE FUSE PROTECTION, COAX TERMINATION AND LIGHTING SURGE PROTECTION.
12. INTERNALLY ILLUMINATED STREET NAME SIGN SHALL BE L.E.D. TYPE "A". PANEL LEGENDS AND INSTALLATION SHALL BE PER THE CITY OF VICTORVILLE STANDARDS.
13. FACTORY AUTHORIZED TECHNICAL SUPPORT SHALL BE PROVIDED FOR TURN ON OF ALL EQUIPMENT.
14. CONTRACTOR SHALL MAINTAIN NORMAL SIGNAL OPERATIONS BETWEEN THE HOURS OF 5AM AND 10PM AND SHALL NOTIFY THE CITY OF VICTORVILLE ENGINEERING DEPARTMENT, (760) 955-5158, AT LEAST 48 HRS PRIOR TO PLACING ANY SIGNAL INTO FLASH.

VICTORVILLE CONSTRUCTION NOTES:

- CC CONNECT NEW AND EXISTING CONDUIT. REMOVE EXISTING CONDUCTORS AND INSTALL NEW CONDUCTORS AS INDICATED.
- RC EQUIPMENT OR MATERIAL TO BE REMOVED AND BECOME THE PROPERTY OF THE CONTRACTOR.
- AB ABANDON. IF APPLIED TO CONDUIT, REMOVE CONDUCTORS.
- BC INSTALL PULL BOX IN EXISTING CONDUIT RUN.
- RS REMOVE AND SALVAGE EQUIPMENT.
- RR REMOVE AND REUSE EQUIPMENT.
- IS INSTALL SIGN ON MAST ARM.
- CB INSTALL CONDUIT INTO EXISTING PULL BOX.

LEGEND

- VIDEO DETECTION CAMERA
- PROPOSED VEHICLE DETECTION ZONE
- PROPOSED BICYCLE DETECTION ZONE
- PROPOSED VEHICLE SIGNAL HEAD
- PROPOSED PEDESTRIAN SIGNAL HEAD
- CONTROLLER ASSEMBLY
- SIGNAL AND/OR LIGHTING SERVICE
- PROPOSED PULLBOX

TRAFFIC SIGNAL CONSTRUCTION NOTES:

1. PROVIDE AND INSTALL FOUNDATION AND NEW "R" CABINET AND CONTROLLER EQUIPMENT PER "CITY OF VICTORVILLE SPECIAL PROVISIONS FOR TRAFFIC SIGNAL CONTROLLER UNITS, CABINETS AND AUXILIARY EQUIPMENT DATED JANUARY 3, 2017" ALSO TABLE E-1 AND E-2 OF THE SPECIAL PROVISIONS. REMOVE AND SALVAGE EXISTING CABINET AND AUXILIARY EQUIPMENT. COMPLETELY REMOVE FOUNDATION TO THE SATISFACTION OF THE ENGINEER.

   NOTE: CONTRACTOR TO PROVIDE ALL CABLES AND BRACKETS, FOUNDATIONS, REINFORCING STEEL CAGES, ANCHOR BOLTS, INDICATIONS AND HARDWARE TO INSTALL ALL EQUIPMENT.

2. RETAIN AND PROTECT EXISTING ELECTRICAL SERVICE.

2a. REMOVE AND SALVAGE EXISTING SERVICE EQUIPMENT ENCLOSURE AND ALL APPURTENANCES.

2b. FURNISH AND INSTALL TYPE III-BF 120V/240V SINGLE METER SERVICE EQUIPMENT ENCLOSURE WITH TYPE V PEC UNIT. THE CONTRACTOR SHALL PROVIDE FOR ALL REQUIRED ELECTRICAL SERVICE HOOK-UPS.

3. FURNISH AND INSTALL 3" SCHEDULE 40 PVC CONDUIT WITH PULL ROPE (#5 P.B.) PER S.C.E. REQUIREMENTS.

4. RELOCATE EXISTING GTT OPTICOM DETECTOR, FURNISH AND INSTALL COMPATIBLE GTT DETECTOR CABLE SEE DETAIL "B".

5. PROVIDE AND INSTALL ITERIS VANTAGE VECTOR DETECTION SYSTEM ONTO LUMINAIRE MAST ARM. CONTRACTOR IS REQUIRED TO PROVIDE ALL NECESSARY BRACKETS, CABLING AND INSTALLATION FOR PROPER OPERATION AND MAINTENANCE OF VIDEO DETECTION SYSTEM.

6. INSTALL 3" CONDUIT, LOCATING #12 COPPER WIRE AND 48 STRAND SMFO CABLE WITH FIBER PULL BOXES AT A MAXIMUM SPACING OF 480'. INSTALL A FIBER SPLICE VAULT ADJACENT TO THE CONTROLLER CABINET.

7. INSTALL I.I.S.N.S ON SEPARATE MAST ARM PER THE CITY OF VICTORVILLE SPECIAL PROVISIONS. SEE DETAILS ON SHEET 4.

8. RELOCATE EXISTING COMMUNICATIONS EQUIPMENT. CONTRACTOR REQUIRED TO PROVIDE CABLES, BRACKETS, AND NECESSARY ACCESSORIES FOR RELOCATED INSTALLATION.

9. INSTALL FIBER SPLICE VAULT PER CITY OF VICTORVILLE SPECIAL PROVISIONS.

10. INSTALL 2" CONDUIT, PULL BOXES AND CONDUCTORS FOR STREET LIGHT OPERATIONS.

11. INSTALL 2" CONDUIT WITH 3-#8 (SIGNAL SERVICE, GFCI, GROUND).

12. INSTALL 2" CONDUIT WITH 2-#10 (LUMINAIRES) AND 2#12 (I.I.S.N.S.).

13. REMOVE AND SALVAGE EXISTING TYPE 26-4-80 POLE, SIGNAL MAST ARM, VEHICLE AND PEDESTRIAN SIGNAL HEADS, PEDESTRIAN PUSH BUTTON, LUMINAIRE, AND LUMINAIRE MAST ARM AS APPLICABLE. RELOCATE OR REMOVE ALL SIGNAGE AS NOTED ON THE PLAN. COMPLETELY REMOVE FOUNDATION TO THE SATISFACTION OF THE ENGINEER.

14. REMOVE AND SALVAGE EXISTING TYPE 1-A POLE, VEHICLE AND PEDESTRIAN SIGNAL HEADS, AND PEDESTRIAN PUSH BUTTON AS APPLICABLE. RELOCATE OR REMOVE ALL SIGNAGE AS NOTED ON THE PLAN. COMPLETELY REMOVE FOUNDATION TO THE SATISFACTION OF THE ENGINEER.

15. REMOVE AND SALVAGE EXISTING TYPE PPB POST. COMPLETELY REMOVE FOUNDATION TO THE SATISFACTION OF THE ENGINEER.

16. FURNISH AND INSTALL POLE MOUNTED SIGN AS SHOWN.

17. RETAIN AND PROTECT EXISTING 2" CONDUIT WITH 2-#10 (LUMINAIRE) AND 2-#12 (I.I.S.N.S.).

18. REMOVE AND SALVAGE EXISTING TYPE 15TS. COMPLETELY REMOVE FOUNDATION TO THE SATISFACTION OF THE ENGINEER.

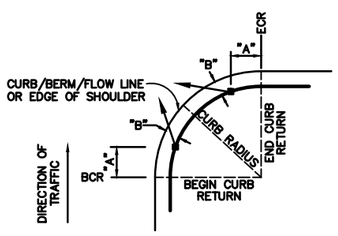

NOTE: FOR "A" AND "B" DIMENSIONS, SEE POLE SCHEDULE OR AS DIRECTED BY ENGINEER

(TYPICAL SIGNAL POLE PLACEMENT, UNLESS SHOWN ON PLANS)

SIGNAL STANDARD PLACEMENT DIMENSIONS AND EQUIPMENT LOCATIONS

DETAIL "A"

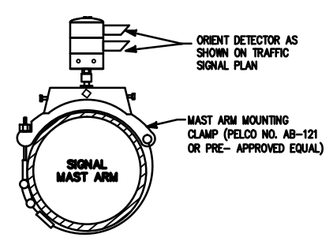

EMERGENCY VEHICLE PRE-EMPTION DETECTOR ASSEMBLY

DETAIL "B"

NO SCALE

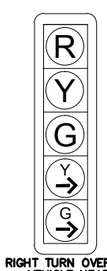

RIGHT TURN OVERLAP VEHICLE HEAD

DETAIL "C"

NO SCALE

100% PLANS

NO.	REVISION	BY	DATE

APPROVED BY: DEPUTY DIRECTOR MAZIN KASEY DATE: _____ R.C.E. 53328 EXP. 06-30-17

APPROVED BY: CITY ENGINEER BRIAN GENGLER DATE: _____ R.C.E. 44730 EXP. 03-31-18

DESIGNED: ROBERT KILPATRICK

DRAWN: JERREMY CLARK

CHECKED: MINH PHAN

RECORD DRAWING DATE:

SCALE HORIZ: 1"=20' VERT: 1"=8'

PROJECT NO. XXXXX
CAD FILE: $FILEABBREV$

CITY OF VICTORVILLE
ENGINEERING DIVISION
14343 CIVIC DRIVE,
VICTORVILLE, CA 92392
(760) 955-5158

DAVID EVANS AND ASSOCIATES INC.
14297 CAJON AVENUE, SUITE 101
VICTORVILLE, CA 92392
Phone: 760.524.9101

DATE

REGISTERED PROFESSIONAL ENGINEER ROBERT A. KILPATRICK No. C42386 CIVIL STATE OF CALIFORNIA

BEAR VALLEY ROAD AT BNSF RAILROAD

TRAFFIC SIGNAL PLAN

GENERAL NOTES, CONSTRUCTION NOTES, AND LEGEND

TSP-1

DWG. NO.

Plot Date: 09/12/2017 2:38:57 PM User: Acty File Name: V:\130149\Eng\130149-000\Final Plots\03_130149ts1-CV.dwg Last Update: 9/12/2017 2:38:02 PM

CABLE, CONDUCTOR, AND CONDUIT SCHEDULE

AWG OR CABLE		RUNS 1	2	3	4	5	6	7	8
12 CONDUCTOR	(A) ø1,ø6,ø6P	1/0	1/0	–	–	–	–	–	–
	(B) ø4,OLA,ø8	2/0	–	–	–	–	–	–	–
	(C) ø8,ø8P	1/0	–	–	–	–	–	1/0	–
	(D) ø5,ø6,ø6P	1/0	–	–	–	–	–	1/0	1/0
	(E) ø2,ø5,ø2P	1/0	1/0	1/0	1/0	1/0	1/0	–	–
	(F) ø4,ø8,ø8P	1/0	1/0	1/0	1/0	1/0	–	–	–
	(G) ø4,OLA	1/0	1/0	1/0	1/0	–	–	–	–
	(H) ø1,ø2,ø2P	1/0	1/0	1/0	–	–	–	–	–
3 CABLE	(I) ø6PPB	0/1	–	–	–	–	–	–	–
	(J) ø6PPB	0/1	–	–	–	–	–	0/1	–
	(K) ø8PPB	0/1	–	–	–	–	–	0/1	–
	(L) ø8PPB	0/1	0/1	0/1	0/1	0/1	–	–	–
	(M) ø2PPB	0/1	0/1	0/1	0/1	0/1	–	–	–
	(N) ø2PPB	0/1	0/1	0/1	–	–	–	–	–
	TOTALS	9/6	5/3	4/3	3/2	2/2	1/1	2/2	1/0
#14–3 AWG	SPARE	1	1	1	1	1	1	1	1
#12–2 AWG	I.I.S.N.S.	1	1	1	1	1	1	1	1
#10–2 AWG	LUMINAIRES	1	1	1	1	1	1	1	1
#8 AWG	BARE GROUND	1	1	1	1	1	1	1	1
VIDEO POWER CABLES		4	3	2	2	1	1	1	–
VIDEO DETECTION CALBES		4	3	2	2	1	1	1	–
** OPTICOM M138 CABLE		3	3	2	2	1	1	1	–
CAT6 WIRELESS ETHERNET RADIO CABLE		5	4	2	2	1	1	1	–
CONDUIT SIZE		2–4"	2–4"	4"	4"	4"	3"	4"	3"

– SIGNAL CABLE (3 AND 12 CONDUCTOR) SHALL NOT BE SPLICED. RUN CABLE UP TO THE HANDHOLE AT EACH SIGNAL STANDARD. STRIP THE CABLE AT THIS POINT AND THE SIGNAL HEAD. THE OTHER UNUSED CONDUCTORS SHALL HAVE THE ENDS INSULATED AT THE HANDHOLE.

– ALL CONDUCTORS ARE NEW UNLESS OTHERWISE INDICATED.

PHASE DIAGRAM

	GROUP A		GROUP B	
RING 1	PHASE 1	PHASE 2	PHASE 3	PHASE 4
RING 2	PHASE 5	PHASE 6	PHASE 7	PHASE 8

NOT USED

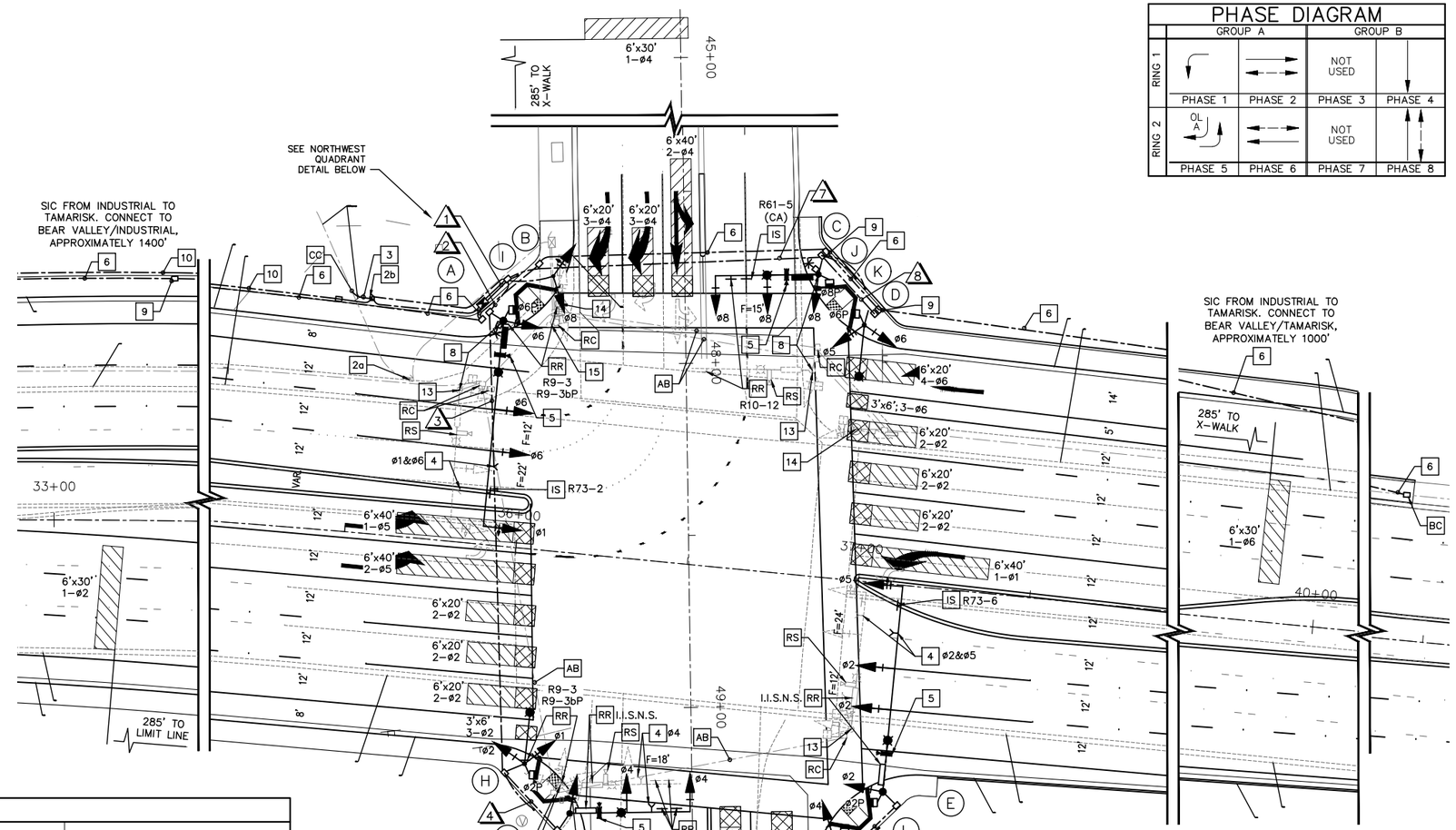

POLE AND EQUIPMENT SCHEDULE

No.	POLE DATA TYPE	HGT.	SIGMA	LUMINAIRE M.A.	LED	SIGNAL MOUNTING MAST ARM	POLE	PED.	PED PUSH BTN PHASE	QUAD.	POLE LOCATION* A	B	I.I.S.N.S. LEGEND	REMARKS
(A)	61A–5–100	35'	60'	15'	ROADWAY 2	3–MAS	SV–1–T	SP–1–T	–	–	12'	3'	Ridgecrest Rd	RR R9–3,R9–3bP IS R73–2(CA) 4 5 7 8
(B)	1–A	10'	–	–	–	–	TV–2–T	–	–	–	13'	3'	–	
(C)	19–4–100	30'	30'	15'	ROADWAY 1	2–MAS	SV–1–T	SP–1–T	–	–	12'	3'	Bear Valley Rd	RR R10–12 IS R61–5(CA) 5 7 8
(D)	15TS	30'	–	15'	ROADWAY 1	–	SV–2–TA	SP–1–T	–	–	13'	3'	–	
(E)	61–5–100	30'	60'	15'	ROADWAY 1	3–MAS	SV–1–T	SP–1–T	–	–	12'	3'	RR Ridgecrest Rd	IS R73–6(CA) 4 5 7
(F)	1–A	10'	–	–	–	–	TV–2–T	SP–1–T	–	–	12'	3'	–	
(G)	24–4–100	30'	35'	15'	ROADWAY 1	2–MAS	SV–1–T	–	–	–	9'	3'	RR Bear Valley Rd	RR R10–12,R61 4 5 7
(H)	15TS	30'	–	15'	ROADWAY 1	–	SV–2–TA	SP–1–T	–	–	10'	3'	–	RR R9–3,R9–3bP
(I)	PPB	5'7"	–	–	–	–	–	–	6	S	12'	11'	–	
(J)	PPB	5'7"	–	–	–	–	–	–	6	S	14'	11'	–	
(K)	PPB	5'7"	–	–	–	–	–	–	8	E	14'	11'	–	
(L)	PPB	5'7"	–	–	–	–	–	–	8	E	12'	11'	–	
(M)	PPB	5'7"	–	–	–	–	–	–	2	N	12'	11'	–	
(N)	PPB	5'7"	–	–	–	–	–	–	2	N	11'	11'	–	

– ALL NEW EQUIPMENT UNLESS OTHERWISE NOTED
– I.I.S.N.S. SHALL BE ILLUMINATED BY LEDs
(*) SEE DETAIL "A"

ELECTRICAL POWER PEDESTAL ADDRESS: EXISTING

NORTHWEST QUADRANT DETAIL

SCALE: 1"=10'

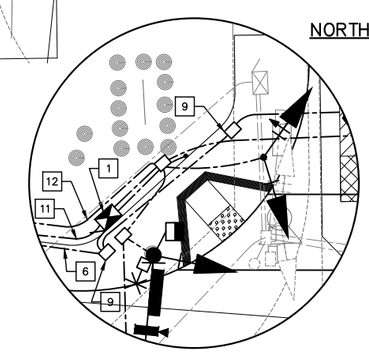

N

20 0 20 40
scale 1"= 20' feet

100% PLANS

NO.	REVISION	BY	DATE

APPROVED BY: DEPUTY DIRECTOR MAZIN KASEY DATE: R.C.E. 53328 EXP. 06–30–17

APPROVED BY: CITY ENGINEER BRIAN GENGLER DATE: R.C.E. 44730 EXP. 03–31–18

DESIGNED: ROBERT KILPATRICK
DRAWN: JERREMY CLARK
CHECKED: MINH PHAN

RECORD DRAWING DATE:
SCALE HORIZ: 1"=20' VERT: 1"=8'
PROJECT NO. XXXXX
CAD FILE: $FILEABBREV$

CITY OF VICTORVILLE
ENGINEERING DIVISION
14343 CIVIC DRIVE,
VICTORVILLE, CA 92392
(760) 955-5158

DAVID EVANS AND ASSOCIATES INC.
14297 CAJON AVENUE, SUITE 101
VICTORVILLE, CA 92392
Phone: 760.524.9101

DATE

REGISTERED PROFESSIONAL ENGINEER ROBERT A. KILPATRICK No. C42386 CIVIL STATE OF CALIFORNIA

BEAR VALLEY ROAD AT BNSF RAILROAD

TRAFFIC SIGNAL PLAN

BEAR VALLEY ROAD AND RIDGECREST ROAD

53 OF 81

TSP-2

DWG. NO.

V:\130149\Eng\130149-000\Final Plots\02_130149ts1.dwg, 2/7/2017 4:49:09 PM, jecl

Plot Date: 02/7/2017 4:49:10 PM User: Jecl File Name: V:\130149\Eng\130149-000\Final Plots\02_130149ts1.dwg Last Update: 2/7/2017 4:39:22 PM

PHASE DIAGRAM

	GROUP A		GROUP B	
RING 1	NOT USED		NOT USED	OL A
	PHASE 1	PHASE 2	PHASE 3	PHASE 4
RING 2	OL B		NOT USED	NOT USED
	PHASE 5	PHASE 6	PHASE 7	PHASE 8

POLE AND EQUIPMENT SCHEDULE

No.	POLE DATA TYPE	HGT.	SIGMA	LUMINAIRE M.A.	LED	SIGNAL MOUNTING MAST ARM	POLE	PED.	PED PUSH BTN PHASE	QUAD.	POLE LOCATION* A	B	I.I.S.N.S. LEGEND	REMARKS
A	24A-4-100	35'	35'	15'	ROADWAY 2	2-MAS	SV-1-T	SP-1-T	–	–	3'	11'	Industrial Blvd	4 5 7 8
B	1A	10'	–	–	–	–	TV-1-T	SP-1-T	–	–	3'	13'	–	
C	15TS	30'	–	15'	ROADWAY 1	–	–	–	–	–	3'	21'	–	
D	15TS	30'	–	15'	ROADWAY 1	–	SV-2-TA	SP-1-T	–	–	3'	19'	–	RR R9-3 16 R9-3bP
E	29-5-100	30'	55'	15'	ROADWAY 1	3-MAS	SV-2-TA	–	–	–	5'	**	Industrial Blvd	RR R9-3,R73-3(CA) 4 5 7 16 R9-3bP
F	19-4-100	30'	20'†	15' ***	ROADWAY 1	1-MAS	SV-2-TA	SP-1-T	–	–	5'	**	Bear Valley Rd	15 R73-6(CA) 4 5 7
G	PPB	5'7"	–	–	–	–	–	–	4	W	6'	**	–	
H	PPB	5'7"	–	–	–	–	–	–	4	E	14'	11'	–	
I	PPB	5'7"	–	–	–	–	–	–	6	S	14'	11'	–	
J	PPB	5'7"	–	–	–	–	–	–	6	S	19'	11'	–	

– ALL NEW EQUIPMENT UNLESS OTHERWISE NOTED
– I.I.S.N.S. SHALL BE ILLUMINATED BY LEDs
* SEE DETAIL "A"
** LOCATION SHOWN ON PLAN
*** ROTATE LUMINAIRE MASTARM 90 DEGREES
† MAST ARM SHORTER THAN STANDARD LENGTH

CABLE, CONDUCTOR, AND CONDUIT SCHEDULE

AWG OR CABLE		RUNS 1	2	3	4	5	6	7	8
12-#14 CABLE	A ø6,OLA,ø6P	1/0	–	–	–	–	–	–	–
	B ø4,OLB,ø4P	1/0	–	–	1/0	–	–	–	–
	C –	0/0	–	–	0/0	0/0	–	–	–
	D ø5,ø6,OLA,ø6P	2/0	–	–	2/0	2/0	2/0	–	–
	E ø2,ø5,ø4	2/0	2/0	2/0	–	–	–	–	–
	F ø2,ø4,OLB,ø4P	2/0	2/0	–	–	–	–	–	–
	G ø4PPB	0/1	0/1	–	–	–	–	–	–
	H ø4PPB	0/1	–	–	0/1	–	–	–	–
	I ø6PPB	0/1	–	–	0/1	–	–	–	–
3-#14 CABLE	J ø6PPB	0/1	–	–	0/1	0/1	–	–	–
	TOTALS	8/4	4/1	2/0	3/3	2/1	2/0	–	–
#14-3 AWG	SPARE	1	1	1	1	1	1	–	–
#12-2 AWG	I.I.S.N.S.	1	1	–	–	–	–	–	–
#10-2 AWG	LUMINAIRES	1	1	1	1	1	1	–	–
#8 AWG	BARE GROUND	1	1	1	1	1	1	–	–
VIDEO POWER CABLES		3	2	1	–	–	–	–	–
VIDEO DETECTION CABLES		3	2	1	–	–	–	–	–
** OPTICOM M138 CABLE		3	2	1	–	–	–	–	–
CAT6 WIRELESS ETHERNET RADIO CABLE		4	2	1	–	–	–	–	–
CONDUIT SIZE		2-4"(N)	4"(N)	4"(N)	4"(N)	2"(D),4"(N)	4"(N)	–	–

– SIGNAL CABLE (3 AND 12 CONDUCTOR) SHALL NOT BE SPLICED. RUN CABLE UP TO THE HANDHOLE AT EACH SIGNAL STANDARD. STRIP THE CABLE AT THIS POINT AND THE SIGNAL HEAD. THE OTHER UNUSED CONDUCTORS SHALL HAVE THE ENDS INSULATED AT THE HANDHOLE.
– ALL CONDUCTORS ARE NEW UNLESS OTHERWISE INDICATED. ALL CONDUIT IS EXISTING UNLESS OTHERWISE INDICATED (N).

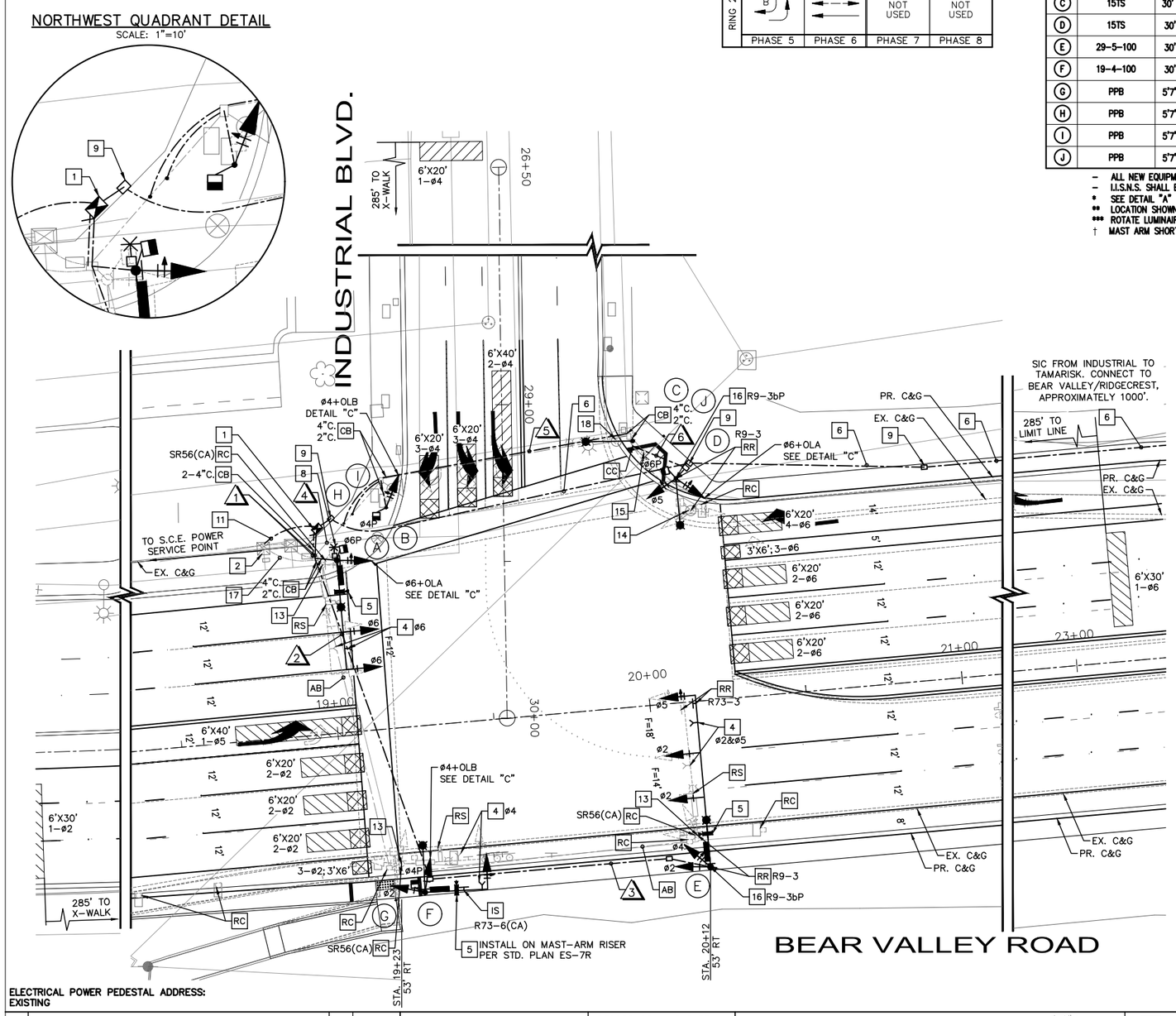

NO.	REVISION	BY	DATE

APPROVED BY: DEPUTY DIRECTOR MAZIN KASEY DATE: R.C.E. 53328 EXP. 06-30-17
APPROVED BY: CITY ENGINEER BRIAN GENGLER DATE: R.C.E. 44730 EXP. 03-31-18

DESIGNED: ROBERT KILPATRICK
DRAWN: JERREMY CLARK
CHECKED: MINH PHAN

RECORD DRAWING DATE:
SCALE HORIZ: 1"=20' VERT: 1"=8'
PROJECT NO. XXXXX
CAD FILE: $FILEABBREV$

CITY OF VICTORVILLE
ENGINEERING DIVISION
14343 CIVIC DRIVE,
VICTORVILLE, CA 92392
(760) 955-5158

DAVID EVANS AND ASSOCIATES INC.
14297 CAJON AVENUE, SUITE 101
VICTORVILLE, CA 92392
Phone: 760.524.9101
DATE

REGISTERED PROFESSIONAL ENGINEER ROBERT A. KILPATRICK No. C42386 CIVIL STATE OF CALIFORNIA

BEAR VALLEY ROAD AT BNSF RAILROAD
TRAFFIC SIGNAL PLAN
BEAR VALLEY ROAD AND INDUSTRIAL BOULEVARD

54 OF 81
TSP-3
DWG. NO.

100% PLANS

V:\130149\Eng\130149-000\Final Plots\03_130149ts1.dwg, 2/7/2017 4:50:58 PM, jecl
Plot Date: 02/7/2017 4:50:59 PM User: Jecl File Name: V:\130149\Eng\130149-000\Final Plots\03_130149ts1.dwg Last Update: 2/7/2017 4:44:40 PM

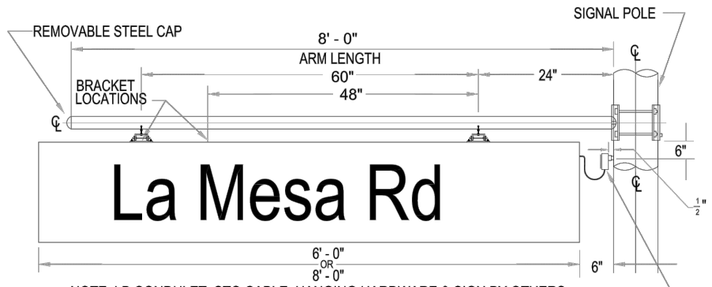

NOTE: LB CONDULET, STO CABLE, HANGING HARDWARE & SIGN BY OTHERS

1/2" COUPLING AT BOTTOM - FOR SIGN WIRING (NIPPLE & CONNECTORS REQUIRED)

NOTES:

1. BOTH LOWER MOUNTING ASSEMBLIES SHALL HAVE A SAFETY CABLE INSTALLED.
2. MANUFACTURE EACH SAFETY CABLE FROM ONE CONTINUOUS LENGTH OF 1/8" BRAIDED ZINC COATED STEEL CABLE.
3. UPPER SAFETY CABLE LOOP AROUND MAST ARM SHALL BE ON THE UPPER SIDE OF CLAMP. SECURE UPPER SAFETY CABLE LOOP TO CLAMP WITH A WIRE TIE.
4. LOWER SAFETY CABLE LOOP SHALL BE INSTALLED BETWEEN LOWER MOUNTING ASSEMBLY AND SIGN FRAME.
5. INSTALL 1/8" DOUBLE ALUMINUM FERRULE ON UPPER AND LOWER LOOP ENDS. EACH FERRULE SHALL BE CRIMPED WITH AWG 1 DIE.
6. INSTALLED SAFEY CABLE SHALL NOT ALLOW SIGN TO FALL IN EXCESS OF ONE INCH.

* I.I.S.N.S. SHALL BE DOUBLE SIDED UNLESS OTHERWISE NOTED.

DESIGN BY: ghaldreth	CITY OF VICTORVILLE	SCALE: NOT TO SCALE
DRAWN BY: GH		
CHECK BY: JR		
APP BY: BG	I.I.S.N.S. HORIZONAL MAST ARM	SHEET 1 OF 4
DATE 4/25/13		

ARM TUBE SIZE

LENGTH	END O.D. X BASE O.D. X THK.
8'-0"	2 3/8" X 3 1/2" X 11 GA.

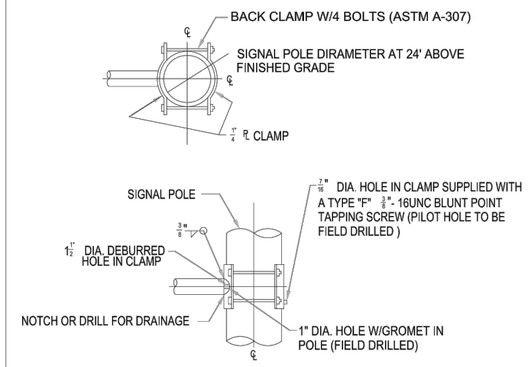

CLAMP DETAIL

DESIGN BY: GHaldreth	CITY OF VICTORVILLE	SCALE: NOT TO SCALE
DRAWN BY: GH		
CHECK BY: JR		
APP BY: BG	I.I.S.N.S. MAST ARM TUBE SIZE	SHEET 2 OF 4
DATE 4/24/13		

I.I.S.N.S. LEGEND DETAIL

SEE POLE AND EQUIPMENT SCHEDULE FOR CORRECT STREET NAMES

LEGEND:
1. INTERSTATE BLUE BLACKGROUND/WHITE LEGENDS
2. 8" UPPER CASE/6" LOWER CASE LETTERS
3. 2" UPPER CASE LETTERS

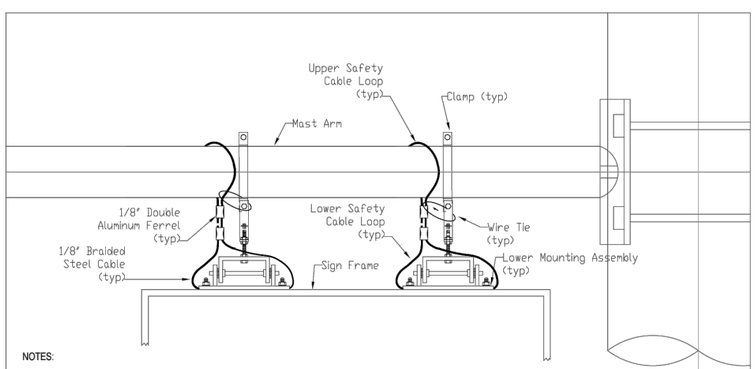

NOTES:

1. BOTH LOWER MOUNTING ASSEMBLIES SHALL HAVE A SAFETY CABLE INSTALLED.
2. MANUFACTURE EACH SAFETY CABLE FROM ONE CONTINUOUS LENGTH OF 1/8" BRAIDED ZINC COATED STEEL CABLE.
3. UPPER SAFETY CABLE LOOP AROUND MAST ARM SHALL BE ON THE UPPER SIDE OF CLAMP. SECURE UPPER SAFETY CABLE LOOP TO CLAMP WITH A WIRE TIE.
4. LOWER SAFETY CABLE LOOP SHALL BE INSTALLED BETWEEN LOWER MOUNTING ASSEMBLY AND SIGN FRAME.
5. INSTALL 1/8" DOUBLE ALUMINUM FERRULE ON UPPER AND LOWER LOOP ENDS. EACH FERRULE SHALL BE CRIMPED WITH AWG 1 DIE.
6. INSTALLED SAFEY CABLE SHALL NOT ALLOW SIGN TO FALL IN EXCESS OF ONE INCH.

DESIGN BY: Mike Falken	CITY OF VICTORVILLE	SCALE: NOT TO SCALE
DRAWN BY: MF/GH		
CHECK BY: JR		
APP BY: BG	I.I.S.N.S. SAFETY CABLE	SHEET 3 OF 4
DATE: 4/25/13		

GENERAL NOTES

MATERIAL SPECIFICATIONS	
SHAFT	Steel of 48,000 psi minimum yeild after fabricaiton
BASE PLATES & FLANGES	ASTM A-35 Steel ASTM A-36 Steel
PIPE	ASTM A-36--53 Grade "B" Steel
MATERIAL SPECIFICATIONS	
BUTT WELDS	Ground flush with base metal
LONGITUDINAL WELDS	All welds shall conform to AWS D1.1 weld specification
FINISH COATING	
STRUCTURE	Hot dip galvanized per ASTM A-123
HARDWARE	Hot dip galvanized per ASTM A-153
DESIGN CRITERIA	
STRUCTURE & HARDWARE	In accordance with the "Specification for Structrual Supports of Highway Signs, Luminaires and Traffic Signals. AASHTO 1994
WELDING	In accordance with the "Specification for Structrual Supports of Highway Signs, Luminaires and Traffic Signals. AASHTO 1994

DESIGN BY: ghaldreth	CITY OF VICTORVILLE	SCALE: NOT TO SCALE
DRAWN BY: GH		
CHECK BY: JR		
APP BY: BG	I.I.S.N.S. HORIZONAL MAST ARM (notes)	SHEET 4 OF 4
DATE: 4/25/13		

100% PLANS

NO.	REVISION	BY	DATE

APPROVED BY: DEPUTY DIRECTOR MAZIN KASEY DATE: _____ R.C.E. 53328 EXP. 06-30-17

APPROVED BY: CITY ENGINEER BRIAN GENGLER DATE: _____ R.C.E. 44730 EXP. 03-31-18

DESIGNED: ROBERT KILPATRICK

DRAWN: JERREMY CLARK

CHECKED: MINH PHAN

RECORD DRAWING DATE:

SCALE HORIZ: 1"=20' VERT: 1"=8'

PROJECT NO. XXXXX
CAD FILE: $FILEABBREV$

CITY OF VICTORVILLE
ENGINEERING DIVISION
14343 CIVIC DRIVE,
VICTORVILLE, CA 92392
(760) 955-5158

DAVID EVANS AND ASSOCIATES INC.
14297 CAJON AVENUE, SUITE 101
VICTORVILLE, CA 92392
Phone: 760.524.9101

DATE

REGISTERED PROFESSIONAL ENGINEER ROBERT A. KILPATRICK No. C42386 CIVIL STATE OF CALIFORNIA

BEAR VALLEY ROAD AT BNSF RAILROAD

TRAFFIC SIGNAL PLAN

I.I.S.N.S. DETAILS

TSP-4

DWG. NO.

Plot Date: 09/12/2017 2:42:37 PM User: Acty File Name: V:\130149\Eng\130149-000\Final Plots\04_130149ts1.dwg Last Update: 9/12/2017 2:37:56 PM

DIST	COUNTY	ROUTE	POST MILES TOTAL PROJECT	SHEET No	TOTAL SHEETS
08	SB	CR		56	81

REGISTERED CIVIL ENGINEER — DATE

PLANS APPROVAL DATE

The State of California or its officers or agents shall not be responsible for the accuracy or completeness of scanned copies of this plan sheet.

REGISTERED PROFESSIONAL ENGINEER — F. ENRIQUEZ — No. C84849 — Exp. 3/31/20 — CIVIL — STATE OF CALIFORNIA

DOKKEN ENGINEERING
110 BLUE RAVINE ROAD, SUITE 200
FOLSOM, CA 95630

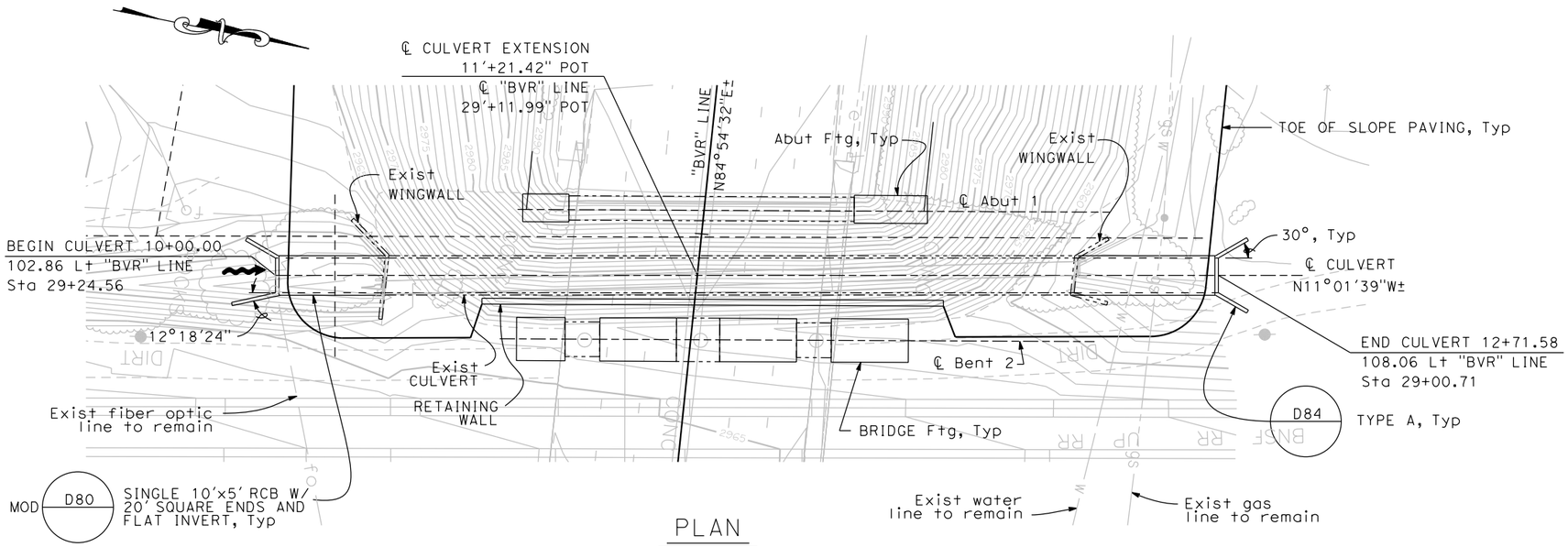

PLAN

1" = 20'

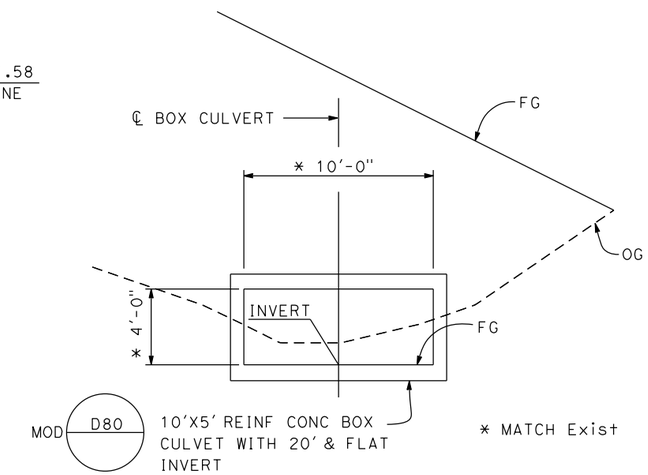

TYPICAL SECTION

¼" = 1'-0"

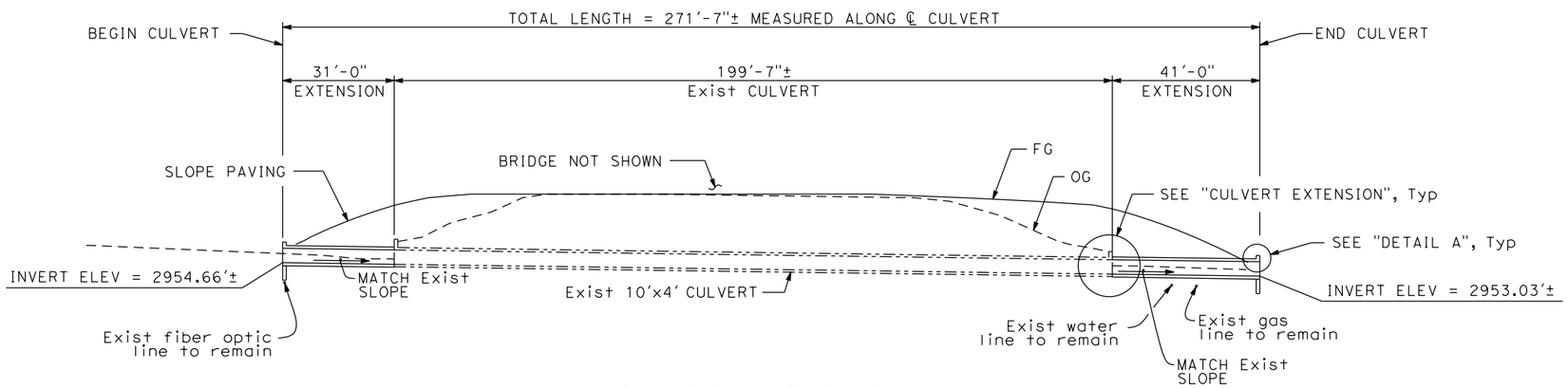

LONGITUDINAL SECTION

1" = 20'

STANDARD PLANS DATED 2015

Sheet No.	Title
A10A	ABBREVIATIONS (SHEET 1 OF 2)
RSP A10B	ABBREVIATIONS (SHEET 2 OF 2)
A10C	LINES AND SYMBOLS (SHEET 1 OF 2)
A10D	LINES AND SYMBOLS (SHEET 2 OF 2)
A10E	LINES AND SYMBOLS (SHEET 3 OF 3)
A62E	EXCAVATION AND BACKFILL - CAST-IN-PLACE REINFORCED CONCRETE BOX AND ARCH CULVERTS
D80	CAST-IN-PLACE REINFORCED CONCRETE SINGLE BOX CULVERT
D82	CAST-IN-PLACE REINFORCED CONCRETE BOX BOX CULVERT MISCELLANEOUS DETAILS
D84	BOX CULVERT WINGWALLS TYPES A,B, AND C

STANDARD PLAN SHEET No.

DETAIL No.

LEGEND

——— DENOTES Exist STRUCTURE

QUANTITIES

Item	Total
STRUCTURAL CONCRETE, BOX CULVERT	119 CY
BAR REINFORCING STEEL (BOX CULVERT)	25000 LB
DRILL AND BOND DOWEL	38 LF
REMOVE HEADWALL	1 LS

NOTE:

The contractor shall verify all controlling field dimensions before ordering or fabricating any material.

DESIGN OVERSIGHT

SIGN OFF DATE

	BY	CHECKED
DESIGN	F. Enriquez	T. Osterkamp
DETAILS	R. Liptak	T. Osterkamp
QUANTITIES	F. Enriquez	N. Ortigoza

PREPARED FOR THE CITY OF VICTORVILLE

T. Osterkamp
PROJECT ENGINEER

BRIDGE NO. 54C0547
POST MILES

BEAR VALLEY ROAD OVERHEAD
10'x4' CULVERT EXTENSION

DESIGN DETAIL SHEET (ENGLISH) (REV. 03/14/12)

ORIGINAL SCALE IN INCHES FOR REDUCED PLANS 0 1 2 3

UNIT:
PROJECT NUMBER & PHASE:
CONTRACT NO.:

DISREGARD PRINTS BEARING EARLIER REVISION DATES

REVISION DATES: X

SHEET 1 OF 2

FILE => J:\2007_Bear_Vly_BR_Widen\517\Culvert\2007CULVERT01.dgn

USERNAME => untitled DATE PLOTTED => 12/3/2018 TIME PLOTTED => 4:48:05 PM

DIST	COUNTY	ROUTE	POST MILES TOTAL PROJECT	SHEET No	TOTAL SHEETS
08	SB	CR		57	81

REGISTERED CIVIL ENGINEER — DATE

PLANS APPROVAL DATE

REGISTERED PROFESSIONAL ENGINEER — F. ENRIQUEZ — No. C84849 — Exp. 3/31/20 — CIVIL — STATE OF CALIFORNIA

The State of California or its officers or agents shall not be responsible for the accuracy or completeness of scanned copies of this plan sheet.

DOKKEN ENGINEERING
110 BLUE RAVINE ROAD, SUITE 200
FOLSOM, CA 95630

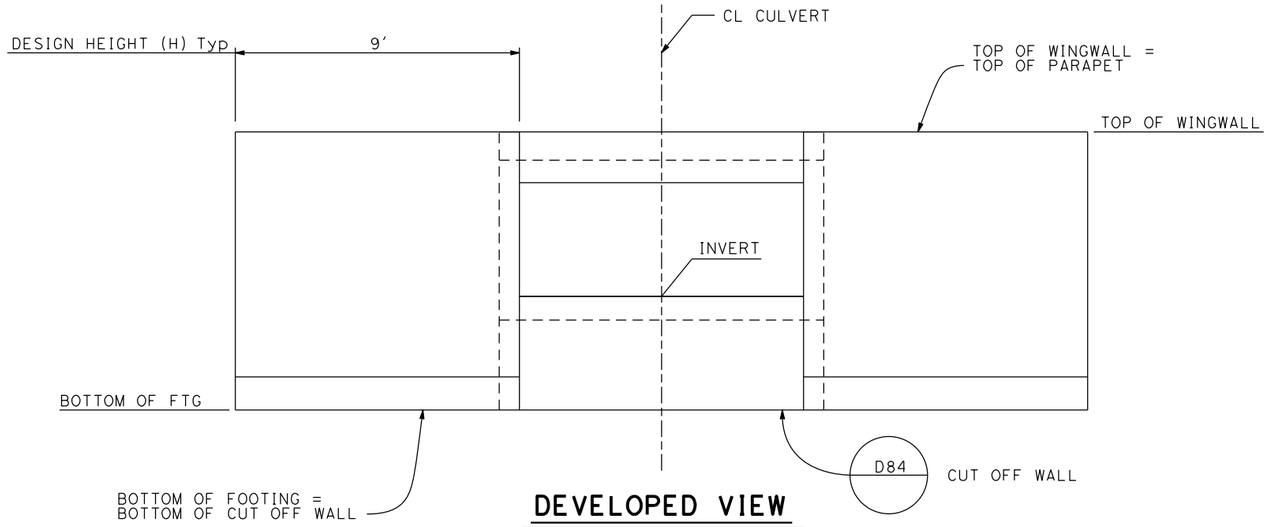

DEVELOPED VIEW

3/8" = 1'-0"

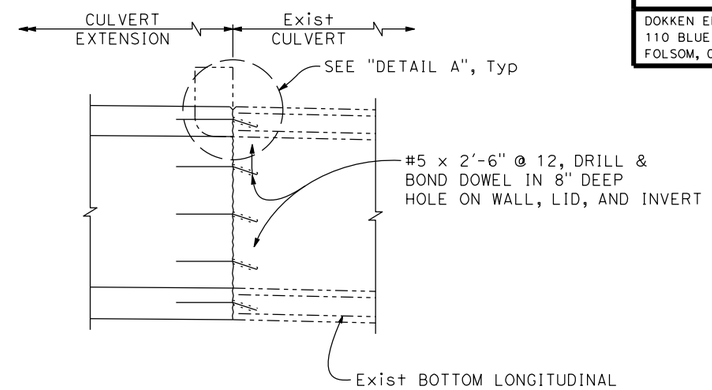

CULVERT EXTENSION DETAIL

1/2" = 1'

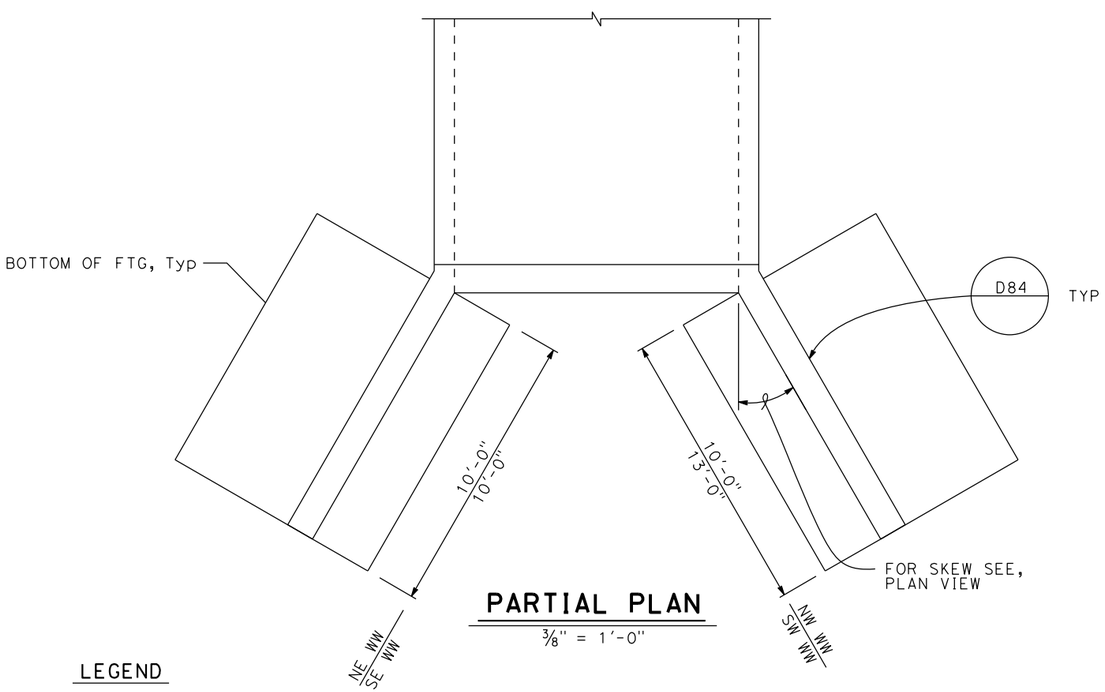

PARTIAL PLAN

3/8" = 1'-0"

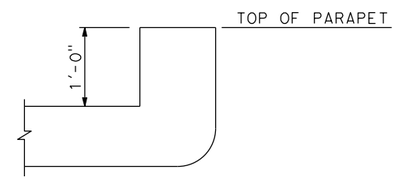

DETAIL A

1" = 1'-0"

FOR DETAILS NOT SHOWN, SEE D82

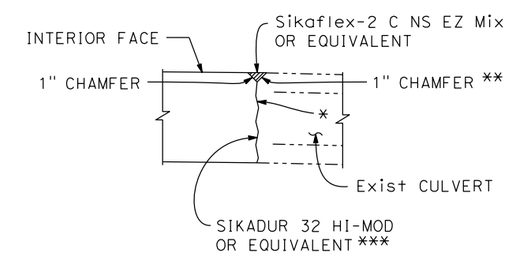

CONSTRUCTION JOINT DETAIL

1 1/2" = 1'

* ROUGHEN TO 1/4" AMPLITUDE. PROVIDE 1" GROOVE PRIOR TO DRILL AND BOND DOWELS ALONG ENTIRE FACE OF THE Exist CULVERT.

** GRIND Exist CULVERT AT A 45 DEGREE ANGLE

*** ALONG ENTIRE FACE OF THE Exist CULVERT

LEGEND

—·—·— DENOTES Exist STRUCTURE

DESIGN OVERSIGHT

SIGN OFF DATE

	BY	CHECKED
DESIGN	F. Enriquez	T. Osterkamp
DETAILS	R. Liptak	T. Osterkamp
QUANTITIES	F. Enriquez	N. Ortigoza

PREPARED FOR THE CITY OF VICTORVILLE

T. Osterkamp
PROJECT ENGINEER

BRIDGE NO. 54C0547
POST MILES

BEAR VALLEY ROAD OVERHEAD
10'x4' CULVERT EXTENSION

DESIGN DETAIL SHEET (ENGLISH) (REV. 03/14/12)

ORIGINAL SCALE IN INCHES FOR REDUCED PLANS 0 1 2 3

UNIT:
PROJECT NUMBER & PHASE:
CONTRACT NO.:

DISREGARD PRINTS BEARING EARLIER REVISION DATES

REVISION DATES: X

SHEET 1 OF 2

FILE => J:\2007_Bear_Vly_BR_Widen\517\Culvert\2007CULVERT02.dgn

USERNAME => untitled DATE PLOTTED => 12/3/2018 TIME PLOTTED => 41:48:45 PM

DIST	COUNTY	ROUTE	POST MILES TOTAL PROJECT	SHEET No	TOTAL SHEETS
08	SB	CR		58	81

REGISTERED CIVIL ENGINEER DATE

PLANS APPROVAL DATE

REGISTERED PROFESSIONAL ENGINEER T. OSTERKAMP No. C46783 Exp. 6/30/19 CIVIL STATE OF CALIFORNIA

The State of California or its officers or agents shall not be responsible for the accuracy or completeness of scanned copies of this plan sheet.

DOKKEN ENGINEERING
110 BLUE RAVINE ROAD, SUITE 200
FOLSOM, CA 95630

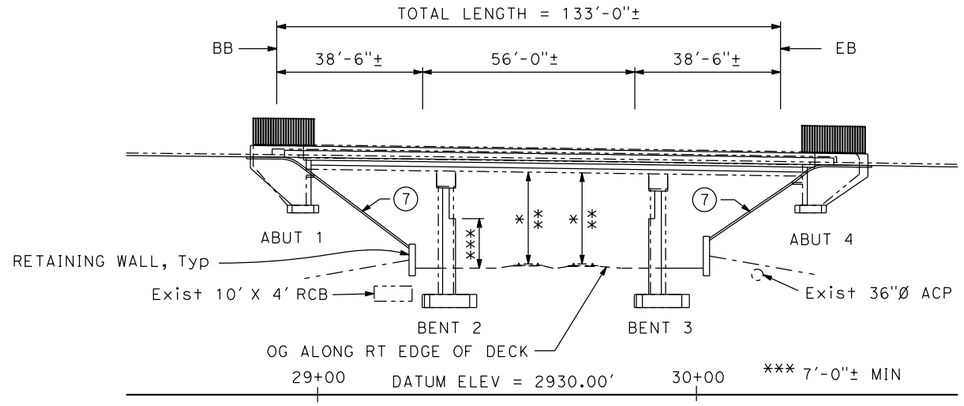

ELEVATION

1" = 20'

	WEST TRACK	EAST TRACK
* MIN VERT CLR TO WIDENING	24'-0"±	23'-5"±
** MIN VERT CLR TO EXISTING	22'-9¼"±	22'-3"±

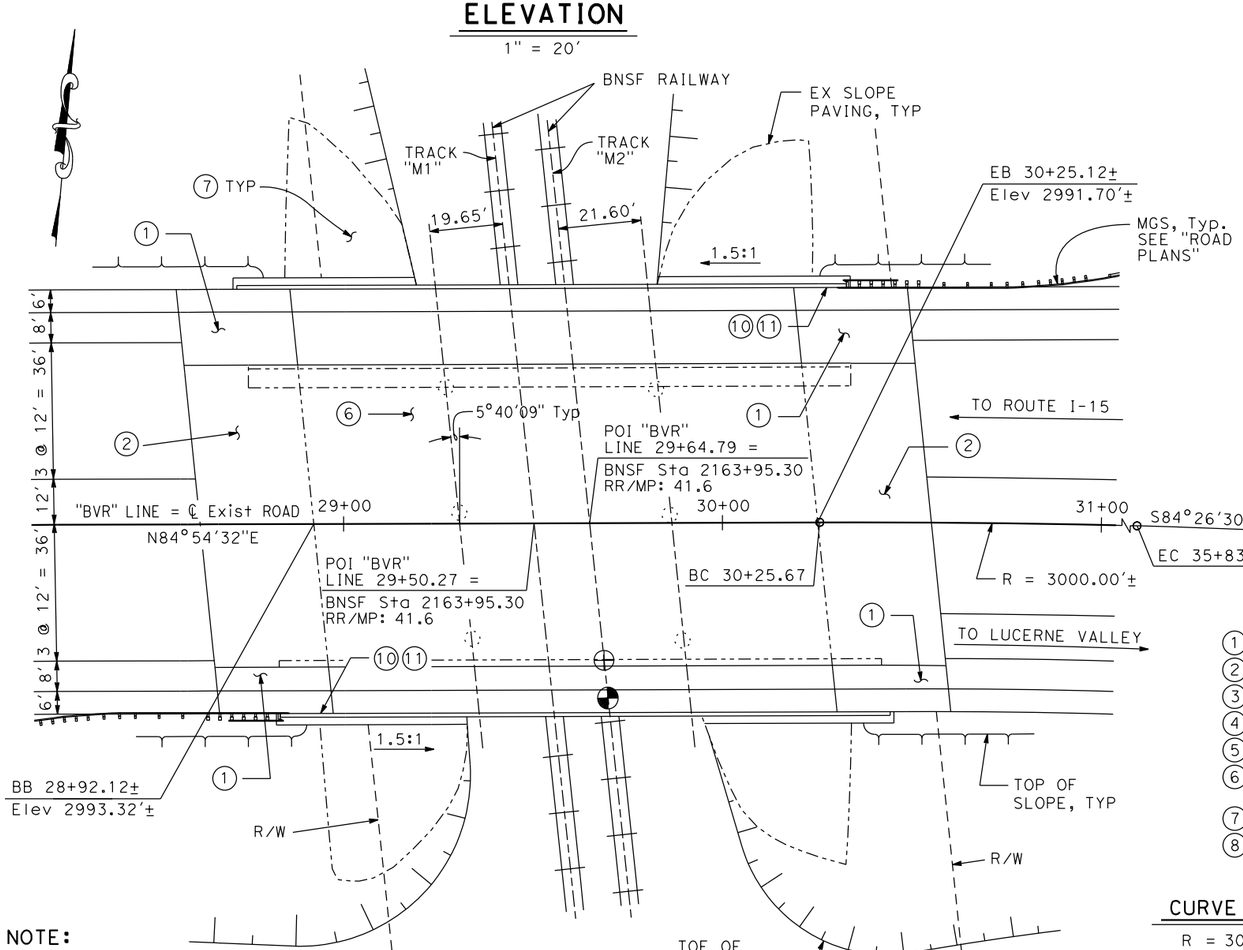

PLAN

1" = 20'

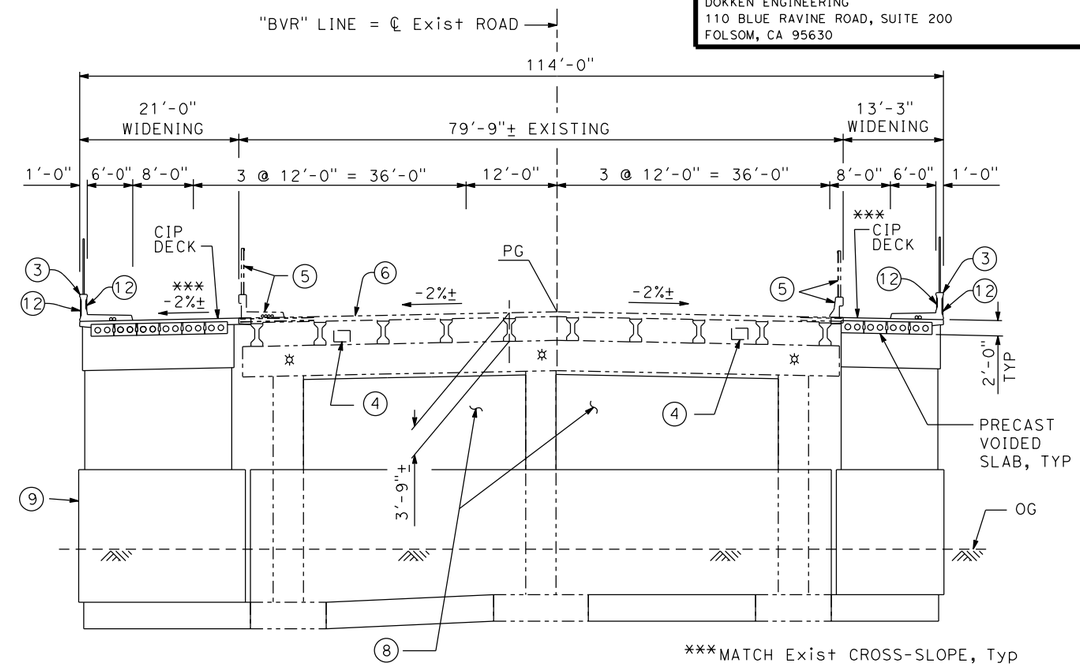

TYPICAL SECTION

1" = 10'

LEGEND:

1. STRUCTURE APPROACH TYPE N(30S)
2. STRUCTURE APPROACH TYPE R(30S)
3. CONCRETE BARRIER TYPE 732SW (MOD) W/ PICKET RAILING
4. 18" x 26" EX FUTURE UTILITY OPENING
5. REMOVE EX BARRIER, SIDEWALK AND RAILING
6. BRIDGE DECK METHACRYLATE RESIN TREATMENT, FOR LIMITS SEE "TYPICAL SECTION" SHEET
7. SLOPE PAVING, H=1.5 : V=1.0
8. INFILL WALLS
9. CRASH WALLS
10. PAINT "BEAR VALLEY ROAD OVERHEAD" & YEAR COMPLETED
11. PAINT "BRIDGE NO. 54C0547"
12. ARCHITECTURAL TREATMENT

✲ RAILWAY TRACK LIGHTING FIXTURES (NEW)
◕ DENOTES POINT OF MIN VERT CLR TO WIDENING
⊕ DENOTES POINT OF MIN VERT CLR TO EXISTING
—·—·— DENOTES Exist STRUCTURE

CURVE DATA

R = 3000.00'
△ = 10°38'58"
T = 279.61'
L = 557.60'

NOTES:

1. FOR "INDEX TO PLANS" AND "STANDARD PLANS", SEE "INDEX TO PLANS" SHEET.
2. FOR GENERAL NOTES, SEE "FOUNDATION PLAN" SHEET.

NOTE:

The contractor shall verify all controlling field dimensions before ordering or fabricating any material.

	BY	CHECKED
DESIGN	T. Osterkamp	M. Iley
DETAILS	R. Liptak	M. Iley
QUANTITIES	R. Liptak / F. Enriquez	M. Iley

LOAD & RESISTANCE FACTOR DESIGN — LIVE LOADING: HL93 W/"LOW-BOY"; PERMIT DESIGN VEHICLE
LAYOUT — BY — CHECKED
SPECIFICATIONS — BY — PLANS AND SPECS COMPARED

PREPARED FOR THE CITY OF VICTORVILLE

T. Osterkamp
PROJECT ENGINEER

BRIDGE NO. 54C0547
POST MILES

BEAR VALLEY ROAD OVERHEAD
GENERAL PLAN No. 1

DESIGN GENERAL PLAN SHEET (ENGLISH) (REV. 03/14/12)

ORIGINAL SCALE IN INCHES FOR REDUCED PLANS 0 1 2 3

UNIT:
PROJECT NUMBER & PHASE:
CONTRACT NO.:

DISREGARD PRINTS BEARING EARLIER REVISION DATES

REVISION DATES: x

SHEET 1 OF 24

FILE => J:\2007_Bear_Vly_BR_Widen\517\2007GP01.dgn

USERNAME => unknown DATE PLOTTED => 12/3/2018 TIME PLOTTED => 11:42:50 PM

DIST	COUNTY	ROUTE	POST MILES TOTAL PROJECT	SHEET No	TOTAL SHEETS
08	SB	CR		59	81

REGISTERED CIVIL ENGINEER DATE

PLANS APPROVAL DATE

REGISTERED PROFESSIONAL ENGINEER T. OSTERKAMP No. C46783 Exp. 6/30/19 CIVIL STATE OF CALIFORNIA

The State of California or its officers or agents shall not be responsible for the accuracy or completeness of scanned copies of this plan sheet.

DOKKEN ENGINEERING
110 BLUE RAVINE ROAD, SUITE 200
FOLSOM, CA 95630

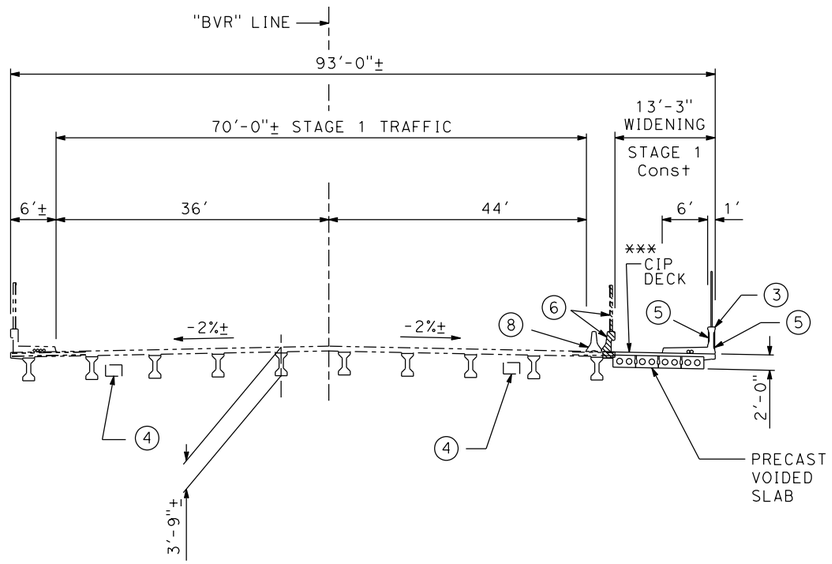

STAGE 1 CONSTRUCTION

1" = 10'

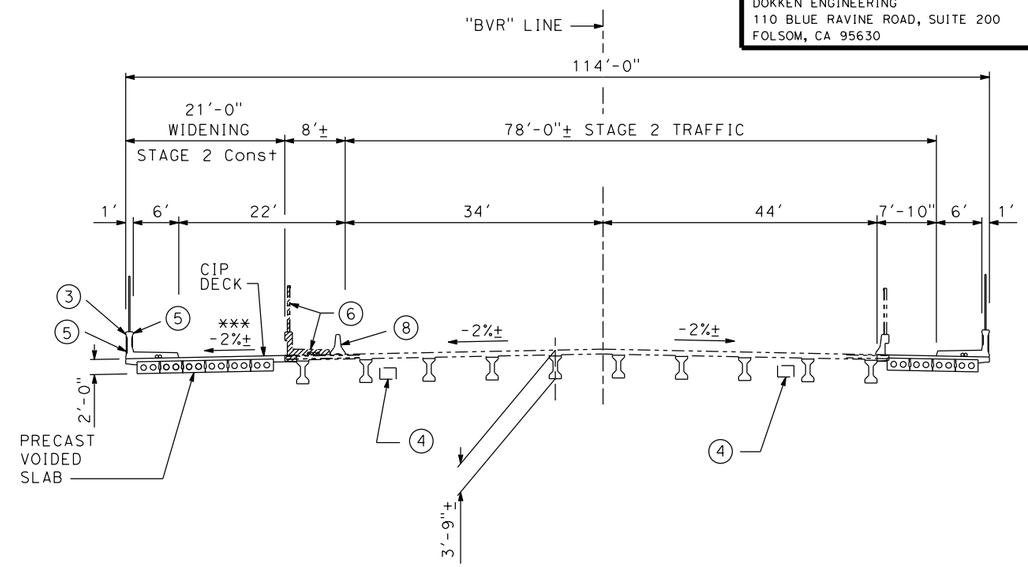

STAGE 2 CONSTRUCTION

1" = 10'

LEGEND:

(3) CONCRETE BARRIER TYPE 732SW (MOD) W/ PICKET RAILING
(4) 18" X 26" EX FUTURE UTILITY OPENING
(5) ARCHITECTURAL TREATMENT
(6) REMOVE EX BARRIER, SIDEWALK AND RAILING
(7) BRIDGE DECK METHACRYLATE RESIN TREATMENT
(8) TEMPORARY RAILING TYPE K
REMOVE EX OVERHANG, BARRIER, SIDEWALK AND RAILING
—--—--— DENOTES EX STRUCTURE
*** MATCH Exist CROSS-SLOPE, Typ

DESIGN OVERSIGHT

SIGN OFF DATE

	BY	CHECKED
DESIGN	T. Osterkamp	M. Iley
DETAILS	R. Liptak	M. Iley
QUANTITIES	R. Liptak / F. Enriquez	M. Iley

PREPARED FOR THE CITY OF VICTORVILLE

T. Osterkamp
PROJECT ENGINEER

BRIDGE NO. 54C0547
POST MILES

BEAR VALLEY ROAD OVERHEAD
GENERAL PLAN No. 2

DESIGN DETAIL SHEET (ENGLISH) (REV. 03/14/12)

ORIGINAL SCALE IN INCHES FOR REDUCED PLANS 0 1 2 3

UNIT:
PROJECT NUMBER & PHASE: CONTRACT NO.:

DISREGARD PRINTS BEARING EARLIER REVISION DATES

REVISION DATES: X

SHEET 2 OF 24

FILE => J:\2007_Bear_Vly_BR_Widen\517\2007GP02.dgn

USERNAME => untitled DATE PLOTTED => 12/3/2018 TIME PLOTTED => 11:59:37 PM

DIST	COUNTY	ROUTE	POST MILES TOTAL PROJECT	SHEET No	TOTAL SHEETS
08	SB	CR		60	81

REGISTERED CIVIL ENGINEER DATE

PLANS APPROVAL DATE

The State of California or its officers or agents shall not be responsible for the accuracy or completeness of scanned copies of this plan sheet.

REGISTERED PROFESSIONAL ENGINEER T. OSTERKAMP No. C46783 Exp. 6/30/19 CIVIL STATE OF CALIFORNIA

DOKKEN ENGINEERING
110 BLUE RAVINE ROAD, SUITE 200
FOLSOM, CA 95630

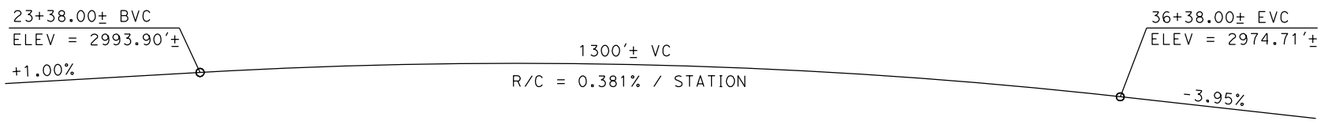

PROFILE GRADE - BEAR VALLEY ROAD

NO SCALE

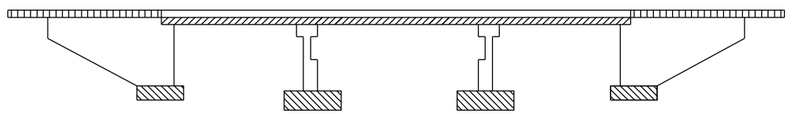

STRUCTURAL CONCRETE, BRIDGE

STRUCTURAL CONCRETE, APPROACH SLAB

STRUCTURAL CONCRETE, BRIDGE FOOTING

PRECAST VOIDED SLAB

CONCRETE STRENGTH AND TYPE LIMITS

NO SCALE

QUANTITIES

	Item	Total	
1	STRUCTURE EXCAVATION (BRIDGE)	1602	CY
2	STRUCTURE EXCAVATION (RETAINING WALL)	125	CY
3	STRUCTURE BACKFILL (BRIDGE)	977	CY
4	STRUCTURE BACKFILL (RETAINING WALL)	33	CY
5	STRUCTURAL CONCRETE, BRIDGE FOOTING	302	CY
6	STRUCTURAL CONCRETE, BRIDGE	818	CY
7	STRUCTURAL CONCRETE, RETAINING WALL	93	CY
8	STRUCTURAL CONCRETE, APPROACH SLAB (TYPE N)	77	CY
9	STRUCTURAL CONCRETE, APPROACH SLAB (TYPE R)	179	CY
10	ARCHITECTURAL TREATMENT	570	SQFT
11	DRILL AND GROUT DOWEL	984	LF
12	CLEAN EXPANSION JOINT	160	LF
13	FURNISH PRECAST PRESTRESSED CONCRETE DECK UNIT (SLAB TYPE) (30'-40')	20	EA
14	FURNISH PRECAST PRESTRESSED CONCRETE DECK UNIT (SLAB TYPE) (50'-60')	10	EA
15	ERECT PRECAST PRESTRESSED CONCRETE DECK UNIT	30	EA
16	JOINT SEAL (MR 1")	230	LF
17	BAR REINFORCING STEEL (BRIDGE)	176845	LB
18	BAR REINFORCING STEEL (RETAINING WALL)	6700	LB
19	PREPARE CONCRETE BRIDGE DECK SURFACE	10186	SQFT
20	TREAT BRIDGE DECK	10186	SQFT
21	FURNISH BRIDGE DECK TREATMENT MATERIAL	118	GAL
22	BRIDGE REMOVAL (PORTION)	1	LS
23	SLOPE PAVING (CONCRETE)	159	CY
24	PICKET RAILING	326	LF
25	CONCRETE BARRIER (TYPE 732SW)	326	LF

INDEX TO PLANS

SHEET NO.	TITLE
1	GENERAL PLAN No. 1
2	GENERAL PLAN No. 2
3	INDEX TO PLANS
4	FOUNDATION PLAN
5	ABUTMENT 1 LAYOUT
6	ABUTMENT 4 LAYOUT
7	ABUTMENT DETAILS
8	BENT LAYOUT NO. 1
9	BENT LAYOUT NO. 2
10	BENT DETAILS NO. 1
11	BENT DETAILS NO. 2
12	BENT DETAILS NO. 3
13	TYPICAL SECTION
14	GIRDER LAYOUT
15	PC/PS CONCRETE SLAB GIRDER
16	MISCELLANEOUS DETAILS
17	ARCHITECTURAL DETAILS
18	CONSTRUCTION SEQUENCE
19	SUB HORIZONTAL GROUND ANCHOR DETAILS
20	SLOPE PAVING - FULL SLOPE
21	LOG OF TEST BORING NO. 1
22	LOG OF TEST BORING NO. 2
23	LOG OF TEST BORING NO. 3
24	(AS BUILT) LOG OF TEST BORINGS

STANDARD PLANS DATED 2015

	Sheet No.	Title
	A3A	ABBREVIATIONS (SHEET 1 OF 3)
	A3B	ABBREVIATIONS (SHEET 2 OF 3)
	A3C	ABBREVIATIONS (SHEET 3 OF 3)
	A10A	LEGEND - LINES AND SYMBOLS (SHEET 1 OF 5)
RSP	A10B	LEGEND - LINES AND SYMBOLS (SHEET 2 OF 5)
	A10C	LEGEND - LINES AND SYMBOLS (SHEET 3 OF 5)
	A10D	LEGEND - LINES AND SYMBOLS (SHEET 4 OF 5)
	A10E	LEGEND - LINES AND SYMBOLS (SHEET 5 OF 5)
	A10F	LEGEND - SOIL (SHEET 1 OF 2)
	A10G	LEGEND - SOIL (SHEET 2 OF 2)
	A10H	LEGEND - ROCK
	A62C	LIMITS OF PAYMENT FOR EXCAVATION AND BACKFILL BRIDGE
	B0-13	BRIDGE DETAILS
	B6-21	JOINT SEALS (MAXIMUM MOVEMENT RATING = 2")
RSP	B9-1	STRUCTURE APPROACH - TYPE N (30)
RSP	B9-2	STRUCTURE APPROACH - TYPE R (30)
RSP	B9-5	STRUCTURE APPROACH - SLAB DETAILS
RSP	B9-6	STRUCTURE APPROACH - DRAINAGE DETAILS
RSP	B11-58	CONCRETE BARRIER - TYPE 732SW (SHEET 1 OF 2)
RSP	B11-59	CONCRETE BARRIER - TYPE 732SW (SHEET 2 OF 2)

STANDARD PLAN SHEET No.

DETAIL No.

DESIGN OVERSIGHT

SIGN OFF DATE

	BY	CHECKED
DESIGN	T. Osterkamp	M. Iley
DETAILS	R. Liptak	M. Iley
QUANTITIES	R. Liptak / F. Enriquez	M. Iley

PREPARED FOR THE CITY OF VICTORVILLE

T. Osterkamp
PROJECT ENGINEER

BRIDGE NO. 54C0547

POST MILES

BEAR VALLEY ROAD OVERHEAD
INDEX TO PLANS

DESIGN DETAIL SHEET (ENGLISH) (REV. 03/14/12)

ORIGINAL SCALE IN INCHES FOR REDUCED PLANS 0 1 2 3

UNIT:
PROJECT NUMBER & PHASE: CONTRACT NO.:

DISREGARD PRINTS BEARING EARLIER REVISION DATES

REVISION DATES x

SHEET 3 OF 24

FILE => J:\2007_Bear_Vly_BR_Widen\517\2007INDX.dgn

USERNAME => untitled DATE PLOTTED => 12/3/2018 TIME PLOTTED => 11:49:33 PM

DIST	COUNTY	ROUTE	POST MILES TOTAL PROJECT	SHEET No	TOTAL SHEETS
08	SB	CR		61	81

REGISTERED CIVIL ENGINEER DATE

PLANS APPROVAL DATE

The State of California or its officers or agents shall not be responsible for the accuracy or completeness of scanned copies of this plan sheet.

REGISTERED PROFESSIONAL ENGINEER T. OSTERKAMP No. C46783 Exp. 6/30/19 CIVIL STATE OF CALIFORNIA

DOKKEN ENGINEERING
110 BLUE RAVINE ROAD, SUITE 200
FOLSOM, CA 95630

PLAN

1" = 20'

CURVE DATA

R = 3000.00'
△ = 10°38'58"
T = 279.61'
L = 557.60'

LEGEND

DENOTES BOTTOM OF FOOTING ELEV

DENOTES EX STRUCTURE

(1) POI "BVR" LINE 29+50.27 = BNSF Sta 2163+95.30
RR/MP: 41.6

(2) POI "BVR" LINE 29+64.79 = BNSF Sta 2163+95.30
RR/MP: 41.6

GENERAL NOTES
LOAD AND RESISTANCE FACTOR DESIGN

DESIGN:
AASHTO LRFD Bridge Design Specifications, 6th edition
with California Amendments

SEISMIC DESIGN:
Caltrans Seismic Design Criteria (SDC), Version 1.7, April 2013

DEAD LOAD:
Includes 35 psf for future wearing surface.

LIVE LOADING:
HL93 and permit design load.

SEISMIC LOADING:
Soil profile type D : Vs30 = 280 m/s
Magnitude group (6.5 ±0.25)
Peak Ground Acceleration 0.54g

CONCRETE:
fy = 60 ksi
f'c = 3.6 ksi
n = 8

SPREAD FOOTING DATA TABLE

Support Location	Service Permissible Net Contact Stress (Settlement) (ksf)	Strength/Construction Factored Gross Nominal Bearing Resistance ϕ_b = 0.45 (ksf)	Extreme Event Factored Gross Nominal Bearing Resistance ϕ_b = 1.00 (ksf)
Abut 1	11.2	30.3	N/A
Bent 2	7.9	20.15	44.7
Bent 3	7.9	20.15	44.7
Abut 4	11.2	30.3	N/A

DESIGN OVERSIGHT
SIGN OFF DATE

SCALE: AS NOTED | VERT. DATUM = NAVD88 | HORZ. DATUM = NAD83
PHOTOGRAMMETRY AS OF: | ALIGNMENT TIES
SURVEYED BY | DRAFTED BY
FIELD CHECKED BY | CHECKED BY

	BY	CHECKED
DESIGN	T. Osterkamp	M. Iley
DETAILS	R. Liptak	M. Iley
QUANTITIES	R. Liptak / F. Enriquez	M. Iley

PREPARED FOR THE CITY OF VICTORVILLE

T. Osterkamp
PROJECT ENGINEER

BRIDGE NO. 54C0547
POST MILES

BEAR VALLEY ROAD OVERHEAD
FOUNDATION PLAN

FOUNDATION PLAN SHEET (ENGLISH) (REV. 03/14/12)

ORIGINAL SCALE IN INCHES FOR REDUCED PLANS 0 1 2 3

UNIT:
PROJECT NUMBER & PHASE: CONTRACT NO.:

DISREGARD PRINTS BEARING EARLIER REVISION DATES

REVISION DATES | SHEET 4 OF 24

FILE => J:\2007_Bear_Vly_BR_Widen\517\2007FP01.dgn

USERNAME => untitled DATE PLOTTED => 12/3/2018 TIME PLOTTED => 1:51:00 PM

DIST	COUNTY	ROUTE	POST MILES TOTAL PROJECT	SHEET No	TOTAL SHEETS
08	SB	CR		62	81

REGISTERED CIVIL ENGINEER DATE

PLANS APPROVAL DATE

REGISTERED PROFESSIONAL ENGINEER T. OSTERKAMP No. C46783 Exp. 6/30/19 CIVIL STATE OF CALIFORNIA

The State of California or its officers or agents shall not be responsible for the accuracy or completeness of scanned copies of this plan sheet.

DOKKEN ENGINEERING
110 BLUE RAVINE ROAD, SUITE 200
FOLSOM, CA 95630

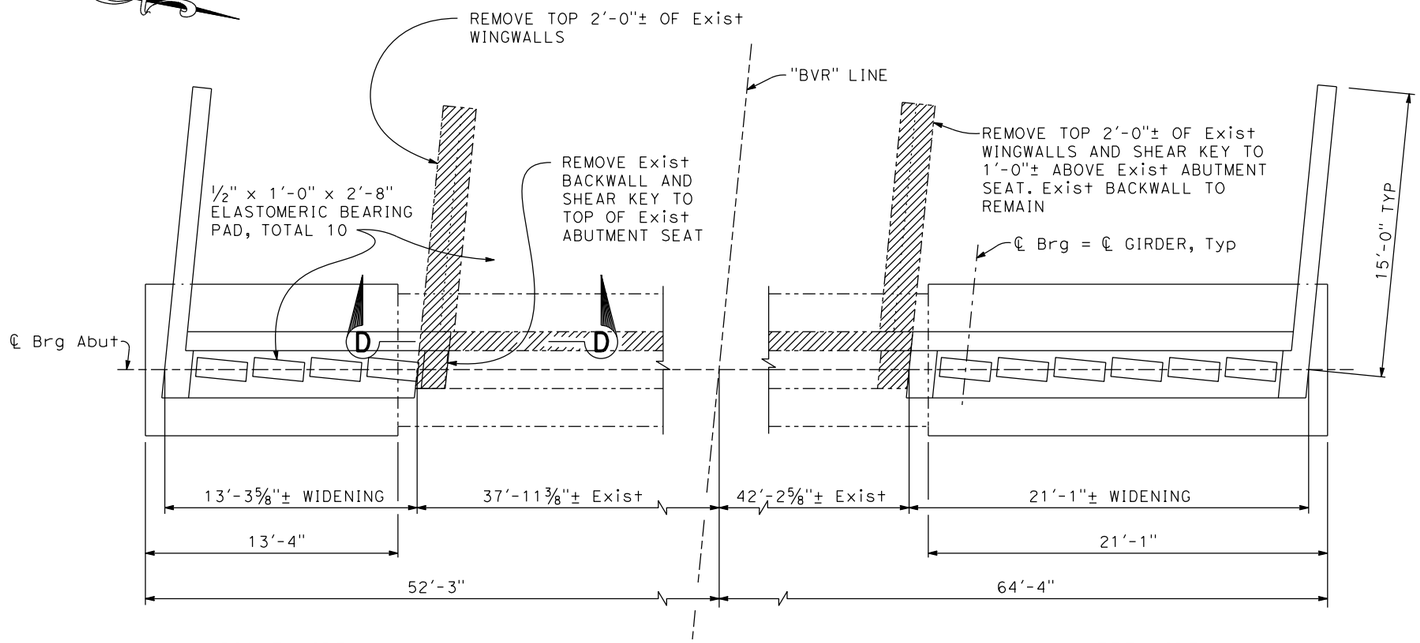

PLAN

1/4" = 1'-0"

(FOR SECTION D-D, SEE "ABUTMENT DETAILS" SHEET)

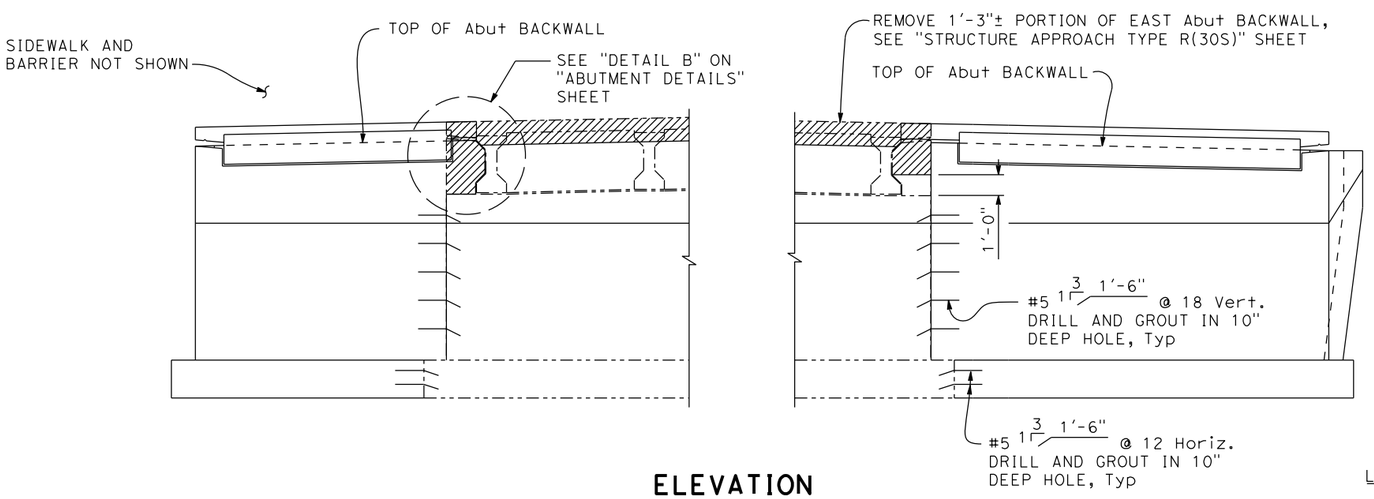

ELEVATION

1/4" = 1'-0"

LEGEND:

- - - - - - DENOTES EX STRUCTURE

DENOTES CONCRETE REMOVAL

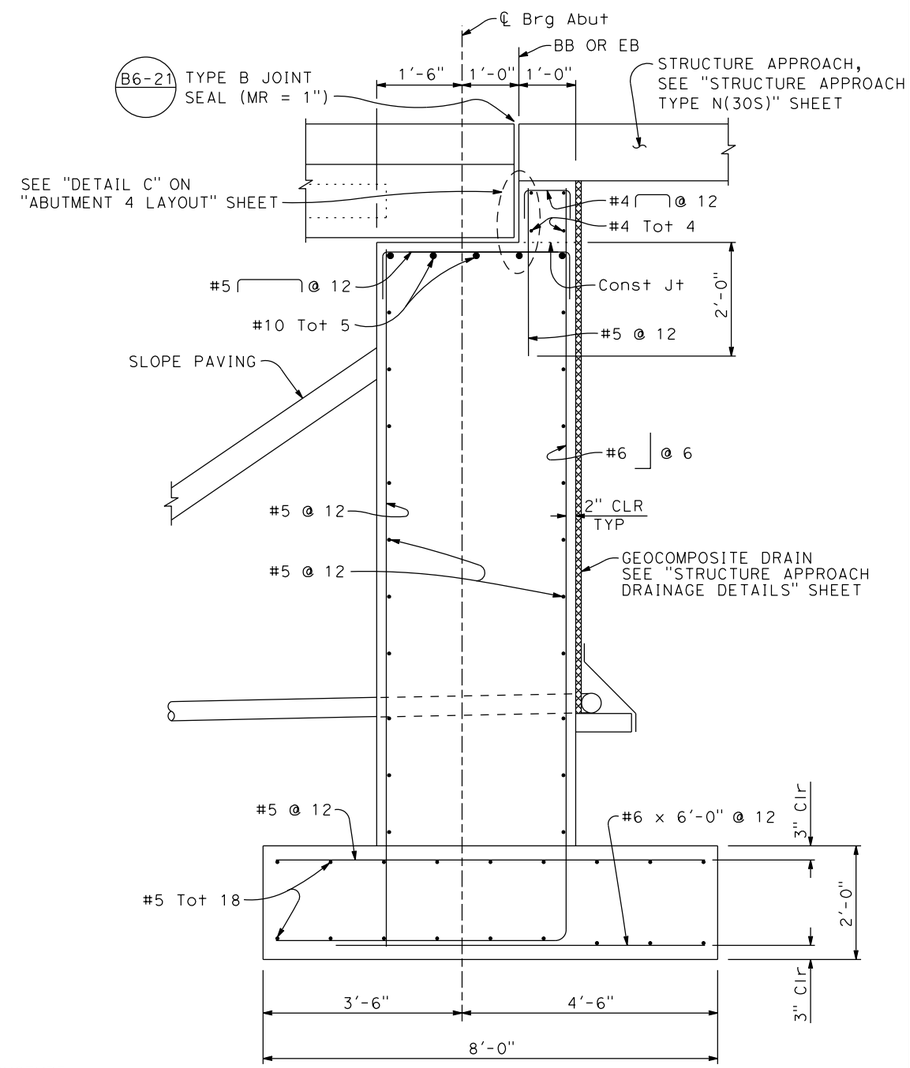

TYPICAL SECTION

3/4" = 1'-0"

DESIGN OVERSIGHT	DESIGN	BY T. Osterkamp	CHECKED M. Iley	PREPARED FOR THE CITY OF VICTORVILLE	T. Osterkamp PROJECT ENGINEER
SIGN OFF DATE	DETAILS	BY R. Liptak	CHECKED M. Iley		BRIDGE NO. 54C0547
	QUANTITIES	BY R. Liptak / F. Enriquez	CHECKED M. Iley		POST MILES

BEAR VALLEY ROAD OVERHEAD

ABUTMENT 1 LAYOUT

DESIGN DETAIL SHEET (ENGLISH) (REV. 03/14/12)

ORIGINAL SCALE IN INCHES FOR REDUCED PLANS 0 1 2 3

UNIT:
PROJECT NUMBER & PHASE: CONTRACT NO.:

DISREGARD PRINTS BEARING EARLIER REVISION DATES

REVISION DATES: X

SHEET 5 OF 24

FILE => J:\2007_Bear_Vly_BR_Widen\517\2007AL1.dgn

USERNAME => untitled DATE PLOTTED => 12/3/2018 TIME PLOTTED => 11:51:21 PM

DIST	COUNTY	ROUTE	POST MILES TOTAL PROJECT	SHEET No	TOTAL SHEETS
08	SB	CR		63	81

REGISTERED CIVIL ENGINEER DATE

PLANS APPROVAL DATE

The State of California or its officers or agents shall not be responsible for the accuracy or completeness of scanned copies of this plan sheet.

REGISTERED PROFESSIONAL ENGINEER T. OSTERKAMP No. C46783 Exp. 6/30/19 CIVIL STATE OF CALIFORNIA

DOKKEN ENGINEERING
110 BLUE RAVINE ROAD, SUITE 200
FOLSOM, CA 95630

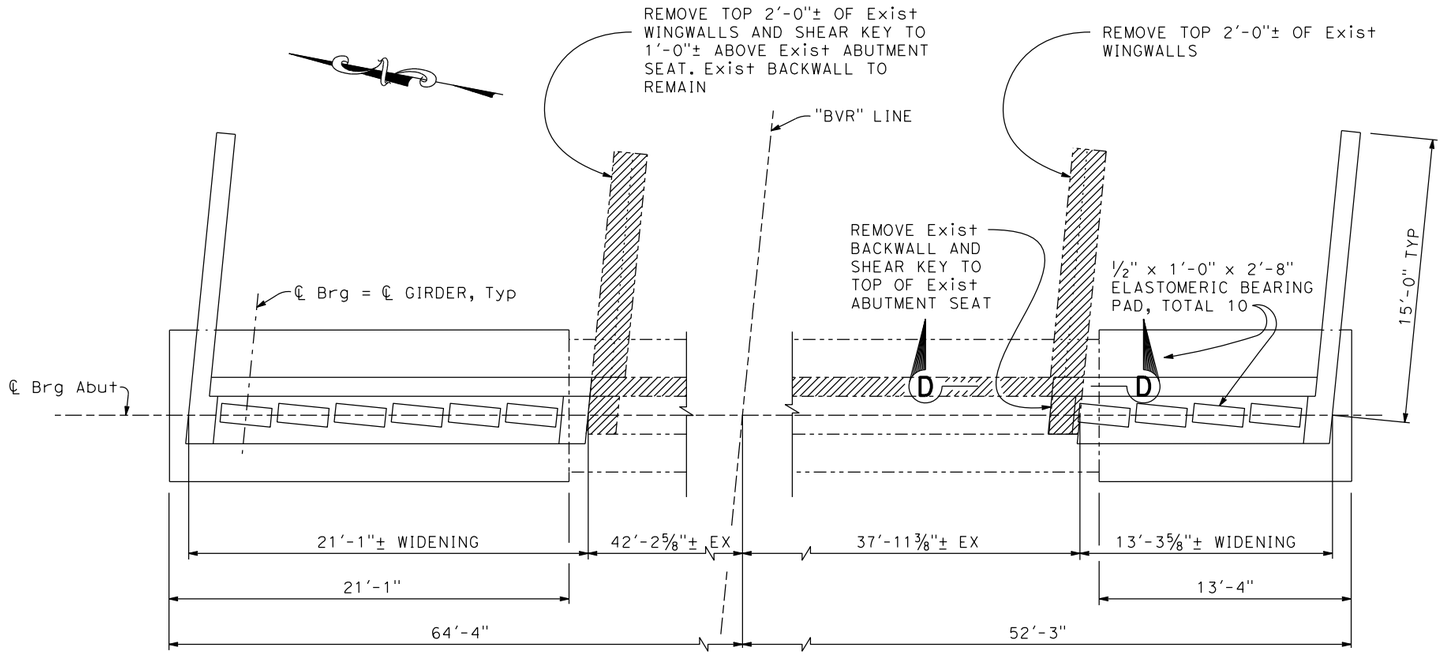

PLAN

¼" = 1'-0"

(FOR SECTION D-D, SEE "ABUTMENT DETAILS" SHEET)

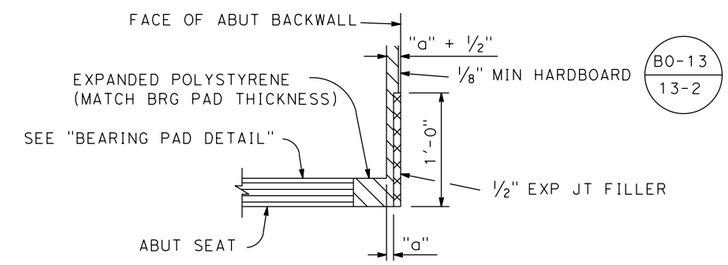

DETAIL C

NO SCALE

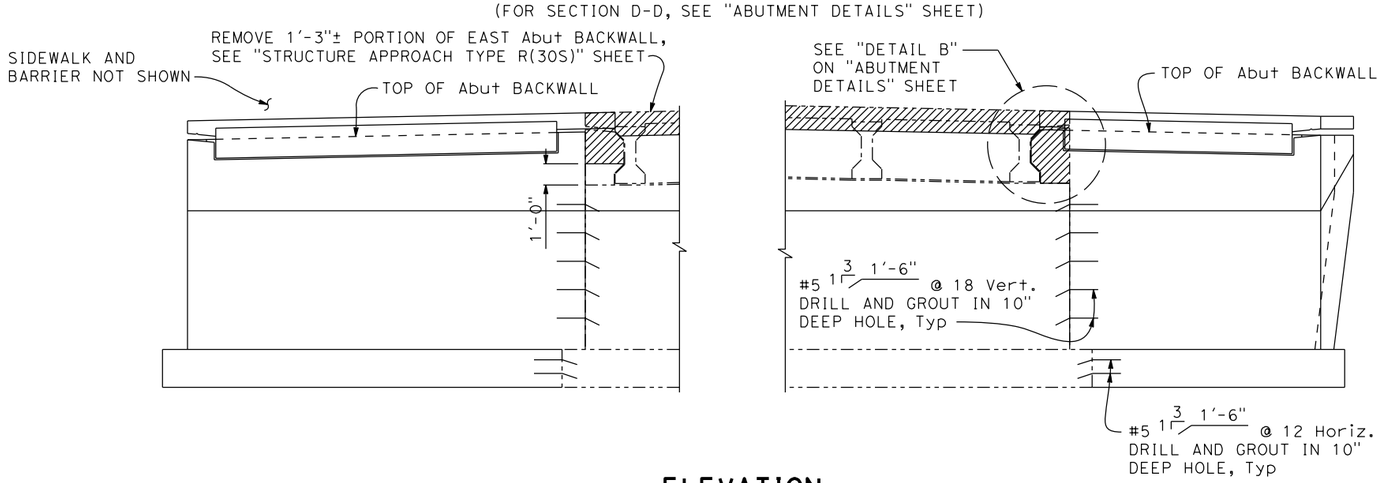

ELEVATION

¼" = 1'-0"

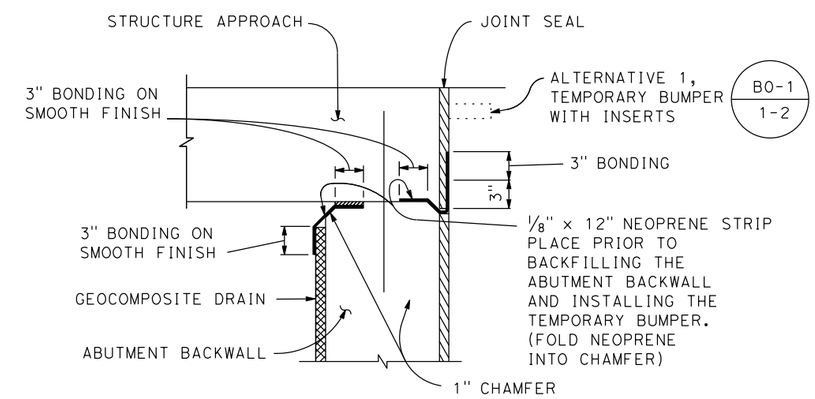

JOINT PROTECTION DETAIL

NO SCALE

LEGEND:

- - - - - - DENOTES EX STRUCTURE

DENOTES CONCRETE REMOVAL

DESIGN	BY T. Osterkamp	CHECKED M. Iley	
DETAILS	BY R. Liptak	CHECKED M. Iley	
QUANTITIES	BY R. Liptak / F. Enriquez	CHECKED M. Iley	

DESIGN OVERSIGHT

SIGN OFF DATE

DESIGN DETAIL SHEET (ENGLISH) (REV. 03/14/12)

ORIGINAL SCALE IN INCHES FOR REDUCED PLANS 0 1 2 3

PREPARED FOR THE CITY OF VICTORVILLE

T. Osterkamp
PROJECT ENGINEER

BRIDGE NO. 54C0547
POST MILES

BEAR VALLEY ROAD OVERHEAD
ABUTMENT 4 LAYOUT

UNIT:
PROJECT NUMBER & PHASE: CONTRACT NO.:

DISREGARD PRINTS BEARING EARLIER REVISION DATES

REVISION DATES x

SHEET 6 OF 24

FILE => J:\2007_Bear_Vly_BR_Widen\517\2007AL2.dgn

USERNAME => unfilled DATE PLOTTED => 12/3/2018 TIME PLOTTED => 14:51:47 PM

DIST	COUNTY	ROUTE	POST MILES TOTAL PROJECT	SHEET No	TOTAL SHEETS
08	SB	CR		64	81

REGISTERED CIVIL ENGINEER DATE

PLANS APPROVAL DATE

The State of California or its officers or agents shall not be responsible for the accuracy or completeness of scanned copies of this plan sheet.

REGISTERED PROFESSIONAL ENGINEER T. OSTERKAMP No. C46783 Exp. 6/30/19 CIVIL STATE OF CALIFORNIA

DOKKEN ENGINEERING
110 BLUE RAVINE ROAD, SUITE 200
FOLSOM, CA 95630

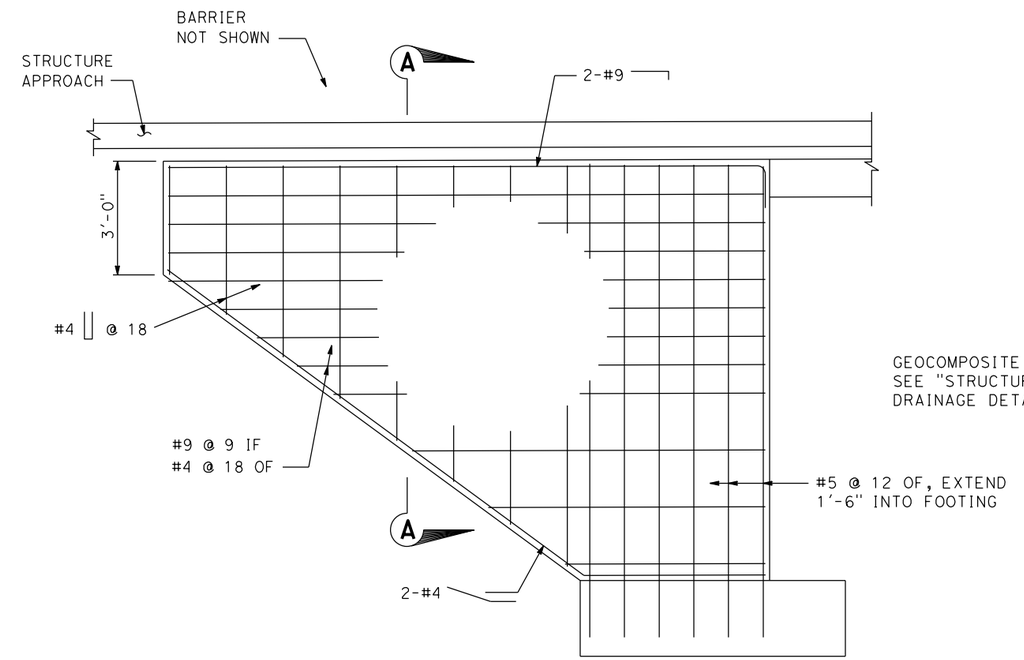

WINGWALL ELEVATION

1/2" = 1'-0"

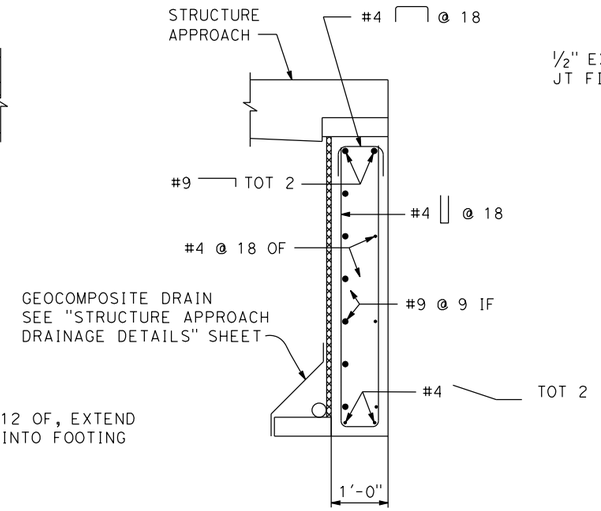

SECTION A-A

3/4" = 1'-0"

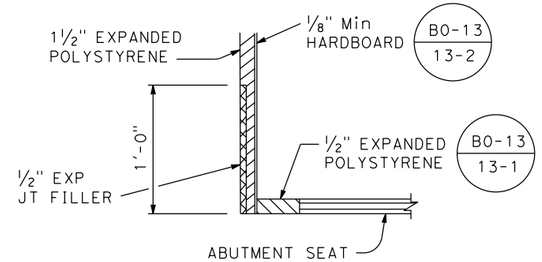

DETAIL A

NO SCALE

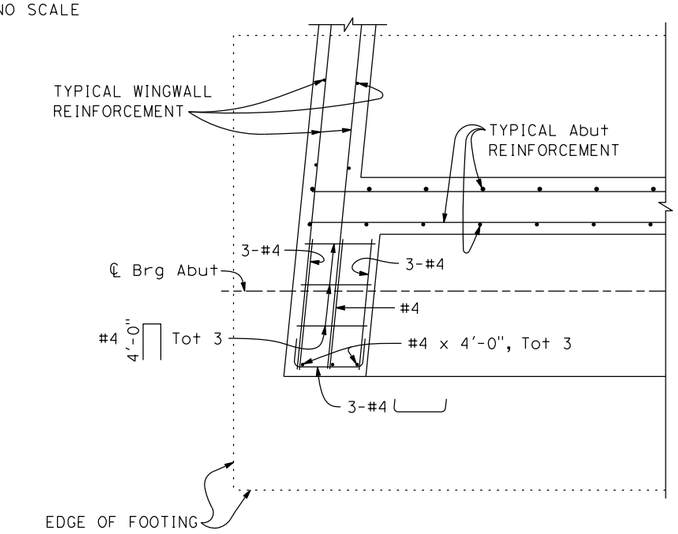

SECTION B-B

3/4" = 1'-0"

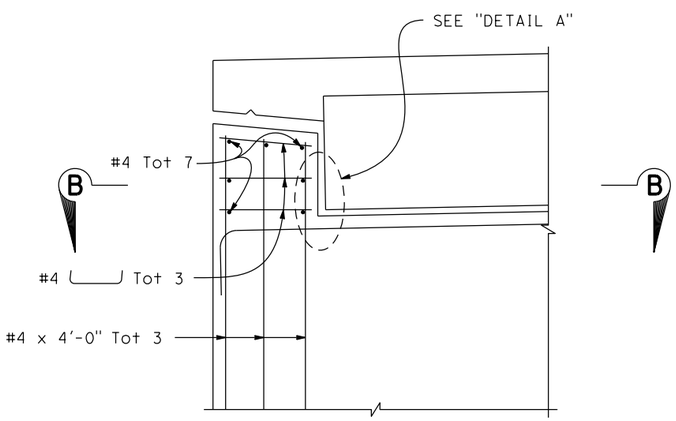

EXTERNAL SHEAR KEY

1" = 1'-0"

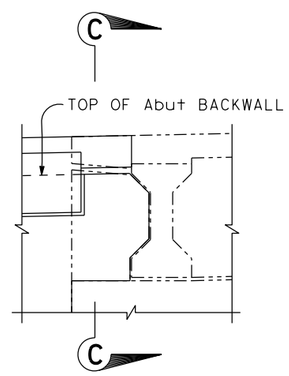

DETAIL B

1/2" = 1'-0"

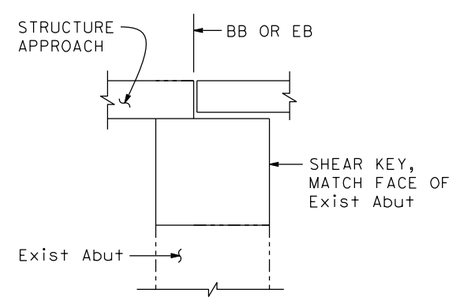

SECTION C-C

1/2" = 1'-0"

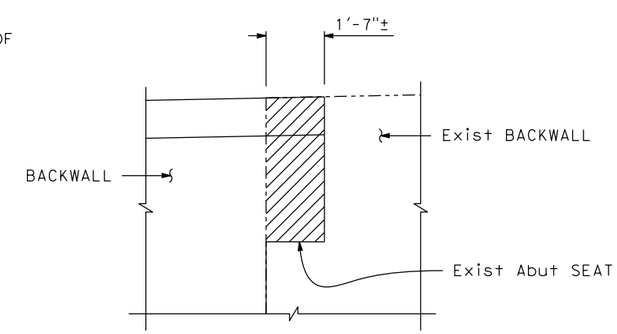

SECTION D-D

1/2" = 1'-0"

DESIGN OVERSIGHT			
SIGN OFF DATE			
DESIGN	BY T. Osterkamp	CHECKED M. Iley	
DETAILS	BY R. Liptak	CHECKED M. Iley	
QUANTITIES	BY R. Liptak / F. Enriquez	CHECKED M. Iley	

PREPARED FOR THE
CITY OF VICTORVILLE

T. Osterkamp
PROJECT ENGINEER

BRIDGE NO. 54C0547
POST MILES

BEAR VALLEY ROAD OVERHEAD
ABUTMENT DETAILS

DESIGN DETAIL SHEET (ENGLISH) (REV. 03/14/12)

ORIGINAL SCALE IN INCHES FOR REDUCED PLANS 0 1 2 3

UNIT:
PROJECT NUMBER & PHASE:
CONTRACT NO.:

DISREGARD PRINTS BEARING EARLIER REVISION DATES

REVISION DATES: x

SHEET 7 OF 24

FILE => J:\2007_Bear_Vly_BR_Widen\517\2007AD1.dgn

USERNAME => untitled DATE PLOTTED => 12/3/2018 TIME PLOTTED => 11:52:09 PM

DIST	COUNTY	ROUTE	POST MILES TOTAL PROJECT	SHEET No	TOTAL SHEETS
08	SB	CR		65	81

REGISTERED CIVIL ENGINEER DATE

PLANS APPROVAL DATE

REGISTERED PROFESSIONAL ENGINEER T. OSTERKAMP No. C46783 Exp. 6/30/19 CIVIL STATE OF CALIFORNIA

The State of California or its officers or agents shall not be responsible for the accuracy or completeness of scanned copies of this plan sheet.

DOKKEN ENGINEERING
110 BLUE RAVINE ROAD, SUITE 200
FOLSOM, CA 95630

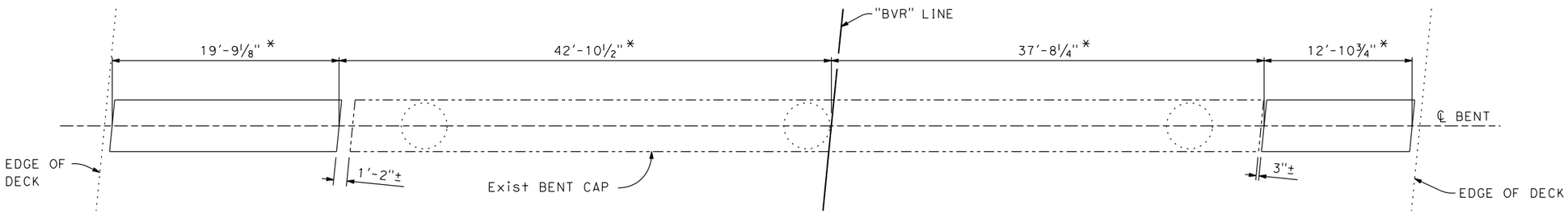

* MEASURED ALONG ℄ BENT

SECTION A-A

3/16" = 1'-0"

NOTES:

1. For Sections B-B, C-C, and D-D, see "BENT LAYOUT NO. 2" sheet.

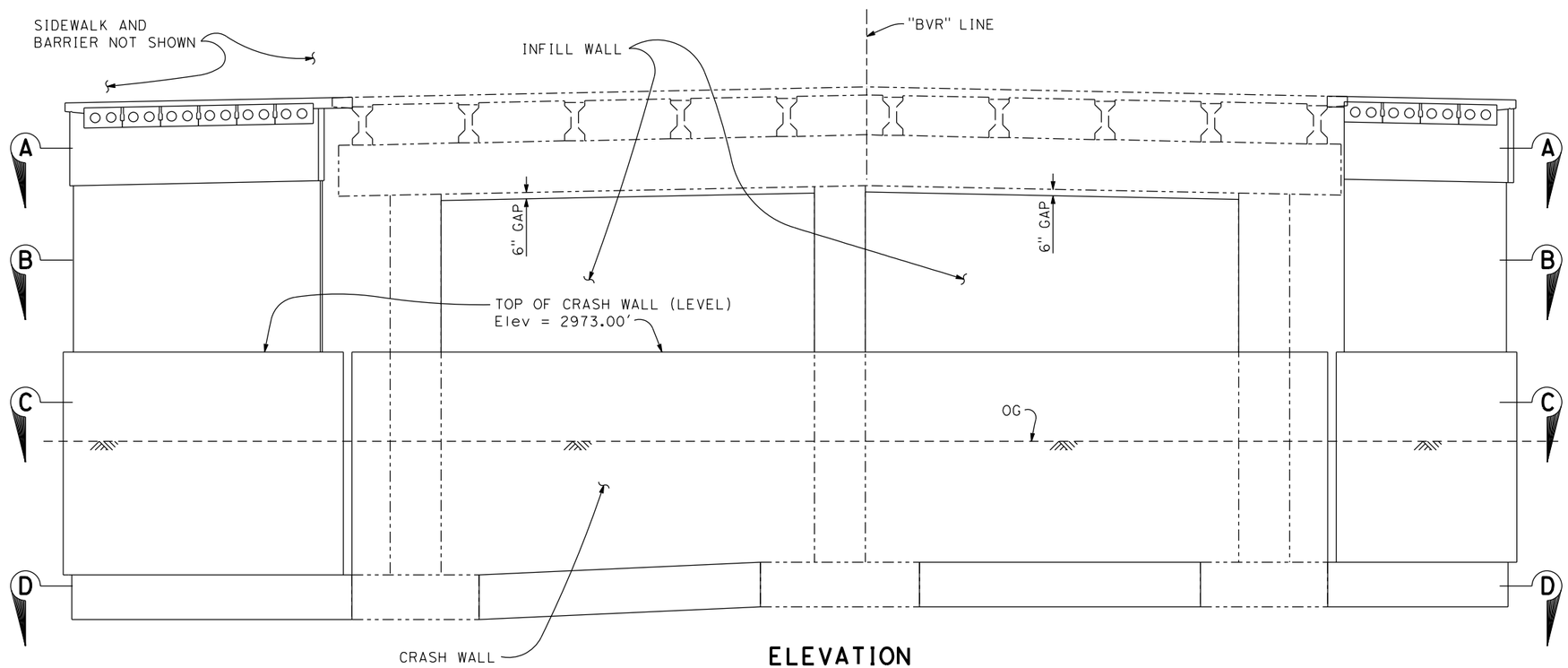

ELEVATION

3/16" = 1'-0"

BENT 2 SHOWN, MIRROR BENT 3 SIMILAR.

LEGEND

——-——- DENOTES EX STRUCTURE

DESIGN OVERSIGHT	DESIGN	BY T. Osterkamp	CHECKED M. Iley	PREPARED FOR THE CITY OF VICTORVILLE
SIGN OFF DATE	DETAILS	BY R. Liptak	CHECKED M. Iley	
	QUANTITIES	BY R. Liptak / F. Enriquez	CHECKED M. Iley	

T. Osterkamp
PROJECT ENGINEER

BRIDGE NO. 54C0547
POST MILES

BEAR VALLEY ROAD OVERHEAD
BENT LAYOUT NO. 1

DESIGN DETAIL SHEET (ENGLISH) (REV. 03/14/12)

ORIGINAL SCALE IN INCHES FOR REDUCED PLANS 0 1 2 3

UNIT:
PROJECT NUMBER & PHASE: CONTRACT NO.:

DISREGARD PRINTS BEARING EARLIER REVISION DATES

REVISION DATES x

SHEET 8 OF 24

FILE => J:\2007_Bear_Vly_BR_Widen\517\2007BL1.dgn

USERNAME => untitled DATE PLOTTED => 12/3/2018 TIME PLOTTED => 11:52:34 PM

DIST	COUNTY	ROUTE	POST MILES TOTAL PROJECT	SHEET No	TOTAL SHEETS
08	SB	CR		66	81

REGISTERED CIVIL ENGINEER DATE

PLANS APPROVAL DATE

REGISTERED PROFESSIONAL ENGINEER T. OSTERKAMP No. C46783 Exp. 6/30/19 CIVIL STATE OF CALIFORNIA

The State of California or its officers or agents shall not be responsible for the accuracy or completeness of scanned copies of this plan sheet.

DOKKEN ENGINEERING
110 BLUE RAVINE ROAD, SUITE 200
FOLSOM, CA 95630

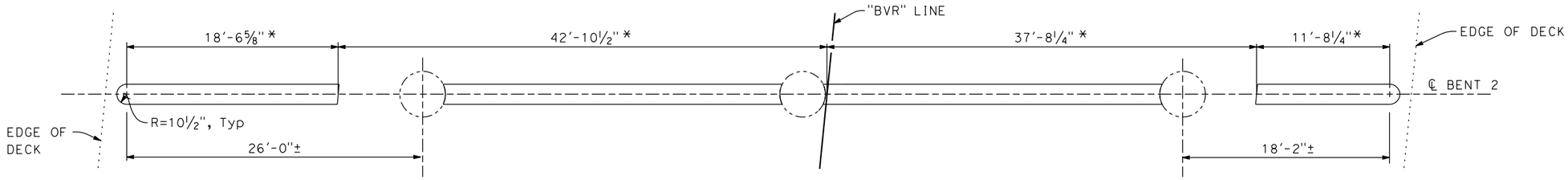

SECTION B-B

3/16" = 1'-0"

* MEASURED ALONG ℄ BENT

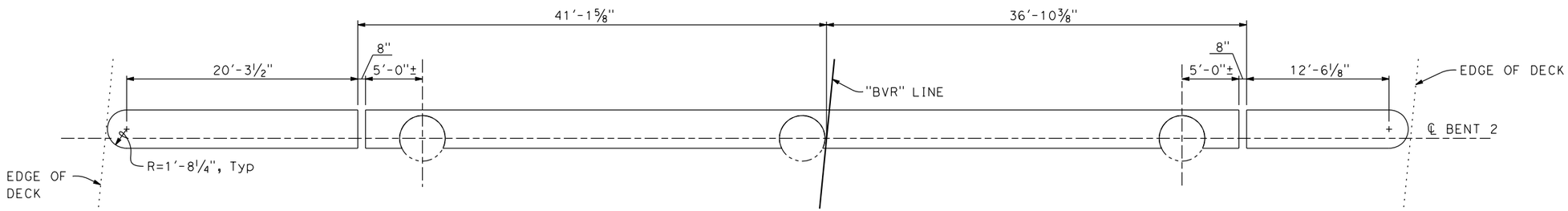

SECTION C-C

3/16" = 1'-0"

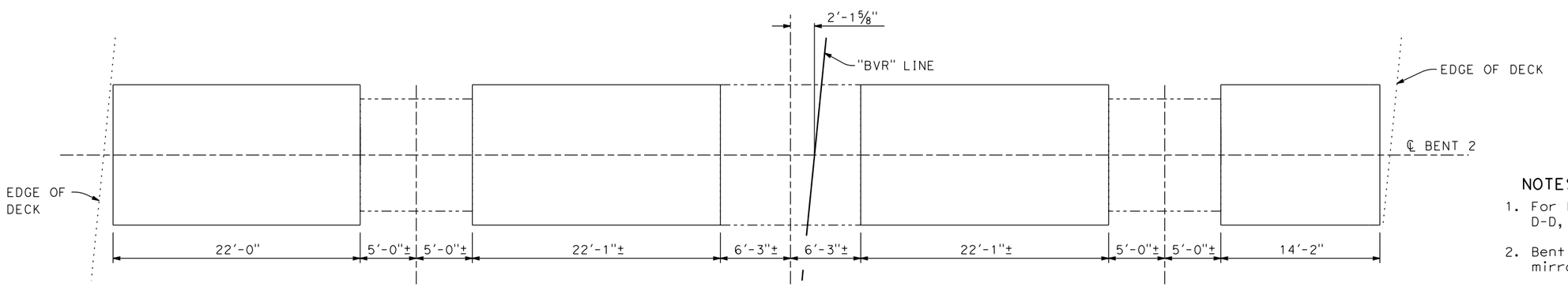

SECTION D-D

3/16" = 1'-0"

NOTES:

1. For location of Sections B-B, C-C, and D-D, see "BENT LAYOUT NO. 1" sheet.
2. Bent 2 shown, Bent 3 similar and mirror about ℄ bent.

LEGEND

—·—·— DENOTES Exist STRUCTURE

DESIGN	BY T. Osterkamp	CHECKED M. Iley	
DETAILS	BY R. Liptak	CHECKED M. Iley	
QUANTITIES	BY R. Liptak / F. Enriquez	CHECKED M. Iley	

DESIGN OVERSIGHT

SIGN OFF DATE

PREPARED FOR THE CITY OF VICTORVILLE

T. Osterkamp
PROJECT ENGINEER

BRIDGE NO. 54C0547
POST MILES

BEAR VALLEY ROAD OVERHEAD
BENT LAYOUT NO. 2

DESIGN DETAIL SHEET (ENGLISH) (REV. 03/14/12)

ORIGINAL SCALE IN INCHES FOR REDUCED PLANS 0 1 2 3

UNIT:
PROJECT NUMBER & PHASE:
CONTRACT NO.:

DISREGARD PRINTS BEARING EARLIER REVISION DATES

REVISION DATES: x

SHEET 9 OF 24

FILE => J:\2007_Bear_Vly_BR_Widen\517\2007BL2.dgn

USERNAME => untitled DATE PLOTTED => 12/3/2018 TIME PLOTTED => 11:52:53 PM

DIST	COUNTY	ROUTE	POST MILES TOTAL PROJECT	SHEET No	TOTAL SHEETS
08	SB	CR		67	81

REGISTERED CIVIL ENGINEER DATE

PLANS APPROVAL DATE

REGISTERED PROFESSIONAL ENGINEER T. OSTERKAMP No. C46783 Exp. 6/30/19 CIVIL STATE OF CALIFORNIA

The State of California or its officers or agents shall not be responsible for the accuracy or completeness of scanned copies of this plan sheet.

DOKKEN ENGINEERING
110 BLUE RAVINE ROAD, SUITE 200
FOLSOM, CA 95630

LEGEND

—·—·—·— DENOTES EXIST STRUCTURE

NOTES:

1. For Sections A-A and B-B, see "BENT DETAILS NO. 2" sheet.
2. For Sections C-C, D-D, E-E, F-F, G-G and H-H, see "BENT DETAILS NO. 3" sheet.

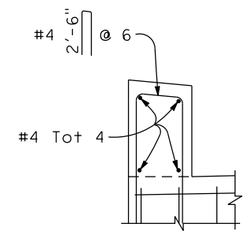

DETAIL A

1" = 1'-0"

LEFT EDGE SHOWN, RIGHT EDGE SIMILAR.

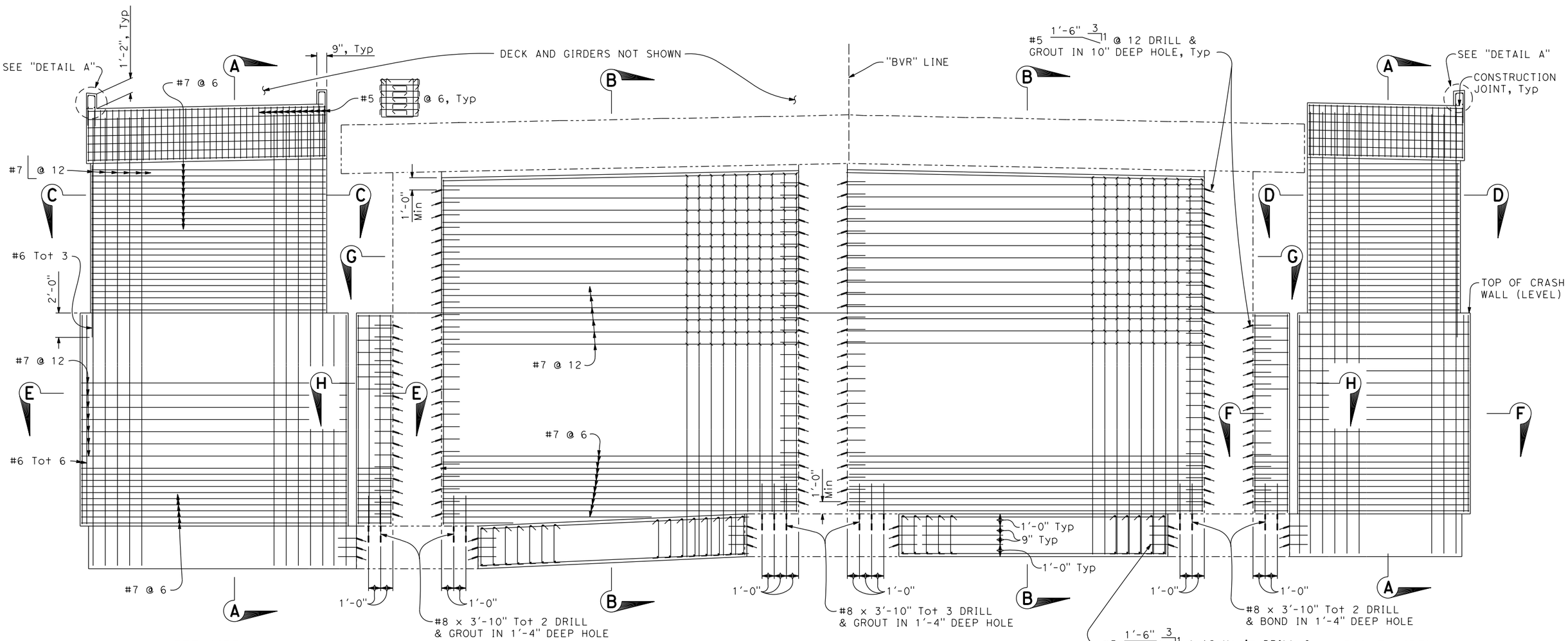

BENT ELEVATION

1/4" = 1'-0"

BENT 2 SHOWN, BENT 3 SIMILAR.

DESIGN	BY T. Osterkamp	CHECKED M. Iley	
DETAILS	BY R. Liptak	CHECKED M. Iley	
QUANTITIES	BY R. Liptak / F. Enriquez	CHECKED M. Iley	

DESIGN OVERSIGHT

SIGN OFF DATE

PREPARED FOR THE CITY OF VICTORVILLE

T. Osterkamp
PROJECT ENGINEER

BRIDGE NO. 54C0547
POST MILES

BEAR VALLEY ROAD OVERHEAD
BENT DETAILS NO. 1

DESIGN DETAIL SHEET (ENGLISH) (REV. 03/14/12)

ORIGINAL SCALE IN INCHES FOR REDUCED PLANS 0 1 2 3

UNIT:
PROJECT NUMBER & PHASE: CONTRACT NO.:

DISREGARD PRINTS BEARING EARLIER REVISION DATES

REVISION DATES: X

SHEET 10 OF 24

FILE => J:\2007_Bear_Vly_BR_Widen\517\2007BD1.dgn

USERNAME => unittled DATE PLOTTED => 12/3/2018 TIME PLOTTED => 11:53:10 PM

DIST	COUNTY	ROUTE	POST MILES TOTAL PROJECT	SHEET No	TOTAL SHEETS
08	SB	CR		68	81

REGISTERED CIVIL ENGINEER DATE

PLANS APPROVAL DATE

REGISTERED PROFESSIONAL ENGINEER T. OSTERKAMP No. C46783 Exp. 6/30/19 CIVIL STATE OF CALIFORNIA

The State of California or its officers or agents shall not be responsible for the accuracy or completeness of scanned copies of this plan sheet.

DOKKEN ENGINEERING
110 BLUE RAVINE ROAD, SUITE 200
FOLSOM, CA 95630

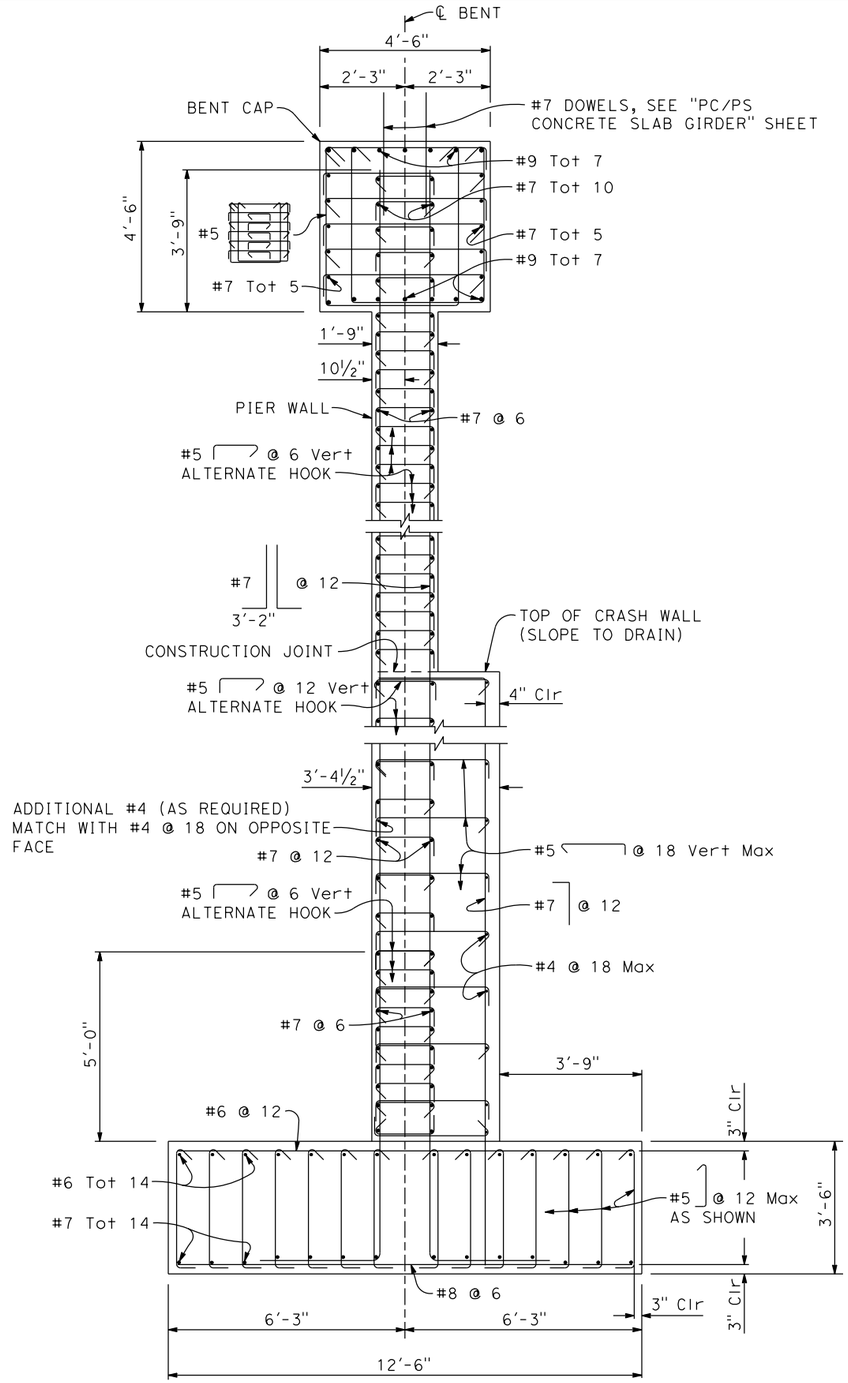

SECTION A-A

½" = 1'-0"

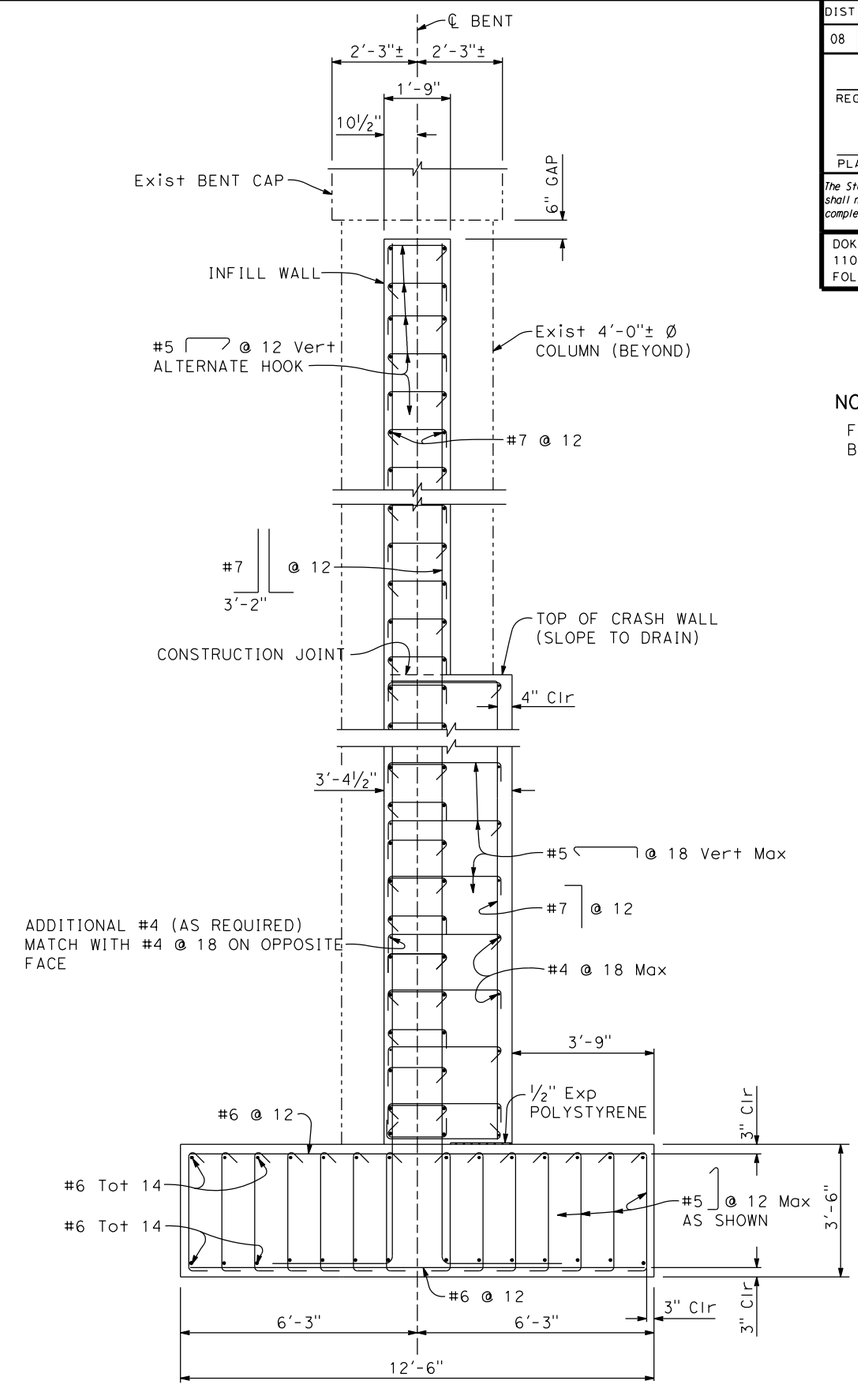

SECTION B-B

½" = 1'-0"

NOTE:

For location of Sections A-A and B-B, see "BENT DETAILS NO. 1" sheet.

LEGEND

——-——-— DENOTES EXIST STRUCTURE

DESIGN OVERSIGHT

SIGN OFF DATE

	BY	CHECKED
DESIGN	T. Osterkamp	M. Iley
DETAILS	R. Liptak	M. Iley
QUANTITIES	R. Liptak / F. Enriquez	M. Iley

PREPARED FOR THE CITY OF VICTORVILLE

T. Osterkamp
PROJECT ENGINEER

BRIDGE NO. 54C0547
POST MILES

BEAR VALLEY ROAD OVERHEAD
BENT DETAILS NO. 2

DESIGN DETAIL SHEET (ENGLISH) (REV. 03/14/12)

ORIGINAL SCALE IN INCHES FOR REDUCED PLANS 0 1 2 3

UNIT:
PROJECT NUMBER & PHASE: CONTRACT NO.:

DISREGARD PRINTS BEARING EARLIER REVISION DATES

REVISION DATES x

SHEET 11 OF 24

FILE => J:\2007_Bear_Vly_BR_Widen\517\2007BD2.dgn

USERNAME => unfitted DATE PLOTTED => 12/3/2018 TIME PLOTTED => 11:53:23 PM

DIST	COUNTY	ROUTE	POST MILES TOTAL PROJECT	SHEET No	TOTAL SHEETS
08	SB	CR		69	81

REGISTERED CIVIL ENGINEER DATE

PLANS APPROVAL DATE

The State of California or its officers or agents shall not be responsible for the accuracy or completeness of scanned copies of this plan sheet.

REGISTERED PROFESSIONAL ENGINEER T. OSTERKAMP No. C46783 Exp. 6/30/19 CIVIL STATE OF CALIFORNIA

DOKKEN ENGINEERING
110 BLUE RAVINE ROAD, SUITE 200
FOLSOM, CA 95630

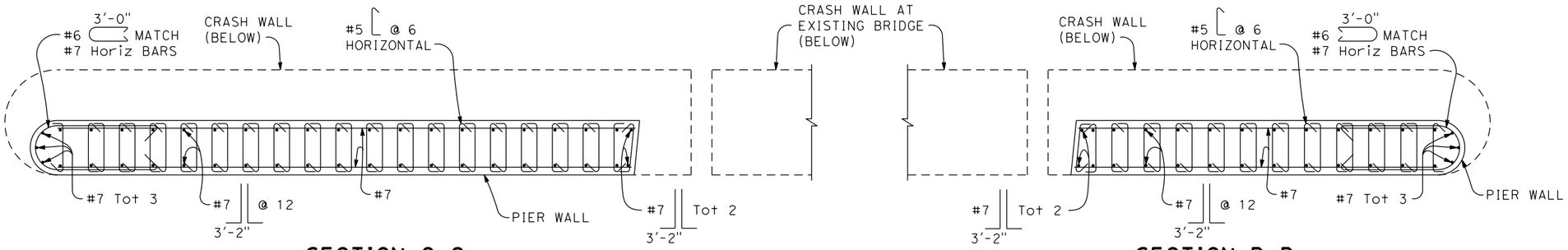

SECTION C-C

½" = 1'-0"

SECTION D-D

½" = 1'-0"

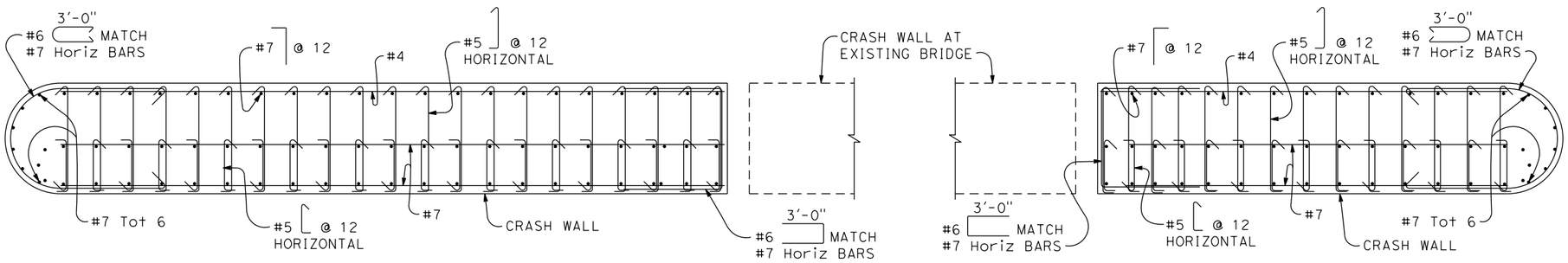

SECTION E-E

½" = 1'-0"

SECTION F-F

½" = 1'-0"

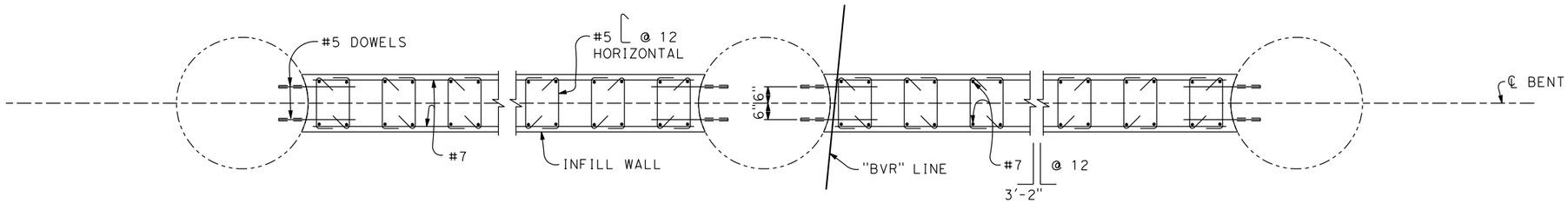

SECTION G-G

½" = 1'-0"

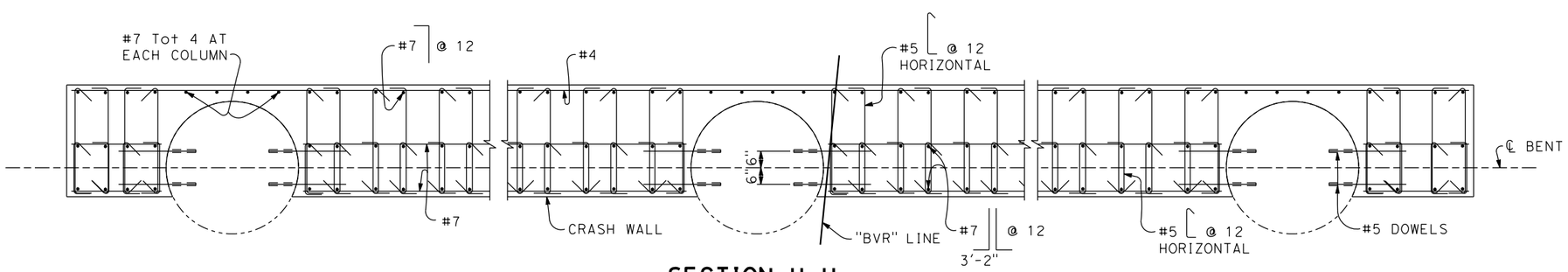

SECTION H-H

½" = 1'-0"

LEGEND

——-——- DENOTES EXIST STRUCTURE

NOTE:

For location of Sections C-C, D-D, E-E, F-F, G-G and H-H, see "BENT DETAILS NO. 1" sheet.

DESIGN OVERSIGHT

SIGN OFF DATE

	BY	CHECKED
DESIGN	T. Osterkamp	M. Iley
DETAILS	R. Liptak	M. Iley
QUANTITIES	R. Liptak / F. Enriquez	M. Iley

PREPARED FOR THE CITY OF VICTORVILLE

T. Osterkamp
PROJECT ENGINEER

BRIDGE NO. 54C0547
POST MILES

BEAR VALLEY ROAD OVERHEAD
BENT DETAILS NO. 3

DESIGN DETAIL SHEET (ENGLISH) (REV. 03/14/12)

ORIGINAL SCALE IN INCHES FOR REDUCED PLANS 0 1 2 3

UNIT:
PROJECT NUMBER & PHASE:
CONTRACT NO.:

DISREGARD PRINTS BEARING EARLIER REVISION DATES

REVISION DATES: X

SHEET 12 OF 24

FILE => J:\2007_Bear_Vly_BR_Widen\517\2007BD3.dgn

USERNAME => untitled DATE PLOTTED => 12/3/2018 TIME PLOTTED => 11:53:40 PM

DIST	COUNTY	ROUTE	POST MILES TOTAL PROJECT	SHEET No	TOTAL SHEETS
08	SB	CR		70	81

REGISTERED CIVIL ENGINEER DATE

PLANS APPROVAL DATE

The State of California or its officers or agents shall not be responsible for the accuracy or completeness of scanned copies of this plan sheet.

REGISTERED PROFESSIONAL ENGINEER T. OSTERKAMP No. C46783 Exp. 6/30/19 CIVIL STATE OF CALIFORNIA

DOKKEN ENGINEERING
110 BLUE RAVINE ROAD, SUITE 200
FOLSOM, CA 95630

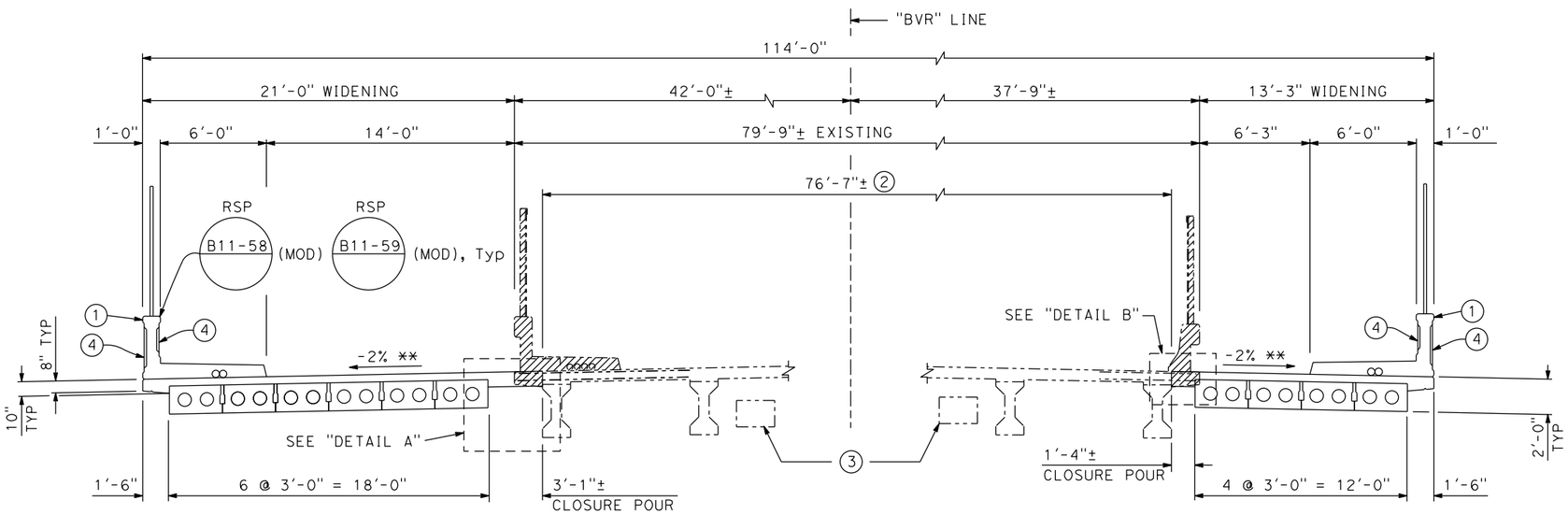

LEFT WIDEN

**MATCH EX CROSS-SLOPE, TYP

RIGHT WIDEN

TYPICAL SECTION

1/4" = 1'-0"

LEGEND:

1. CONCRETE BARRIER TYPE 732SW (MOD) W/ PICKET RAILING
2. BRIDGE DECK METHACRYLATE RESIN TREATMENT
3. 18" x 26" EX FUTURE UTILITY OPENINGS, TOT 2
4. ARCHITECTURAL TREATMENT

REMOVE EX OVERHANG, BARRIER, SIDEWALK AND RAILING. BRIDGE DECK Reinf TO REMAIN

DENOTES EX STRUCTURE

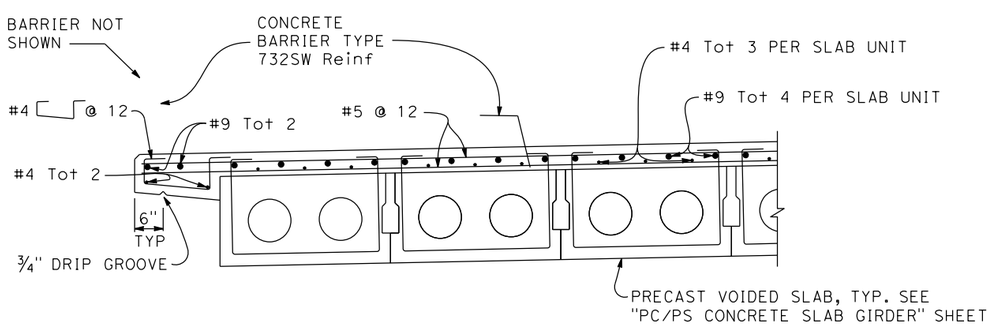

PART TYPICAL SECTION

3/4" = 1'-0"

LEFT WIDENING SHOWN, RIGHT WIDENING SIMILAR.

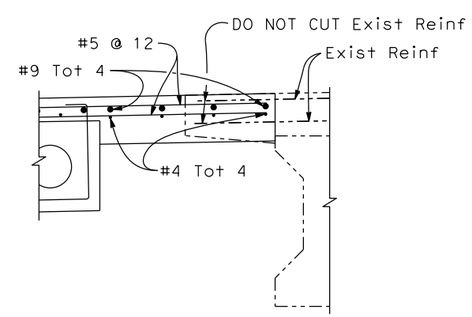

DETAIL A

3/4" = 1'-0"

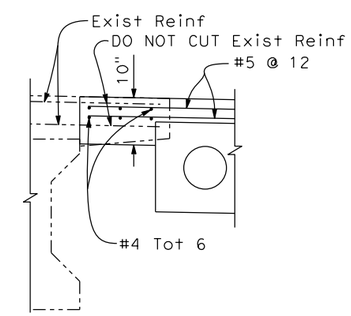

DETAIL B

3/4" = 1'-0"

DESIGN OVERSIGHT	DESIGN	BY T. Osterkamp	CHECKED M. Iley	PREPARED FOR THE CITY OF VICTORVILLE	T. Osterkamp PROJECT ENGINEER
SIGN OFF DATE	DETAILS	BY R. Liptak	CHECKED M. Iley		BRIDGE NO. 54C0547
	QUANTITIES	BY R. Liptak / F. Enriquez	CHECKED M. Iley		POST MILES

BEAR VALLEY ROAD OVERHEAD

TYPICAL SECTION

DESIGN DETAIL SHEET (ENGLISH) (REV. 03/14/12)

ORIGINAL SCALE IN INCHES FOR REDUCED PLANS 0 1 2 3

UNIT:
PROJECT NUMBER & PHASE: CONTRACT NO.:

DISREGARD PRINTS BEARING EARLIER REVISION DATES

REVISION DATES: X

SHEET 13 OF 24

FILE => J:\2007_Bear_Vly_BR_Widen\517\2007TS.dgn

USERNAME => untitled DATE PLOTTED => 12/3/2018 TIME PLOTTED => 11:54:17 PM

DIST	COUNTY	ROUTE	POST MILES TOTAL PROJECT	SHEET No	TOTAL SHEETS
08	SB	CR		71	81

REGISTERED CIVIL ENGINEER DATE

PLANS APPROVAL DATE

REGISTERED PROFESSIONAL ENGINEER
T. OSTERKAMP
No. C46783
Exp. 6/30/19
CIVIL
STATE OF CALIFORNIA

The State of California or its officers or agents shall not be responsible for the accuracy or completeness of scanned copies of this plan sheet.

DOKKEN ENGINEERING
110 BLUE RAVINE ROAD, SUITE 200
FOLSOM, CA 95630

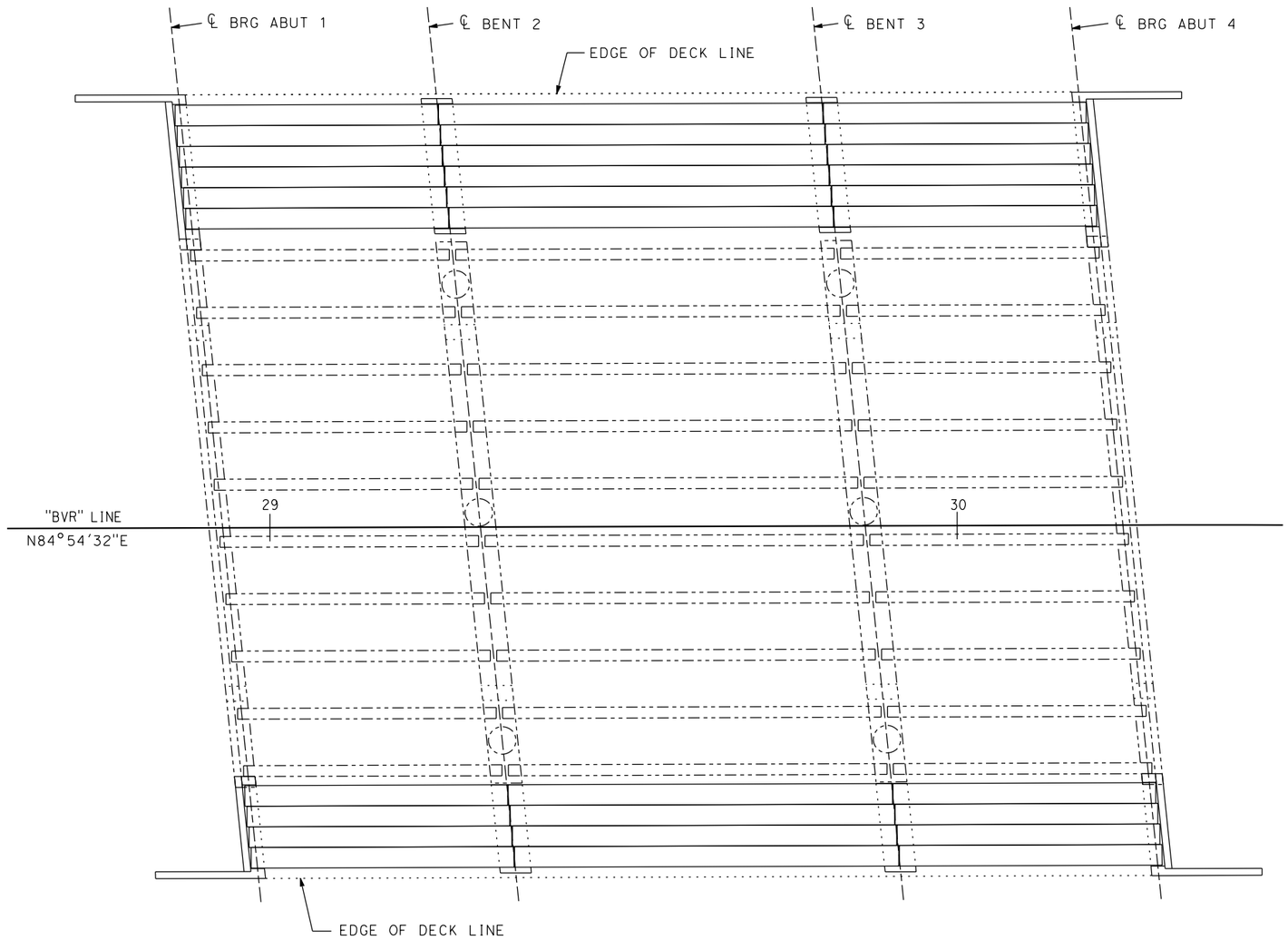

PLAN

1" = 10'

DESIGN	BY T. Osterkamp	CHECKED M. Iley	
DETAILS	BY R. Liptak	CHECKED M. Iley	
QUANTITIES	BY R. Liptak / F. Enriquez	CHECKED M. Iley	

DESIGN OVERSIGHT

SIGN OFF DATE

PREPARED FOR THE CITY OF VICTORVILLE

T. Osterkamp
PROJECT ENGINEER

BRIDGE NO. 54C0547
POST MILES

BEAR VALLEY ROAD OVERHEAD
GIRDER LAYOUT

DESIGN DETAIL SHEET (ENGLISH) (REV. 03/14/12)

ORIGINAL SCALE IN INCHES FOR REDUCED PLANS 0 1 2 3

UNIT:
PROJECT NUMBER & PHASE: CONTRACT NO.:

DISREGARD PRINTS BEARING EARLIER REVISION DATES

REVISION DATES: x

SHEET 14 OF 24

FILE => J:\2007_Bear_Vly_BR_Widen\517\2007GL01.dgn

USERNAME => unfitled DATE PLOTTED => 12/3/2018 TIME PLOTTED => 2:00:25 PM

DIST	COUNTY	ROUTE	POST MILES TOTAL PROJECT	SHEET No	TOTAL SHEETS
08	SB	CR		72	81

REGISTERED CIVIL ENGINEER DATE

PLANS APPROVAL DATE

REGISTERED PROFESSIONAL ENGINEER T. OSTERKAMP No. C46783 Exp. 6/30/19 CIVIL STATE OF CALIFORNIA

The State of California or its officers or agents shall not be responsible for the accuracy or completeness of scanned copies of this plan sheet.

DOKKEN ENGINEERING
110 BLUE RAVINE ROAD, SUITE 200
FOLSOM, CA 95630

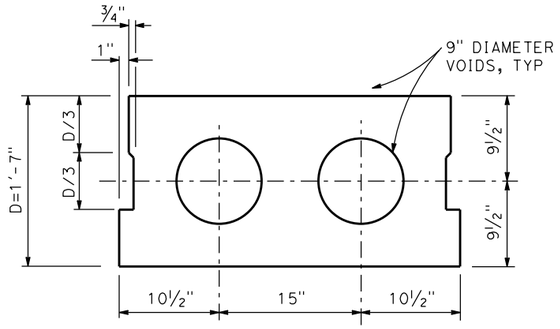

TYPICAL SECTION - INTERIOR GIRDER

NO SCALE

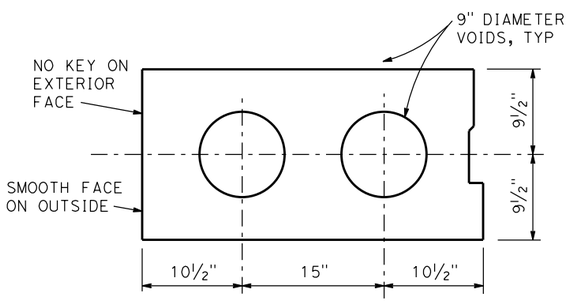

TYPICAL SECTION - EXTERIOR GIRDER

NO SCALE

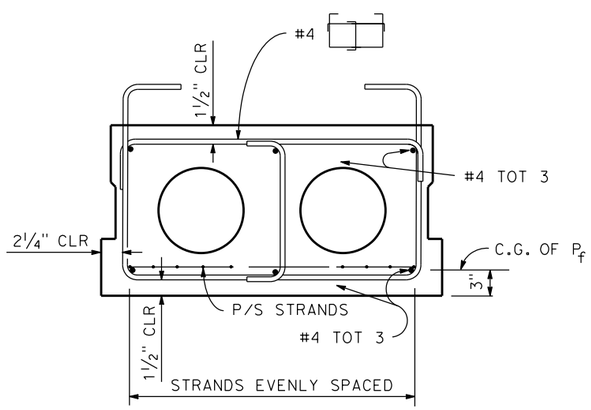

TYPICAL REINFORCEMENT

NO SCALE

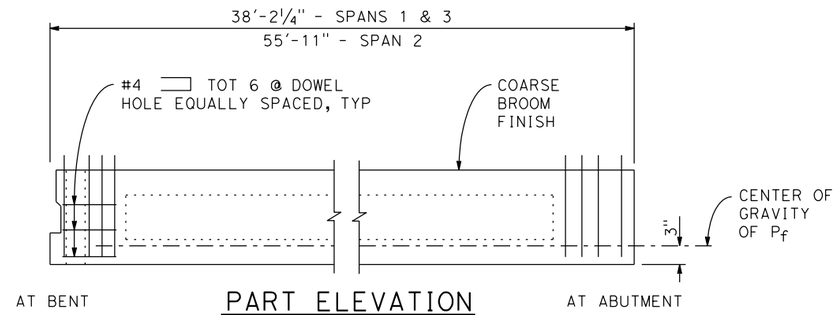

PART ELEVATION

NO SCALE

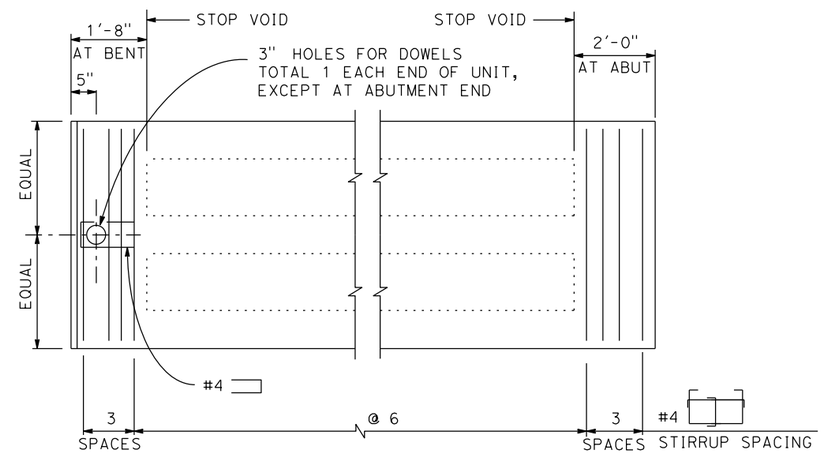

PART PLAN

NO SCALE

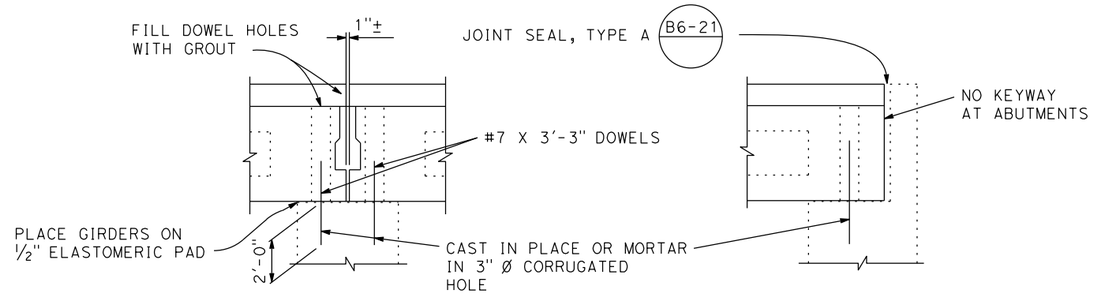

AT BENTS AT ABUTMENTS

SUPPORT DETAILS

NO SCALE

GENERAL NOTES

1. P_f IS THE FORCE REQUIRED AT CENTER OF SPAN AFTER ALL LOSSES.
2. SLABS DESIGNED FOR PRETENSIONING.
3. KEYWAYS TO BE FILLED WITH GROUT.

GIRDER LOCATION OR DESIGNATION AND LENGTH	JACKING FORCE (P_f) IN Kips	CONCRETE STRENGTH (ksi)	
		f'_{ci}	f'_c
SPANS 1 & 3 38'-0"	410	4.0	6.0
SPAN 2 55'-9 1/2"	450	4.0	6.0

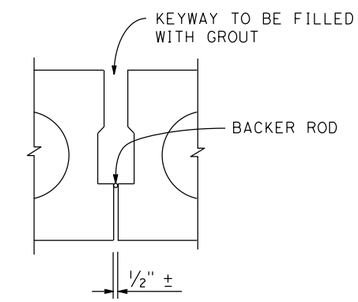

KEYWAY DETAIL

NO SCALE

DESIGN	BY T. Osterkamp	CHECKED M. Iley	
DETAILS	BY R. Liptak	CHECKED M. Iley	
QUANTITIES	BY R. Liptak / F. Enriquez	CHECKED M. Iley	

DESIGN OVERSIGHT

SIGN OFF DATE

PREPARED FOR THE CITY OF VICTORVILLE

T. Osterkamp
PROJECT ENGINEER

BRIDGE NO. 54C0547
POST MILES

BEAR VALLEY ROAD OVERHEAD
PC/PS CONCRETE SLAB GIRDER

DESIGN DETAIL SHEET (ENGLISH) (REV. 03/14/12)

ORIGINAL SCALE IN INCHES FOR REDUCED PLANS 0 1 2 3

UNIT:
PROJECT NUMBER & PHASE: CONTRACT NO.:

DISREGARD PRINTS BEARING EARLIER REVISION DATES

REVISION DATES x

SHEET 15 OF 24

FILE => J:\2007_Bear_Vly_BR_Widen\517\2007SLAB.dgn

USERNAME => unfitted DATE PLOTTED => 12/3/2018 TIME PLOTTED => 11:55:11 PM

DIST	COUNTY	ROUTE	POST MILES TOTAL PROJECT	SHEET No	TOTAL SHEETS
08	SB	CR		73	81

REGISTERED CIVIL ENGINEER DATE

PLANS APPROVAL DATE

REGISTERED PROFESSIONAL ENGINEER
T. OSTERKAMP
No. C46783
Exp. 6/30/19
CIVIL
STATE OF CALIFORNIA

The State of California or its officers or agents shall not be responsible for the accuracy or completeness of scanned copies of this plan sheet.

DOKKEN ENGINEERING
110 BLUE RAVINE ROAD, SUITE 200
FOLSOM, CA 95630

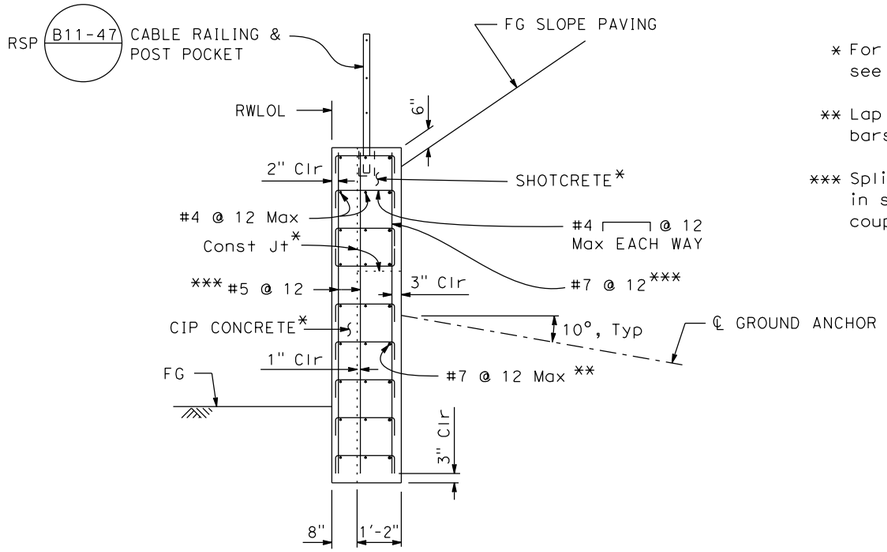

RETAINING WALL TYPICAL SECTION

1/2" = 1'-0"

* For limits of shotcrete lifts and CIP concrete, see "Retaining Wall Details No. 1" sheet.

** Lap #7 horizontal bars with #6 horizontal bars (3'-6" minimum lap)

*** Splices in vertical reinforcement at Const Jt in shotcrete shall be service spliced with mechanical couplers.

LEGEND

LIMITS OF EXCAVATION

LIMITS OF BACKFILL

—·—·— DENOTES EXIST STRUCTURE

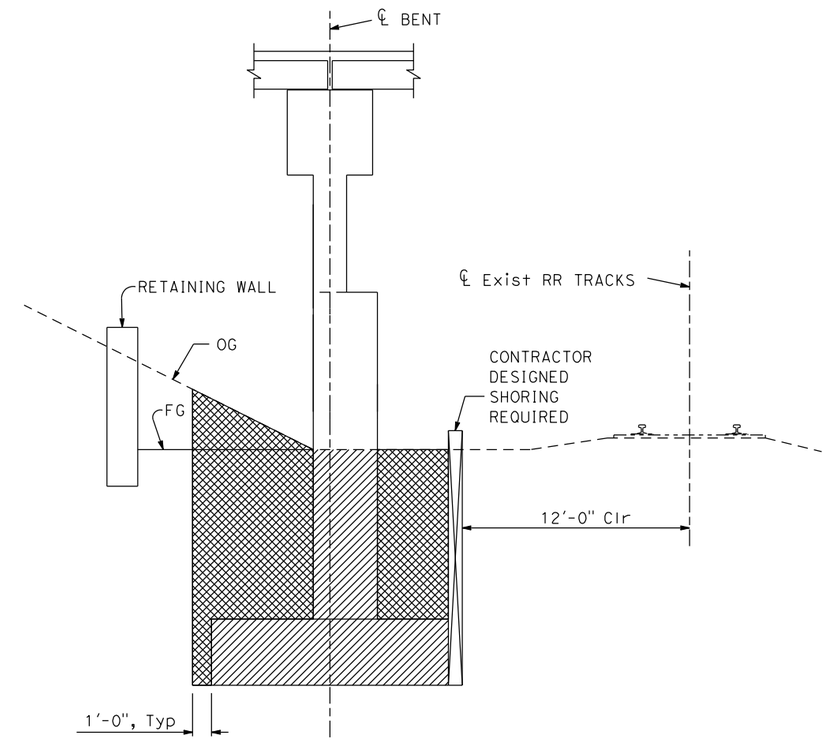

EXCAVATION & BACKFILL LIMITS

NO SCALE

DESIGN OVERSIGHT		DESIGN	BY T. Osterkamp	CHECKED M. Iley	PREPARED FOR THE CITY OF VICTORVILLE
SIGN OFF DATE		DETAILS	BY R. Liptak	CHECKED M. Iley	
		QUANTITIES	BY R. Liptak / F. Enriquez	CHECKED M. Iley	

T. Osterkamp
PROJECT ENGINEER

BRIDGE NO. 54C0547
POST MILES

BEAR VALLEY ROAD OVERHEAD
MISCELLANEOUS DETAILS

DESIGN DETAIL SHEET (ENGLISH) (REV. 03/14/12)

ORIGINAL SCALE IN INCHES FOR REDUCED PLANS 0 1 2 3

UNIT:
PROJECT NUMBER & PHASE:
CONTRACT NO.:

DISREGARD PRINTS BEARING EARLIER REVISION DATES

REVISION DATES: x

SHEET 16 OF 24

FILE => J:\2007_Bear_Vly_BR_Widen\517\2007MD1.dgn

USERNAME => untitled DATE PLOTTED => 12/3/2018 TIME PLOTTED => 11:55:34 PM

DIST	COUNTY	ROUTE	POST MILES TOTAL PROJECT	SHEET No	TOTAL SHEETS
08	SB	CR		74	81

REGISTERED CIVIL ENGINEER DATE

PLANS APPROVAL DATE

The State of California or its officers or agents shall not be responsible for the accuracy or completeness of scanned copies of this plan sheet.

REGISTERED PROFESSIONAL ENGINEER T. OSTERKAMP No. C46783 Exp. 6/30/19 CIVIL STATE OF CALIFORNIA

DOKKEN ENGINEERING
110 BLUE RAVINE ROAD, SUITE 200
FOLSOM, CA 95630

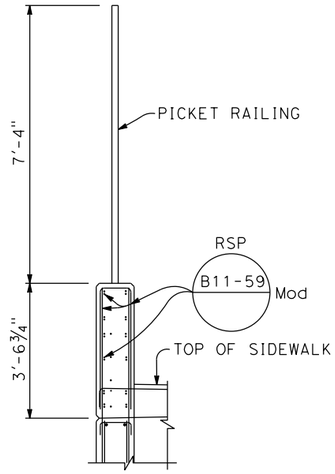

SECTION A-A

½" = 1'-0"

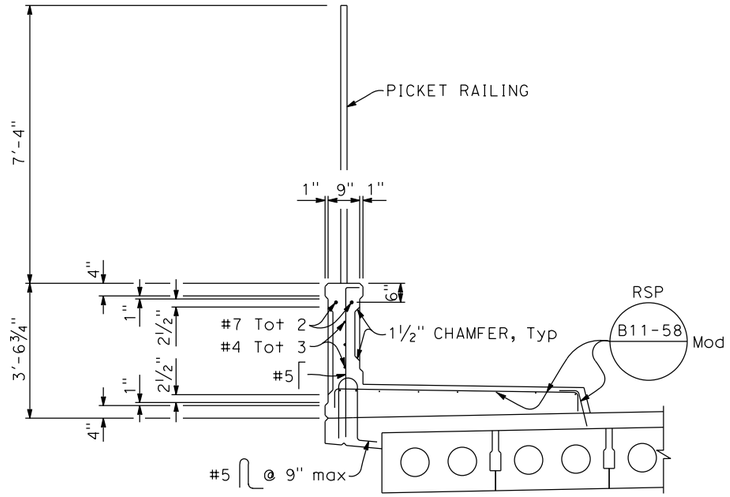

SECTION B-B

½" = 1'-0"

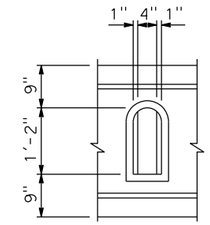

INTERIOR WINDOW

¾" = 1'-0"

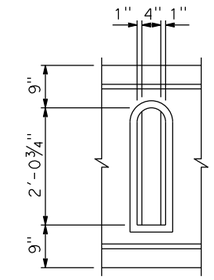

EXTERIOR WINDOW

¾" = 1'-0"

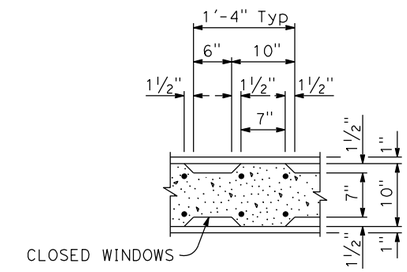

SECTION C-C

1" = 1'-0"

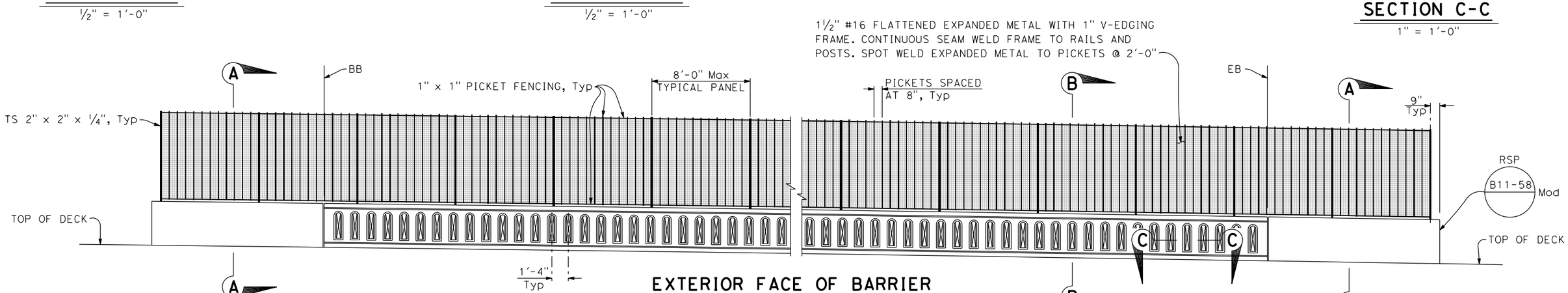

EXTERIOR FACE OF BARRIER

¼" = 1'-0"

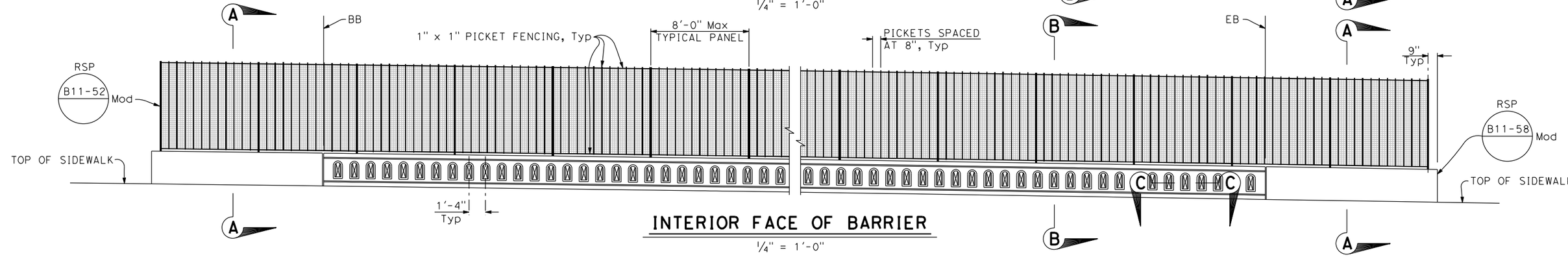

INTERIOR FACE OF BARRIER

¼" = 1'-0"

DESIGN	BY T. Osterkamp	CHECKED M. Iley	
DETAILS	BY R. Liptak	CHECKED M. Iley	
QUANTITIES	BY R. Liptak / F. Enriquez	CHECKED M. Iley	

DESIGN OVERSIGHT

SIGN OFF DATE

PREPARED FOR THE CITY OF VICTORVILLE

T. Osterkamp
PROJECT ENGINEER

BRIDGE NO. 54C0547
POST MILES

BEAR VALLEY ROAD OVERHEAD
ARCHITECTURAL DETAILS

DESIGN DETAIL SHEET (ENGLISH) (REV. 03/14/12)

ORIGINAL SCALE IN INCHES FOR REDUCED PLANS 0 1 2 3

UNIT:
PROJECT NUMBER & PHASE:
CONTRACT NO.:

DISREGARD PRINTS BEARING EARLIER REVISION DATES

REVISION DATES				SHEET	OF
X				17	24

FILE => J:\2007_Bear_Vly_BR_Widen\517\2007ARCH01.dgn

USERNAME => untitled DATE PLOTTED => 12/3/2018 TIME PLOTTED => 3:41:34 PM

DIST	COUNTY	ROUTE	POST MILES TOTAL PROJECT	SHEET No	TOTAL SHEETS
08	SB	CR		75	81

REGISTERED CIVIL ENGINEER DATE

PLANS APPROVAL DATE

REGISTERED PROFESSIONAL ENGINEER T. OSTERKAMP No. C46783 Exp. 6/30/19 CIVIL STATE OF CALIFORNIA

The State of California or its officers or agents shall not be responsible for the accuracy or completeness of scanned copies of this plan sheet.

DOKKEN ENGINEERING
110 BLUE RAVINE ROAD, SUITE 200
FOLSOM, CA 95630

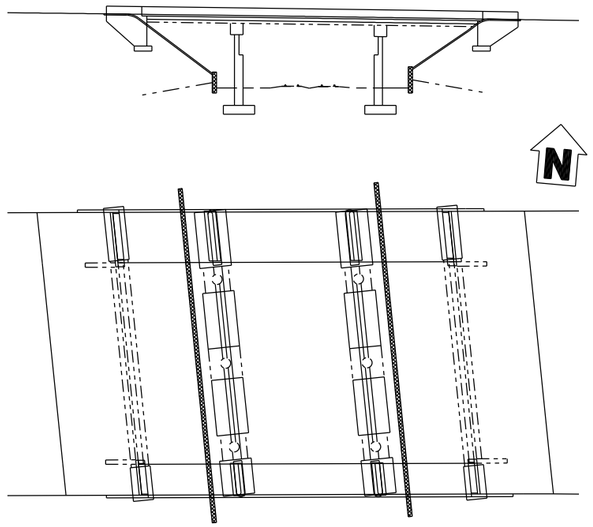

STEP 1
NO SCALE

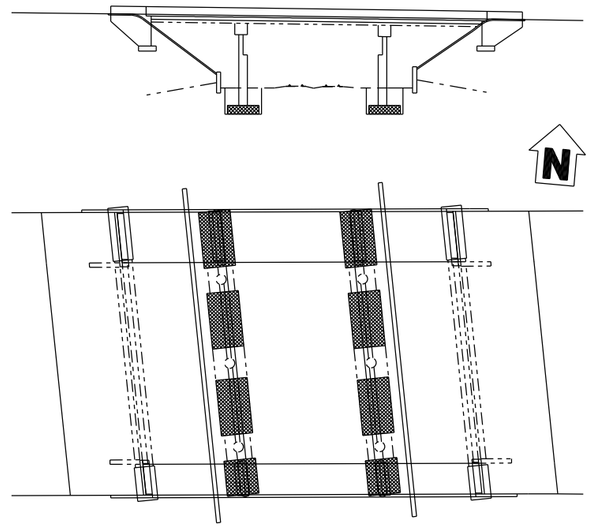

STEP 2
NO SCALE

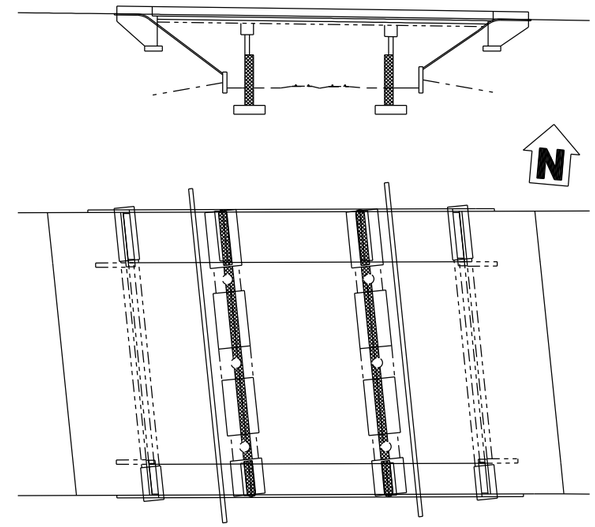

STEP 3
NO SCALE

LEGEND

STEP CONSTRUCTION

STEPS:

1. Remove slope paving (partial) and construct tie back walls.
2. Excavate and shore. Construct footings.
3. Construct crash walls and bents to top of crash walls. Backfill excavations. Remaining bent wall between existing columns can be constructed in steps 3-6.
4. Construct remaining bent and bent cap, south side only. Construct south side abutments (may be constructed in steps 1-4).
5. Construct south side superstructure, barriers, and closure pour.
6. Repeat steps 4 and 5 for north side construction.

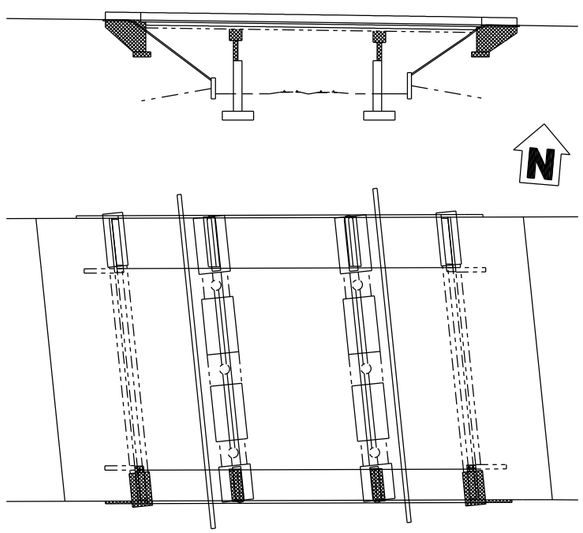

STEP 4
NO SCALE

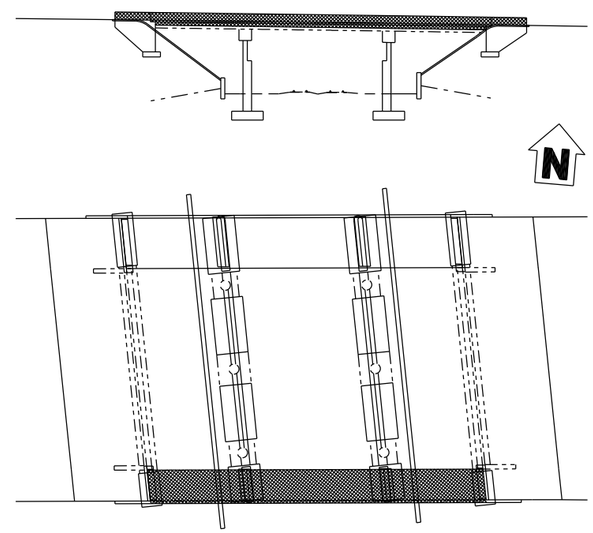

STEP 5
NO SCALE

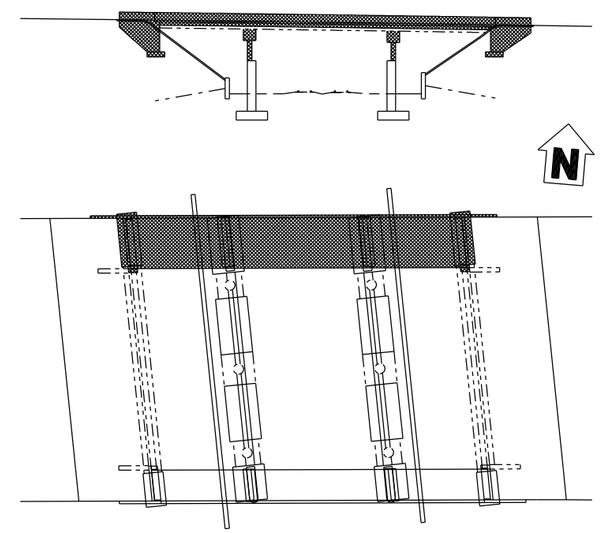

STEP 6
NO SCALE

DESIGN	BY T. Osterkamp	CHECKED M. Iley	
DETAILS	BY R. Liptak	CHECKED M. Iley	
QUANTITIES	BY R. Liptak / F. Enriquez	CHECKED M. Iley	

DESIGN OVERSIGHT

SIGN OFF DATE

PREPARED FOR THE **CITY OF VICTORVILLE**

T. Osterkamp
PROJECT ENGINEER

BRIDGE NO. 54C0547
POST MILES

BEAR VALLEY ROAD OVERHEAD
CONSTRUCTION SEQUENCE

DESIGN DETAIL SHEET (ENGLISH) (REV. 03/14/12)

ORIGINAL SCALE IN INCHES FOR REDUCED PLANS 0 1 2 3

UNIT:
PROJECT NUMBER & PHASE: CONTRACT NO.:

DISREGARD PRINTS BEARING EARLIER REVISION DATES

REVISION DATES x

SHEET 18 OF 24

FILE => J:\2007_Bear_Vly_BR_Widen\517\2007CONST1.dgn

USERNAME => untitled DATE PLOTTED => 12/3/2018 TIME PLOTTED => 11:56:38 PM

DIST	COUNTY	ROUTE	POST MILES TOTAL PROJECT	SHEET No.	TOTAL SHEETS
08	SB	CR		76	81

REGISTERED STRUCTURAL ENGINEER DATE

PLANS APPROVAL DATE

The State of California or its officers or agents shall not be responsible for the accuracy or completeness of electronic copies of this plan sheet.

REGISTERED PROFESSIONAL ENGINEER T. OSTERKAMP No. C46783 Exp. 6/30/19 STRUCTURAL STATE OF CALIFORNIA

DOKKEN ENGINEERING
110 BLUE RAVINE ROAD, SUITE 200
FOLSOM, CA 95630

GENERAL NOTES

DESIGN:

AASHTO LRFD Bridge Design Specifications, 4th Edition with California Amendments.

PRESTRESSING STEEL:

Bars - ASTM Designation: A722 Type II (150 ksi)

Strand Tendons-ASTM Designation: A416 (270 Ksi Low Relaxation steel)

FTL = Factored Test Load per anchor (Kips)

fpu = Minimum tensile strength of prestressing steel

As = Minimum cross sectional area of prestressing steel in ground anchor (square inch)

$As(Min) = \frac{1.0\ FTL}{0.75\ fpu}$ (Strands)

$As(Min) = \frac{1.0\ FTL}{0.80\ fpu}$ (Bars)

Lock-off = 0.60 FTL ◇1

NOTES:

(A) Level of initial grouting for drilled hole 6" in diameter or smaller

(B) Level of secondary grouting

(C) Level of initial grouting inside corrugated sheathing

(D) Bonded length shall be determined by the contractor

(E) For unbonded length = 15'-0" min

(F) For inclination, see "General Plan" sheet

(G) Face of Wall Excavation

NOTES:

1. Anchorage enclosure shall only be used when anchor head assembly is not enclosed in concrete.
2. Anchorage enclosure shall have provisions to allow injecting grout at low end and venting at high end. Galvanize after fabrication.
3. Silicone sealant to cover full width of flange.
4. Steel tube (Min thickness = 1/4") welded to bearing plate. Galvanize assembly after fabrication
5. Steel tube welded to bearing plate. Inside diameter of steel tube (Min thickness = 1/4") to be 1" greater than outside diameter of smooth sheathing.
6. Galvanize assembly after fabrication.
7. For other wall details, see PROJECT PLANS.

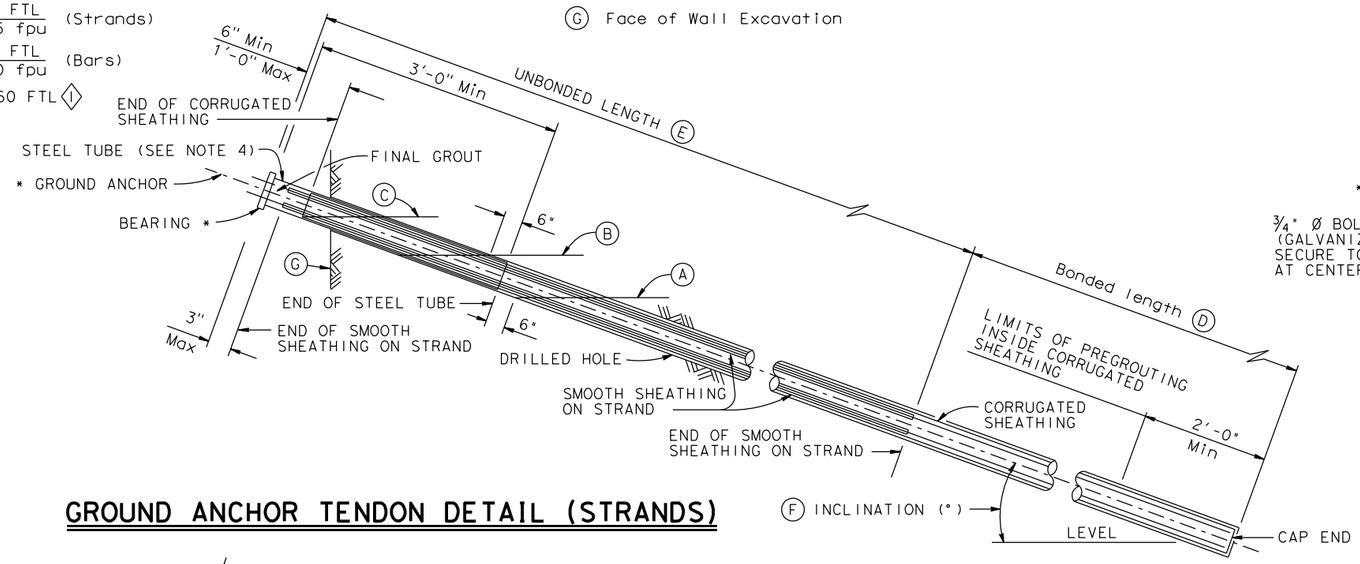

GROUND ANCHOR TENDON DETAIL (STRANDS)

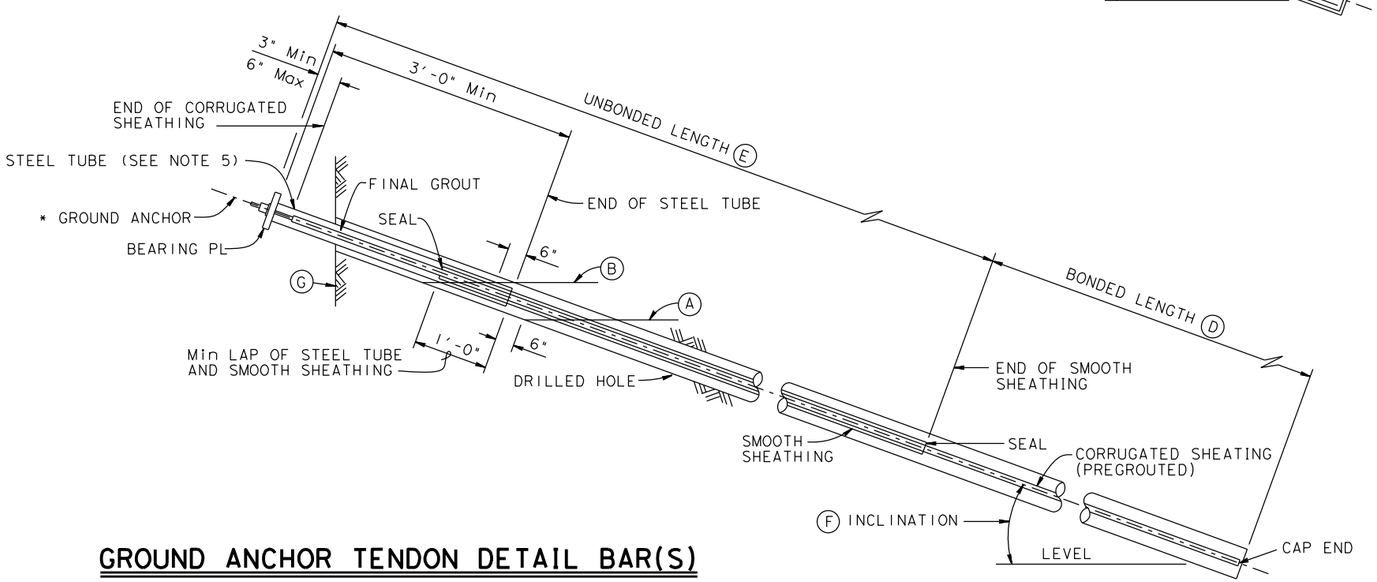

GROUND ANCHOR TENDON DETAIL BAR(S)

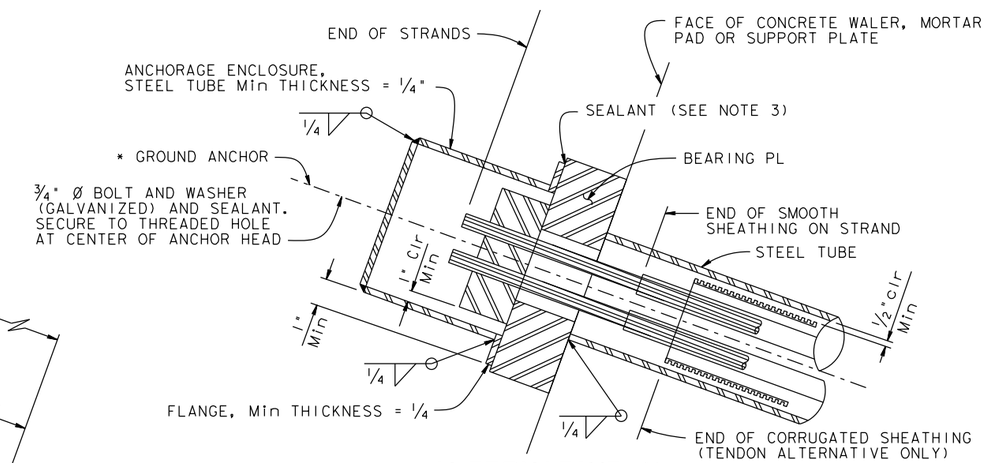

ALTERNATIVE X

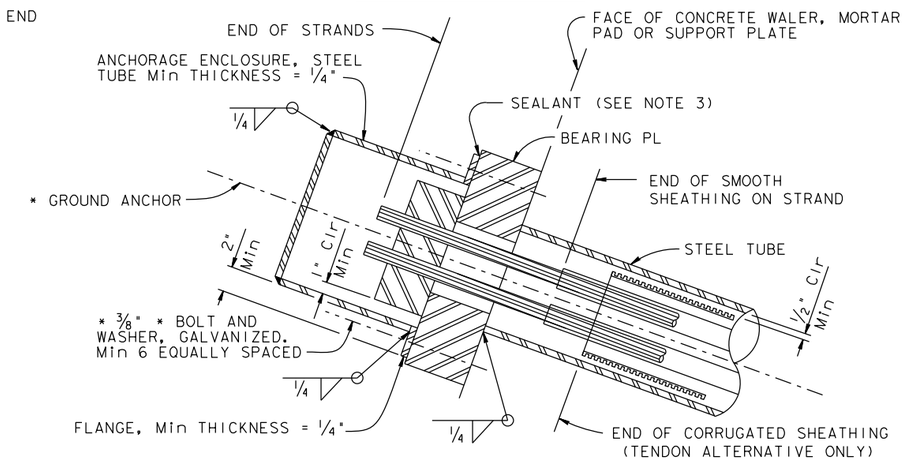

ALTERNATIVE Y

ANCHORAGE ENCLOSURE DETAILS

NO SCALE

REVISED STANDARD DRAWING	◇1 ADDED LOCK-OFF LOAD	STATE OF CALIFORNIA DEPARTMENT OF TRANSPORTATION	DIVISION OF ENGINEERING SERVICES	BRIDGE NO. 54C0547	BEAR VALLEY ROAD OVERHEAD
FILE NO. xs12-040 APPROVAL DATE July 2014				POST MILE	SUB HORIZONTAL GROUND ANCHOR DETAILS

DS OSD 2147A (ENGLISH STANDARD DRAWING "XS" BORDER REV. (02-02-11)

ORIGINAL SCALE IN INCHES FOR REDUCED PLANS 0 1 2 3

UNIT: X
PROJECT NUMBER & PHASE: CONTRACT NO.:

DISREGARD PRINTS BEARING EARLIER REVISION DATES

REVISION DATES 6-24-14 7-12-16

SHEET 19 OF 24

FILE => J:\2007_Bear_Vly_BR_Widen\517\2007MD2.dgn

USERNAME => untitled DATE PLOTTED => 12/3/2018 TIME PLOTTED => 2:01:26 PM

DIST	COUNTY	ROUTE	POST MILES TOTAL PROJECT	SHEET No	TOTAL SHEETS
08	SB	CR		77	81

REGISTERED CIVIL ENGINEER DATE

PLANS APPROVAL DATE

REGISTERED PROFESSIONAL ENGINEER T. OSTERKAMP No. C46783 Exp. 6/30/19 CIVIL STATE OF CALIFORNIA

The State of California or its officers or agents shall not be responsible for the accuracy or completeness of scanned copies of this plan sheet.

DOKKEN ENGINEERING
110 BLUE RAVINE ROAD, SUITE 200
FOLSOM, CA 95630

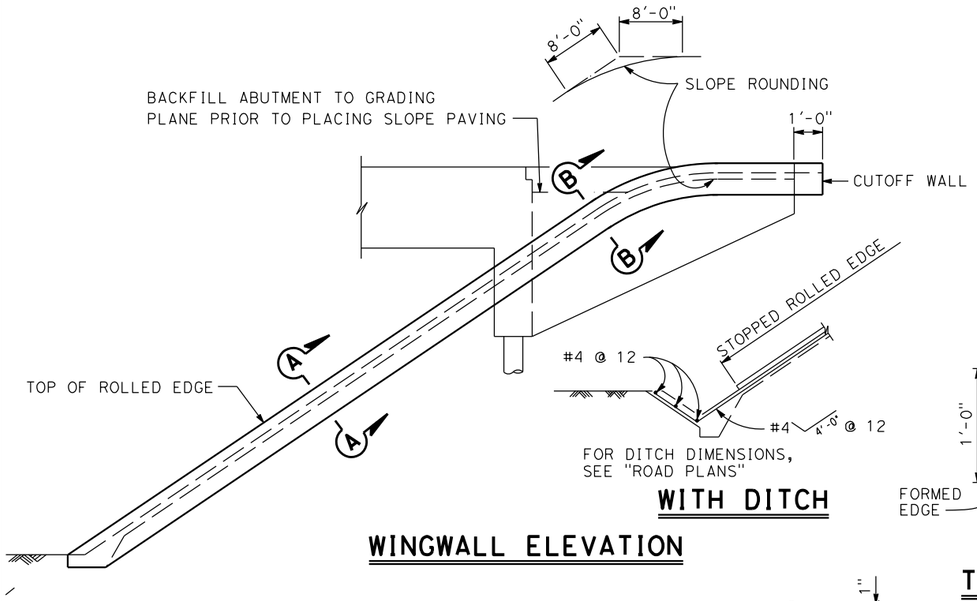

WITH DITCH

WINGWALL ELEVATION

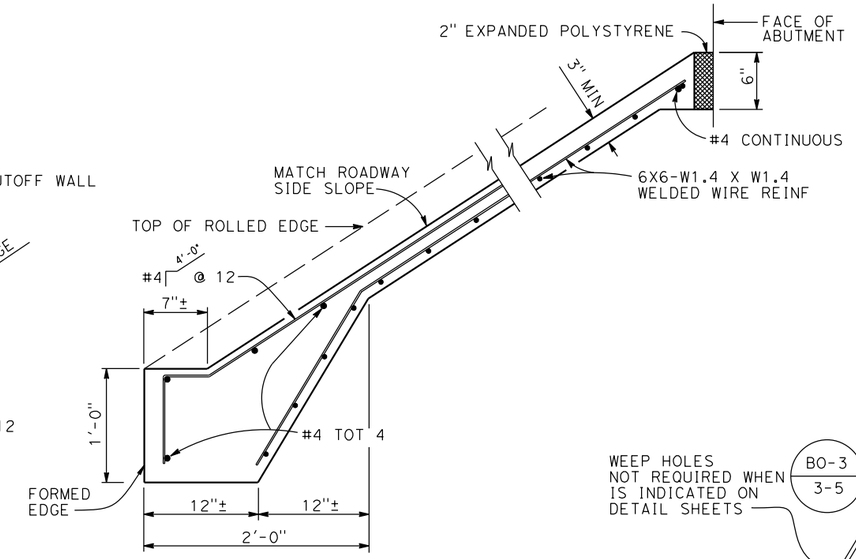

TYPICAL SECTION - CONCRETE PAVING

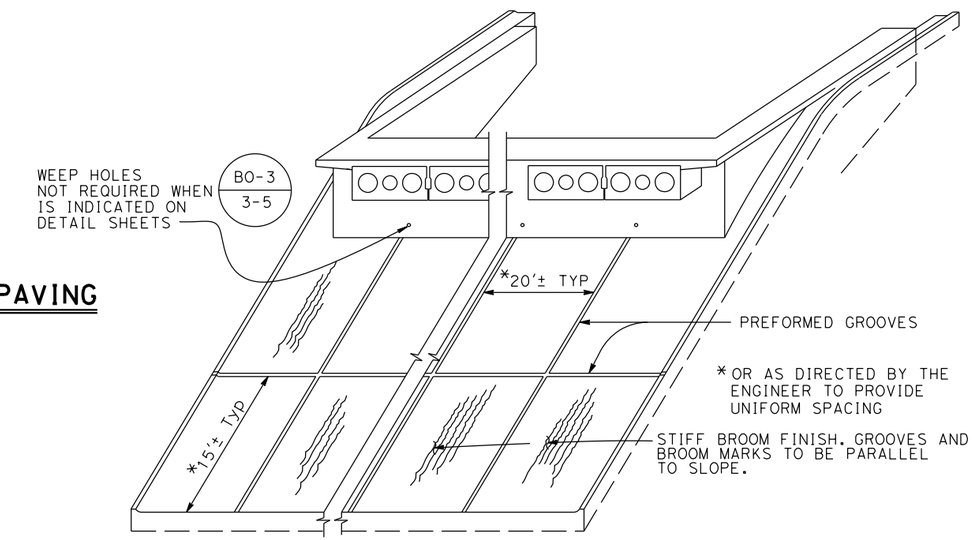

PICTORIAL VIEW OF TYPICAL INSTALLATION

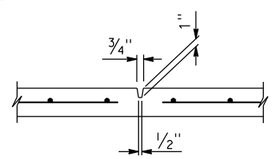

PREFORMED GROOVE

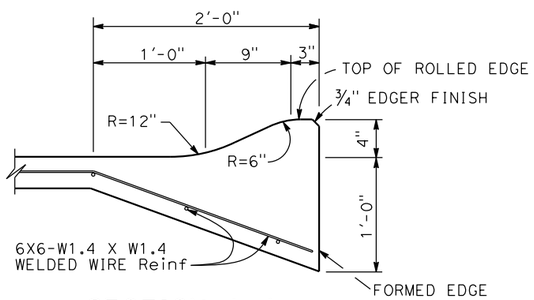

SECTION A-A

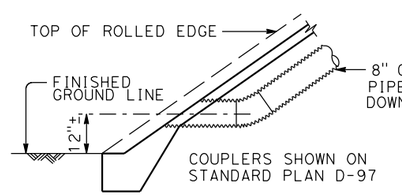

TYPICAL - NO CURB

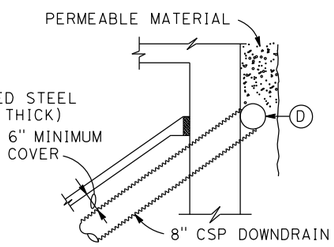

TYPICAL - DRAIN CONNECTION

* THIS DIMENSION BECOMES ZERO WHEN EDGE OF DECK IS AT OUTSIDE FACE OF WW

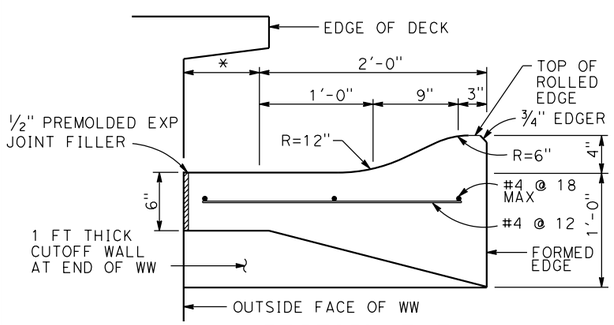

SECTION B-B

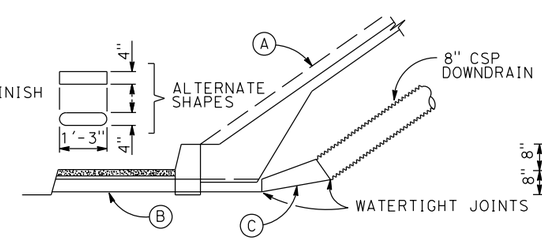

TYPICAL - WITH SIDEWALK

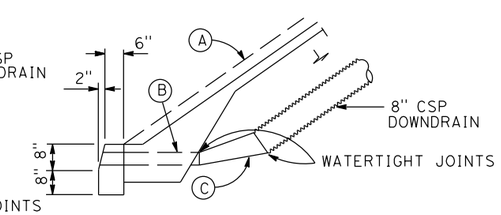

TYPICAL - WITH CURB

DRAINAGE DETAILS

LIMITS OF SLOPE PAVING & DRAINAGE LAYOUT:

(A) TOP OF ROLLED EDGE

(B) CONDUIT:
0.064" GALV CORRUGATED STEEL OR 0.109" SMOOTH GALV STEEL

(C) TAPER: { 0.064" GALV CORRUGATED STEEL OR / 0.109" SMOOTH GALV STEEL

(D) 8" PERFORATED STEEL PIPE (0.064" THICK) UNDERDRAIN BEHIND ABUTMENT. CONNECT TO DOWNDRAIN AS SHOWN ON LIMITS OF SLOPE PAVING & DRAINAGE LAYOUT.

NOTE:
Drainage details are only applicable when BO-3 3-5 is indicated on detail sheets.

NO SCALE

DESIGN	BY T. Osterkamp	CHECKED M. Iley	
DETAILS	BY R. Liptak	CHECKED M. Iley	
QUANTITIES	BY R. Liptak / F. Enriquez	CHECKED M. Iley	

DESIGN OVERSIGHT

SIGN OFF DATE

PREPARED FOR THE CITY OF VICTORVILLE

T. Osterkamp
PROJECT ENGINEER

BRIDGE NO. 54C0547
POST MILES

BEAR VALLEY ROAD OVERHEAD
SLOPE PAVING - FULL SLOPE

DESIGN DETAIL SHEET (ENGLISH) (REV. 03/14/12)

ORIGINAL SCALE IN INCHES FOR REDUCED PLANS 0 1 2 3

UNIT:
PROJECT NUMBER & PHASE:
CONTRACT NO.:

DISREGARD PRINTS BEARING EARLIER REVISION DATES

REVISION DATES: X

SHEET 20 OF 24

FILE => J:\2007_Bear_Vly_BR_Widen\517\2007SLP.dgn

USERNAME => untitled DATE PLOTTED => 12/3/2018 TIME PLOTTED => 1:59:05 PM

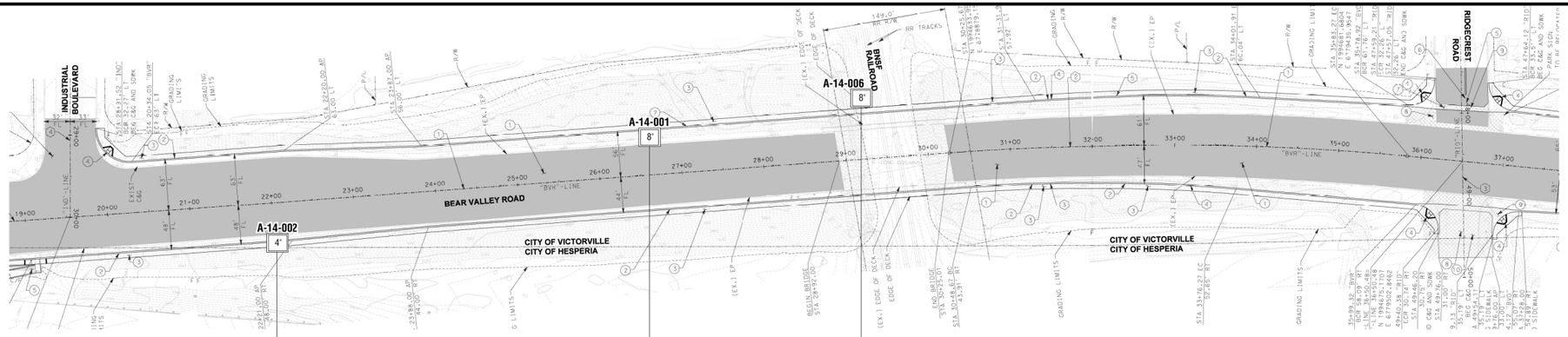

PLAN

SCALE: 1" = 80'

NOTES:

1. The consistency/apparent density descriptions are from Figures 2-9 and 2-10 of the Caltrans "Soil and Rock Logging, Classification, and Presentation Manual". These descriptors are based upon the Standard Penetration Test (ASTM D 1586)(corrected for Hammer Energy Ratio and the Modified California sampling method (ASTM D 3550). The descriptors based on the Mod Cal blow counts have been correlated to SPT blow counts based on a correction factor of 0.55 (Rogers, 2006).

2. Relatively undisturbed soil samples were obtained by driving a 3-inch outside diameter, with a 2.5-inch inside diameter (California Modified) split-spoon sampler for Modified California Sampling Methods and a 2-inch outside diameter split-spoon sampler for Standard Penetration Test Sampling Methods.

3. The boring logs and related information represent the opinion of the professional engineer as to the character of the material at the locations shown. Soil and groundwater conditions between adjacent test holes and at other locations may differ from those shown. Groundwater conditions may change with passage of time.

4. Test boring elevations are approximate based on topographic base sheet mapping prepared for this project.

5. Test boring locations were determined in the field based on staking and pacing from mapped site features. The locations of the explorations should be considered accurate only to the degree implied by the measuring methods used.

6. A 140-pound automatic hammer falling 30 inches was used to drive samplers.

7. Visual classification of earth materials was based on field inspection and was confirmed or revised with laboratory test results.

8. This LOTB sheet was prepared in accordance with the Caltrans Soil & Rock Logging, Classification, and Presentation Manual (2010).

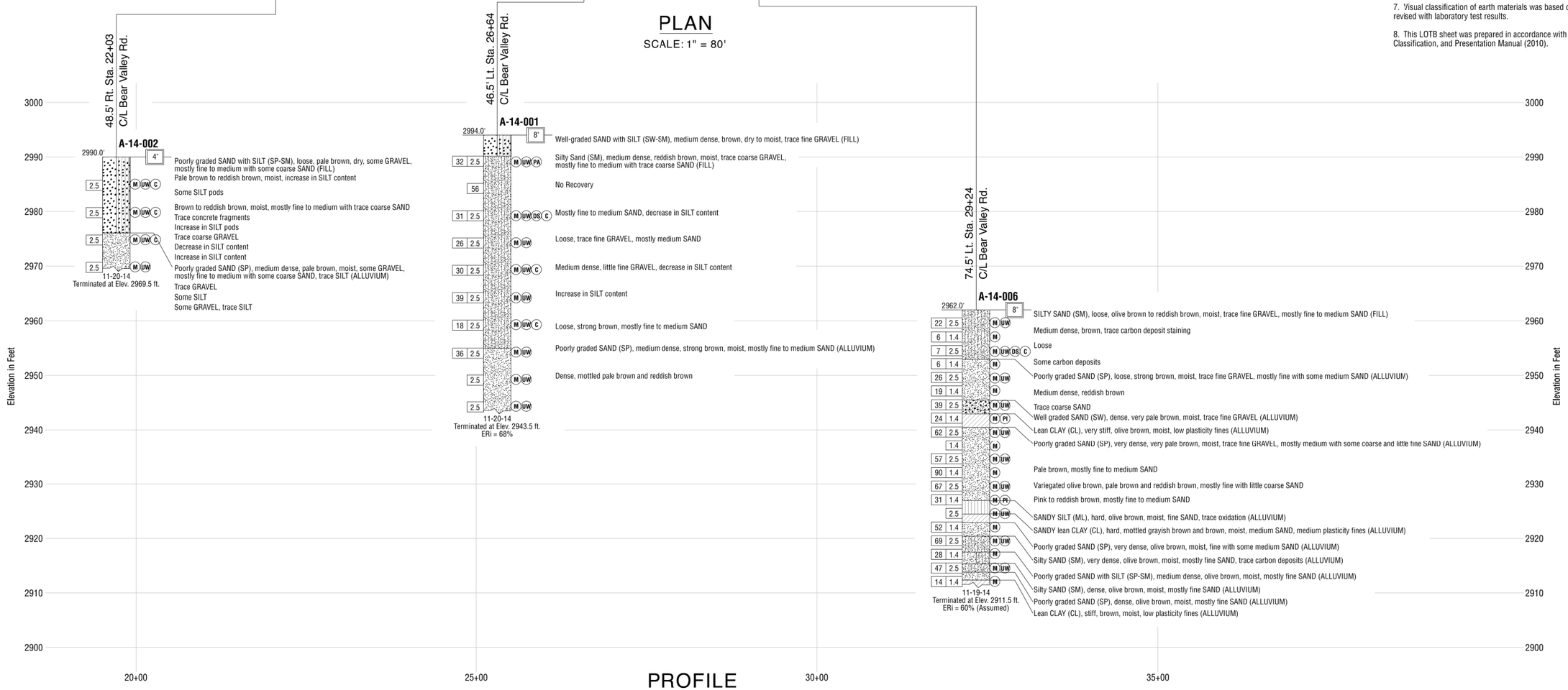

PROFILE

HORIZONTAL SCALE: 1" = 80'
VERTICAL SCALE: 1" = 10'

NO.	REVISION	BY	DATE

DESIGNED: JELISA THOMAS
DRAWN: DIRK HANSEN
CHECKED: JELISA THOMAS

RECORD DRAWING DATE:
SCALE HORIZ: 80' VERT: 10'
PROJECT NO. XXXXX
CAD FILE: ...\S11\2007_AB1.dgn

CITY OF VICTORVILLE
ENGINEERING DIVISION
14343 CIVIC DRIVE,
VICTORVILLE, CA 92392
(760) 955-5158

DOKKEN ENGINEERING
110 BLUE RAVINE ROAD SUITE 200, FOLSOM CA. 916-858-0642

JUANN RAMOS, PROJECT ENGINEER DATE

REGISTERED PROFESSIONAL ENGINEER
JELISA THOMAS
No.
CIVIL
STATE OF CALIFORNIA

BEAR VALLEY ROAD OH AT BNSF RAILROAD

LOG OF TEST BORING NO. 1

DWG. NO. 6

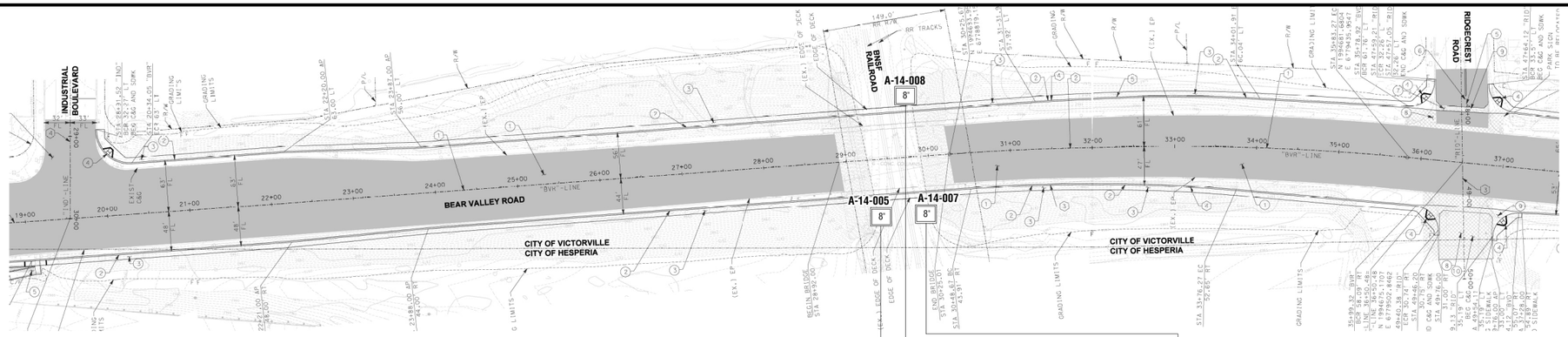

PLAN

SCALE: 1" = 80'

NOTES:

1. The consistency/apparent density descriptions are from Figures 2-9 and 2-10 of the Caltrans "Soil and Rock Logging, Classification, and Presentation Manual". These descriptors are based upon the Standard Penetration Test (ASTM D 1586)(corrected for Hammer Energy Ratio and the Modified California sampling method (ASTM D 3550). The descriptors based on the Mod Cal blow counts have been correlated to SPT blow counts based on a correction factor of 0.55 (Rogers, 2006).

2. Relatively undisturbed soil samples were obtained by driving a 3-inch outside diameter, with a 2.5-inch inside diameter (California Modified) split-spoon sampler for Modified California Sampling Methods and a 2-inch outside diameter split-spoon sampler for Standard Penetration Test Sampling Methods.

3. The boring logs and related information represent the opinion of the professional engineer as to the character of the material at the locations shown. Soil and groundwater conditions between adjacent test holes and at other locations may differ from those shown. Groundwater conditions may change with passage of time.

4. Test boring elevations are approximate based on topographic base sheet mapping prepared for this project.

5. Test boring locations were determined in the field based on staking and pacing from mapped site features. The locations of the explorations should be considered accurate only to the degree implied by the measuring methods used.

6. A 140-pound automatic hammer falling 30 inches was used to drive samplers.

7. Visual classification of earth materials was based on field inspection and was confirmed or revised with laboratory test results.

8. This LOTB sheet was prepared in accordance with the Caltrans Soil & Rock Logging, Classification, and Presentation Manual (2010).

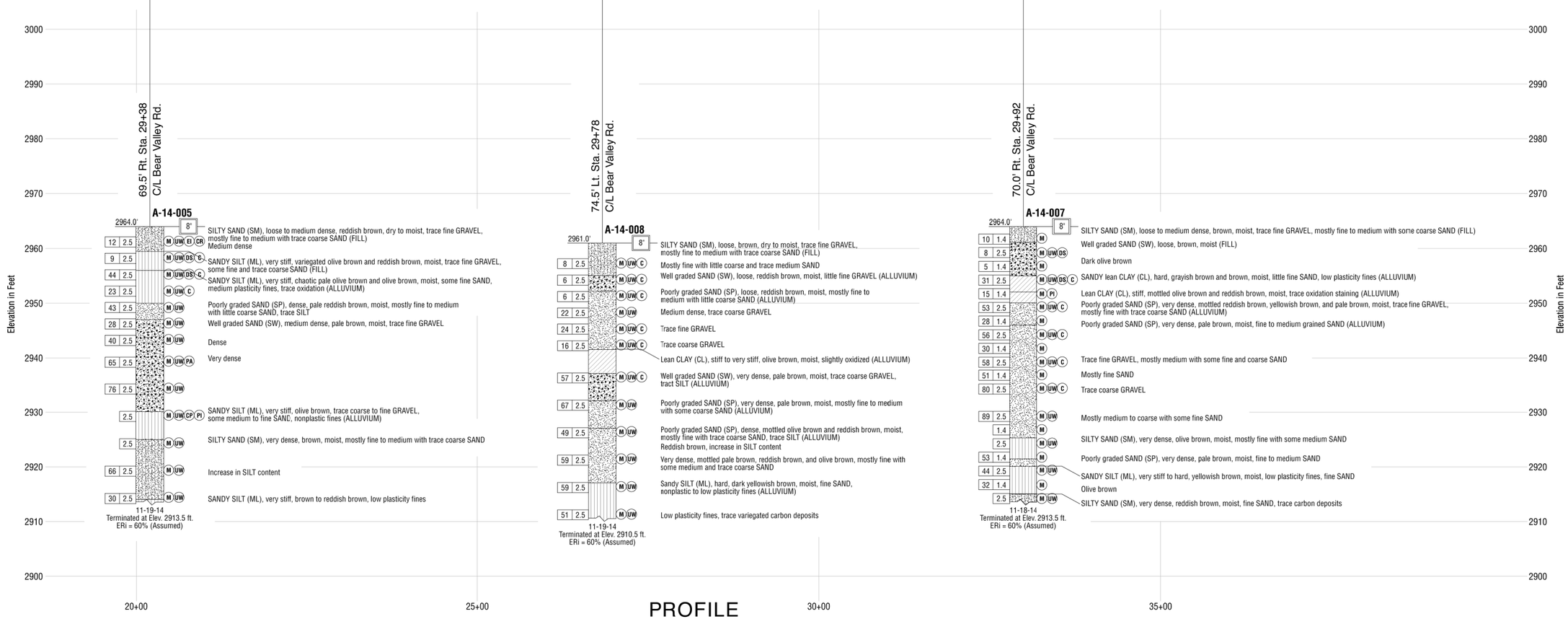

PROFILE

HORIZONTAL SCALE: 1" = 80'
VERTICAL SCALE: 1" = 10'

NO.	REVISION	BY	DATE

DESIGNED: JELISA THOMAS
DRAWN: DIRK HANSEN
CHECKED: JELISA THOMAS

RECORD DRAWING DATE:
SCALE HORIZ: 80' VERT: 10'
PROJECT NO. XXXXX
CAD FILE: ...\S11\2007_AB1.dgn

CITY OF VICTORVILLE
ENGINEERING DIVISION
14343 CIVIC DRIVE,
VICTORVILLE, CA 92392
(760) 955-5158

DOKKEN ENGINEERING
110 BLUE RAVINE ROAD SUITE 200, FOLSOM CA. 916-858-0642

JUANN RAMOS, PROJECT ENGINEER DATE

REGISTERED PROFESSIONAL ENGINEER JELISA THOMAS No. CIVIL STATE OF CALIFORNIA

BEAR VALLEY ROAD OH AT BNSF RAILROAD

LOG OF TEST BORING NO. 2

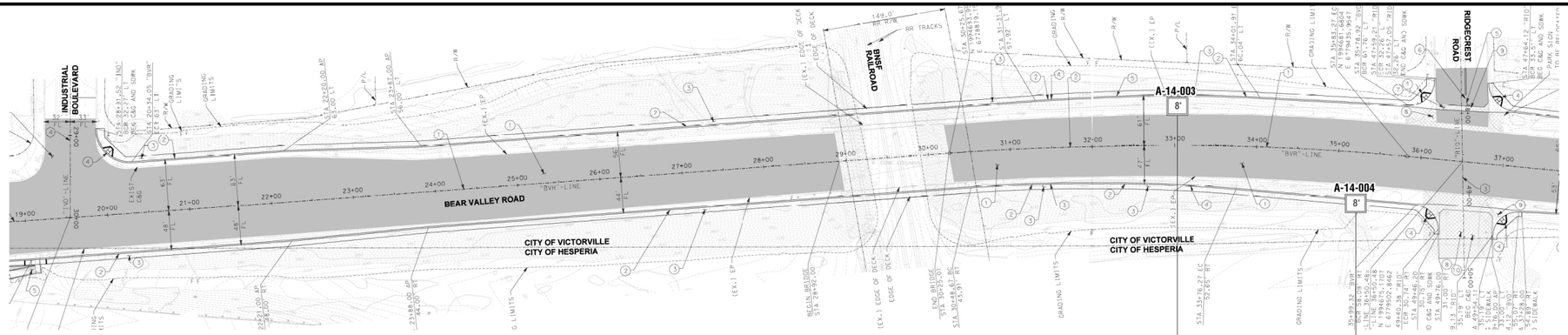

PLAN

SCALE: 1" = 80'

NOTES:

1. The consistency/apparent density descriptions are from Figures 2-9 and 2-10 of the Caltrans "Soil and Rock Logging, Classification, and Presentation Manual". These descriptors are based upon the Standard Penetration Test (ASTM D 1586)(corrected for Hammer Energy Ratio and the Modified California sampling method (ASTM D 3550). The descriptors based on the Mod Cal blow counts have been correlated to SPT blow counts based on a correction factor of 0.55 (Rogers, 2006).

2. Relatively undisturbed soil samples were obtained by driving a 3-inch outside diameter, with a 2.5-inch inside diameter (California Modified) split-spoon sampler for Modified California Sampling Methods and a 2-inch outside diameter split-spoon sampler for Standard Penetration Test Sampling Methods.

3. The boring logs and related information represent the opinion of the professional engineer as to the character of the material at the locations shown. Soil and groundwater conditions between adjacent test holes and at other locations may differ from those shown. Groundwater conditions may change with passage of time.

4. Test boring elevations are approximate based on topographic base sheet mapping prepared for this project.

5. Test boring locations were determined in the field based on staking and pacing from mapped site features. The locations of the explorations should be considered accurate only to the degree implied by the measuring methods used.

6. A 140-pound automatic hammer falling 30 inches was used to drive samplers.

7. Visual classification of earth materials was based on field inspection and was confirmed or revised with laboratory test results.

8. This LOTB sheet was prepared in accordance with the Caltrans Soil & Rock Logging, Classification, and Presentation Manual (2010).

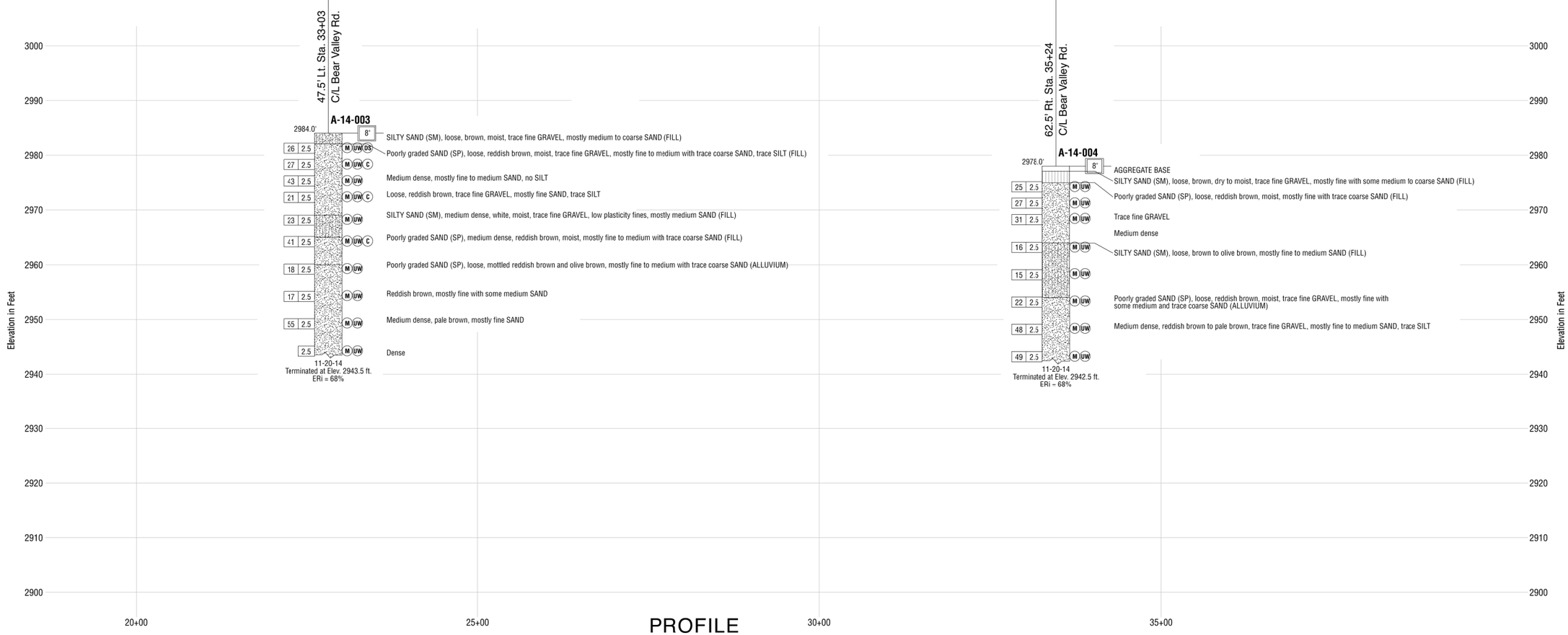

PROFILE

HORIZONTAL SCALE: 1" = 80'
VERTICAL SCALE: 1" = 10'

NO.	REVISION	BY	DATE

DESIGNED: JELISA THOMAS
DRAWN: DIRK HANSEN
CHECKED: JELISA THOMAS

RECORD DRAWING DATE:
SCALE HORIZ: 80' VERT: 10'
PROJECT NO. XXXXX
CAD FILE: ...\511\2007_AB1.dgn

CITY OF VICTORVILLE
ENGINEERING DIVISION
14343 CIVIC DRIVE,
VICTORVILLE, CA 92392
(760) 955-5158

DOKKEN ENGINEERING
110 BLUE RAVINE ROAD SUITE 200, FOLSOM CA. 916-858-0642

JUANN RAMOS, PROJECT ENGINEER — DATE

REGISTERED PROFESSIONAL ENGINEER
JELISA THOMAS
No.
CIVIL
STATE OF CALIFORNIA

BEAR VALLEY ROAD OH AT BNSF RAILROAD

LOG OF TEST BORING NO. 3

DIST	COUNTY	ROUTE	POST MILES TOTAL PROJECT	SHEET No	TOTAL SHEETS
08	SB	CR		81	81

REGISTERED CIVIL ENGINEER DATE

PLANS APPROVAL DATE

REGISTERED PROFESSIONAL ENGINEER T. OSTERKAMP No. C46783 Exp. 6/30/19 CIVIL STATE OF CALIFORNIA

The State of California or its officers or agents shall not be responsible for the accuracy or completeness of scanned copies of this plan sheet.

DOKKEN ENGINEERING
110 BLUE RAVINE ROAD, SUITE 200
FOLSOM, CA 95630

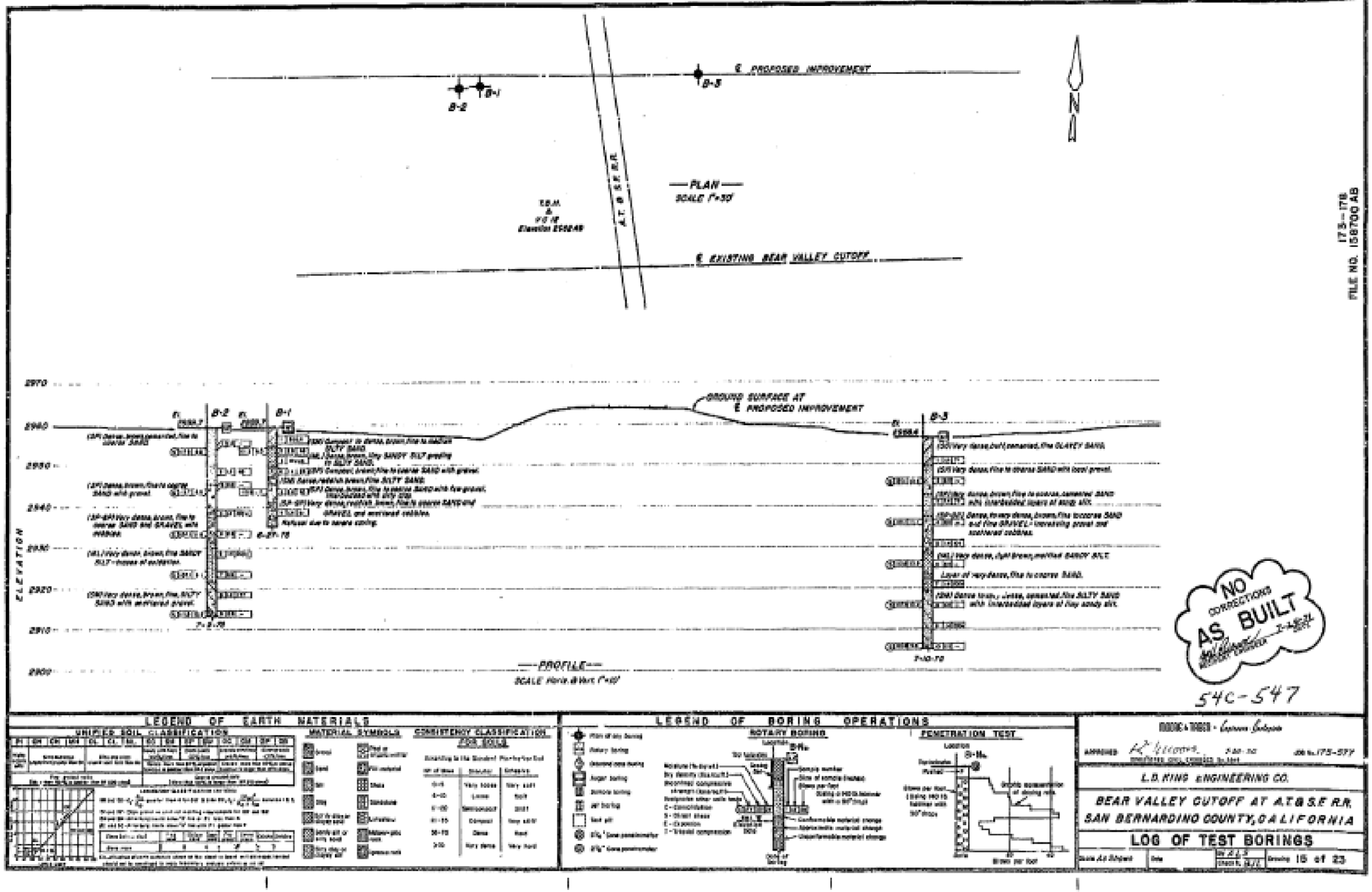

NO CORRECTIONS AS BUILT

54C-547

173-178
FILE NO. 158700 AB

REDUCED PLAN
0 1 2 3
3 INCHES ON ORIGINAL PLAN

GEOTECHNICAL SERVICES - DIVISION OF ENGINEERING SERVICES

As-Built Log of Test Borings sheet is considered an informational document only. As such, the State of California registration seal with signature, license number and registration certificate expiration date confirm that this is a true and accurate copy of the original document. It does not attest to the accuracy or validity of the information contained in the original document. This drawing is available and presented only for the convenience of any bidder, contractor or other interested party.

DIST	COUNTY	ROUTE	POST MILES - TOTAL PROJECT	SHEET NO.	TOTAL SHEETS
-	SBd	LOCAL	-	-	-

REGISTERED ENGINEER - CIVIL DATE

BEAR VALLEY ROAD OH
(AS BUILT) LOG OF TEST BORINGS

NOTE: A COPY OF THIS LOG OF TEST BORINGS IS AVAILABLE AT OFFICE OF STRUCTURE MAINTENANCE AND INVESTIGATIONS, SACRAMENTO, CALIFORNIA

CU: - EA: -

BRIDGE NO. 54C-547

DESIGN OVERSIGHT

SIGN OFF DATE

	BY	CHECKED
DESIGN	T. Osterkamp	M. Iley
DETAILS	R. Liptak	M. Iley
QUANTITIES	R. Liptak / F. Enriquez	M. Iley

PREPARED FOR THE CITY OF VICTORVILLE

T. Osterkamp
PROJECT ENGINEER

BRIDGE NO. 54C0547
POST MILES

BEAR VALLEY ROAD OVERHEAD
(AS BUILT) LOG OF TEST BORINGS

DESIGN DETAIL SHEET (ENGLISH) (REV. 03/14/12)

ORIGINAL SCALE IN INCHES FOR REDUCED PLANS 0 1 2 3

UNIT:
PROJECT NUMBER & PHASE:
CONTRACT NO.:

DISREGARD PRINTS BEARING EARLIER REVISION DATES

REVISION DATES X

SHEET 24 OF 24

FILE => $REQUEST

USERNAME => $USER DATE PLOTTED => $DATE TIME PLOTTED => $TIME

EXHIBIT 2

Bear Valley Road Overcrossing Geotechnical Design Report (GDR 020816)
Bear Valley- Aerially Deposited Lead Investigation Results (ADL 022817)
Bear Valley – Materials Report (MR 020817)
Bear Valley – Foundation Report (FR 020817)
Bear Valley – Asbestos and Deteriorated Lead-Containing Paint Survey Report (ACM LCP Report 021717)

Project No. A9072-06-01
February 17, 2015
Revised February 8, 2017

VIA ELECTRONIC MAIL

Mr. Juann Ramos, PE
Dokken Engineering
110 Blue Ravine Road, Suite 200
Folsom, California 95630

Subject: GEOTECHNICAL DESIGN REPORT
BEAR VALLEY ROAD OVERHEAD AT BNSF RAILROAD
BRIDGE REHABILITATION AND WIDENING
VICTORVILLE, CALIFORNIA

Dear Mr. Ramos:

In accordance with your authorization, we herein submit our Geotechnical Design Report (GDR) for the proposed design and construction of the rehabilitation and widening of Bear Valley Road at the Burlington Northern Santa Fe (BNSF) Railroad crossing in the City of Victorville, California. This report evaluates the geotechnical conditions within the project area based on field exploration and laboratory test data and provides geotechnical recommendations for project design and construction.

Please contact us if you have any questions regarding this GDR or if we may be of further service.

Sincerely,

GEOCON WEST, INC.

REGISTERED PROFESSIONAL ENGINEER
JELISA M. THOMAS
74946
CIVIL
STATE OF CALIFORNIA

PROFESSIONAL GEOLOGIST
GERALD KASMAN
NO. 2251
CERTIFIED ENGINEERING GEOLOGIST
STATE OF CALIFORNIA

Jelisa M. Thomas
PE 74946

Gerald A. Kasman
CEG 2251

(PDF) Addressee

TABLE OF CONTENTS

GEOTECHNICAL DESIGN REPORT PAGE

1.0 INTRODUCTION 1

2.0 EXISTING FACILITIES AND PROPOSED IMPROVEMENTS 2
- 2.1 Existing Facilities 2
- 2.2 Proposed Improvements 2

3.0 PROJECT PLANS 3

4.0 PHYSICAL SETTING 3
- 4.1 Climate 3
- 4.2 Topography and Drainage 4
- 4.3 Man-Made and Natural Features of Engineering and Construction Significance 4
- 4.4 Regional Geology and Seismicity 5
- 4.5 Soil Survey Mapping 6

5.0 FIELD EXPLORATION 6
- 5.1 Drilling and Sampling 7

6.0 GEOTECHNICAL TESTING 8
- 6.1 In-situ Testing 8
- 6.2 Laboratory Testing 8

7.0 GEOTECHNICAL CONDITIONS 8
- 7.1 Site Geology 8
  - 7.1.1 Lithology 8
  - 7.1.2 Structure 8
  - 7.1.3 Natural Slope Stability 8
- 7.2 Soil and Groundwater Conditions 9
  - 7.2.1 Soil Conditions 9
  - 7.2.2 Groundwater Conditions 9
- 7.3 Water 9
  - 7.3.1 Surface Water 9
  - 7.3.2 Regional Groundwater 10
- 7.4 Project Site Seismicity 10
  - 7.4.1 Ground Motions 11
  - 7.4.2 Ground Rupture 11

8.0 GEOTECHNICAL ANALYSES AND DESIGN 11
- 8.1 Dynamic Analysis 11
  - 8.1.1 Liquefaction and Lateral Spreading 12
- 8.2 Cuts and Excavations 12
  - 8.2.1 Stability 12
  - 8.2.2 Rippability 13
  - 8.2.3 Grading Factors 13
- 8.3 Embankments 13
  - 8.3.1 Materials for Fill 14
  - 8.3.2 Fill Area Preparation and Fill Placement 14
  - 8.3.3 Embankment Stability 15
  - 8.3.4 Fill Settlement 15
- 8.4 Retaining Walls 15

TABLE OF CONTENTS (Continued)

8.5 Other 15
8.5.1 Corrosion Studies 15
8.5.2 Culverts 16
8.5.3 Drainage Design 17

9.0 MATERIAL SOURCES 17

10.0 MATERIAL DISPOSAL 17

11.0 CONSTRUCTION CONSIDERATIONS 17
11.1 Construction Advisories 17
11.2 Construction Considerations that Influence Specifications 17
11.3 Construction Monitoring and Instrumentation 17
11.4 Hazardous Waste Considerations 18
11.5 Differing Site Conditions 18

12.0 RECOMMENDATIONS AND SPECIFICATIONS 18

13.0 CLOSURE 19
13.1 Foundation and Grading Plan Review 19
13.2 Limitations and Uniformity of Conditions 19

14.0 REFERENCES 20

FIGURES
Figure 1, Vicinity Map
Figure 2, Site Plan
Figure 3, Geologic Map
Figure 4, Preliminary Design Response Spectrum

APPENDIX A
FIELD INVESTIGATION
Table A-1, Summary of Explorations
Figures A1 through A8, Boring Logs

APPENDIX B
LABORATORY TESTING
Figures B1 and B2, Direct Shear Test Results
Figures B3 through B9, Consolidation Test Results
Figure B10, Atterberg Limits
Figure B11 through B16, Grain Size Distribution
Figure B17, Laboratory Test Results
Figure B18 and B19, R-Value Test Results
Figure B20, Corrosivity Test Results

APPENDIX C
LOG OF TEST BORING SHEETS

GEOTECHNICAL DESIGN REPORT

1.0 INTRODUCTION

This Geotechnical Design Report (GDR) presents the results of our geotechnical investigation for the proposed rehabilitation and widening of Bear Valley Road at the Burlington Northern Santa Fe (BNSF) Railroad crossing in the City of Victorville, California. The approximate site location is shown on the Vicinity Map, Figure 1.

The purpose of this report is to document subsurface geotechnical conditions, provide analyses of anticipated site conditions as they pertain to the project described herein, and to recommend geotechnical design and construction criteria for the project as presently proposed. This report also establishes a geotechnical baseline to aid in assessing the existence and scope of potential changed site conditions encountered during construction.

The City of Victorville proposes to widen Bear Valley Road at the BNSF Railroad crossing. The proposed project consists of rehabilitating, retrofitting, and widening the existing bridge which carries Bear Valley Road over the BNSF Railroad in order to meet current AASHTO safety standards and Super Arterial standard roadway configurations set forth by the City of Victorville. Additional improvements would include widening the roadway approaches to accommodate the widened bridge, modification of the traffic signals at Industrial Boulevard and Ridgecrest Road, and increasing the left-turn vehicle storage at the Ridgecrest Road intersection.

This report is intended for use by the project design engineer, construction personnel, bidders and contractors. The recommendations presented herein are based on our analyses of the data obtained from exploratory borings, laboratory test results, engineering analyses, and our experience with similar soil and geologic conditions. The logs of borings, laboratory test results, and log of test borings (LOTB) are presented as Appendices A, B, and C respectively.

Other geotechnical aspects of the project are addressed in the *Preliminary Materials Report* (PMR) and *Preliminary Foundation Report* (PFR) prepared by Geocon and submitted under separate cover.

2.0 EXISTING FACILITIES AND PROPOSED IMPROVEMENTS

The existing and proposed site conditions are described below, and are depicted on the Site Plan (see Figure 2).

2.1 Existing Facilities

The existing Bear Valley Road overhead at the BNSF Railroad crossing is located approximately 3.8 miles east of Interstate-15 and is located almost entirely within Victorville city limits. A small portion of the project is located within Hesperia city limits.

The project limits extend from Station (Sta.) 18+00, which is approximately 135 feet west of Industrial Boulevard, to Sta. 40+85, which is approximately 535 feet east of Ridgecrest Road.

The existing Bear Valley overhead at BSFN railroad consists of a three-span, precast and prestressed I-Girder bridge supported by two end abutments and two interior bents. The abutments and bents are supported on conventional spread foundations. The bridge alignment extends approximately 133 linear feet, from approximate Sta. 28+92 to Sta. 30+25 with a width of approximately 80 feet.

The roadway approaches to the bridge consist of elevated fill embankments up to 36 feet high with side slope inclinations at approximately 2:1 (horizontal to vertical). There are currently no retaining structures at the site.

An existing 10-foot by 4-foot reinforced concrete box culvert crosses the roadway alignment at Sta. 29+12, which is just west of bent 2. The culvert is reported to have an inlet invert elevation of 2954.5 feet above Mean Sea Level (MSL) and an outlet invert elevation of 2951.72 feet MSL.

An existing 36-inch ACP drainpipe also crosses the roadway alignment at Sta. 30+12, which is just east of bent 3. The drainpipe is reported to have an invert elevation between 2956 and 2958 feet MSL.

2.2 Proposed Improvements

The improvements discussed herein are based on preliminary project plans provided by Dokken Engineering. As depicted on the plans, the project begins at Sta. 18+00 on the west and ends at Sta. 40+85 on the east. The total length of the proposed project is approximately 0.4 miles. Stationing is based on the Bear Valley Road centerline.

The project will widen, retrofit, and rehabilitate the existing bridge on Bear Valley Road at the BNSF overcrossing. The bridge will be widened approximately 32 feet to accommodate the construction of 6-foot-wide sidewalks, 8-foot-wide shoulders, and a 12-foot-wide median. Improvements to the bridge will involve seismic retrofits and construction of pier protection walls (crash walls). Rehabilitation of the bridge will require sealing of the deck with methacrylate resin, patching holes, and sealing cracks in the concrete slope protection located near the abutments.

Additional improvements will include widening the roadway approaches to accommodate the widened bridge, modification of the traffic signals at Industrial Boulevard and Ridgecrest Road, and increasing the left-turn vehicle storage capacity at the Ridgecrest Road intersection. The proposed roadway widening will affect the existing culvert. However, the current project plans do not address how the existing culvert will be maintained.

3.0 PROJECT PLANS

We reviewed the following plans related to the project: *Bear Valley Road Cutoff Widen General Plan*, Sheets 1 through 21, prepared by Lim & Nascimento Engineering, dated March 2003; *Bear Valley Road Overhead General Plan, Sheets 1 and 2*, prepared by Dokken Engineering, March 2012; and *City of Victorville Street Improvements Plans for Bear Valley Road Overhead at BNSF Railroad, Sheets 1 through 10*, prepared by Dokken Engineering, undated.

4.0 PHYSICAL SETTING

4.1 Climate

Monthly climate data near the project site are presented in Table 4.1. This data was obtained from information published online by Western Regional Climate Center (www.wrcc.dri.edu). The monthly data were recorded from 1917 to 2015 and the station used for recording (Victorville, #049325, California) was located at Latitude 34.535°; Longitude -117.035°; Elevation 2858 feet MSL. Datum for all elevations in this report is NAVD 88.

TABLE 4.1
MONTHLY CLIMATE SUMMARY

Climate Data	Jan	Feb	Mar	Apr	May	Jun	Jul	Aug	Sep	Oct	Nov	Dec	Annual
Avg. Total Precipitation (inches)	0.95	1.05	0.80	0.36	0.13	0.04	0.14	0.21	0.23	0.32	0.50	0.79	5.52
Avg. High (°F)	58.8	62.1	67.0	74.2	82.7	91.6	98.1	97.2	91.3	80.2	67.3	59.4	77.5
Avg. Low (°F)	29.8	33.1	36.6	41.5	47.9	54.3	60.8	60.2	54.1	44.4	34.5	29.2	43.9

Based on the information obtained, the average precipitation for a calendar year is 5.52 inches. The majority of this precipitation (approximately 86 percent) falls between October and April. The warmest month is July with an average high of 98.1°F and average low of 60.8°F. The coolest month is January with an average high of 58.8°F and an average low of 29.8°F. Contractors should be aware of compaction and workability difficulties that can occur during earthwork in wetter months or periods of precipitation. In addition, grading operations conducted during warmer months may require significant addition of water to properly moisture-condition fill materials.

4.2 Topography and Drainage

The project vicinity is relatively flat with localized variations. The average roadway ground surface elevations range from approximately 2989 feet MSL at the western project extent (Sta. 18+00) to approximately 2992 feet MSL at the existing Bear Valley Road overhead bridge deck to approximately 2957 feet MSL at the eastern project extent (Sta. 40+85). The roadway approaches to the bridge consist of elevated fill embankments up to 36 feet high with side slope inclinations at approximately 2:1 (horizontal to vertical).

To the east of the intersection of Bear Valley Road and Ridgecrest Road, between Sta. 36+50 and 40+85, the north side of Bear Valley Road is bounded by an ascending slope up to 20 feet high with side slope inclinations of approximately 2.5:1 (H:V).

Below the existing bridge, within the BSNF railroad right-of-way, the ground surface elevation is approximately 2965 feet MSL.

Site drainage occurs via sheet flow across the roadway and existing embankments. A drainage culvert and ditch is located along the west side of the BNSF right-of-way. The Mojave River is located approximately 1.5 miles to the east of the project site, but is not located within the project limits. Site topography is depicted on the Site Plan, Figure 2.

4.3 Man-Made and Natural Features of Engineering and Construction Significance

The project footprint generally abuts a mix of undeveloped, commercial, and industrial land (parking lots and buildings). The man made features that may be impacted by the project include the existing roadways, embankments, the BNSF Railroad right-of-way, drainage culverts and utilities. The proposed project improvements are not anticipated to adversely impact the existing developments and existing features are not anticipated to adversely affect the project. The project layout is shown on the Site Plan, Figure 2.

4.4 Regional Geology and Seismicity

Site geologic information was obtained from the *Geologic Map of the Hesperia 15 Minute Quadrangle, San Bernardino County, California,* (Dibblee, 2008). The site is located in the southwestern portion of the Mojave Desert, approximately 17 miles northeast of the San Gabriel Mountains. Regionally, the site is in the San Bernardino Valley within the Mojave Desert between the Peninsular Range geomorphic province to the south and the Transverse Range geomorphic province to the north.

The site is underlain by previously placed fill underlain by Pleistocene Age older alluvial deposits consisting of sediment derived from the surrounding mountains and corresponding drainage systems (Dibblee, 1967). The San Bernardino Valley is filled with a thick sequence of Pleistocene to recent age sedimentary deposits both continental and marine in origin. A portion of the geologic map covering the site vicinity is presented as Figure 3. Published mapping of the site geology is consistent with the conditions encountered in our explorations.

The project site does not lie within or adjacent to an Alquist-Priolo Earthquake Fault Zone. In addition, the site is not located on any known "active" earthquake fault trace. Therefore, the potential for ground rupture due to onsite active faulting is considered to be low.

Site seismicity was analyzed based on Caltrans' *2013 Seismic Design Procedure*. This procedure is based on current Caltrans *Seismic Design Criteria (Appendix B), Deterministic PGA Map, ARS Online Report, Geotechnical Manual,* and USGS probabilistic seismic hazard analysis and tools. Based on Caltrans' web-based *ARS Online* application (V2.3.06, accessed January 17, 2015) and associated reports, key information for the controlling faults is summarized in Table 4.4 below.

TABLE 4.4
FAULT INFORMATION

Fault Name	North Frontal (West)	San Andreas (S. San Bernardino)	Helendale– So Lockhart
Fault ID#	279	325	241
M_{Max}	7.2	7.9	7.4
Fault Type	Rev	SS	SS
Fault Dip	49°	90°	90°
Dip Direction	S	V	V
Top of Rupture	0 km	0 km	0 km
Bottom of Rupture	15.8 km	12.8 km	13 km
Distance to Site (R_{RUP})	10.11 km	27.83 km	20.63 km
Depth to rock with Shear Wave Velocity of 1 km/sec ($Z_{1.0}$)	n/a*	n/a*	n/a*
Depth to rock with Shear Wave Velocity of 2.5 km/sec ($Z_{2.5}$)	n/a*	n/a*	n/a*

*The site is not located within sedimentary basin as mapped/defined by Caltrans' *Seismic Design Criteria (Appendix B);* therefore, Basin Factors are not applicable.

4.5 Soil Survey Mapping

We reviewed soil survey mapping from the United States Department of Agriculture (USDA). The online soil data are provided by the USDA National Resources Conservation Service (NRCS) at website http://websoilsurvey.nrcs.usda.gov.

Based on the information obtained from USDA mapping, the site is generally underlain by the following soil units:

- **Bryman (Unit 107):** A well-drained loamy fine sand, alluvium, derived from granite (Hydrologic Soil Group C).
- **Bryman (Unit 108):** A well-drained loamy fine sand, alluvium, derived from granite (Hydrologic Soil Group C).

Soil erosion is typically associated with high-intensity precipitation, steep slopes, and degree of weathering of surficial exposed rock. Based on the site topographic features, climate data, and the surficial materials encountered during our investigation, the proposed project may be impacted by soil erosion. To reduce impacts related to erosion, surface drainage flow should be appropriately collected and drained by appropriate drainage systems. All slope areas should be appropriately protected by appropriate erosion control measures.

5.0 FIELD EXPLORATION

The field investigation for this GDR was performed between November 18 and 20, 2014, and consisted of a site reconnaissance and drilling eight borings. The boring locations were based on preliminary project plans and information from Dokken Engineering. Table 5.1 summarizes the exploration locations, approximate surface elevations, and depths. The approximate boring locations are shown on the Site Plan, Figure 2.

TABLE 5.1
SUMMARY OF EXPLORATIONS

Exploration No.	Approximate Exploration Location				Exploration Depth (feet)
	Station No.	Line	Offset (feet)	Elevation (feet) [1]	
A-14-001	26+64	B.V. Rd CL	46.5L	2994	50.5
A-14-002	22+03	B.V. Rd CL	48.5R	2990	20.5
A-14-003	33+30	B.V. Rd CL	47.5L	2984	40.5
A-14-004	35+24	B.V. Rd CL	62.5R	2978	35.5
A-14-005	29+38	B.V. Rd CL	69.5R	2964	50.5
A-14-006	29+24	B.V. Rd CL	74.5L	2962	50.5
A-14-007	29+92	B.V. Rd CL	70R	2964	50.5
A-14-008	29+78	B.V. Rd CL	74.5L	2961	50.5

Note 1: Assumed elevations per 35% Project Plans.

5.1 Drilling and Sampling

Borings A-14-001, -003, and -004 were drilled using a track-mounted CME-75 drill rig equipped with a 8-inch diameter, hollow-stem augers; boring A-14-002 was drilled with hand auger equipment; and borings A-14-005 through A-14-008 were drilled using truck-mounted CME-75 drill rig equipped with 8-inch diameter, hollow-stem augers. Borings were advanced to depths ranging from approximately 20½ to 50½ feet.

Sampling during drilling was performed in general accordance with the current Caltrans' *Soil and Rock Logging, Classification and Presentation Manual* (2010). Soil samples were typically collected at approximately 2.5- to 5-foot intervals. Relatively undisturbed soil samples were obtained by driving an approximately 3-inch outside-diameter (OD) split-spoon sampler (California modified sampler) into the "undisturbed" soil mass with blows from a 140-pound hammer falling 30 inches. The sampler was equipped with 1-inch-long by 2.5-inch-diameter brass rings to facilitate sample removal and laboratory testing. Standard Penetration Tests (SPTs) were performed by driving a 2-inch OD split-spoon sampler 18 inches in general accordance with American Society for Testing and Materials (ASTM) D-1586. The number of blows required to drive the samplers (blow counts) the 18-inch sample drive (or portion thereof) are reported on the boring logs and Logs of Test Boring (LOTB) sheets included in Appendices A and C, respectively. Bulk samples of soil cuttings were also collected during the field exploration. In addition, a pocket penetrometer was used in the field to determine the consistency of cohesive soil.

The exploratory borings were sampled and logged by a staff engineer during the drilling operations. The soils encountered in the exploratory borings were classified in accordance with the Caltrans' *Soil and Rock Logging, Classification, and Presentation Manual* (2010). Upon completion of the field exploration program, the exploratory borings were backfilled with soil cuttings.

Samples were placed in sealed containers and transported to our laboratory for testing and further classification. Boring logs are included in Appendix A. The LOTB sheets in Caltrans format are presented in Appendix C.

6.0 GEOTECHNICAL TESTING

6.1 In-situ Testing

In-situ testing for this project included recording blow counts during sampling in our exploratory borings. In addition, a pocket penetrometer was used in the field to determine the consistency of cohesive soil.

6.2 Laboratory Testing

Laboratory tests were performed in accordance with California Test Methods (CTM) or generally accepted test methods of the ASTM. The types of the tests performed are listed below:

- In-Place Dry Density and Moisture Content: ASTM D2937 (CTM 226)
- Direct Shear Strength: ASTM D 3080
- Consolidation: ASTM D 2435
- Atterberg Limits: ASTM D 4318
- Grain Size Distribution: ASTM D 422
- Compaction Curve: D 1557
- R-value: CTM 301
- pH and Resistivity: CTM 643
- Sulfate Content: CTM 417
- Chloride Content: CTM 422

Test results and related information are provided in Appendix B. The results of dry density and moisture content testing are presented on the boring logs (Appendix A) and LOTB sheets (Appendix C).

7.0 GEOTECHNICAL CONDITIONS

7.1 Site Geology

Site geology and soil conditions are discussed in Sections 5.2 and 7.2, respectively.

7.1.1 Lithology

Detailed descriptions of subsurface conditions are presented in Section 7.2 of this report.

7.1.2 Structure

Detailed descriptions of subsurface conditions are presented in Section 7.2 of this report.

7.1.3 Natural Slope Stability

Natural slopes steeper than 2:1 (horizontal:vertical) were not observed within the project limits. The existing embankments are composed of fill presumably placed during the original construction of the Bear Valley Road overhead. No obvious signs of slope instability were observed in the fill slopes; the slopes generally appear to be in good condition.

7.2 Soil and Groundwater Conditions

7.2.1 Soil Conditions

The soil and groundwater conditions encountered are described in detail below and on the boring logs and LOTB sheets presented in Appendices A and C, respectively.

7.2.1.1 Fill

Existing fill was encountered in each of our borings. The fill encountered in our borings generally consisted of loose to medium dense silty sand (SP-SM) with varying amounts of gravel. The existing fill appears to be performing well and is considered suitable for continued support of the existing improvements.

7.2.1.2 Alluvium

Alluvium, characterized as Pleistocene age older alluvial fan deposits (Morton & Miller, 2003), was encountered in each of our borings. The alluvium encountered generally consists of medium dense to dense poorly graded sand (SP) and well graded sand (SW). The alluvium is considered suitable for continued support of the existing improvements.

7.2.2 Groundwater Conditions

Groundwater was not encountered in the borings excavated to a maximum depth of approximately 50½ feet during our subsurface evaluation and is not anticipated to be a significant impact to the design or construction of the project. Fluctuations of groundwater levels may occur due to variations in precipitation, temperature, and other factors. Depth to groundwater can also vary significantly due to localized pumping, irrigation practices, and seasonal fluctuations. Therefore, it is possible that future groundwater may be higher or lower than the levels observed during our investigation.

The *Bear Valley Road Cutoff Widen General Plan* includes LOTB sheets for four prior borings conducted at the site in 2001. The prior borings were conducted to maximum depths of approximately 74½ feet (corresponding to elevation 2,889). The LOTBs do not indicate that groundwater was encountered during the boring excavation.

7.3 Water

7.3.1 Surface Water

The site is not located in the immediate vicinity of any bodies of water or watercourses. The Mojave River originates in the Cady Mountains, east of Barstow. At its closest point, the Mojave River is located 1.3 miles east of the project site, but is not located within the project limits. Surface water is not expected to affect the proposed improvements.

7.3.1.1 Scour

No active watercourses exist within the project limits; therefore, scour is not expected to affect the proposed improvements.

7.3.1.2 Erosion

Soil erosion is typically associated with high-intensity precipitation, steep slopes, and degree of weathering of surficial exposed rock. Based on the site topographic features, climate data, and the surficial materials encountered during our investigation, the proposed project may be impacted by soil erosion. To reduce impacts related to erosion, surface drainage flow should be appropriately collected and drained by appropriate drainage systems. All slope areas should be appropriately protected by appropriate erosion control measures.

We recommend using surface treatments to minimize surficial erosion until adequate erosion-resistant vegetation can become established. All roadway drainage should be directed to appropriate collection and discharge facilities to prevent run-off from flowing over the tops of slopes.

7.3.2 Regional Groundwater

Based on the California Department of Water Resources (DWR) water data library (http://www.water.ca.gov/waterdatalibrary/), periodic groundwater measurements for a cluster of groundwater observation wells located approximately 1,200 feet south of the site was available for the period of March 1994 through September 2014. The four observation wells comprising the cluster (identified as state wells 04N04W03A001S, 04N04W03A002S, 04N04W03A003S, and 04N04W03A004S) were completed to depths ranging from approximately 235 to 790 feet below the existing ground surface. Periodic measurements in each well indicate variable groundwater elevations seasonally fluctuating between a high of approximately 2,806 feet MSL to a low of approximately 2,750 feet MSL corresponding to groundwater depths of 177 feet to 232 feet below ground surface, respectively. Groundwater was not encountered in the borings excavated to a maximum depth of approximately 50½ feet during our subsurface evaluation. The prior LOTBs do not indicate that groundwater was encountered during boring excavations conducted to maximum depths of approximately 74½ feet.

7.4 Project Site Seismicity

Seismic design of project structures should be developed in accordance with Caltrans' *2013 Seismic Design Procedure*. This procedure is based on current Caltrans *Seismic Design Criteria (Appendix B), Deterministic PGA Map, ARS Online Report*, *Geotechnical Services Design Manual*, and USGS probabilistic seismic hazard analysis and tools. The recommended design response spectrum for structures is discussed in Section 8.1.1.

7.4.1 Ground Motions

It is our opinion that the site could be subject to ground shaking in the event of an earthquake along the faults listed in Section 4.4 or other faults in Southern California. However, we do not consider the site to possess any seismic greater risk than that of the surrounding developments. The maximum earthquake event along the controlling faults may generate a horizontal peak ground acceleration (PGA) of approximately 0.54g at the project site, where "g" represents the acceleration due to gravity, based on the design response spectrum.

7.4.2 Ground Rupture

There are no known or suspected faults that cross the project alignment or near vicinity; therefore, ground rupture due to active faulting is not considered a hazard to the project.

8.0 GEOTECHNICAL ANALYSES AND DESIGN

Geotechnical analyses were performed to evaluate soil bearing capacity and settlement. These analyses were performed based on the results of in-situ and laboratory testing including blow counts, density, moisture content, shear strength, gradation, Atterberg Limits, and corrosion characteristics, as well as our experience with similar soils. These results are incorporated within the recommendations in this report.

8.1 Dynamic Analysis

Site seismicity for structures was analyzed based on *Caltrans 2013 Seismic Design Procedure*. Both the deterministic and probabilistic response spectrums for the site were estimated using Caltrans' *Deterministic Response Spectrum Spreadsheet, Probabilistic Response Spectrum Spreadsheet* (after USGS), *2008 USGS National Seismic Hazard Map* and the *ARS Online* web tools.

Site coordinates of 34.47128181°N and -117.2795248°W were used in the analysis. Based on the soil conditions encountered during site exploration, the site is underlain by medium dense to dense alluvial soils and most closely reflects a Caltrans Soil Type D. We calculated an average shear wave velocity in the upper 30 meters (V_{S30}) of approximately 280 meters per second (m/sec) based on the SPT values measured in borings A-14-006 and A-14-007 and the recommended procedures in Appendix A of Caltrans *Methodology for Developing Design Response Spectrum for Use in Seismic Design Recommendations*.

Both the deterministic response spectrum and the probabilistic response spectrum of the site were estimated using Caltrans' *Deterministic Response Spectrum Spreadsheet, Probabilistic Response Spectrum Spreadsheet* (after USGS), *2008 USGS National Seismic Hazard Map,* and the *ARS Online* web tools. Where distances to the controlling faults are less than 25 kilometers, near-field factors were applied in the analysis. The design response spectrum is the upper envelope of the spectral values of the deterministic response spectrum and the probabilistic response spectrum.

Based on our analysis, the probabilistic results control the design response spectrum for the project. The recommended design response spectra is presented as Figure 4 (Recommended Design Response Spectrum).

8.1.1 Liquefaction and Lateral Spreading

Liquefaction is a phenomenon in which loose, saturated and relatively cohesionless soil deposits located beneath the groundwater table lose strength during strong ground motions. Primary factors controlling liquefaction include intensity and duration of ground accelerations, characteristics of the subsurface soil, in-situ stress conditions, and depth to groundwater.

Based on the lack of groundwater within the upper 200 feet (see Section 7.3.2), the potential for liquefaction does not appear to be a hazard for the site. Since the potential for liquefaction is likely low, the potential for lateral spreading and other secondary effects, such as seismic-induced settlement, would also be low.

Dynamic compaction of dry and loose sands may occur during a major earthquake. Typically, settlements occur in thick beds of such soils. The soils underlying the site consist predominantly of sand that is generally dense to very dense and well consolidated. Based on these conditions, appreciable dry dynamic settlements are not anticipated.

8.2 Cuts and Excavations

Based on the currently available project plans, the roadway improvements will require cut slopes on the order of 8 to 21 feet in height will be required along the north side of Bear Valley Road between Sta. 37+00 and 41+00. Excavation for the construction of the bridge foundations is also anticipated; however, the necessary depth of excavation will be evaluated in the Final Foundation Report.

Cuts and excavations should be stable at inclinations of 2:1 or flatter. Based on the subsurface conditions encountered during field explorations, excavations at the site can likely be performed using conventional heavy-duty grading and excavation equipment.

8.2.1 Stability

It is the Contractor's responsibility to provide sufficient and safe support for excavation, as well as nearby utilities, structures and other improvements that could be damaged by earth movements. Temporary excavations should be in compliance with applicable governing agency regulations. The Contractor should also execute a monitoring program for structures in proximity to deep excavations so that appropriate modifications to the excavation/shoring system can be implemented to minimize the surface deflection or structure damage in a timely manner, if warranted. The Contractor should also provide a temporary dewatering system if excavations extend below the groundwater elevation or where seepage is encountered.

Assuming that fill materials meeting Caltrans Specification for structure backfill are used in the embankment, the proposed permanent 2H:1V slopes should have a factor of safety greater than 1.5 against deep-seated and shallow failures under static loading and a factor of safety greater than 1.1 under pseudo-static (seismic) loading. This conclusion is based on our experience with similar soil and rock types and slope configurations. If steeper slopes are planned, we should be consulted for additional recommendations and potential stability analyses, if necessary.

All slopes should be planted, drained, and maintained to reduce erosion. Slope irrigation (if used) should be kept to a minimum to just support the vegetation cover. Surface drainage should not be allowed to flow over the top of the slopes.

8.2.2 Rippability

Based on conditions encountered in our borings, the existing fill and younger alluvial soils can be excavated with light to moderate effort with conventional light-duty grading equipment.

8.2.3 Grading Factors

The onsite fills and alluvium meeting the project specification may be used as engineered fill. The laboratory tests performed on collected soil samples indicate that the average dry density of onsite soils is approximately 110 pounds per cubic foot (pcf) and the average maximum dry density is about 130 pcf.

For calculation of earthwork quantity, the fill and upper younger alluvium is estimated to have a shrinkage factor of about 15 percent for comparison of compacted in-place volumes to existing volumes (compacted to 95 percent relative compaction). This shrinkage factor is a rough estimate and will vary based on the actual relative compaction achieved in the field.

8.3 Embankments

Based on the information provided by Dokken Engineering, the existing fill embankments will be widened to accommodate the proposed bridge and roadway widening and improvements.

From a geotechnical perspective, embankments and fill slopes may be constructed at inclinations of 2:1 or flatter. Steeper slopes may be possible if soil reinforcement, engineered buttresses, or surface treatments are used. Such embankment slopes should be evaluated during the project design phase.

Based on the field explorations and experience in the area, soil generated from onsite and local excavations are likely suitable for use as embankment and general fill. However, some screening and selection may be required depending on excavation location and intended use. For example, select, low-expansive soil may be required within specific portions of the bridge approach embankments and near the abutments. All grading should be performed in conformance with Sections 6-3, 19-3, 19-5, and 19-6 of Caltrans' *Standard Specifications* or equivalent.

8.3.1 Materials for Fill

Excavated soil generated from cut operations at the site are suitable for use as general fill in structural areas provided they are examined and selectively placed during grading in accordance with the following recommendations:

- Deleterious material, material with greater than 3% organics, and debris should be exported from the site and not incorporated into structural fill. We anticipate limited quantities of these materials (primarily organics).
- Soil, rock, cobble, and boulders may be selectively incorporated into structural fill provided this material is less than 2 feet in maximum dimension. Rock or cementations greater than 2 feet in maximum dimension should not be used.
- Rock or cementations larger than 6 inches but less than 2 feet in maximum dimension may be incorporated into structural fill, but shall be limited to areas outside of planned underground utility excavations, and at least 5 feet from slope faces. Nesting of rock should be avoided.
- Fill material in areas with underground utilities, proposed foundations, and areas within 5 feet of slope faces should consist of 6-inch-minus material.

Backfill placed behind retaining walls should consist of "structure backfill" meeting Section 19-3.02B of Caltrans' *Standard Specifications*. In addition to the criteria shown in Section 19.3.02B, structure backfill should have a "very low" to "low" expansion potential (Expansion Index of 50 or less).

Import fill material should be primarily granular with a "very low" to "low" expansion potential (Expansion Index less than 50), a Plasticity Index less than 15, a minimum R-value of 50, be free of organic material and construction debris, and not contain rock larger than 6 inches in greatest dimension.

Environmental characteristics and corrosion potential of import soil materials should also be considered. Proposed import materials should be sampled, tested, and approved prior to its transportation to the site.

8.3.2 Fill Area Preparation and Fill Placement

Areas to be developed should be cleared and stripped of obstructions, trees, bushes, grass, roots, and the upper few inches of soil containing organic debris. Soils/organics removed by stripping can be transported offsite or stockpiled for use in landscaping. Existing drainage and utility lines or other existing subsurface structures that are not to be utilized, if any, should be removed, destroyed or abandoned in compliance with applicable regulations.

In general, all loose, soft, or wet surficial soil in the areas planned to receive new improvements or fill materials should be removed to expose competent materials. The actual removal depth is dependent upon the depth to competent materials.

Relative compaction for new fill should conform per Caltrans' *Standard Specifications*, Sections 19-3, 19-5, and 19-6. New embankment fill placed on sloping ground and adjacent to existing embankments/slopes should be keyed and benched in accordance with Caltrans' *Standard Specifications*.

All earthwork, grading, and engineered fill placement should be performed in conformance with Sections 6-3, 19-3, 19-5, and 19-6 of Caltrans' *Standard Specifications*. Ponding or jetting of backfill should not be permitted.

8.3.3 Embankment Stability

Proposed embankment fills will be constructed with slope inclinations of 2:1 or flatter. Embankments constructed in accordance with Caltrans requirements should possess adequate factor of safety against slope instability.

8.3.4 Fill Settlement

For areas to receive new fills, surface settlement will occur due to the compression in the existing fills, older alluvium, and new fills. The magnitude of surface settlement will be related to the thickness of the new fill and the compressive characters of the subsurface soils. Because the on-site materials are basically granular in nature, compression settlement is expected to be essentially complete in a short period of time following the placement of the new fill. Specific settlement periods are not considered necessary.

8.4 Retaining Walls

Based on the current project plans, no new retaining walls are proposed for this project.

8.5 Other

8.5.1 Corrosion Studies

According to Caltrans' *Corrosion Guidelines* (Version 2.0, November 2012), soils are considered corrosive to foundation elements if one or more of the following conditions exist: chloride concentration is 500 parts per million (ppm) or greater, or sulfate concentration is 2,000 ppm or greater, or the potential of hydrogen (pH) is 5.5 or less. Resistivity serves as an indicator parameter for the possible presence of soluble salts and is not included as a parameter to define a corrosive area for structures. A minimum resistivity value for soil and/or water less than 1,000 ohm-centimeters may indicate the presence of high quantities of soluble salts and a higher propensity for corrosion.

Resistivity, pH, chlorides, and sulfates tests were performed on two samples selected at random to generally evaluate the corrosion potential to subsurface structures. These tests were performed in accordance with CTM Nos. 417, 643,and 422. The results are presented in Appendix B and should be considered for design of underground structures.

Proposed improvements in contact with the ground should be designed and constructed in accordance with Caltrans' *Standard Specifications* and good construction practices. Geocon does not practice in the field of corrosion engineering. If corrosion sensitive improvements are planned, it is recommended that further evaluations by a corrosion engineer be performed to incorporate the necessary precautions to avoid premature corrosion on buried metal pipes and concrete structures in direct contact with the soils.

8.5.2 Culverts

The available project plans depict an existing 10-foot by 4-foot reinforced concrete box culvert which is perpendicular to the roadway alignment. The culvert crosses the roadway alignment at Sta. 29+12, just west of bent 2. The culver underlies the toe of the slope descending from abutment 1. The culvert is reported to have an inlet invert elevation of approximately 2955 feet above Mean Sea Level (MSL) and an outlet invert elevation of approximately 2952 feet MSL.

An existing 36-inch ACP drainpipe also crosses the roadway alignment at Sta. 30+12, which is just east of bent 3. The drainpipe is reported to have an invert elevations between 2956 and 2958 feet MSL.

Based on the current available project plans, widening of the existing embankment will result in fill placed over the existing culvert and ACP drainpipe inlet and outlet. Although project plans do not depict any improvements to maintain the existing culvert and ACP drainpipe, it is anticipated that both structures will be extended.

The culvert and drainpipe extension should be designed to withstand the overburden pressures and surcharges. Excavation, backfill and culvert bedding shall conform to the provisions in Section 19-3 of the Caltrans Standard Specifications or equivalent, except at locations where pipe is to be backfilled with concrete. Backfill should have an Expansion Index (EI) no greater than 50 and a Sand Equivalent of 20 or greater. Ponding or jetting of backfill should not be permitted.

An allowable bearing capacity of 4,000 pounds per square foot (psf) can be used provided the culverts are at least founded 12 inches below adjacent grades bearing entirely in structural fill or undisturbed alluvium. The allowable pressures should be compared to the increase in pressure caused by the culvert and new fill above the culvert. Based on the subsurface conditions encountered in our borings, the total settlements of culverts imposing the maximum allowable bearing pressure are not expected to exceed ¾ inch with a maximum differential settlement of ½ inch. However, the majority of the settlement is expected to be completed shortly following the completion of construction. The corrosion test results presented in Appendix B should be considered for design of culverts and other underground structures.

8.5.3 Drainage Design

A site drainage system for storm management should include pollution prevention best management practices (BMPs) and /or treatment BMPs in accordance with Caltrans' *Storm Water Quality Handbook* (2010). The site topographic features, groundwater condition, anticipated amounts of rainfall and runoff, and the infiltration characteristics of on-site materials should be considered during the design of site drainage system.

9.0 MATERIAL SOURCES

This study did not include the evaluation of potential sources of import materials.

10.0 MATERIAL DISPOSAL

Cuts and fills are anticipated along the project alignment. If required, information regarding disposal of potentially unsuitable and/or surplus materials should be provided by the Resident Engineer and District Materials Engineer.

11.0 CONSTRUCTION CONSIDERATIONS

11.1 Construction Advisories

Traffic control with lane and shoulder closures and detours are anticipated during construction. In addition, there are a significant number of underground utilities along the proposed widening alignment. The Contractor should verify these utility conditions and plan the construction activities accordingly.

11.2 Construction Considerations that Influence Specifications

All grading should be performed in conformance with Section 19 of Caltrans' *Standard Specifications* or equivalent. Backfill placed behind retaining walls should have a very low to low expansion potential. The extent and placement of the low-expansive soils should conform to Caltrans' *Standard Specifications* Section 19-5.03.

The Contractor should verify the existing utility line conditions. These areas should not be used for stockpiling of construction materials. Any conflicts should be reviewed prior to construction.

11.3 Construction Monitoring and Instrumentation

Site grading, footing excavation, removal of any unsuitable soils or oversize material, and replacement and compaction of backfill and subgrade should be observed by the Geotechnical Engineer of Record. Faces of cut slopes in native materials should be observed by an engineering geologist for indications of instability. Appropriate field tests should be conducted to provide quality control, quality assurance for structural fills and related earthwork elements.

The Contractor should execute the monitoring program for structures in proximity to any deep excavations so that appropriate modifications to the excavation/shoring system and/or foundation type are implemented to minimize the surface deflection or structure damage in a timely manner.

11.4 Hazardous Waste Considerations

This geotechnical study did not include the determination of the existence of possible hazardous materials. If any hazardous materials are encountered during construction, regulatory officials should be notified immediately.

11.5 Differing Site Conditions

Differing site conditions are conditions unusual to the site or are conditions that were not encountered during the field investigation. The subsurface conditions described in this report are based on available exploration data. These explorations depict subsurface conditions only at the locations explored. Because of the variability from place to place within soils in general, and the nature of geologic depositions, subsurface conditions could change between the explored locations. It is imperative that the designers, the resident engineer, and the Contractor notify the geotechnical engineer immediately upon recognition of any condition that differs from that described in this report. Additional recommendations could be provided if such conditions arise.

12.0 RECOMMENDATIONS AND SPECIFICATIONS

If the designers have questions or issues regarding any of the recommendations in this report, or if conditions are found to be different during construction, the geotechnical staff who prepared this report should be contacted. Additional fieldwork, analysis, or changes in recommendations may be required.

This report provides the following geotechnical design and construction recommendations for the proposed improvements:

- Seismic design parameters are presented in Section 8.1.
- Cuts and excavations including stability, rippability, and grading factors are presented in Section 8.2.
- Embankments including the embankment fill area preparation and fill placement, embankment stability, and the embankment settlement are presented in Section 8.3.
- Corrosion information is presented in Section 8.5.
- Construction considerations are presented in Section 11.
- Unless otherwise stated in the special provisions, all specifications should conform to Caltrans' *Standard Specifications*, latest edition.

13.0 CLOSURE

13.1 Foundation and Grading Plan Review

Geocon should review the grading plans and foundation plans prior to final design submittal to determine if additional analysis and/or recommendations are required.

13.2 Limitations and Uniformity of Conditions

The recommendations of this report pertain only to the site investigated and are based upon the assumption that the soil conditions do not deviate from those disclosed in the investigation. If any variations or undesirable conditions are encountered during construction, or if the proposed construction will differ from that anticipated herein, we should be notified so that supplemental recommendations can be given. The evaluation or identification of the potential presence of hazardous materials or environmental contamination was not part of our scope of services.

This report is issued with the understanding that it is the responsibility of the owner or their representative to ensure that the information and recommendations contained herein are brought to the attention of the design team for the project and incorporated into the plans and specifications and the necessary steps are taken to see that the Contractor and subcontractors carry out such recommendations in the field.

The recommendations contained in this report are preliminary until verified during construction by representatives of our firm. Changes in the conditions of a property can occur with the passage of time, whether they are due to natural processes or the works of man on this or adjacent properties. Additionally, changes in applicable or appropriate standards may occur, whether they result from legislation or the broadening of knowledge. Accordingly, the findings of this report may be invalidated partially or wholly by changes outside our control. Therefore, this report is subject to review and should not be relied upon after a period of three years.

Our professional services were performed, our findings obtained, and our recommendations prepared in accordance with generally accepted geotechnical engineering principles and practices used in the site area at this time. No warranty is provided, express or implied.

14.0 REFERENCES

1. California Department of Transportation, 2014, *ARS Online Version 2.3.06* http://dap3.dot.ca.gov/ARS_Online/ , accessed January 2014.

2. California Department of Transportation, *Corrosion Guidelines, Version 2.0*, November 2012.

3. California Department of Transportation, *Geotechnical Manual*, 2012.

4. California Department of Transportation, *Guidelines for Preparing Geotechnical Design Reports*, April, 2013.

5. California Department of Transportation, *Highway Design Manual*, 2014.

6. California Department of Transportation, 2013, *Seismic Design Criteria, Version 1.7.*

7. California Department of Transportation, *Soil and Rock Logging, Classification, and Presentation Manual*, 2010.

8. California Department of Transportation, 2010, *Standard Specifications.*

9. California Department of Transportation, Division of Engineering Services, *Foundation Manual*, 2010.

10. California Department of Water Resources water data library, http://www.water.ca.gov/waterdatalibrary/, accessed January 2015.

11. County of San Bernardino Department of Transportation, [As-Built] Plans for Construction on Bear Valley Cutoff, *Apatite Street to Tamarisk Avenue*, July 24, 1979, 30 sheets.

12. Dokken Engineering, *Bear Valley Road Overhead General Plan, Sheets 1 and 2*, March 2012.

13. Dokken Engineering, *City of Victorville Street Improvements Plans for Bear Valley Road Overhead at BNSF Railroad, 35% Project Plans, Sheets 1 through 1*, undated.

14. Lim & Nascimento Engineering, Bear Valley Cutoff Widen General Plan, Sheets 1 through 21, dated March 3, 2003.

15. United States Department of Agriculture, *Web Soil Survey*, http://websoilsurvey.nrcs.usda.gov, accessed January 2015.

16. USGS, *2008 Interactive Deaggregations*, http://geohazards.usgs.gov/deaggint/2008/.

17. Unpublished reports, aerial photographs, and maps on file with Geocon.

18. Western Regional Climate Center, http://www.wrcc.dri.edu/, accessed January 2015

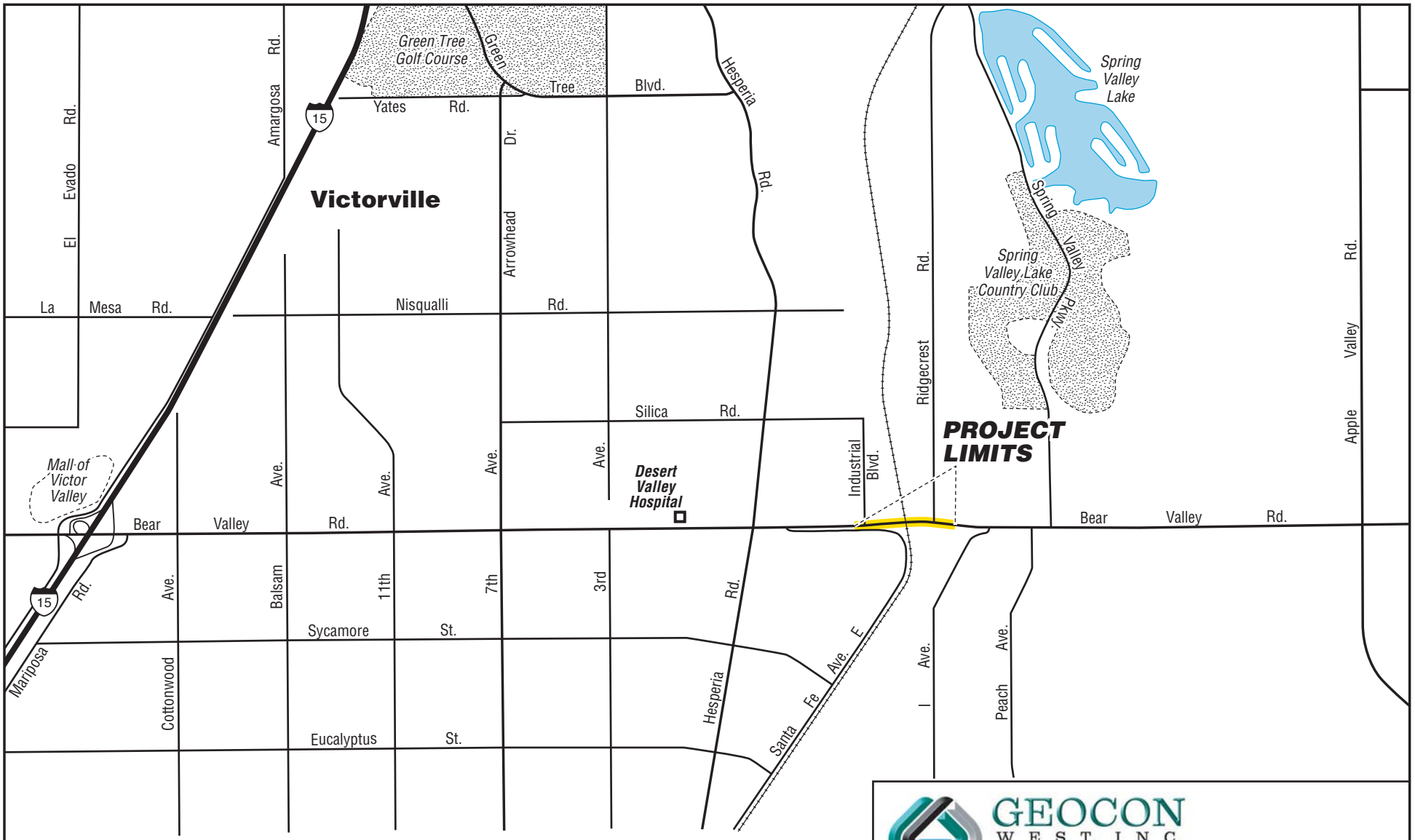

GEOCON WEST, INC.
3303 N. SAN FERNANDO BLVD. – SUITE 100 - BURBANK, CA. 91504
PHONE 818 841-8388 – FAX 818 841-1704

Bear Valley Overhead at BNSF

Victorville, California

VICINITY MAP

A9072-06-01	FEB 2017	Figure 1

BASE PLAN PROVIDED BY DOKKEN

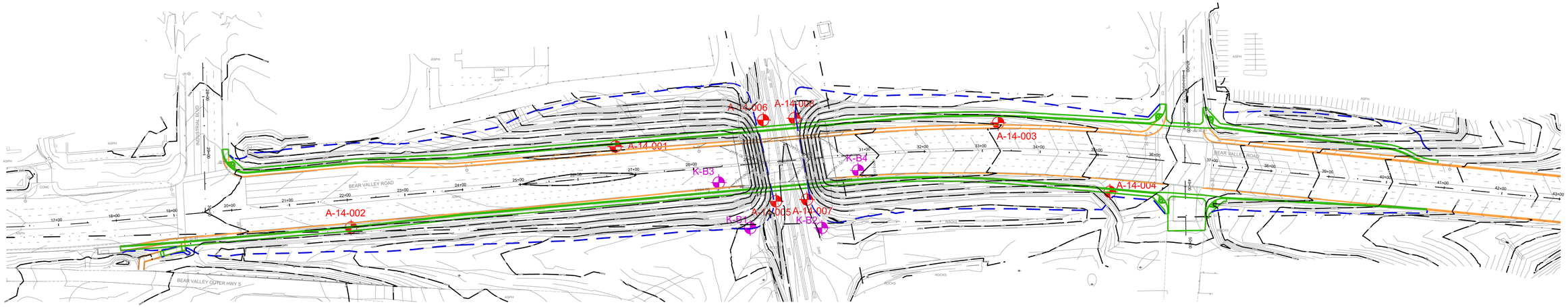

LEGEND

A-14-008	Boring Location and Number
K-B4	Prior Boring Location and Number (Kleinfelder)
	Limits of Proposed Grading
	Existing Curb and Sidewalk
	Proposed Curb and Sidewalk

0 100' 200'

GEOCON WEST, INC.

ENVIRONMENTAL GEOTECHNICAL MATERIALS
3303 N. SAN FERNANDO BLVD. - SUITE 100 - BURBANK, CA 91504
PHONE (818) 841-8388 - FAX (818) 841-1704

Drafted by: JTA | Checked by: NDB

SITE PLAN

BEAR VALLEY ROAD OVERHEAD
AT BNSF RAILROAD
CITYOF VICTORVILLE, CALIFORNIA

FEB 2017 | PROJECT NO. A9072-06-01 | FIG. 2

GEOLOGIC UNITS

Qdg - Disturbed ground (late Holocene)
Qw2 - Very young wash deposits, Unit 2 (late Holocene)
Qw1 - Very young wash deposits, Unit 1 (late Holocene)
Qyw - Young wash deposits (early Holocene)
Qyw3 - Young wash deposits, Unit 3 (early Holocene)
Qyw2 - Young wash deposits, Unit 2 (early Holocene)
Qyw1 - Young wash deposits, Unit 1 (early Holocene)
Qyf3 - Young alluvial-fan deposits, Unit 3 (Holocene and late Pleistocene)
Qya - Young alluvial-valley deposits (Holocene and late Pleistocene)

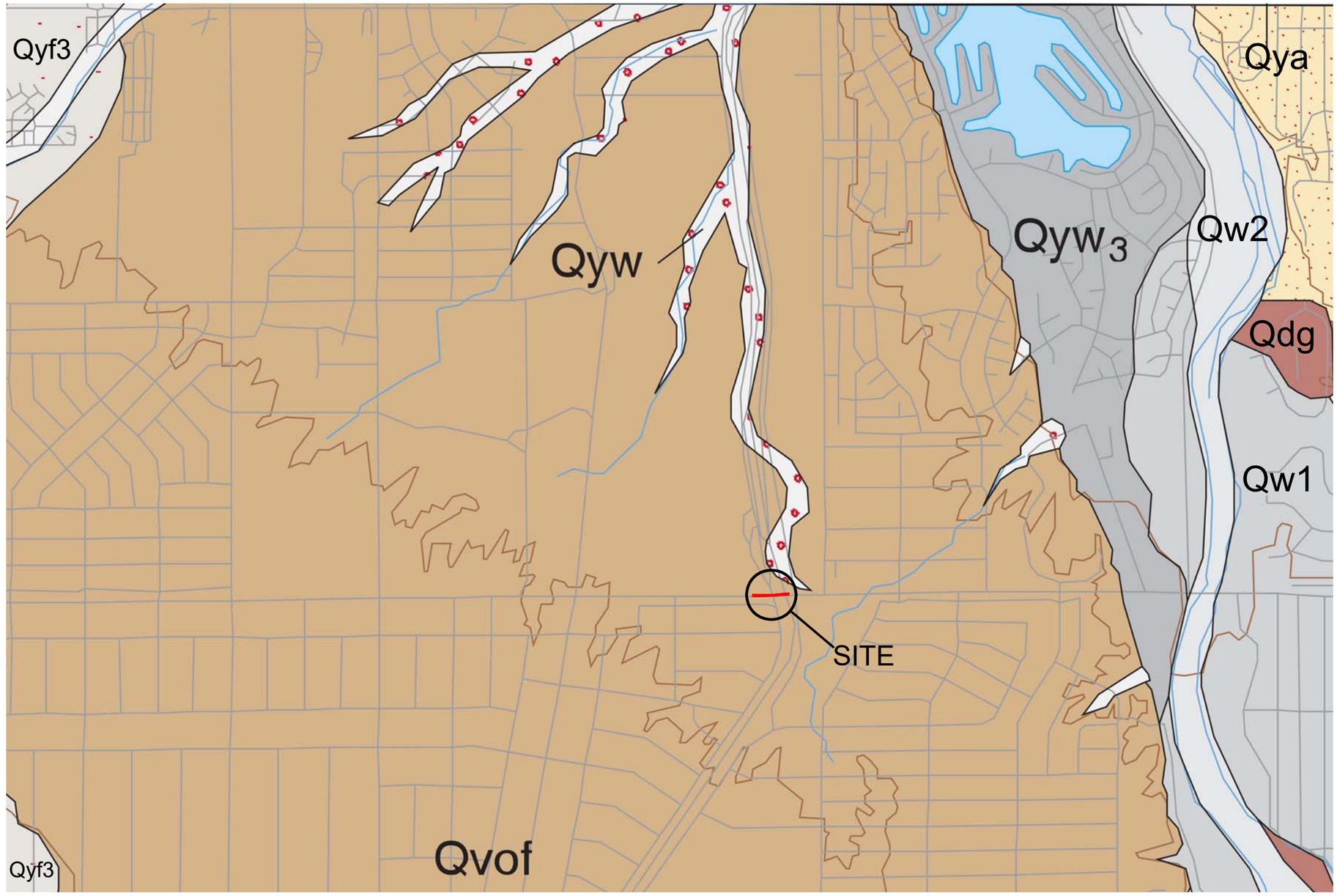

Reference: MORTON, D. M., MILLER, F. K., 2003, PRELIMINARY GEOLOGIC MAP OF THE SAN BERNARDINO 30' X 60' QUADRANGLE, CALIFORNIA

0 2000' 4000'

GEOCON WEST, INC.
ENVIRONMENTAL GEOTECHNICAL MATERIALS
3303 N. SAN FERNANDO BLVD. - SUITE 100 - BURBANK, CA 91504
PHONE (818) 841-8388 - FAX (818) 841-1704

Drafted by: RA | Checked by: GAK

GEOLOGIC MAP

BEAR VALLEY ROAD OVERHEAD
AT BNSF RAILROAD
CITYOF VICTORVILLE, CALIFORNIA

FEB 2017 | PROJECT NO. A9072-06-01 | FIG.3

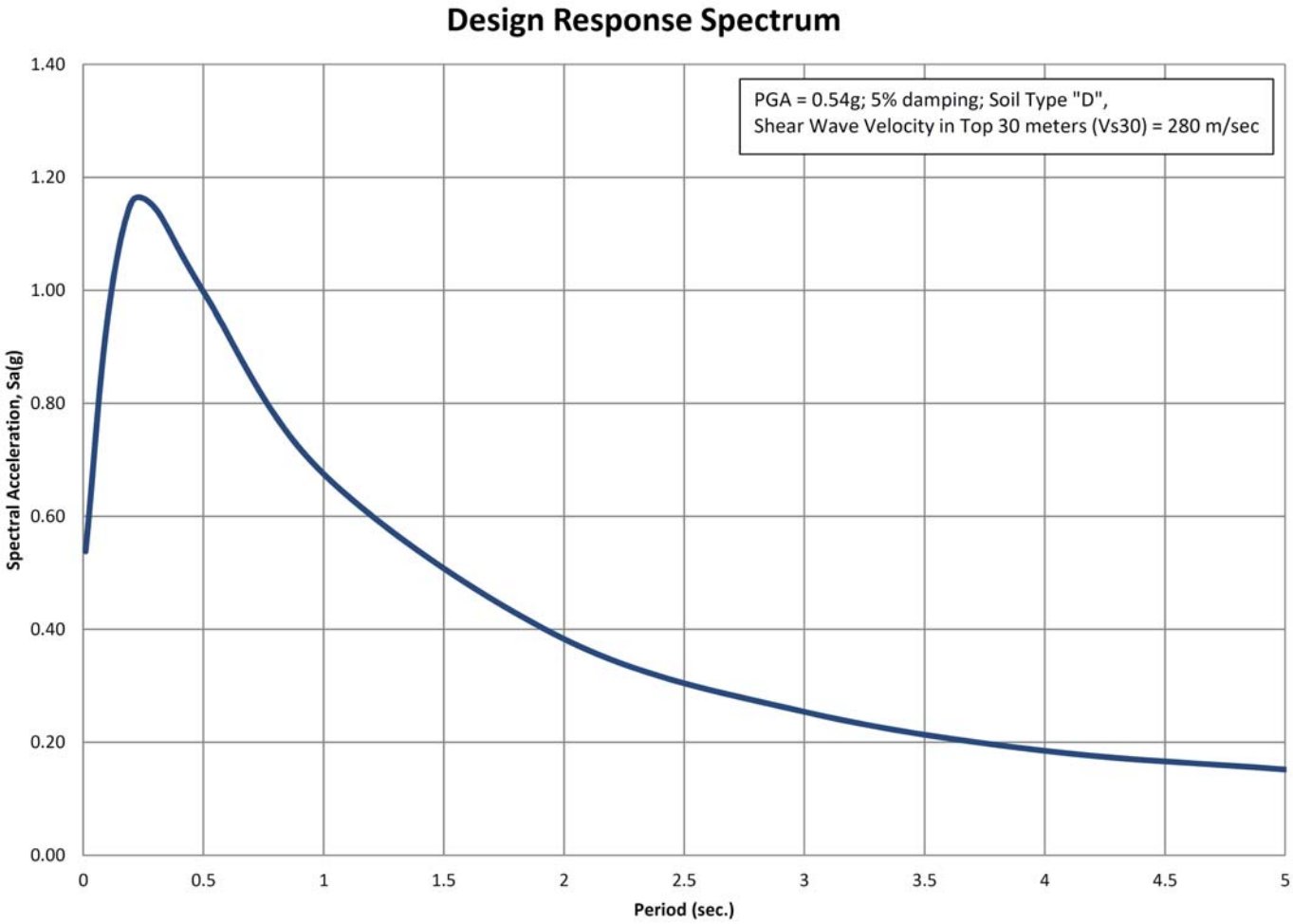

GEOCON
WEST, INC.

ENVIRONMENTAL GEOTECHNICAL MATERIALS
3303 N. SAN FERNANDO BLVD. - SUITE 100 - BURBANK, CA 91504
PHONE (818) 841-8388 - FAX (818) 841-1704

Drafted by: JTA	Checked by: NDB

RECOMMENDED DESIGN RESPONSE SPECTRUM

BEAR VALLEY ROAD OVERHEAD
AT BNSF RAILROAD
CITYOF VICTORVILLE, CALIFORNIA

FEB 2017	PROJECT NO. A9072-06-01	FIG. 4

APPENDIX A

APPENDIX A

FIELD INVESTIGATION

The field investigation for this Geotechnical Design Report (GDR) was performed between November 18 and 20, 2014, and consisted of a site reconnaissance and drilling eight borings. The explorations were located based on preliminary project plans and information from Dokken Engineering. Table A-1 is a summary of the exploration locations, approximate surface elevations, and depths. The boring locations are shown on the Site Plan, Figure 2.

TABLE A-1
SUMMARY OF EXPLORATIONS

Exploration No.	Approximate Exploration Location				Exploration Depth (feet)
	Station No.	Line	Offset (feet)	Elevation (feet)	
A-14-001	26+64	B.V. Rd CL	46.5L	2994	50.5
A-14-002	22+03	B.V. Rd CL	48.5R	2990	20.5
A-14-003	33+30	B.V. Rd CL	47.5L	2984	40.5
A-14-004	35+24	B.V. Rd CL	62.5R	2978	35.5
A-14-005	29+38	B.V. Rd CL	69.5R	2964	50.5
A-14-006	29+24	B.V. Rd CL	74.5L	2962	50.5
A-14-007	29+92	B.V. Rd CL	70R	2964	50.5
A-14-008	29+78	B.V. Rd CL	74.5L	2961	50.5

Borings A-14-001, -003, and -004 were drilled using a track-mounted CME-75 drill rig equipped with a 8-inch diameter, hollow-stem augers; boring A-14-002 was drilled with hand auger equipment; and borings A-14-005 through A-14-008 were drilled using truck-mounted CME-75 drill rig equipped with 8-inch diameter, hollow-stem augers. Borings were advanced to depths ranging from approximately 20½ to 50½ feet.

Sampling during drilling was performed in general accordance with the current Caltrans' *Soil and Rock Logging, Classification and Presentation Manual* (2010). Soil samples were typically collected at approximately 2.5- to 5-foot intervals. Relatively undisturbed soil samples were obtained by driving an approximately 3-inch outside-diameter (OD) split-spoon sampler (California modified sampler) into the "undisturbed" soil mass with blows from a 140-pound hammer falling 30 inches. The sampler was equipped with 1-inch-long by 2.5-inch-diameter brass ring sample tubes to facilitate sample removal and laboratory testing. Standard Penetration Tests (SPTs) were performed by driving a 2-inch OD split-spoon sampler 18 inches in general accordance with American Society for Testing and Materials (ASTM) D-1586. The number of blows required to drive the samplers (blow counts) the last 12 inches of the 18-inch sample drive (or portion thereof) are reported on the logs of borings and Logs of Test Boring (LOTB) sheets included in Appendix C. Bulk samples of soil cuttings were also collected during the field exploration. In addition, a pocket penetrometer was used in the field to determine the consistency of cohesive soil.

The exploratory borings were sampled and logged by a staff engineer during the drilling operations. The soils encountered in the exploratory borings were classified in accordance with the Caltrans' *Soil and Rock Logging, Classification, and Presentation Manual* (2010). Upon completion of the field exploration program, the exploratory borings were backfilled with soil cuttings.

All samples were sealed in containers and transported to our laboratory for testing and further classification. The Log of Test Borings (LOTB) sheets in Caltrans format are presented in Appendix C.

GROUP SYMBOLS AND NAMES

Graphic / Symbol	Group Names
GW	Well-graded GRAVEL Well-graded GRAVEL with SAND
GP	Poorly graded GRAVEL Poorly graded GRAVEL with SAND
GW-GM	Well-graded GRAVEL with SILT Well-graded GRAVEL with SILT and SAND
GW-GC	Well-graded GRAVEL with CLAY (or SILTY CLAY) Well-graded GRAVEL with CLAY and SAND (or SILTY CLAY and SAND)
GP-GM	Poorly graded GRAVEL with SILT Poorly graded GRAVEL with SILT and SAND
GP-GC	Poorly graded GRAVEL with CLAY (or SILTY CLAY) Poorly graded GRAVEL with CLAY and SAND (or SILTY CLAY and SAND)
GM	SILTY GRAVEL SILTY GRAVEL with SAND
GC	CLAYEY GRAVEL CLAYEY GRAVEL with SAND
GC-GM	SILTY, CLAYEY GRAVEL SILTY, CLAYEY GRAVEL with SAND
SW	Well-graded SAND Well-graded SAND with GRAVEL
SP	Poorly graded SAND Poorly graded SAND with GRAVEL
SW-SM	Well-graded SAND with SILT Well-graded SAND with SILT and GRAVEL
SW-SC	Well-graded SAND with CLAY (or SILTY CLAY) Well-graded SAND with CLAY and GRAVEL (or SILTY CLAY and GRAVEL)
SP-SM	Poorly graded SAND with SILT Poorly graded SAND with SILT and GRAVEL
SP-SC	Poorly graded SAND with CLAY (or SILTY CLAY) Poorly graded SAND with CLAY and GRAVEL (or SILTY CLAY and GRAVEL)
SM	SILTY SAND SILTY SAND with GRAVEL
SC	CLAYEY SAND CLAYEY SAND with GRAVEL
SC-SM	SILTY, CLAYEY SAND SILTY, CLAYEY SAND with GRAVEL
PT	PEAT
	COBBLES COBBLES and BOULDERS BOULDERS

Graphic / Symbol	Group Names
CL	Lean CLAY Lean CLAY with SAND Lean CLAY with GRAVEL SANDY lean CLAY SANDY lean CLAY with GRAVEL GRAVELLY lean CLAY GRAVELLY lean CLAY with SAND
CL-ML	SILTY CLAY SILTY CLAY with SAND SILTY CLAY with GRAVEL SANDY SILTY CLAY SANDY SILTY CLAY with GRAVEL GRAVELLY SILTY CLAY GRAVELLY SILTY CLAY with SAND
ML	SILT SILT with SAND SILT with GRAVEL SANDY SILT SANDY SILT with GRAVEL GRAVELLY SILT GRAVELLY SILT with SAND
OL	ORGANIC lean CLAY ORGANIC lean CLAY with SAND ORGANIC lean CLAY with GRAVEL SANDY ORGANIC lean CLAY SANDY ORGANIC lean CLAY with GRAVEL GRAVELLY ORGANIC lean CLAY GRAVELLY ORGANIC lean CLAY with SAND
OL	ORGANIC SILT ORGANIC SILT with SAND ORGANIC SILT with GRAVEL SANDY ORGANIC SILT SANDY ORGANIC SILT with GRAVEL GRAVELLY ORGANIC SILT GRAVELLY ORGANIC SILT with SAND
CH	Fat CLAY Fat CLAY with SAND Fat CLAY with GRAVEL SANDY fat CLAY SANDY fat CLAY with GRAVEL GRAVELLY fat CLAY GRAVELLY fat CLAY with SAND
MH	Elastic SILT Elastic SILT with SAND Elastic SILT with GRAVEL SANDY elastic SILT SANDY elastic SILT with GRAVEL GRAVELLY elastic SILT GRAVELLY elastic SILT with SAND
OH	ORGANIC fat CLAY ORGANIC fat CLAY with SAND ORGANIC fat CLAY with GRAVEL SANDY ORGANIC fat CLAY SANDY ORGANIC fat CLAY with GRAVEL GRAVELLY ORGANIC fat CLAY GRAVELLY ORGANIC fat CLAY with SAND
OH	ORGANIC elastic SILT ORGANIC elastic SILT with SAND ORGANIC elastic SILT with GRAVEL SANDY elastic ELASTIC SILT SANDY ORGANIC elastic SILT with GRAVEL GRAVELLY ORGANIC elastic SILT GRAVELLY ORGANIC elastic SILT with SAND
OL/OH	ORGANIC SOIL ORGANIC SOIL with SAND ORGANIC SOIL with GRAVEL SANDY ORGANIC SOIL SANDY ORGANIC SOIL with GRAVEL GRAVELLY ORGANIC SOIL GRAVELLY ORGANIC SOIL with SAND

FIELD AND LABORATORY TESTS

C	Consolidation (ASTM D 2435-04)
CL	Collapse Potential (ASTM D 5333-03)
CP	Compaction Curve (CTM 216 - 06)
CR	Corrosion, Sulfates, Chlorides (CTM 643 - 99; CTM 417 - 06; CTM 422 - 06)
CU	Consolidated Undrained Triaxial (ASTM D 4767-02)
DS	Direct Shear (ASTM D 3080-04)
EI	Expansion Index (ASTM D 4829-03)
M	Moisture Content (ASTM D 2216-05)
OC	Organic Content (ASTM D 2974-07)
P	Permeability (CTM 220 - 05)
PA	Particle Size Analysis (ASTM D 422-63 [2002])
PI	Liquid Limit, Plastic Limit, Plasticity Index (AASHTO T 89-02, AASHTO T 90-00)
PL	Point Load Index (ASTM D 5731-05)
PM	Pressure Meter
PP	Pocket Penetrometer
R	R-Value (CTM 301 - 00)
SE	Sand Equivalent (CTM 217 - 99)
SG	Specific Gravity (AASHTO T 100-06)
SL	Shrinkage Limit (ASTM D 427-04)
SW	Swell Potential (ASTM D 4546-03)
TV	Pocket Torvane
UC	Unconfined Compression - Soil (ASTM D 2166-06) Unconfined Compression - Rock (ASTM D 2938-95)
UU	Unconsolidated Undrained Triaxial (ASTM D 2850-03)
UW	Unit Weight (ASTM D 4767-04)
VS	Vane Shear (AASHTO T 223-96 [2004])

SAMPLER GRAPHIC SYMBOLS

- Standard Penetration Test (SPT)
- Standard California Sampler
- Modified California Sampler
- Shelby Tube
- Piston Sampler
- NX Rock Core
- HQ Rock Core
- Bulk Sample
- Other (see remarks)

DRILLING METHOD SYMBOLS

- Auger Drilling
- Rotary Drilling
- Dynamic Cone or Hand Driven
- Diamond Core

WATER LEVEL SYMBOLS

- First Water Level Reading (during drilling)
- Static Water Level Reading (short-term)
- Static Water Level Reading (long-term)

GEOCON WEST, INC.
Geocon West, Inc.
Environmental Geotechnical Materials
3303 N. San Fernando Blvd. - Suite 100
Burbank, CA 91504

BORING LOG LEGEND

Bear Valley Road overhead at BNSF Railroad

Date	Geocon Project No.	SHEET
JAN 2017	A9072-06-01	1 of 2

CONSISTENCY OF COHESIVE SOILS

Descriptor	Unconfined Compressive Strength (tsf)	Pocket Penetrometer (tsf)	Torvane (tsf)	Field Approximation
Very Soft	< 0.25	< 0.25	< 0.12	Easily penetrated several inches by fist
Soft	0.25 - 0.50	0.25 - 0.50	0.12 - 0.25	Easily penetrated several inches by thumb
Medium Stiff	0.50 - 1.0	0.50 - 1.0	0.25 - 0.50	Can be penetrated several inches by thumb with moderate effort
Stiff	1.0 - 2.0	1.0 - 2.0	0.50 - 1.0	Readily indented by thumb but penetrated only with great effort
Very Stiff	2.0 - 4.0	2.0 - 4.0	1.0 - 2.0	Readily indented by thumbnail
Hard	> 4.0	> 4.0	> 2.0	Indented by thumbnail with difficulty

APPARENT DENSITY OF COHESIONLESS SOILS

Descriptor	SPT N_{60} - Value (blows / foot)
Very Loose	0 - 4
Loose	5 - 10
Medium Dense	11 - 30
Dense	31 - 50
Very Dense	> 50

MOISTURE

Descriptor	Criteria
Dry	Absence of moisture, dusty, dry to the touch
Moist	Damp but no visible water
Wet	Visible free water, usually soil is below water table

PERCENT OR PROPORTION OF SOILS

Descriptor	Criteria
Trace	Particles are present but estimated to be less than 5%
Few	5 to 10%
Little	15 to 25%
Some	30 to 45%
Mostly	50 to 100%

SOIL PARTICLE SIZE

Descriptor		Size
Boulder		> 12 inches
Cobble		3 to 12 inches
Gravel	Coarse	3/4 inch to 3 inches
	Fine	No. 4 Sieve to 3/4 inch
Sand	Coarse	No. 10 Sieve to No. 4 Sieve
	Medium	No. 40 Sieve to No. 10 Sieve
	Fine	No. 200 Sieve to No. 40 Sieve
Silt and Clay		Passing No. 200 Sieve

PLASTICITY OF FINE-GRAINED SOILS

Descriptor	Criteria
Nonplastic	A 1/8-inch thread cannot be rolled at any water content.
Low	The thread can barely be rolled, and the lump cannot be formed when drier than the plastic limit.
Medium	The thread is easy to roll, and not much time is required to reach the plastic limit; it cannot be rerolled after reaching the plastic limit. The lump crumbles when drier than the plastic limit.
High	It takes considerable time rolling and kneading to reach the plastic limit. The thread can be rerolled several times after reaching the plastic limit. The lump can be formed without crumbling when drier than the plastic limit.

CEMENTATION

Descriptor	Criteria
Weak	Crumbles or breaks with handling or little finger pressure.
Moderate	Crumbles or breaks with considerable finger pressure.
Strong	Will not crumble or break with finger pressure.

NOTE: This legend sheet provides descriptors and associated criteria for required soil description components only. Refer to Caltrans Soil and Rock Logging, Classification, and Presentation Manual (July 2007), Section 2, for tables of additional soil description components and discussion of soil description and identification.

LOGGED BY	BEGIN DATE	COMPLETION DATE	BOREHOLE LOCATION (Lat/Long or North/East and Datum)	HOLE ID
RP	11-20-14	11-20-14		A-14-001
DRILLING CONTRACTOR			BOREHOLE LOCATION (Offset, Station, Line)	SURFACE ELEVATION
Cascade			46.50' Lt Sta 26+64 Bear Valley Rd. CL	2994.0 ft
DRILLING METHOD			DRILL RIG	BOREHOLE DIAMETER
Hollow-Stem Auger			CME 75 Track	8 in
SAMPLER TYPE(S) AND SIZE(S) (ID)			SPT HAMMER TYPE	HAMMER EFFICIENCY, ERi
Bulk, Std Cal (2.5")			Automatic 140 lb 30" drop	68%
BOREHOLE BACKFILL AND COMPLETION			GROUNDWATER READINGS DURING DRILLING AFTER DRILLING (DATE)	TOTAL DEPTH OF BORING
Soil Cuttings			No Groundwater Encountered	50.5 ft

ELEVATION (ft)	DEPTH (ft)	DESCRIPTION	Sample Location	Sample Number	Blows per 6 in.	Blows per foot	Recovery (%)	RQD (%)	Moisture Content (%)	Dry Unit Weight (pcf)	Shear Strength (tsf)	Drilling Method	Casing Depth	Remarks
	0	Well-graded SAND with SILT (SW-SM); medium dense; brown; dry to moist; trace fine GRAVEL [FILL].												
	1													
2992.00	2													
	3													
2990.00	4	SILTY SAND (SM); medium dense; reddish brown; moist; trace coarse GRAVEL; mostly fine to medium with trace coarse SAND [FILL].			13 16 16	32	100		5.4	107.2				
	5			5			100							PA
2988.00	6													
	7			Bulk										
2986.00	8													
	9	NO RECOVERY.			19 28 28	56	100							
2984.00	10													
	11													
2982.00	12													
	13													
2980.00	14	Mostly fine to medium SAND; decrease in SILT content.			10 14 17	31	100		4.1	98.2				
	15			15										DS, C
2978.00	16													
	17													
2976.00	18													
	19	Loose; trace fine GRAVEL; mostly medium SAND.			8 12 14	26	100		5.1	110.4				
2974.00	20			20										
	21													
2972.00	22													
	23													
2970.00	24	Medium dense; little fine GRAVEL; decrease in SILT content.				30	100		4.0	109.0				
	25													

(continued)

GEOCON WEST, INC.
Geocon West, Inc.
3303 North San Fernando Blvd, Suite 100
Burbank CA 91504
Telephone: 818-841-8388
Fax: 818-841-1704

PROJECT OR BRIDGE NAME
Bear Valley Road overhead at BNSF Railroad

PROJECT NO.
A90720601

DATE

HOLE ID
A-14-001

GEOCON WEST 5BR-STANDARD A9072-06-01 BEAR VALLEY ROAD BORINGS.GPJ CALTRANS LIBRARY DEC09-UNLOCK 2.GLB 2/16/15

ELEVATION (ft)	DEPTH (ft)	Material Graphics	DESCRIPTION	Sample Location	Sample Number	Blows per 6 in.	Blows per foot	Recovery (%)	RQD (%)	Moisture Content (%)	Dry Unit Weight (pcf)	Shear Strength (tsf)	Drilling Method	Casing Depth	Remarks
	25		SILTY SAND (SM) *(continued)*.		25	10 12 18					109.0				C
2968.00	26														
	27														
2966.00	28														
	29		Increase in SILT content.			13 17 22	39	100		9.1	120.4				
2964.00	30				30										
	31														
2962.00	32														
	33														
2960.00	34					6 8 10	18	100		2.8	118.3				
	35		Loose; strong brown; mostly fine to medium SAND.		35										C
2958.00	36														
	37														
2956.00	38														
	39		Poorly graded SAND (SP); medium dense; strong brown; moist; mostly fine to medium SAND [ALLUVIUM].			10 18 18	36	100		4.3	117.4				
2954.00	40				40										
	41														
2952.00	42														
	43														
2950.00	44		Dense; mottled pale brown and reddish brown.			27 50 50 for 6"		100		3.2	107.8				
	45				45										
2948.00	46														
	47														
2946.00	48														
	49					32 37 50 for 6"		100		1.3	107.9				
2944.00	50				50										
	51		Bottom of borehole at 50.5 ft bgs												
2942.00	52		Borehole terminated at planned depth.												
	53		This Boring Record was developed in accordance with the Caltrans Soil & Rock Logging, Classification, and Presentation Manual (2010) except as noted on the Soil or Rock Legend or below.												
2940.00	54														
	55														

GEOCON WEST, INC.

Geocon West, Inc.
3303 North San Fernando Blvd, Suite 100
Burbank CA 91504
Telephone: 818-841-8388
Fax: 818-841-1704

PROJECT OR BRIDGE NAME
Bear Valley Road overhead at BNSF Railroad

PROJECT NO.
A90720601

DATE

HOLE ID
A-14-001

SHEET
2 of 2

GEOCON WEST 5BR-STANDARD A9072-06-01 BEAR VALLEY ROAD BORINGS.GPJ CALTRANS LIBRARY DEC09-UNLOCK 2.GLB 2/16/15

LOGGED BY	BEGIN DATE	COMPLETION DATE	BOREHOLE LOCATION (Lat/Long or North/East and Datum)	HOLE ID
RA	11-20-14	11-20-14		A-14-002
DRILLING CONTRACTOR			BOREHOLE LOCATION (Offset, Station, Line)	SURFACE ELEVATION
Geocon			48.50' Rt Sta 22+03 Bear Valley Rd. C	2290.0 ft
DRILLING METHOD			DRILL RIG	BOREHOLE DIAMETER
Hand Auger			N/A	4 in
SAMPLER TYPE(S) AND SIZE(S) (ID)			SPT HAMMER TYPE	HAMMER EFFICIENCY, ERi
Bulk, Std Cal (2.5")			Slide Hammer	N/A
BOREHOLE BACKFILL AND COMPLETION			GROUNDWATER READINGS DURING DRILLING AFTER DRILLING (DATE)	TOTAL DEPTH OF BORING
Soil Cuttings			No Groundwater Encountered	20.5 ft

ELEVATION (ft)	DEPTH (ft)	DESCRIPTION	Sample Location	Sample Number	Blows per 6 in.	Blows per foot	Recovery (%)	RQD (%)	Moisture Content (%)	Dry Unit Weight (pcf)	Shear Strength (tsf)	Drilling Method	Casing Depth	Remarks
	0	Poorly graded SAND with SILT (SP-SM); loose; pale brown; dry; some GRAVEL; mostly fine to medium with some coarse SAND [FILL].					100							CP, EI, R
	1													
2288.00	2	Pale brown to reddish brown; moist; increase in SILT content.												
	3	Some SILT pods.												
2286.00	4													
	5	Brown to reddish brown; moist; mostly fine to medium with trace coarse SAND.		5			100		7.5	106.6				C
2284.00	6	Trace concrete fragments.												
	7													
2282.00	8	Increse in SILT pods.												
	9	Trace coarse GRAVEL.												
2280.00	10			10			100		6.0	102.6				C
	11													
2278.00	12	Decrease in SILT content.												
	13	Increase in SILT content.												
2276.00	14	Poorly graded SAND (SP); medium dense; pale brown; moist; some GRAVEL; mostly fine to medium with some coarse SAND; trace SILT [ALLUVIUM].												
	15			15			100		3.4	97.5				C
2274.00	16	Trace GRAVEL.												
	17													
2272.00	18	Some SILT.												
	19	Some GRAVEL; trace SILT.												
2270.00	20			20			100		3.9	102.1				
	21	Bottom of borehole at 20.5 ft bgs												
2268.00	22	Borehole terminated at planned depth.												
	23	This Boring Record was developed in accordance with the Caltrans Soil & Rock Logging, Classification, and Presentation Manual (2010) except as noted on the Soil or Rock Legend or below.												
2266.00	24													
	25													

GEOCON WEST, INC.

Geocon West, Inc.
3303 North San Fernando Blvd, Suite 100
Burbank CA 91504
Telephone: 818-841-8388
Fax: 818-841-1704

PROJECT OR BRIDGE NAME
Bear Valley Road overhead at BNSF Railroad

PROJECT NO.
A90720601

DATE

HOLE ID
A-14-002

SHEET
1 of 1

GEOCON WEST 5BR-STANDARD A9072-06-01 BEAR VALLEY ROAD BORINGS.GPJ CALTRANS LIBRARY DEC09-UNLOCK 2.GLB 2/16/15

LOGGED BY	BEGIN DATE	COMPLETION DATE	BOREHOLE LOCATION (Lat/Long or North/East and Datum)	HOLE ID
RP	11-20-14	11-20-14		A-14-003
DRILLING CONTRACTOR			BOREHOLE LOCATION (Offset, Station, Line)	SURFACE ELEVATION
Cascade			47.50' Lt Sta 33+03 Bear Valley Rd. C	2984.0 ft
DRILLING METHOD			DRILL RIG	BOREHOLE DIAMETER
Hollow-Stem Auger			CME 75 Track	8 in
SAMPLER TYPE(S) AND SIZE(S) (ID)			SPT HAMMER TYPE	HAMMER EFFICIENCY, ERi
Bulk, Std Cal (2.5")			Automatic 140 lb 30" drop	68%
BOREHOLE BACKFILL AND COMPLETION			GROUNDWATER READINGS DURING DRILLING AFTER DRILLING (DATE)	TOTAL DEPTH OF BORING
Soil Cuttings			No Groundwater Encountered	40.5 ft

ELEVATION (ft)	DEPTH (ft)	Material Graphics	DESCRIPTION	Sample Location	Sample Number	Blows per 6 in.	Blows per foot	Recovery (%)	RQD (%)	Moisture Content (%)	Dry Unit Weight (pcf)	Shear Strength (tsf)	Drilling Method	Casing Depth	Remarks
	0		SILTY SAND (SM); loose; brown; dry to moist; trace fine GRAVEL; mostly medium to coarse SAND [FILL].		Bulk			100							CP, EI, R
	1														
2982.00	2		Poorly graded SAND (SP); loose; reddish brown; moist; trace fine GRAVEL; mostly fine to medium with trace coarse SAND; trace SILT [FILL].			10	26	100		3.8	103.6				
	3				3	13 13									DS
2980.00	4														
	5					11	27	100		4.4	108.3				
2978.00	6				6	13 14									C
	7														
2976.00	8		Medium dense; mostly fine to medium SAND; no SILT.			15	43	100		8.2	120.0				
	9				9	16 27									
2974.00	10														
	11		Loose; reddish brown; trace fine GRAVEL; mostly fine SAND; trace SILT.			9	21	100		7.1	109.5				
2972.00	12				12	10 11									C
	13														
2970.00	14														
	15		SILTY SAND (SM); medium dense; white; moist; trace fine GRAVEL; low plasticity fines; mostly medium SAND [FILL].			8	23	100 100		11.3	116.3				PI, PA
2968.00	16				16	11 12						PP = > 4.5			
	17				Bulk										
2966.00	18														
	19		Poorly graded SAND (SP); medium dense; reddish brown; moist; mostly fine to medium with trace coarse SAND [FILL].			14	41	100		6.2	122.7				
2964.00	20				20	24 17									C
	21														
2962.00	22														
	23														
2960.00	24		Poorly graded SAND (SP); loose; mottled reddish brown and olive brown; mostly fine to medium with trace coarse				18	100		6.5	115.7				
	25														

(continued)

GEOCON WEST, INC.
Geocon West, Inc.
3303 North San Fernando Blvd, Suite 100
Burbank CA 91504
Telephone: 818-841-8388
Fax: 818-841-1704

PROJECT OR BRIDGE NAME
Bear Valley Road overhead at BNSF Railroad

PROJECT NO.
A90720601

DATE

HOLE ID
A-14-003

GEOCON WEST 5BR-STANDARD A9072-06-01 BEAR VALLEY ROAD BORINGS.GPJ CALTRANS LIBRARY DEC09-UNLOCK 2.GLB 2/16/15

ELEVATION (ft)	DEPTH (ft)	Material Graphics	DESCRIPTION	Sample Location	Sample Number	Blows per 6 in.	Blows per foot	Recovery (%)	RQD (%)	Moisture Content (%)	Dry Unit Weight (pcf)	Shear Strength (tsf)	Drilling Method	Casing Depth	Remarks
	25		SAND [ALLUVIUM].		25	9					115.7				
2958.00	26		Poorly graded SAND (SP) *(continued)*.			8 10									
	27														
2956.00	28														
	29		Reddish brown; mostly fine with some medium SAND.			9 8	17	100		5.6	115.2				
2954.00	30				30	9									
	31														
2952.00	32														
	33														
2950.00	34		Medium dense; pale brown; mostly fine SAND.			13 19	55	100		3.8	102.0				
	35				35	36									
2948.00	36														
	37														
2946.00	38														
	39					50 for 4"		17		2.0	98.4				
2944.00	40		Dense.		40										
	41		Bottom of borehole at 40.5 ft bgs												
2942.00	42		Borehole terminated at planned depth.												
	43		This Boring Record was developed in accordance with the Caltrans Soil & Rock Logging, Classification, and Presentation Manual (2010) except as noted on the Soil or Rock Legend or below.												
2940.00	44														
	45														
2938.00	46														
	47														
2936.00	48														
	49														
2934.00	50														
	51														
2932.00	52														
	53														
2930.00	54														
	55														

GEOCON WEST 5BR-STANDARD A9072-06-01 BEAR VALLEY ROAD BORINGS.GPJ CALTRANS LIBRARY DEC09-UNLOCK 2.GLB 2/16/15

GEOCON WEST, INC.

Geocon West, Inc.
3303 North San Fernando Blvd, Suite 100
Burbank CA 91504
Telephone: 818-841-8388
Fax: 818-841-1704

PROJECT OR BRIDGE NAME
Bear Valley Road overhead at BNSF Railroad

PROJECT NO.
A90720601

DATE

HOLE ID
A-14-003

SHEET
2 of 2

LOGGED BY	BEGIN DATE	COMPLETION DATE	BOREHOLE LOCATION (Lat/Long or North/East and Datum)	HOLE ID
RP	11-20-14	11-20-14		A-14-004
DRILLING CONTRACTOR			BOREHOLE LOCATION (Offset, Station, Line)	SURFACE ELEVATION
Cascade			62.50' Rt Sta 35+24 Bear Valley Rd. C	2978.0 ft
DRILLING METHOD			DRILL RIG	BOREHOLE DIAMETER
Hollow-Stem Auger			CME 75 Track	8 in
SAMPLER TYPE(S) AND SIZE(S) (ID)			SPT HAMMER TYPE	HAMMER EFFICIENCY, ERi
Bulk, Std Cal (2.5")			Automatic 140 lb 30" drop	68%
BOREHOLE BACKFILL AND COMPLETION			GROUNDWATER READINGS DURING DRILLING AFTER DRILLING (DATE)	TOTAL DEPTH OF BORING
Soil Cuttings			No Groundwater Encountered	35.5 ft

ELEVATION (ft)	DEPTH (ft)	DESCRIPTION	Sample Location	Sample Number	Blows per 6 in.	Blows per foot	Recovery (%)	RQD (%)	Moisture Content (%)	Dry Unit Weight (pcf)	Shear Strength (tsf)	Drilling Method	Casing Depth	Remarks
	0	AGGREGATE BASE.		Bulk			100							
	1	SILTY SAND (SM); loose; brown; dry to moist; trace fine GRAVEL; mostly fine with some medium to coarse SAND [FILL].												
2976.00	2													
	3	Poorly graded SAND (SP); loose; reddish brown; moist; mostly fine with some coarse SAND [FILL].			10 11 14	25	100 100		3.6	108.9				
2974.00	4			4										
	5			Bulk										
2972.00	6	Trace fine GRAVEL.			10 11 16	27	100		4.6	107.1				
	7			7										
2970.00	8													
	9	Medium dense.			11 17 14	31	100		6.1	112.6				
2968.00	10			10										
	11													
2966.00	12													
	13													
2964.00	14	SILTY SAND (SM); loose; brown to olive brown; mostly fine to medium SAND [FILL].			7 7 9	16	100		4.6	115.1				
	15			15										
2962.00	16													
	17													
2960.00	18													
	19				4 5 10	15	100		4.8	109.4				
2958.00	20			20										
	21													
2956.00	22													
	23													
2954.00	24	Poorly graded SAND (SP); loose; reddish brown; moist; trace fine GRAVEL; mostly fine with some medium and				22	100		5.7	106.4				
	25													

(continued)

GEOCON WEST, INC.
Geocon West, Inc.
3303 North San Fernando Blvd, Suite 100
Burbank CA 91504
Telephone: 818-841-8388
Fax: 818-841-1704

PROJECT OR BRIDGE NAME
Bear Valley Road overhead at BNSF Railroad

PROJECT NO.
A90720601

DATE

HOLE ID
A-14-004

GEOCON WEST 5BR-STANDARD A9072-06-01 BEAR VALLEY ROAD BORINGS.GPJ CALTRANS LIBRARY DEC09-UNLOCK 2.GLB 2/16/15

ELEVATION (ft)	DEPTH (ft)	Material Graphics	DESCRIPTION	Sample Location	Sample Number	Blows per 6 in.	Blows per foot	Recovery (%)	RQD (%)	Moisture Content (%)	Dry Unit Weight (pcf)	Shear Strength (tsf)	Drilling Method	Casing Depth	Remarks
	25		trace coarse SAND [ALLUVIUM]. Poorly graded SAND (SP) *(continued)*.		25	6 8 14					106.4				
2952.00	26														
	27														
2950.00	28														
	29		Medium dense; reddish brown to pale brown; trace fine GRAVEL; mostly fine to medium SAND; trace SILT.			15 20 28	48	100		4.4	104.7				
2948.00	30				30										
	31														
2946.00	32														
	33														
2944.00	34					17 21 28	49	100		0.9	103.8				
	35				35										
2942.00	36		Bottom of borehole at 35.5 ft bgs												
	37		Borehole terminated at planned depth.												
2940.00	38		This Boring Record was developed in accordance with the Caltrans Soil & Rock Logging, Classification, and Presentation Manual (2010) except as noted on the Soil or Rock Legend or below.												
	39														
2938.00	40														
	41														
2936.00	42														
	43														
2934.00	44														
	45														
2932.00	46														
	47														
2930.00	48														
	49														
2928.00	50														
	51														
2926.00	52														
	53														
2924.00	54														
	55														

GEOCON WEST 5BR-STANDARD A9072-06-01 BEAR VALLEY ROAD BORINGS.GPJ CALTRANS LIBRARY DEC09-UNLOCK 2.GLB 2/16/15

GEOCON WEST, INC.

Geocon West, Inc.
3303 North San Fernando Blvd, Suite 100
Burbank CA 91504
Telephone: 818-841-8388
Fax: 818-841-1704

PROJECT OR BRIDGE NAME
Bear Valley Road overhead at BNSF Railroad

PROJECT NO.
A90720601

DATE

HOLE ID
A-14-004

SHEET
2 of 2

LOGGED BY	BEGIN DATE	COMPLETION DATE	BOREHOLE LOCATION (Lat/Long or North/East and Datum)	HOLE ID
RP	11-19-14	11-19-14		A-14-005
DRILLING CONTRACTOR			BOREHOLE LOCATION (Offset, Station, Line)	SURFACE ELEVATION
Cascade			69.50' Rt Sta 29+38 Bear Valley Rd. C	2964.0 ft
DRILLING METHOD			DRILL RIG	BOREHOLE DIAMETER
Hollow-Stem Auger			CME 75	8 in
SAMPLER TYPE(S) AND SIZE(S) (ID)			SPT HAMMER TYPE	HAMMER EFFICIENCY, ERi
Bulk, Std Cal (2.5")			Automatic 140 lb 30" drop	60% (Assumed)
BOREHOLE BACKFILL AND COMPLETION			GROUNDWATER READINGS DURING DRILLING AFTER DRILLING (DATE)	TOTAL DEPTH OF BORING
Soil Cuttings			No Groundwater Encountered	50.5 ft

ELEVATION (ft)	DEPTH (ft)	DESCRIPTION	Sample Location	Sample Number	Blows per 6 in.	Blows per foot	Recovery (%)	RQD (%)	Moisture Content (%)	Dry Unit Weight (pcf)	Shear Strength (tsf)	Drilling Method	Casing Depth	Remarks
	0	SILTY SAND (SM); loose to medium dense; reddish brown; dry to moist; trace fine GRAVEL; mostly fine to medium with trace coarse SAND [FILL].		Bulk			100							
2962.00	2			3	7 7 5	12	100		13.3	103.6				
	3	Medium dense.												EI, CR
2960.00	4													
	5	SANDY SILT (ML); very stiff; variegated olive brown and reddish brown; moist; trace fine GRAVEL; some fine and trace coarse SAND [FILL].		6	3 3 6	9	100		17.8	94.1	PP = 3.6			DS, C
2958.00	6													
	7													
2956.00	8	SANDY SILT (ML); very stiff; chaotic pale olive brown and olive brown; moist; some fine SAND; medium plasticity fines; trace oxidation [ALLUVIUM].		9	7 16 28	44	100 100		26.3	95.7	PP = > 4.5			PA DS, C
	9													
2954.00	10			Bulk										
	11			12	7 9 14	23	100		23.8	97.4	PP = 4.0			C
2952.00	12													
	13													
2950.00	14	Poorly graded SAND (SP); dense; pale reddish brown; moist; mostly fine to medium with little coarse SAND; trace SILT.		15	12 17 26	43	100		10.1	114.8				
2948.00	16													
	17	Well-graded SAND (SW); medium dense; pale brown; moist; trace fine GRAVEL.		18	9 11 17	28	100		3.6	102.8				
2946.00	18													
	19													
2944.00	20			21	12 17 23	40	100		0.8	104.0				
	21	Dense.												
2942.00	22													
	23													
2940.00	24	Very dense.				65	100		1.7	105.0				
	25													

(continued)

Geocon West, Inc.
3303 North San Fernando Blvd, Suite 100
Burbank CA 91504
Telephone: 818-841-8388
Fax: 818-841-1704

PROJECT OR BRIDGE NAME
Bear Valley Road overhead at BNSF Railroad

PROJECT NO.
A90720601

DATE

HOLE ID
A-14-005

GEOCON WEST 5BR-STANDARD A9072-06-01 BEAR VALLEY ROAD BORINGS.GPJ CALTRANS LIBRARY DEC09-UNLOCK 2.GLB 2/16/15

ELEVATION (ft)	DEPTH (ft)	Material Graphics	DESCRIPTION	Sample Location	Sample Number	Blows per 6 in.	Blows per foot	Recovery (%)	RQD (%)	Moisture Content (%)	Dry Unit Weight (pcf)	Shear Strength (tsf)	Drilling Method	Casing Depth	Remarks
	25		Well-graded SAND (SW) *(continued)*.		25	12 29 36					105.0				PA
2938.00	26														
	27														
2936.00	28														
	29					15 36 40	76	100		2.6	112.7				
2934.00	30				30										
	31														
2932.00	32														
	33														
2930.00	34		SANDY SILT (ML); very stiff; olive brown; moist; trace coarse to fine GRAVEL; some medium to fine SAND; nonplastic fines [ALLUVIUM].			33 50 for 3"		100		10.8	98.8				
	35				35							PP = 2.7			CP, PI
2928.00	36														
	37														
2926.00	38														
	39		SILTY SAND (SM); very dense; brown; moist; mostly fine to medium with trace coarse SAND.			13 50 for 6"		100		12.2	116.7				
2924.00	40				40										
	41														
2922.00	42														
	43														
2920.00	44					11 22 44	66	100		14.8	109.5				
	45		Increase in SILT content.		45										
2918.00	46														
	47														
2916.00	48														
	49					8 11 19	30	100		27.3	93.6				
2914.00	50		SANDY SILT (ML); very stiff; brown to reddish brown; low plasticity fines.		50							PP = 3.7			
	51		Bottom of borehole at 50.5 ft bgs												
2912.00	52		Borehole terminated at planned depth.												
	53		This Boring Record was developed in accordance with the Caltrans Soil & Rock Logging, Classification, and Presentation Manual (2010) except as noted on the Soil or Rock Legend or below.												
2910.00	54														
	55														

GEOCON WEST, INC.

Geocon West, Inc.
3303 North San Fernando Blvd, Suite 100
Burbank CA 91504
Telephone: 818-841-8388
Fax: 818-841-1704

PROJECT OR BRIDGE NAME
Bear Valley Road overhead at BNSF Railroad

PROJECT NO.
A90720601

DATE

HOLE ID
A-14-005

SHEET
2 of 2

GEOCON WEST 5BR-STANDARD A9072-06-01 BEAR VALLEY ROAD BORINGS.GPJ CALTRANS LIBRARY DEC09-UNLOCK 2.GLB 2/16/15

LOGGED BY	BEGIN DATE	COMPLETION DATE	BOREHOLE LOCATION (Lat/Long or North/East and Datum)	HOLE ID
RP	11-19-14	11-19-14		A-14-006
DRILLING CONTRACTOR			BOREHOLE LOCATION (Offset, Station, Line)	SURFACE ELEVATION
Cascade			74.50' Lt Sta 29+24 Bear Valley Rd. C	2962.0 ft
DRILLING METHOD			DRILL RIG	BOREHOLE DIAMETER
Hollow-Stem Auger			CME 75	8 in
SAMPLER TYPE(S) AND SIZE(S) (ID)			SPT HAMMER TYPE	HAMMER EFFICIENCY, ERi
Bulk, Std Cal (2.5"), SPT (1.4")			Automatic 140 lb 30" drop	60% (Assumed)
BOREHOLE BACKFILL AND COMPLETION			GROUNDWATER READINGS DURING DRILLING AFTER DRILLING (DATE)	TOTAL DEPTH OF BORING
Soil Cuttings			No Groundwater Encountered	50.5 ft

ELEVATION (ft)	DEPTH (ft)	DESCRIPTION	Sample Location	Sample Number	Blows per 6 in.	Blows per foot	Recovery (%)	RQD (%)	Moisture Content (%)	Dry Unit Weight (pcf)	Shear Strength (tsf)	Drilling Method	Casing Depth	Remarks
	0	SILTY SAND (SM); loose; olive brown to reddish brown; moist; trace fine GRAVEL; mostly fine to medium SAND [FILL].		Bulk			100							CP, CR
2960.00	2	Medium dense; brown; trace carbon deposit staining.		2.5	13 11 11	22	100		7.4	114.0				
2958.00	4				2 3 3	6	100		6.1					
	5	Loose.		5										
2956.00	6													
	7	Some carbon deposits.		7.5	3 3 4	7	100		8.0	107.6				DS, C
2954.00	8													
	9	Poorly graded SAND (SP); loose; strong brown; moist; trace fine GRAVEL; mostly fine with some medium SAND [ALLUVIUM].		10	2 3 3	6	100		5.9					
2952.00	10													
2950.00	12	Medium dense; reddish brown.		12.5	10 11 15	26	100		11.2	111.8				
2948.00	14	Trace coarse SAND.		15	7 9 10	19	100		2.9					
2946.00	16													
	17	Well-graded SAND (SW); dense; very pale brown; moist; trace fine GRAVEL [ALLUVIUM].		17.5	10 15 24	39	100		2.7	106.6				
2944.00	18													
	19	Lean CLAY (CL); very stiff; olive brown; moist; low plasticity fines [ALLUVIUM].		20	15 13 11	24	100		9.3					PI
	21													
2940.00	22	Poorly graded SAND (SP); very dense; very pale brown; moist; trace fine GRAVEL; mostly medium with some coarse and little fine SAND [ALLUVIUM].		22.5	19 26 36	62	100		4.3	108.2				
2938.00	24	Pale brown; mostly fine to medium SAND.					100		1.1					
	25													

(continued)

GEOCON WEST, INC.
Geocon West, Inc.
3303 North San Fernando Blvd, Suite 100
Burbank CA 91504
Telephone: 818-841-8388
Fax: 818-841-1704

PROJECT OR BRIDGE NAME
Bear Valley Road overhead at BNSF Railroad

PROJECT NO.
A90720601

DATE

HOLE ID
A-14-006

GEOCON WEST 5BR-STANDARD A9072-06-01 BEAR VALLEY ROAD BORINGS.GPJ CALTRANS LIBRARY DEC09-UNLOCK 2.GLB 2/16/15

ELEVATION (ft)	DEPTH (ft)	DESCRIPTION	Sample Location	Sample Number	Blows per 6 in.	Blows per foot	Recovery (%)	RQD (%)	Moisture Content (%)	Dry Unit Weight (pcf)	Shear Strength (tsf)	Drilling Method	Casing Depth	Remarks
	25	Poorly graded SAND (SP) *(continued)*.		25	16 40 50 for 4"									
2936.00	26													
	27			27.5	14 25 32	57	100		2.4	107.2				
2934.00	28													
	29	Varigated olive brown, pale brown and reddish brown; mostly fine with little coarse SAND.		30	21 44 46	90	100		1.9					
2932.00	30													
	31													
2930.00	32			32.5	9 27 40	67	100		1.5	111.0				
	33													
2928.00	34													
	35	Pink to reddish brown; mostly fine to medium SAND. SANDY SILT (ML); hard; olive brown; moist; fine SAND; trace oxidation [ALLUVIUM].		35	18 16 15	31	100		12.2					PI
2926.00	36													
	37			37.5	10 18 50 for 5"		100		19.1	109.0	PP = > 4.5			
2924.00	38	SANDY lean CLAY (CL); hard; mottled grayish brown and brown; moist; medium SAND; medium plasticity fines [ALLUVIUM].												
	39	Poorly graded SAND (SP); very dense; olive brown; moist; fine with some medium SAND [ALLUVIUM].		40	11 22 30	52	100		5.4					
2922.00	40													
	41													
2920.00	42	SILTY SAND (SM); very dense; olive brown; moist; mostly fine SAND; trace carbon deposits [ALLUVIUM].		42.5	18 33 36	69	100		6.5	113.0				
	43													
2918.00	44													
	45	Poorly graded SAND with SILT (SP-SM); medium dense; olive brown; moist; mostly fine SAND [ALLUVIUM].		45	8 11 17	28	100		6.8					
2916.00	46													
	47	SILTY SAND (SM); dense; olive brown; moist; mostly fine SAND [ALLUVIUM].		47.5	13 21 26	47	100		14.2	100.7				
2914.00	48	Poorly graded SAND (SP); dense; olive brown; moist; mostly fine SAND [ALLUVIUM].												
	49													
2912.00	50	Lean CLAY (CL); stiff; brown; moist; low plasticity fines [ALLUVIUM].		50	4 6 8	14	100		23.1					
	51	Bottom of borehole at 50.5 ft bgs												
2910.00	52	Borehole terminated at planned depth.												
	53	This Boring Record was developed in accordance with the Caltrans Soil & Rock Logging, Classification, and Presentation Manual (2010) except as noted on the Soil or Rock Legend or below.												
2908.00	54													
	55													

GEOCON WEST, INC.

Geocon West, Inc.
3303 North San Fernando Blvd, Suite 100
Burbank CA 91504
Telephone: 818-841-8388
Fax: 818-841-1704

PROJECT OR BRIDGE NAME
Bear Valley Road overhead at BNSF Railroad

PROJECT NO.
A90720601

DATE

HOLE ID
A-14-006

SHEET
2 of 2

GEOCON WEST 5BR-STANDARD A9072-06-01 BEAR VALLEY ROAD BORINGS.GPJ CALTRANS LIBRARY DEC09-UNLOCK 2.GLB 2/16/15

LOGGED BY	BEGIN DATE	COMPLETION DATE	BOREHOLE LOCATION (Lat/Long or North/East and Datum)	HOLE ID
RP	11-18-14	11-18-14		A-14-007
DRILLING CONTRACTOR			BOREHOLE LOCATION (Offset, Station, Line)	SURFACE ELEVATION
Cascade			70.00' Rt Sta 29+92 Bear Valley Rd. C	2964.0 ft
DRILLING METHOD			DRILL RIG	BOREHOLE DIAMETER
Hollow-Stem Auger			CME 75	8 in
SAMPLER TYPE(S) AND SIZE(S) (ID)			SPT HAMMER TYPE	HAMMER EFFICIENCY, ERi
Bulk, Std Cal (2.5"), SPT (1.4")			Automatic 140 lb 30" drop	60% (Assumed)
BOREHOLE BACKFILL AND COMPLETION			GROUNDWATER READINGS DURING DRILLING AFTER DRILLING (DATE)	TOTAL DEPTH OF BORING
Soil Cuttings			No Groundwater Encountered	50.5 ft

ELEVATION (ft)	DEPTH (ft)	DESCRIPTION	Sample Location	Sample Number	Blows per 6 in.	Blows per foot	Recovery (%)	RQD (%)	Moisture Content (%)	Dry Unit Weight (pcf)	Shear Strength (tsf)	Drilling Method	Casing Depth	Remarks
	0	SILTY SAND (SM); loose to medium dense; brown; moist; trace fine GRAVEL; mostly fine to medium with some coarse SAND [FILL].		Bulk			100							PA
2962.00	2			2.5	6 5 5	10	100		6.3					
	3	Well-graded SAND (SW); loose; brown; moist [FILL].												
2960.00	4				4 4 4	8	100		4.2	100.4				
	5	Dark olive brown.		5										DS
2958.00	6													
	7			7.5	3 2 3	5	100		14.6					
2956.00	8													
	9	SANDY lean CLAY (CL); hard; grayish brown and brown; moist; little fine SAND; low plasticity fines [ALLUVIUM].			9 14 17	31	100		14.7	109.6				
2954.00	10			10							PP = >4.5			DS, C
	11													
2952.00	12	Lean CLAY (CL); stiff; mottled olive brown and reddish brown; moist; trace oxidation staining [ALLUVIUM].		12.5	4 6 9	15	100		20.5					PI
	13													
2950.00	14	Poorly graded SAND (SP); very dense; mottled reddish brown, yellowish brown, and pale brown; moist; trace fine GRAVEL; mostly fine with trace coarse SAND [ALLUVIUM].			14 27 26	53	100		5.2	118.5				
	15			15										C
2948.00	16													
	17			17.5	11 14 14	28	100		4.5					
2946.00	18	Poorly graded SAND (SP); very loose; pale brown; moist; fine to medium grained SAND [ALLUVIUM].												
	19				22 31 25	56	100		1.8	112.3				
2944.00	20			20										C
	21													
2942.00	22			22.5	16 16 14	30	100		2.6					
	23													
2940.00	24	Trace fine GRAVEL; mostly medium with some fine and coarse SAND.				58	100		1.5	114.5				
	25													

(continued)

GEOCON WEST, INC.
Geocon West, Inc.
3303 North San Fernando Blvd, Suite 100
Burbank CA 91504
Telephone: 818-841-8388
Fax: 818-841-1704

PROJECT OR BRIDGE NAME
Bear Valley Road overhead at BNSF Railroad

PROJECT NO.
A90720601

DATE

HOLE ID
A-14-007

GEOCON WEST 5BR-STANDARD A9072-06-01 BEAR VALLEY ROAD BORINGS.GPJ CALTRANS LIBRARY DEC09-UNLOCK 2.GLB 2/16/15

ELEVATION (ft)	DEPTH (ft)	Material Graphics	DESCRIPTION	Sample Location	Sample Number	Blows per 6 in.	Blows per foot	Recovery (%)	RQD (%)	Moisture Content (%)	Dry Unit Weight (pcf)	Shear Strength (tsf)	Drilling Method	Casing Depth	Remarks
	25		Poorly graded SAND (SP) *(continued)*.		25	24					114.5				C
2938.00	26					26 32									
	27		Mostly fine SAND.		27.5	17 23 28	51	100		2.0					
2936.00	28														
	29					23 38	80	100		1.2	112.9				
2934.00	30		Trace coarse GRAVEL.		30	42									C
	31														
2932.00	32														
	33				32.5										
2930.00	34					30 36	89	100		1.7	113.7				
	35		Mostly medium to coarse with some fine SAND.		35	53									
2928.00	36														
	37				37.5	60 for 6"		100		2.0					
2926.00	38														
	39		SILTY SAND (SM); very dense; olive brown; moist; mostly fine with some medium SAND.			41 60		100		8.9	101.0				
2924.00	40				40										
	41														
2922.00	42				42.5	21 32 21	53	100		6.8					
	43		Poorly graded SAND (SP); very dense; pale brown; moist; fine to medium SAND.												
2920.00	44		SANDY SILT (ML); very stiff to hard; yellowish brown; moist; low plasticity fines; fine SAND.			12 20	44	100		13.4	100.9				
	45				45	24						PP = 3.8			
2918.00	46														
	47				47.5	11 15 17	32	100		20.9					
2916.00	48		Olive brown.												
	49		SILTY SAND (SM); very dense; reddish brown; moist; fine SAND; trace carbon deposits.			13 3		100		10.4	120.9				
2914.00	50				50	50 for 4"									
	51		Bottom of borehole at 50.5 ft bgs												
			Borehole terminated at planned depth.												
2912.00	52		This Boring Record was developed in accordance with the Caltrans Soil & Rock Logging, Classification, and Presentation Manual (2010) except as noted on the Soil or Rock Legend or below.												
	53														
2910.00	54														
	55														

GEOCON WEST, INC.

Geocon West, Inc.
3303 North San Fernando Blvd, Suite 100
Burbank CA 91504
Telephone: 818-841-8388
Fax: 818-841-1704

PROJECT OR BRIDGE NAME
Bear Valley Road overhead at BNSF Railroad

PROJECT NO.
A90720601

DATE

HOLE ID
A-14-007

SHEET
2 of 2

GEOCON WEST 5BR-STANDARD A9072-06-01 BEAR VALLEY ROAD BORINGS.GPJ CALTRANS LIBRARY DEC09-UNLOCK 2.GLB 2/16/15

LOGGED BY	BEGIN DATE	COMPLETION DATE	BOREHOLE LOCATION (Lat/Long or North/East and Datum)	HOLE ID
RP	11-18-14	11-19-14		A-14-008
DRILLING CONTRACTOR			BOREHOLE LOCATION (Offset, Station, Line)	SURFACE ELEVATION
Cascade			74.50' Lt Sta 29+78 Bear Valley Rd. C	2961.0 ft
DRILLING METHOD			DRILL RIG	BOREHOLE DIAMETER
Hollow-Stem Auger			CME 75	8 in
SAMPLER TYPE(S) AND SIZE(S) (ID)			SPT HAMMER TYPE	HAMMER EFFICIENCY, ERi
Bulk, Std Cal (2.5")			Automatic 140 lb 30" drop	60% (Assumed)
BOREHOLE BACKFILL AND COMPLETION			GROUNDWATER READINGS DURING DRILLING AFTER DRILLING (DATE)	TOTAL DEPTH OF BORING
Soil Cuttings			No Groundwater Encountered	50.5 ft

ELEVATION (ft)	DEPTH (ft)	DESCRIPTION	Sample Location	Sample Number	Blows per 6 in.	Blows per foot	Recovery (%)	RQD (%)	Moisture Content (%)	Dry Unit Weight (pcf)	Shear Strength (tsf)	Drilling Method	Casing Depth	Remarks
	0	SILTY SAND (SM); loose; brown; dry to moist; trace fine GRAVEL; mostly fine to medium with trace coarse SAND [FILL].												
2959.00	2													
	3				3 4 4	8	100		4.4	109.3				
2957.00	4	Mostly fine with little coarse and trace medium SAND.		4										C
	5			Bulk			100							PA
2955.00	6	Well-graded SAND (SW); loose; reddish brown; moist; little fine GRAVEL [ALLUVIUM].			3 3 3	6	100		12.0	107.5				
	7			7										C
2953.00	8													
	9	Poorly graded SAND (SP); loose; reddish brown; moist; mostly fine to medium with little coarse SAND [ALLUVIUM].			2 3 3	6	100		4.4	105.9				
2951.00	10			10										C
	11													
2949.00	12	Medium dense; trace coarse GRAVEL.			8 10 12	22	100		5.0	110.6				
	13			13										
2947.00	14													
	15				6 10 14	24	100		3.7	101.0				
2945.00	16	Trace fine GRAVEL.		16										C
	17													
2943.00	18				14 11 5	16	100		2.2	104.1				
	19	Trace coarse GRAVEL.		19							PP = 2.0			C
2941.00	20	Lean CLAY (CL); stiff to very stiff; olive brown; moist; slightly oxidized [ALLUVIUM].												
	21													
2939.00	22													
	23													
2937.00	24	Well-graded SAND (SW); very dense; pale brown; moist; trace coarse GRAVEL; trace SILT [ALLUVIUM].				57	100		2.5	109.6				
	25													

(continued)

GEOCON WEST, INC.
Geocon West, Inc.
3303 North San Fernando Blvd, Suite 100
Burbank CA 91504
Telephone: 818-841-8388
Fax: 818-841-1704

PROJECT OR BRIDGE NAME
Bear Valley Road overhead at BNSF Railroad

PROJECT NO.
A90720601

DATE

HOLE ID
A-14-008

GEOCON WEST 5BR-STANDARD A9072-06-01 BEAR VALLEY ROAD BORINGS.GPJ CALTRANS LIBRARY DEC09-UNLOCK 2.GLB 2/16/15

ELEVATION (ft)	DEPTH (ft)	DESCRIPTION	Sample Location	Sample Number	Blows per 6 in.	Blows per foot	Recovery (%)	RQD (%)	Moisture Content (%)	Dry Unit Weight (pcf)	Shear Strength (tsf)	Drilling Method	Casing Depth	Remarks
	25	Well-graded SAND (SW) *(continued)*.		25	8 27 30					109.6				C
2935.00	26													
	27													
2933.00	28													
	29	Poorly graded SAND (SP); very dense; pale brown; moist; mostly fine to medium with some coarse SAND [ALLUVIUM].			20 30 37	67	100		3.0	109.7				
2931.00	30			30										
	31													
2929.00	32													
	33													
2927.00	34	Poorly graded SAND (SP); dense; mottled olive brown and reddish brown; moist; mostly fine with trace coarse SAND; trace SILT [ALLUVIUM].			21 18 31	49	100		21.9	102.7				
	35			35										
2925.00	36	Reddish brown; increase in SILT content.												
	37													
2923.00	38													
	39				11 21 38	59	100		8.7	118.8				
2921.00	40	Very dense; mottled pale brown, reddish brown, and olive brown; mostly fine with some medium and trace coarse SAND.												
	41													
2919.00	42													
	43													
2917.00	44	SANDY SILT (ML); hard; dark yellowish brown; moist; fine SAND; nonplastic to low plasticity fines [ALLUVIUM].			10 27 32	59	100		13.6	110.4				
	45			45							PP = >4.5			
2915.00	46													
	47													
2913.00	48													
	49				7 20 31	51	100		17.1	107.8				
2911.00	50	Low plasticity fines; trace variegated carbon deposits.		50							PP = >4.5			
	51	Bottom of borehole at 50.5 ft bgs Borehole terminated at planned depth. This Boring Record was developed in accordance with the Caltrans Soil & Rock Logging, Classification, and Presentation Manual (2010) except as noted on the Soil or Rock Legend or below.												
2909.00	52													
	53													
2907.00	54													
	55													

GEOCON WEST 5BR-STANDARD A9072-06-01 BEAR VALLEY ROAD BORINGS.GPJ CALTRANS LIBRARY DEC09-UNLOCK 2.GLB 2/16/15

GEOCON WEST, INC.

Geocon West, Inc.
3303 North San Fernando Blvd, Suite 100
Burbank CA 91504
Telephone: 818-841-8388
Fax: 818-841-1704

PROJECT OR BRIDGE NAME
Bear Valley Road overhead at BNSF Railroad

PROJECT NO.
A90720601

DATE

HOLE ID
A-14-008

SHEET
2 of 2

APPENDIX B

APPENDIX B

LABORATORY TESTING

Laboratory tests were performed in accordance with California Test Methods or generally accepted test methods of the American Society for Testing and Materials (ASTM). The types of tests performed are listed below:

- In-Place Dry Density and Moisture Content: ASTM D2937 (CTM 226)
- Direct Shear Strength: ASTM D 3080
- Consolidation: ASTM D 2435
- Atterberg Limits: ASTM D 4318
- Grain Size Distribution: ASTM D 422
- Compaction Curve: D 1557
- R-value: CTM 301
- pH and Resistivity: CTM 643
- Sulfate Content: CTM 417
- Chloride Content: CTM 422

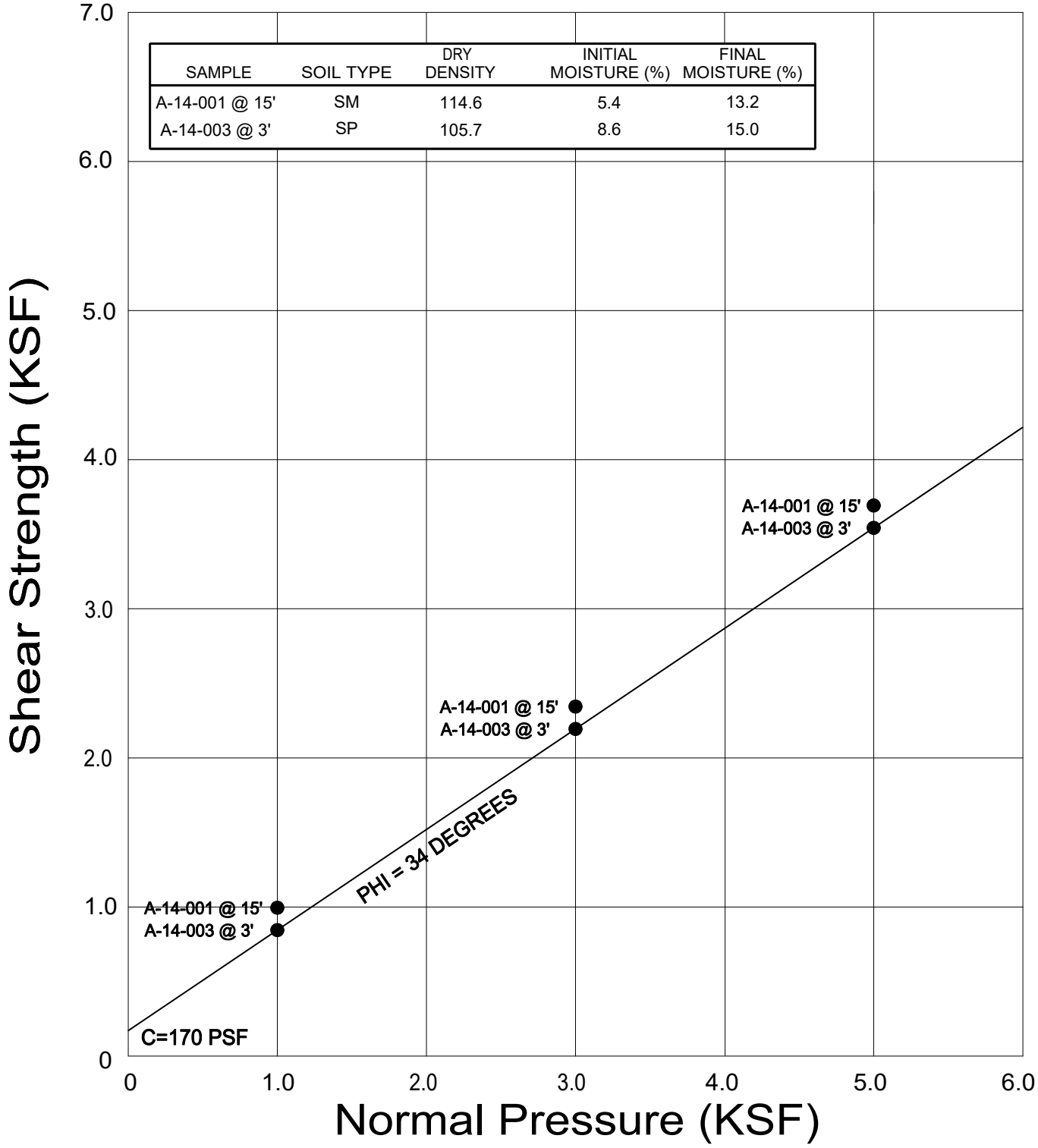

SAMPLE	SOIL TYPE	DRY DENSITY	INITIAL MOISTURE (%)	FINAL MOISTURE (%)
A-14-001 @ 15'	SM	114.6	5.4	13.2
A-14-003 @ 3'	SP	105.7	8.6	15.0

● Direct Shear, Saturated

GEOCON WEST, INC.
ENVIRONMENTAL GEOTECHNICAL MATERIALS
3303 N. SAN FERNANDO BLVD. - SUITE 100 - BURBANK, CA 91504
PHONE (818) 841-8388 - FAX (818) 841-1704

DIRECT SHEAR TEST RESULTS

BEAR VALLEY ROAD OVERHEAD
AT BNSF RAILROAD
CITYOF VICTORVILLE, CALIFORNIA

Drafted by: JTA	Checked by: NDB	FEB 2017	PROJECT NO. A9072-06-01	FIG. B1

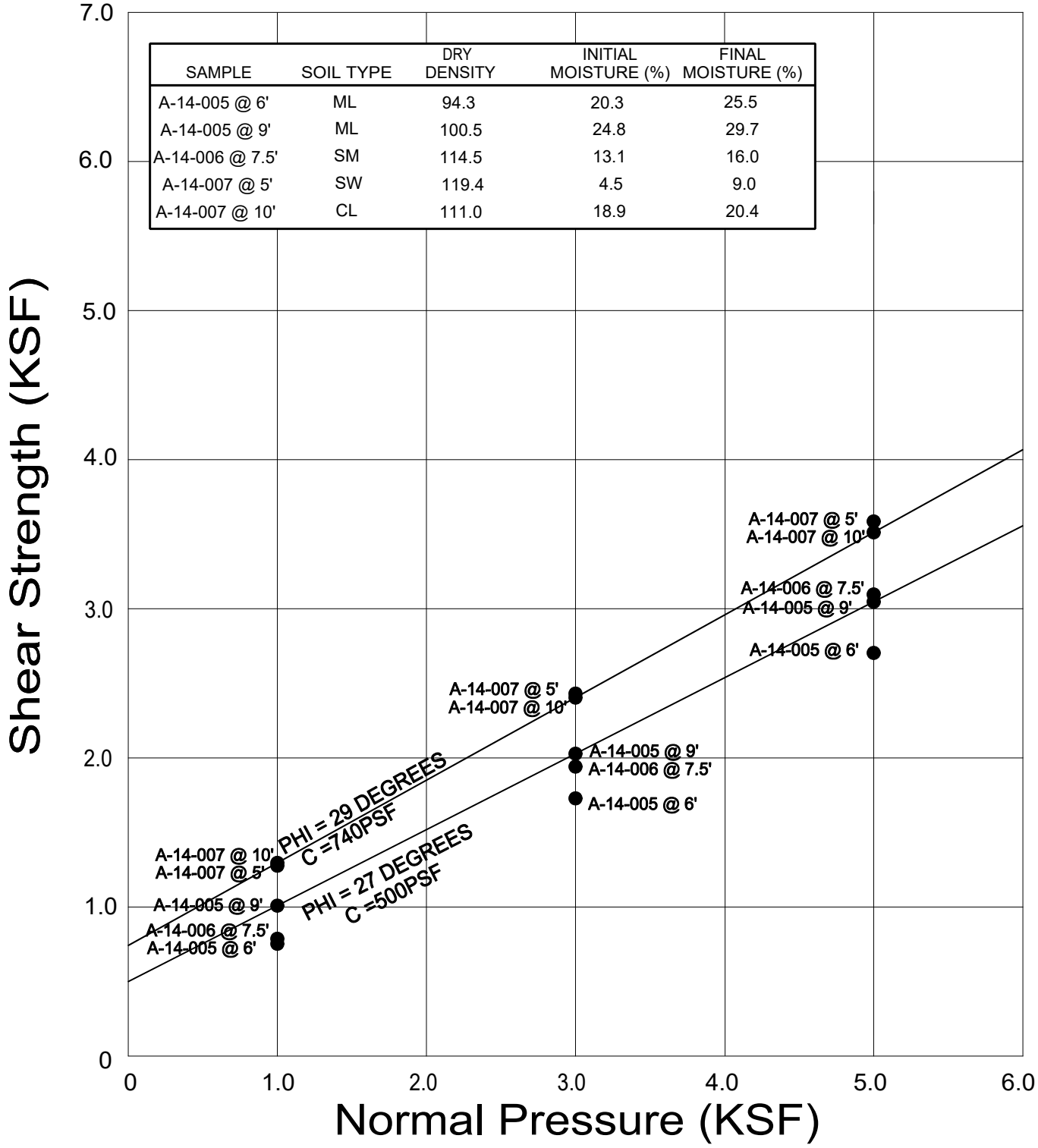

SAMPLE	SOIL TYPE	DRY DENSITY	INITIAL MOISTURE (%)	FINAL MOISTURE (%)
A-14-005 @ 6'	ML	94.3	20.3	25.5
A-14-005 @ 9'	ML	100.5	24.8	29.7
A-14-006 @ 7.5'	SM	114.5	13.1	16.0
A-14-007 @ 5'	SW	119.4	4.5	9.0
A-14-007 @ 10'	CL	111.0	18.9	20.4

GEOCON WEST, INC.
ENVIRONMENTAL GEOTECHNICAL MATERIALS
3303 N. SAN FERNANDO BLVD. - SUITE 100 - BURBANK, CA 91504
PHONE (818) 841-8388 - FAX (818) 841-1704

DIRECT SHEAR TEST RESULTS

BEAR VALLEY ROAD OVERHEAD
AT BNSF RAILROAD
CITYOF VICTORVILLE, CALIFORNIA

Drafted by: JTA	Checked by: NDB	FEB 2017	PROJECT NO. A9072-06-01	FIG. B2

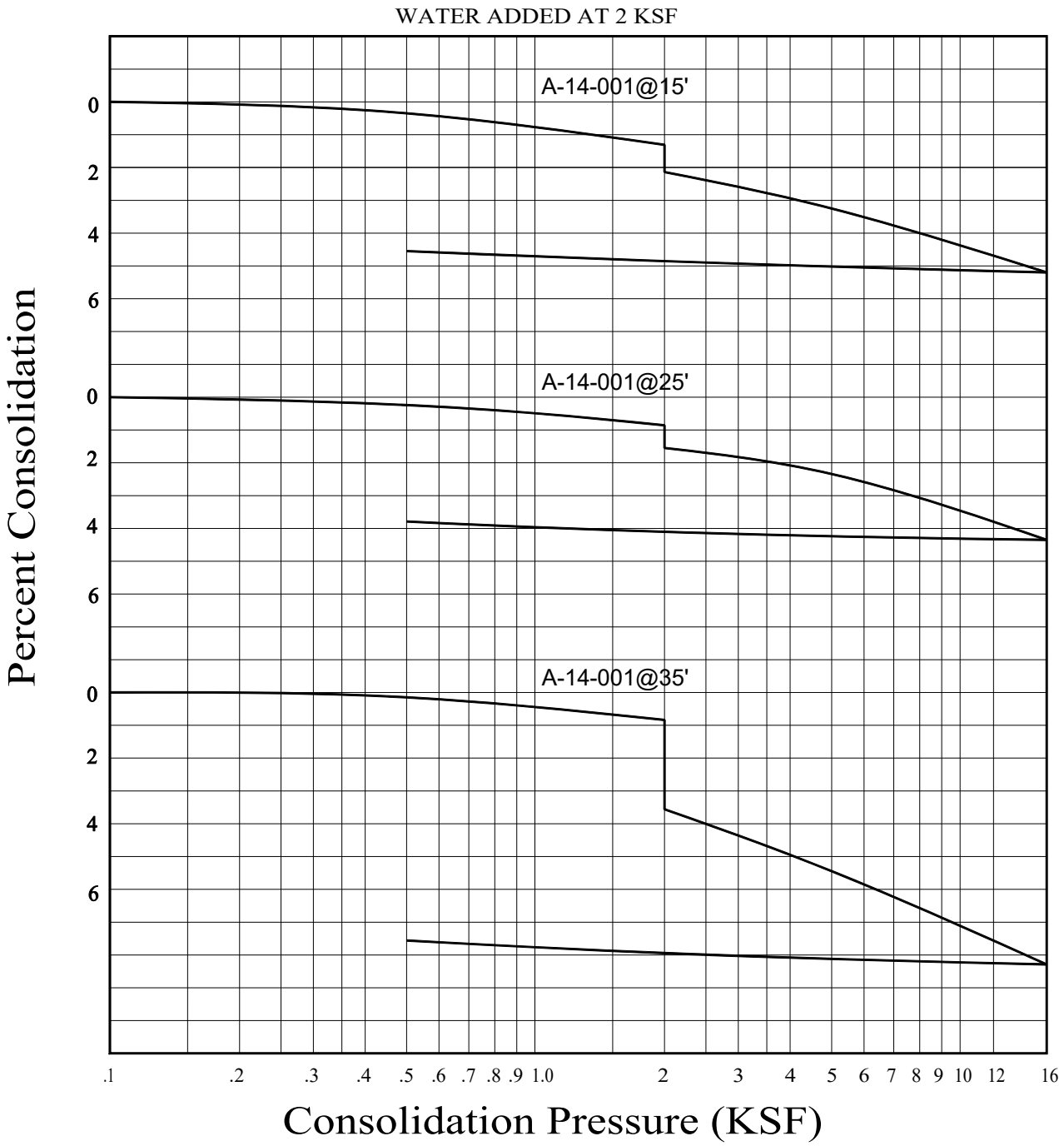

GEOCON
WEST, INC.

ENVIRONMENTAL GEOTECHNICAL MATERIALS
3303 N. SAN FERNANDO BLVD. - SUITE 100 - BURBANK, CA 91504
PHONE (818) 841-8388 - FAX (818) 841-1704

CONSOLIDATION TEST RESULTS

BEAR VALLEY ROAD OVERHEAD
AT BNSF RAILROAD
CITYOF VICTORVILLE, CALIFORNIA

Drafted by: JTA	Checked by: NDB	FEB 2017	PROJECT NO. A9072-06-01	FIG. B3

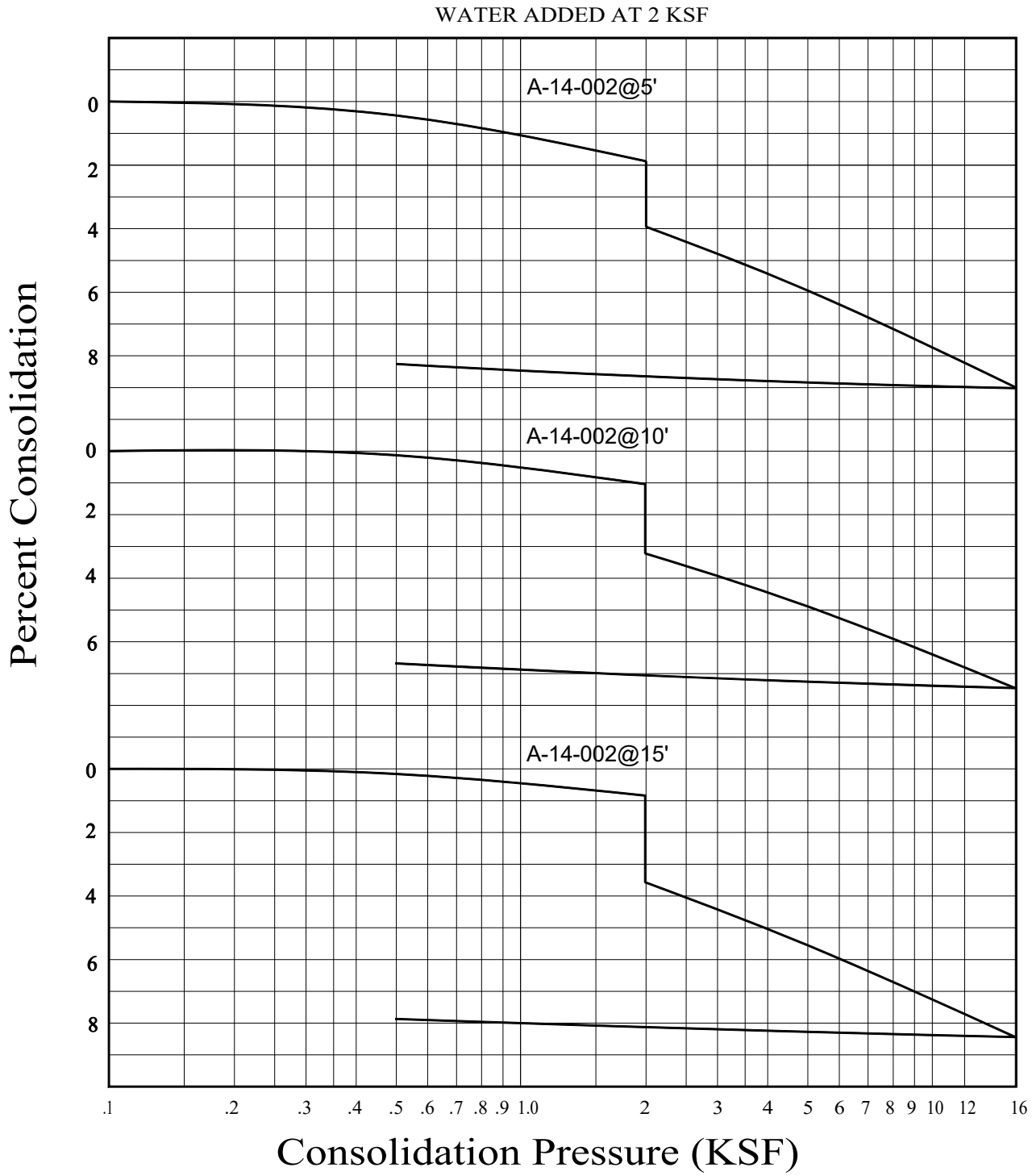

GEOCON
WEST, INC.

ENVIRONMENTAL GEOTECHNICAL MATERIALS
3303 N. SAN FERNANDO BLVD. - SUITE 100 - BURBANK, CA 91504
PHONE (818) 841-8388 - FAX (818) 841-1704

CONSOLIDATION TEST RESULTS

BEAR VALLEY ROAD OVERHEAD
AT BNSF RAILROAD
CITYOF VICTORVILLE, CALIFORNIA

Drafted by: JTA	Checked by: NDB	FEB 2017	PROJECT NO. A9072-06-01	FIG. B4

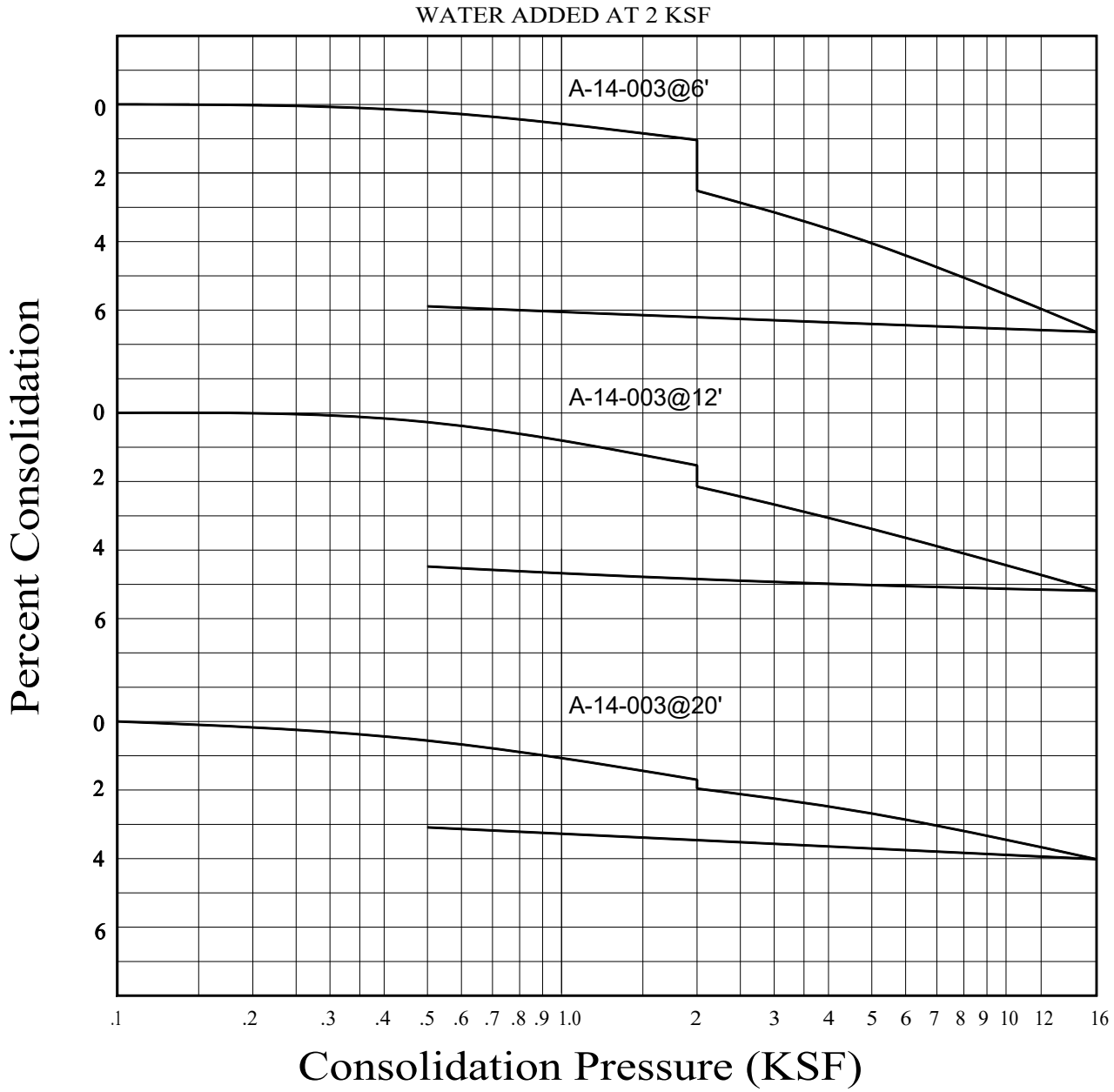

GEOCON
WEST, INC.

ENVIRONMENTAL GEOTECHNICAL MATERIALS
3303 N. SAN FERNANDO BLVD. - SUITE 100 - BURBANK, CA 91504
PHONE (818) 841-8388 - FAX (818) 841-1704

CONSOLIDATION TEST RESULTS

BEAR VALLEY ROAD OVERHEAD
AT BNSF RAILROAD
CITYOF VICTORVILLE, CALIFORNIA

Drafted by: JTA	Checked by: NDB	FEB 2017	PROJECT NO. A9072-06-01	FIG. B5

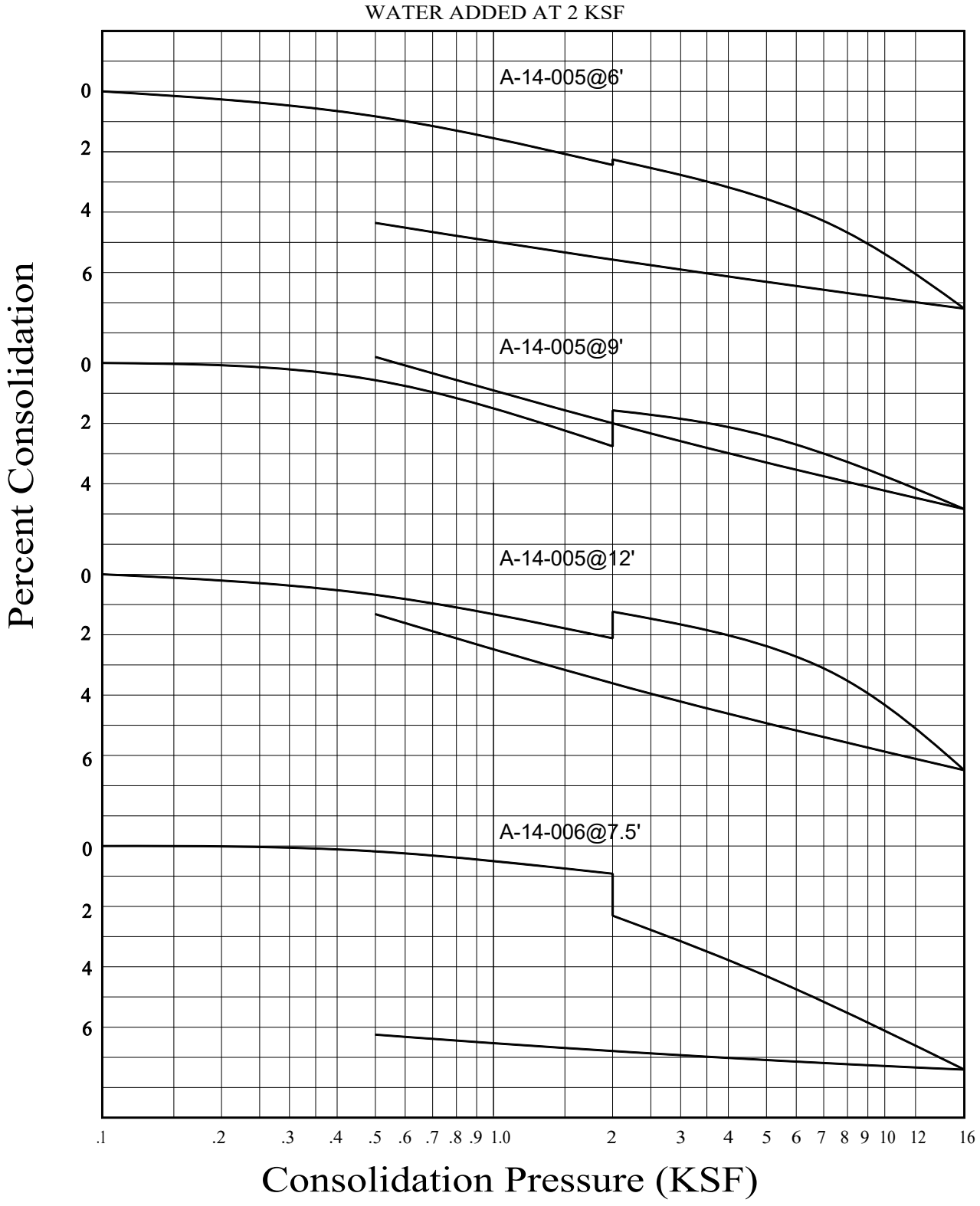

GEOCON
WEST, INC.

ENVIRONMENTAL GEOTECHNICAL MATERIALS
3303 N. SAN FERNANDO BLVD. - SUITE 100 - BURBANK, CA 91504
PHONE (818) 841-8388 - FAX (818) 841-1704

CONSOLIDATION TEST RESULTS

BEAR VALLEY ROAD OVERHEAD
AT BNSF RAILROAD
CITYOF VICTORVILLE, CALIFORNIA

Drafted by: JTA	Checked by: NDB	FEB 2017	PROJECT NO. A9072-06-01	FIG. B6

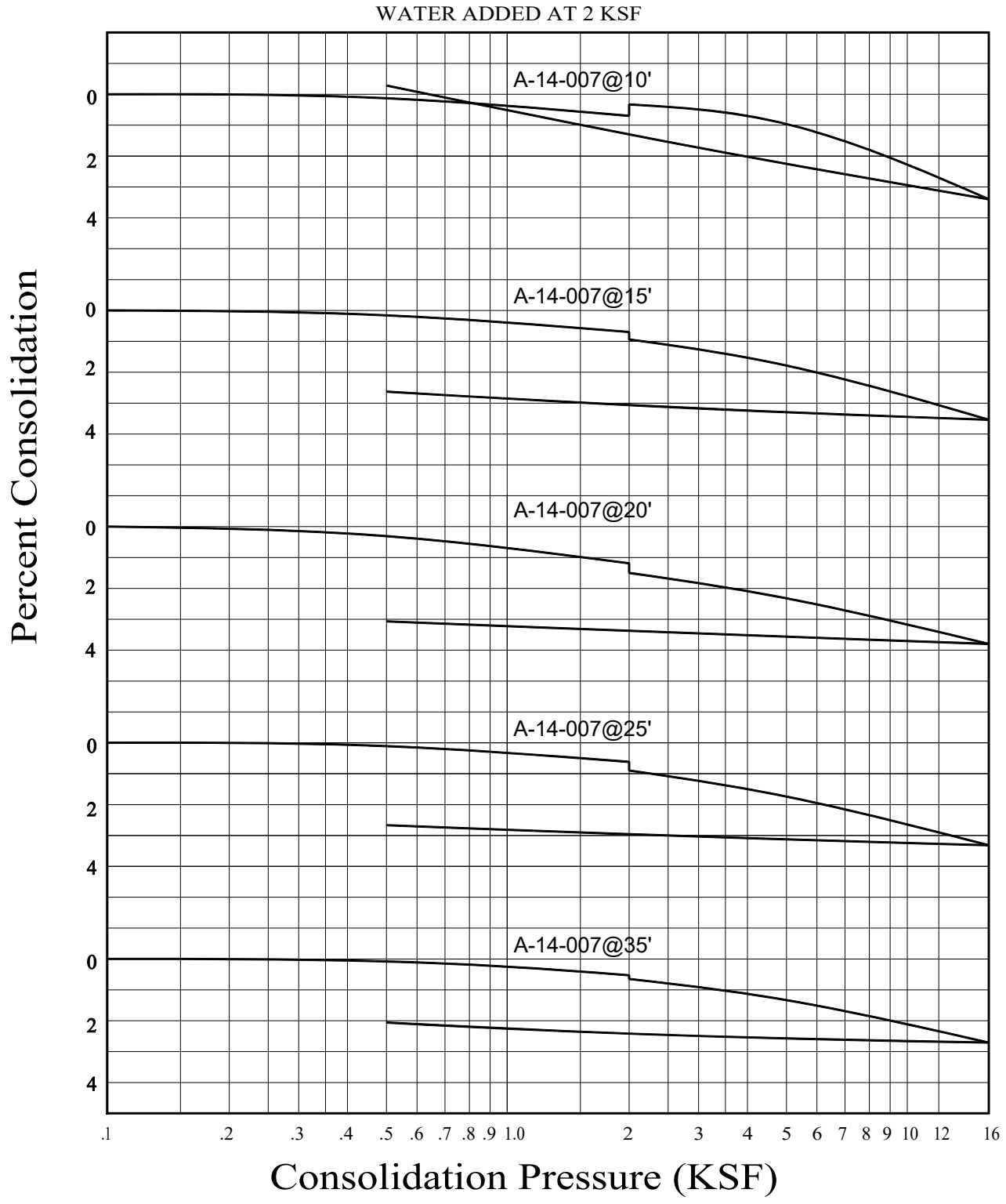

GEOCON
WEST, INC.

ENVIRONMENTAL GEOTECHNICAL MATERIALS
3303 N. SAN FERNANDO BLVD. - SUITE 100 - BURBANK, CA 91504
PHONE (818) 841-8388 - FAX (818) 841-1704

CONSOLIDATION TEST RESULTS

BEAR VALLEY ROAD OVERHEAD
AT BNSF RAILROAD
CITYOF VICTORVILLE, CALIFORNIA

Drafted by: JTA	Checked by: NDB	FEB 2017	PROJECT NO. A9072-06-01	FIG. B7

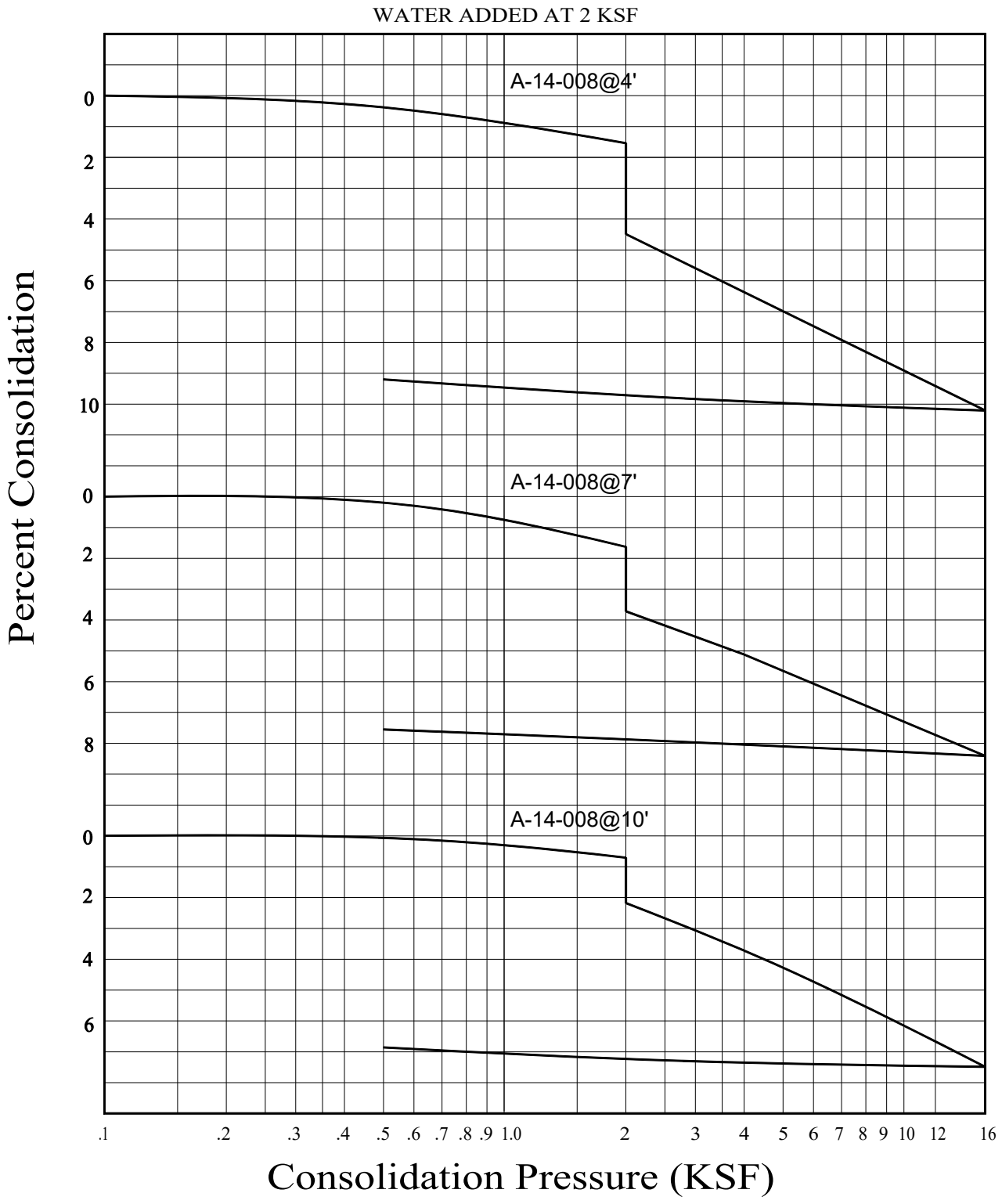

GEOCON
WEST, INC.

ENVIRONMENTAL GEOTECHNICAL MATERIALS
3303 N. SAN FERNANDO BLVD. - SUITE 100 - BURBANK, CA 91504
PHONE (818) 841-8388 - FAX (818) 841-1704

CONSOLIDATION TEST RESULTS

BEAR VALLEY ROAD OVERHEAD
AT BNSF RAILROAD
CITYOF VICTORVILLE, CALIFORNIA

Drafted by: JTA	Checked by: NDB	FEB 2017	PROJECT NO. A9072-06-01	FIG. B8

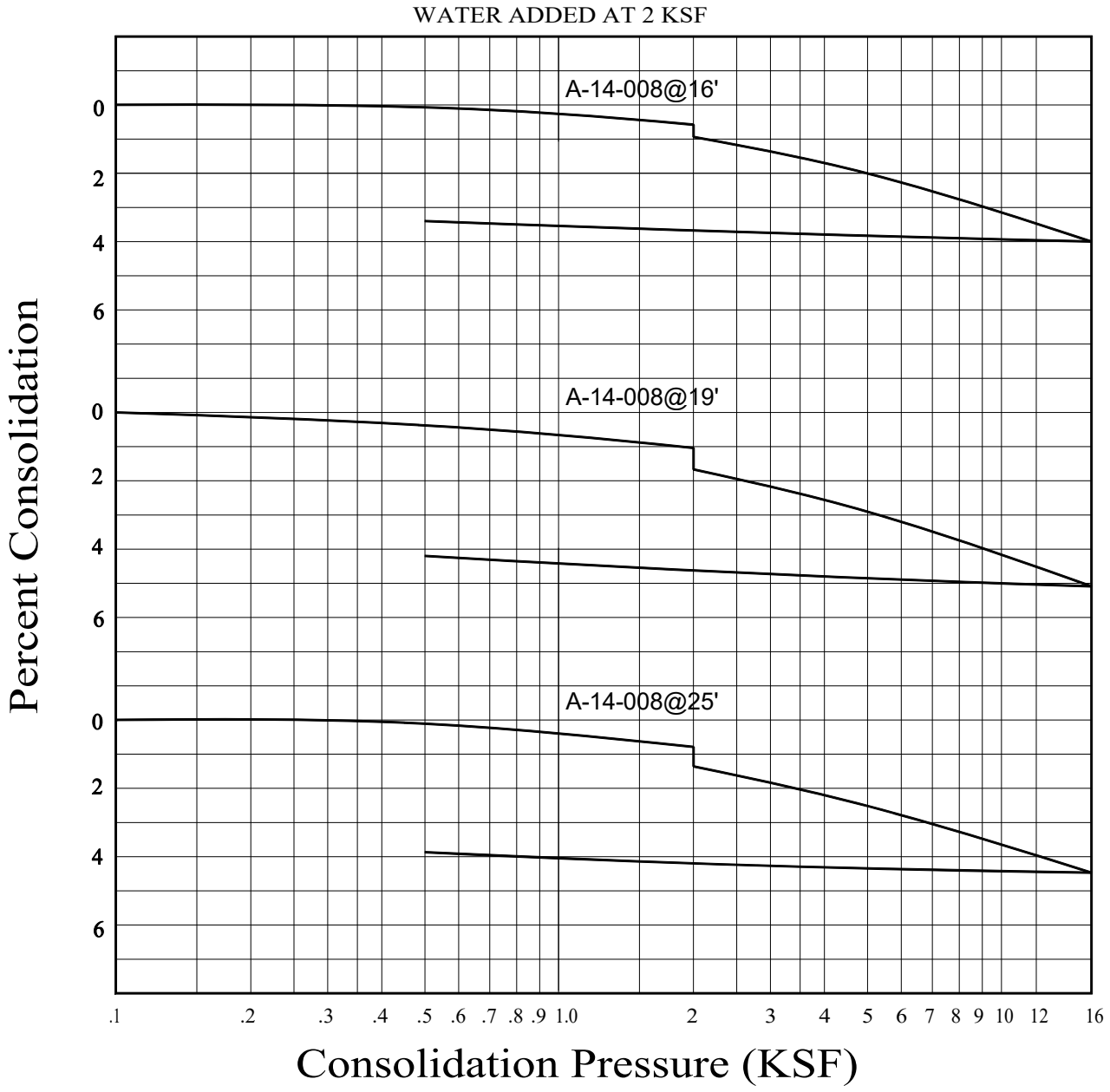

GEOCON
WEST, INC.

ENVIRONMENTAL GEOTECHNICAL MATERIALS
3303 N. SAN FERNANDO BLVD. - SUITE 100 - BURBANK, CA 91504
PHONE (818) 841-8388 - FAX (818) 841-1704

CONSOLIDATION TEST RESULTS

BEAR VALLEY ROAD OVERHEAD
AT BNSF RAILROAD
CITYOF VICTORVILLE, CALIFORNIA

Drafted by: JTA	Checked by: NDB	FEB 2017	PROJECT NO. A9072-06-01	FIG. B9

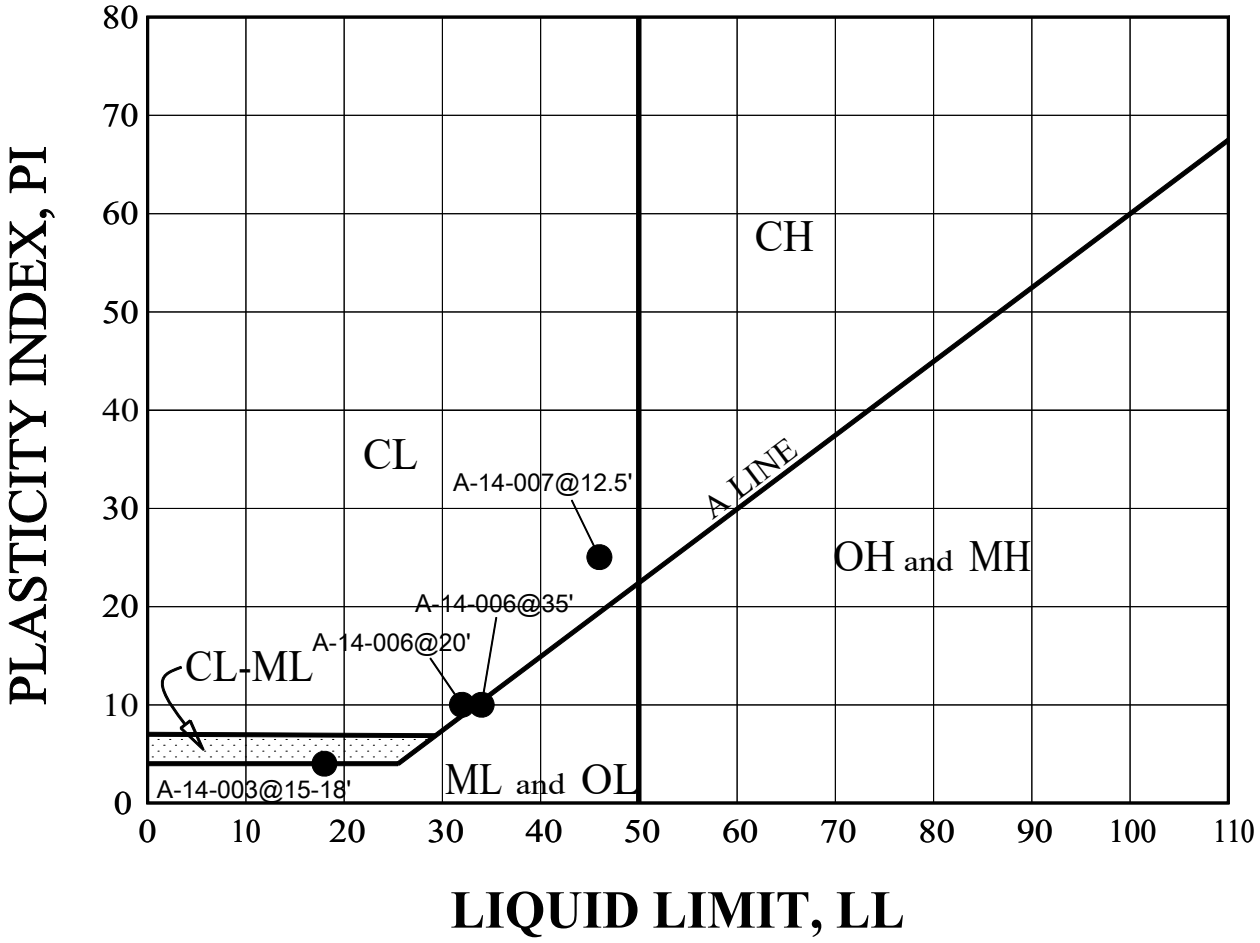

BORING NUMBER	DEPTH (FEET)	LL	PL	PI	SOIL BEHAVIOR
A-14-003	**15-18**	**18**	**14**	**4**	**CL-ML**
A-14-005	**35**	**N/P**	**N/P**	**N/P**	**- -**
A-14-006	**20**	**32**	**22**	**10**	**CL**
A-14-006	**35**	**34**	**24**	**10**	**ML**
A-14-007	**12.5**	**46**	**21**	**25**	**CL**

*N/P indicates Non-Plastic

GEOCON WEST, INC.
ENVIRONMENTAL GEOTECHNICAL MATERIALS
3303 N. SAN FERNANDO BLVD. - SUITE 100 - BURBANK, CA 91504
PHONE (818) 841-8388 - FAX (818) 841-1704

Drafted by: JTA | Checked by: NDB

ATTERBERG LIMITS

BEAR VALLEY ROAD OVERHEAD
AT BNSF RAILROAD
CITYOF VICTORVILLE, CALIFORNIA

FEB 2017 | PROJECT NO. A9072-06-01 | FIG. B10

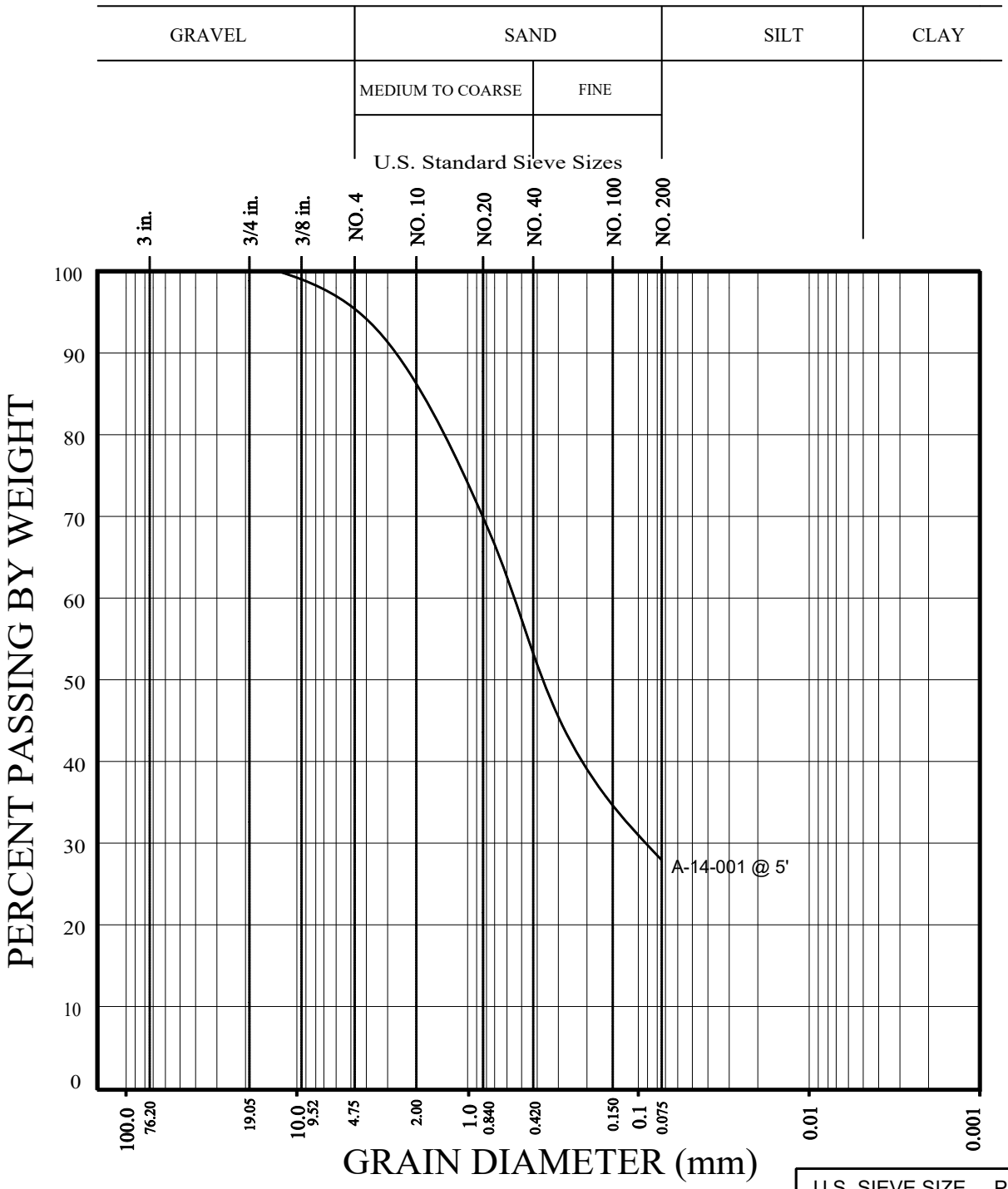

U.S. SIEVE SIZE	PERCENT
GRAVEL	5
SAND	67
FINES	28

GEOCON
WEST, INC.
ENVIRONMENTAL GEOTECHNICAL MATERIALS
3303 N. SAN FERNANDO BLVD. - SUITE 100 - BURBANK, CA 91504
PHONE (818) 841-8388 - FAX (818) 841-1704

GRAIN SIZE DISTRIBUTION

BEAR VALLEY ROAD OVERHEAD
AT BNSF RAILROAD
CITYOF VICTORVILLE, CALIFORNIA

Drafted by: JTA	Checked by: NDB	FEB 2017	PROJECT NO. A9072-06-01	FIG. B11

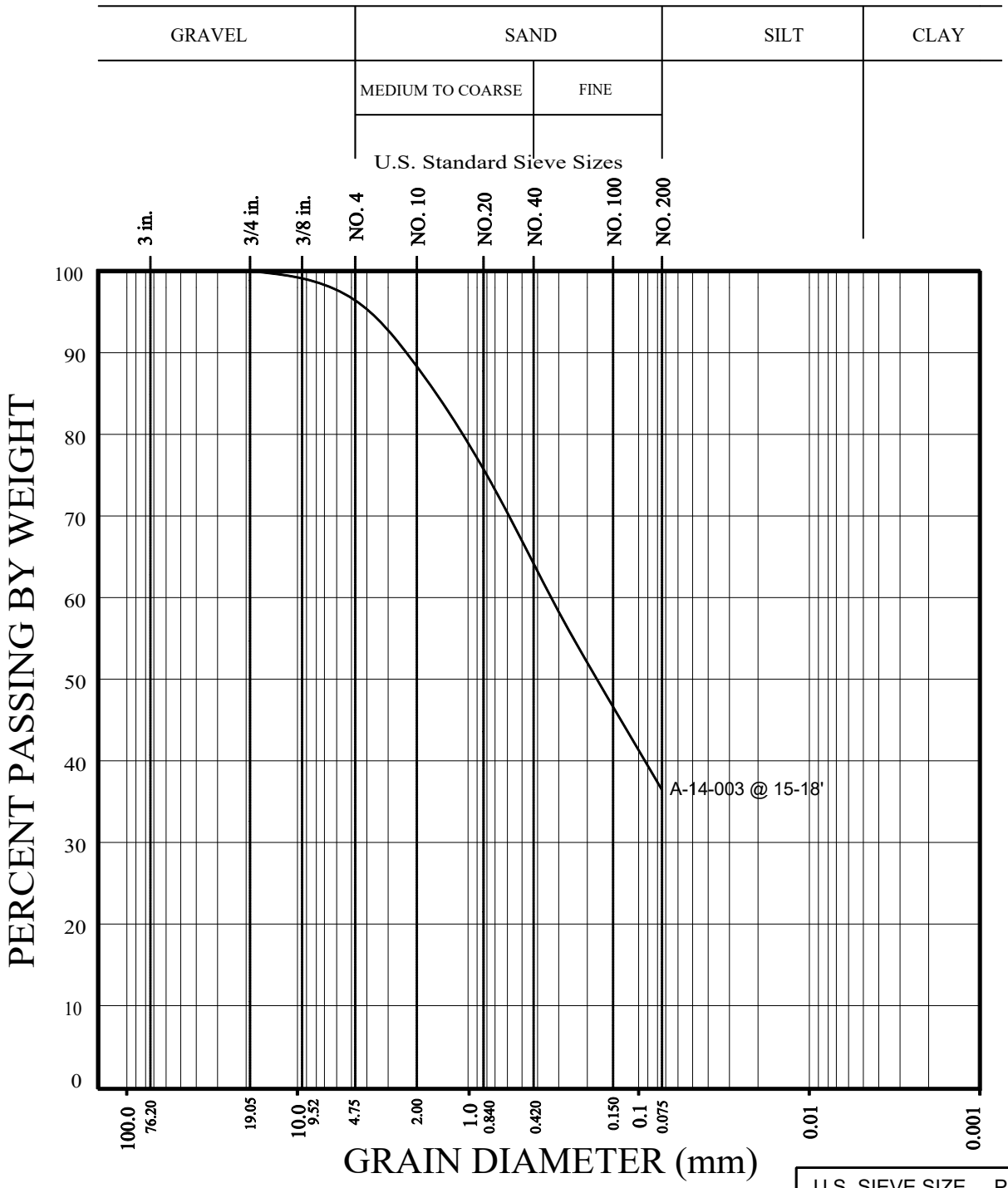

U.S. SIEVE SIZE	PERCENT
GRAVEL	4
SAND	60
FINES	36

GEOCON
WEST, INC.
ENVIRONMENTAL GEOTECHNICAL MATERIALS
3303 N. SAN FERNANDO BLVD. - SUITE 100 - BURBANK, CA 91504
PHONE (818) 841-8388 - FAX (818) 841-1704

GRAIN SIZE DISTRIBUTION

BEAR VALLEY ROAD OVERHEAD
AT BNSF RAILROAD
CITYOF VICTORVILLE, CALIFORNIA

Drafted by: JTA	Checked by: NDB	FEB 2017	PROJECT NO. A9072-06-01	FIG. B12

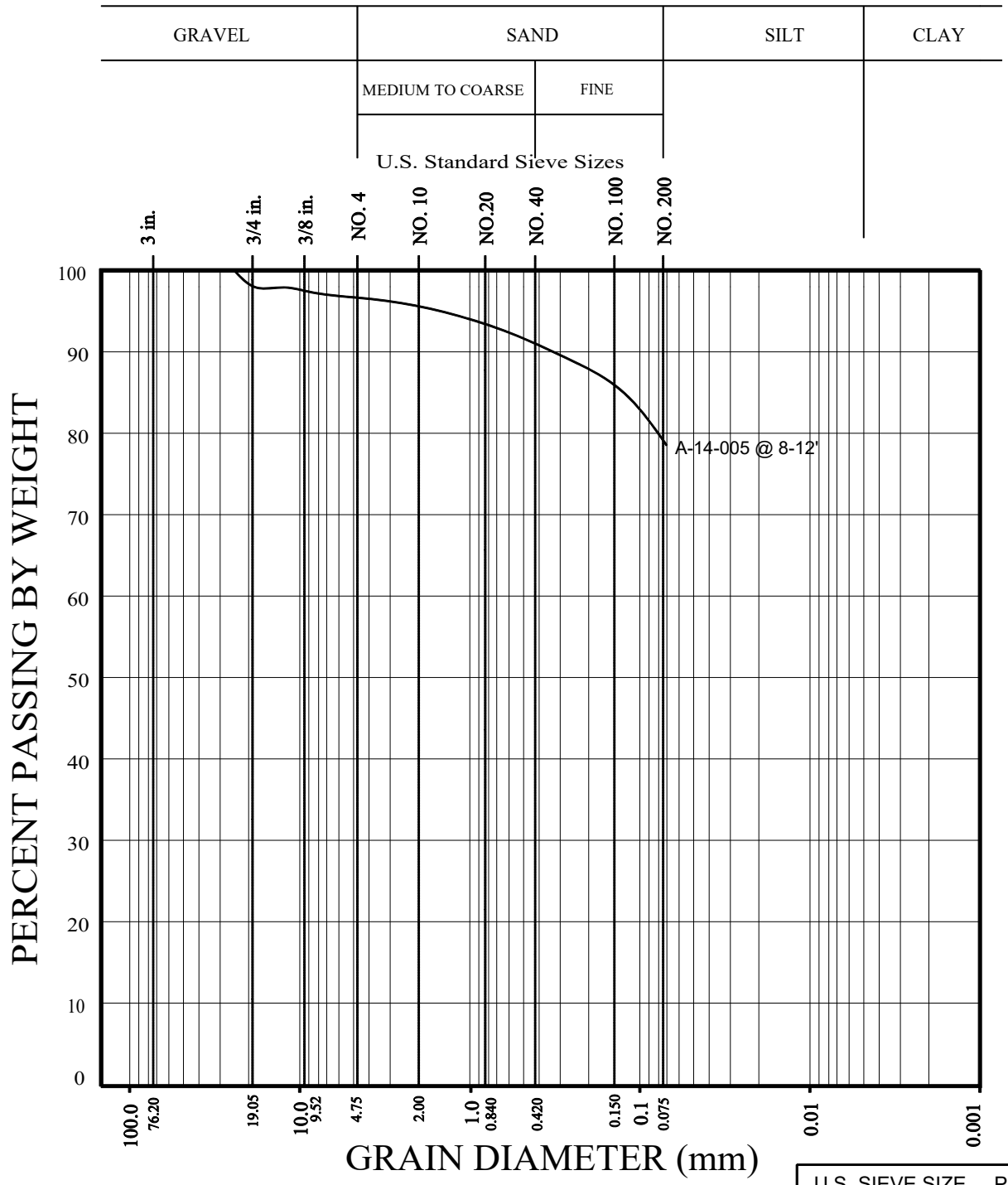

U.S. SIEVE SIZE	PERCENT
GRAVEL	3
SAND	18
FINES	79

GEOCON
WEST, INC.

ENVIRONMENTAL GEOTECHNICAL MATERIALS
3303 N. SAN FERNANDO BLVD. - SUITE 100 - BURBANK, CA 91504
PHONE (818) 841-8388 - FAX (818) 841-1704

GRAIN SIZE DISTRIBUTION

BEAR VALLEY ROAD OVERHEAD
AT BNSF RAILROAD
CITYOF VICTORVILLE, CALIFORNIA

Drafted by: JTA	Checked by: NDB	FEB 2017	PROJECT NO. A9072-06-01	FIG. B13

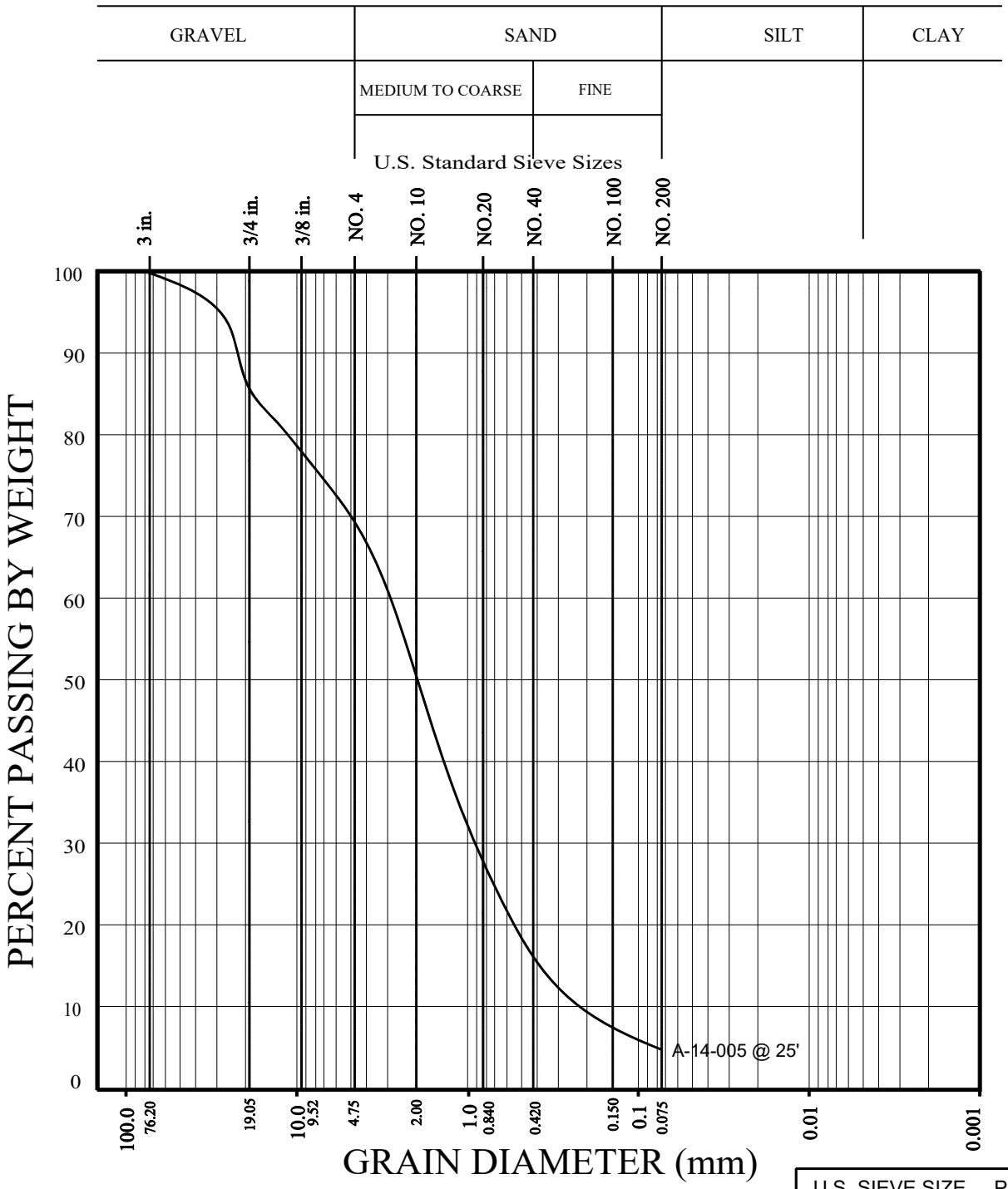

U.S. SIEVE SIZE	PERCENT
GRAVEL	31
SAND	64
FINES	5

GEOCON
WEST, INC.
ENVIRONMENTAL GEOTECHNICAL MATERIALS
3303 N. SAN FERNANDO BLVD. - SUITE 100 - BURBANK, CA 91504
PHONE (818) 841-8388 - FAX (818) 841-1704

GRAIN SIZE DISTRIBUTION

BEAR VALLEY ROAD OVERHEAD
AT BNSF RAILROAD
CITYOF VICTORVILLE, CALIFORNIA

Drafted by: JTA	Checked by: NDB	FEB 2017	PROJECT NO. A9072-06-01	FIG. B14

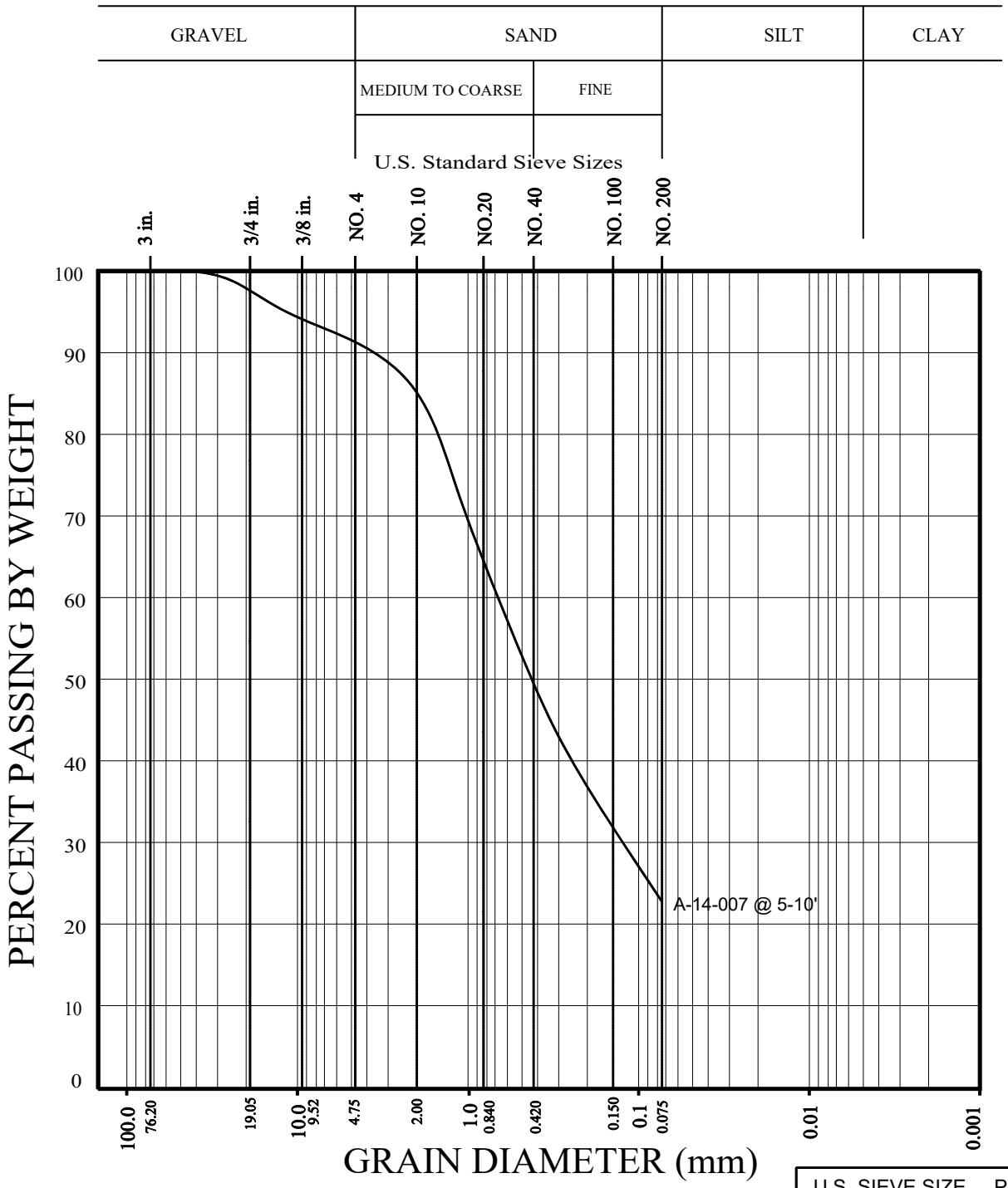

U.S. SIEVE SIZE	PERCENT
GRAVEL	9
SAND	68
FINES	23

GEOCON
WEST, INC.
ENVIRONMENTAL GEOTECHNICAL MATERIALS
3303 N. SAN FERNANDO BLVD. - SUITE 100 - BURBANK, CA 91504
PHONE (818) 841-8388 - FAX (818) 841-1704

GRAIN SIZE DISTRIBUTION

BEAR VALLEY ROAD OVERHEAD
AT BNSF RAILROAD
CITYOF VICTORVILLE, CALIFORNIA

Drafted by: JTA	Checked by: NDB	FEB 2017	PROJECT NO. A9072-06-01	FIG. B15

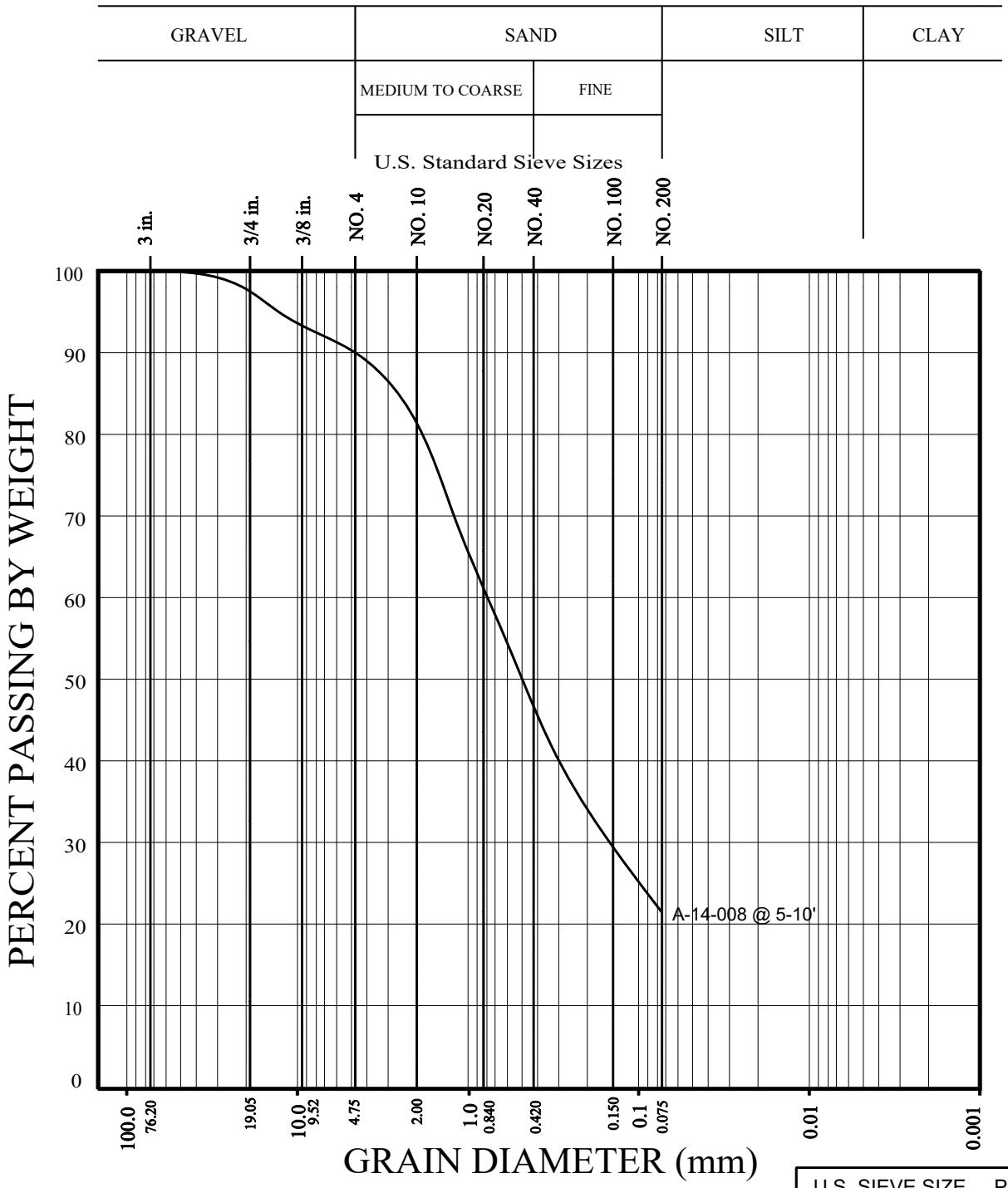

U.S. SIEVE SIZE	PERCENT
GRAVEL	10
SAND	69
FINES	21

GEOCON
WEST, INC.
ENVIRONMENTAL GEOTECHNICAL MATERIALS
3303 N. SAN FERNANDO BLVD. - SUITE 100 - BURBANK, CA 91504
PHONE (818) 841-8388 - FAX (818) 841-1704

GRAIN SIZE DISTRIBUTION

BEAR VALLEY ROAD OVERHEAD
AT BNSF RAILROAD
CITYOF VICTORVILLE, CALIFORNIA

Drafted by: JTA	Checked by: NDB	FEB 2017	PROJECT NO. A9072-06-01	FIG. B16

SUMMARY OF LABORATORY EXPANSION INDEX TEST RESULTS
ASTM D 4829-11

Sample No.	Moisture Content (%)		Dry Density (pcf)	Expansion Index	*UBC Classification	**CBC Classification
	Before	After				
A-14-002 @ 0-2'	7.4	12.2	118.0	1	Very Low	Non Expansive
A-14-003 @ 0-2'	7.3	11.5	119.1	0	Very Low	Non Expansive
A-14-005 @ 3'	8.6	18.0	109.1	3	Very Low	Non Expansive

* Reference: 1997 Uniform Building Code, Table 18-I-B.

** Reference: 2016 California Building Code, Section 1803.5.3

SUMMARY OF LABORATORY MAXIMUM DENSITY AND AND OPTIMUM MOISTURE CONTENT TEST RESULTS
ASTM D 1557-12

Sample No.	Soil Description	Maximum Dry Density (pcf)	Optimum Moisture (%)
A-14-002 @ 0-2'	Pale Brown Sand with Silt	134.1	7.6
A-14-003 @ 0-2'	Olive Brown Silty Sand	134.9	7.3
A-14-005 @ 8-12'	Olive Brown Sandy Silt	119.0	14.0
A-14-006 @ 0-5'	Olive Brown Silty Sand	134.0	7.0

SUMMARY OF LABORATORY R-VALUE TEST RESULTS
ASTM D 2844-13

Sample No.	Soil Description	R-Value
A-14-002 @ 0-2'	Brown Silty Sand	52
A-14-003 @ 0-2'	Olive Brown Silty Sand	53

GEOCON WEST, INC.
ENVIRONMENTAL GEOTECHNICAL MATERIALS
3303 N. SAN FERNANDO BLVD. - SUITE 100 - BURBANK, CA 91504
PHONE (818) 841-8388 - FAX (818) 841-1704

LABORATORY TEST RESULTS

BEAR VALLEY ROAD OVERHEAD
AT BNSF RAILROAD
CITYOF VICTORVILLE, CALIFORNIA

Drafted by: JTA	Checked by: NDB	FEB 2017	PROJECT NO. A9072-06-01	FIG. B17

Project Name: Bear Valley Overhead at BNSF
Location: Victorville, CA

Project No.: A9072-06-01
Sample No.: A-14-002@0-2'

Mold ID	A	B	C
Batch Weight	1200	1200	1200
Humidifying Moisture	48	48	48
Moisture Added	36	42	30
Soil + Mold	2950	2973	3260
Mold	1818	1826	2104
Soil	1132	1147	1156
Foot PSI	350	335	350
Height of Sample	2.41	2.46	2.48
Exudation Pressure	4800	3000	5900
Exudation PSI	380	240	470
Stability Ph	38	75	26
Turns Displacement	4.24	4.60	4.61
R-Value	66	38	74
Corrected R-Value	64	38	74
Thick by Stab./Foot	0.49	0.89	0.37
Expansion Reading	0	0	3
Thick/Exp. Press/Fppt	0.00	0.00	0.10
Moisture Content	9.5	10.0	8.9
Dry Density	130.2	128.3	129.5

Gradation Analysis

	Wt. Ret.	% Ret.
1"	-	0.8
3/4"	300	1
3/8"	835	3.9
#4	1661	7.7
Total	21,503g	

Sample Description:
SM: Brown Silty (F-C) Sand

R Value By Expansion:	82
R Value By Exudation	52
R Value By Equilibrium	**52**

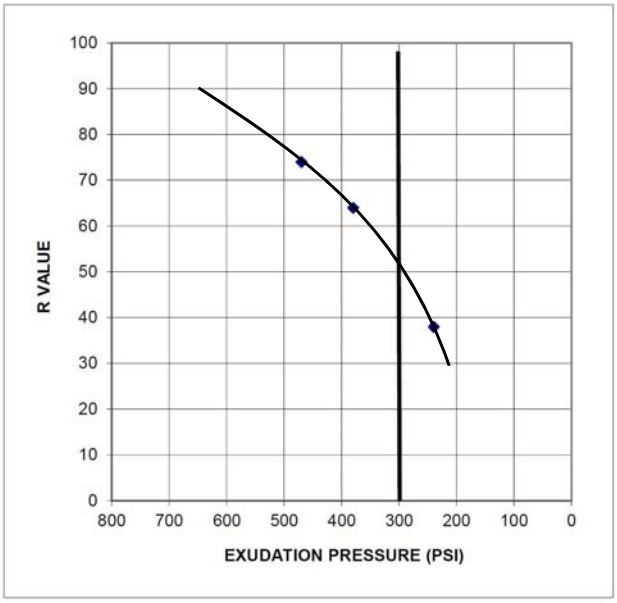

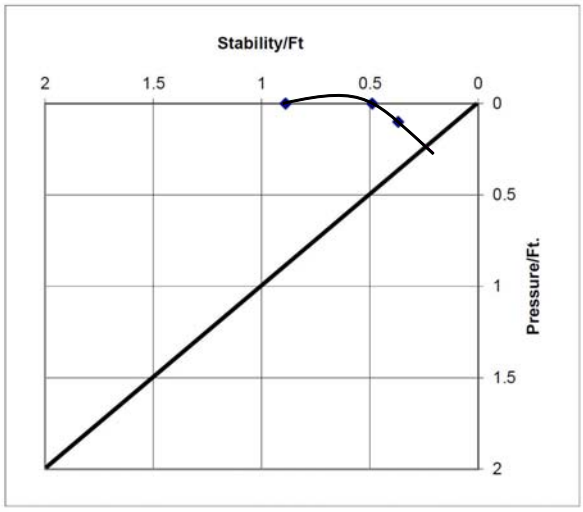

GEOCON WEST, INC.
ENVIRONMENTAL GEOTECHNICAL MATERIALS
3303 N. SAN FERNANDO BLVD. - SUITE 100 - BURBANK, CA 91504
PHONE (818) 841-8388 - FAX (818) 841-1704

R-VALUE TEST RESULTS

BEAR VALLEY ROAD OVERHEAD
AT BNSF RAILROAD
CITYOF VICTORVILLE, CALIFORNIA

JTA		8000	FEB 2017	PROJECT NO. A9072-06-01	FIG. B18

Project Name: Bear Valley Overhead at BNSF
Location: Victorville, CA

Project No.: A9072-06-01
Sample No.: A-14-003@0-2'

Mold ID	D	E	F
Batch Weight	1200	1200	1200
Humidifying Moisture	24	24	24
Moisture Added	48	60	54
Soil + Mold	3007	3082	2974
Mold	1851	1924	1806
Soil	1156	1158	1168
Foot PSI	350	350	350
Height of Sample	2.49	2.49	2.51
Exudation Pressure	9900	3700	4500
Exudation PSI	790	290	360
Stability Ph	19	60	36
Turns Displacement	5.14	4.56	4.74
R-Value	78	48	64
Corrected R-Value	78	48	64
Thick by Stab./Foot	0.32	0.75	0.52
Expansion Reading	0.6	0	0
Thick/Exp. Press/Fppt	0.20	0.00	0.00
Moisture Content	8.4	9.5	8.9
Dry Density	129.7	130.2	129.4

Gradation Analysis

	Wt. Ret.	% Ret.
1"	0	0
3/4"	106	0.5
3/8"	569	2.5
#4	1434	6.4
Total	22,468 g	

Sample Description:
SM- Olive Brown (F-C) Silty Sand with Some Clay

R Value By Expansion:	80
R Value By Exudation	53
R Value By Equilibrium	**53**

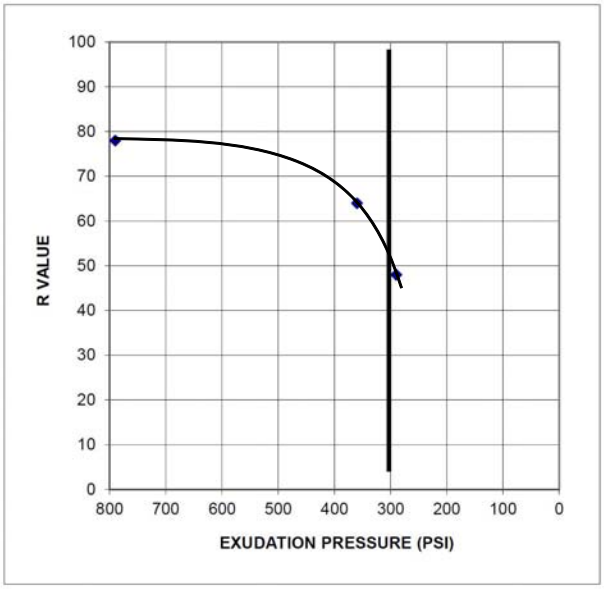

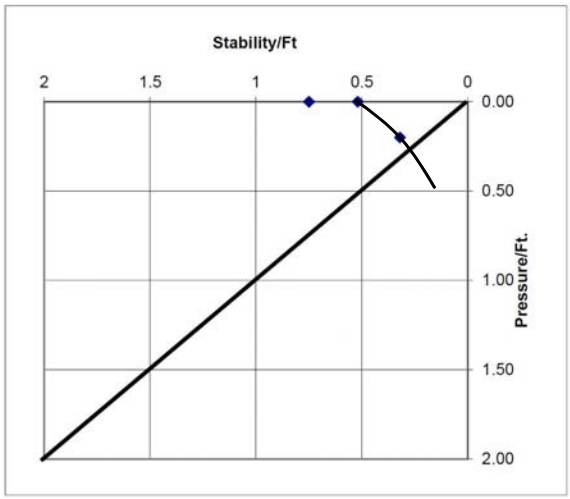

GEOCON WEST, INC.
ENVIRONMENTAL GEOTECHNICAL MATERIALS
3303 N. SAN FERNANDO BLVD. - SUITE 100 - BURBANK, CA 91504
PHONE (818) 841-8388 - FAX (818) 841-1704

R-VALUE TEST RESULTS

BEAR VALLEY ROAD OVERHEAD
AT BNSF RAILROAD
CITYOF VICTORVILLE, CALIFORNIA

JTA		8000	FEB 2017	PROJECT NO. A9072-06-01	FIG. B19

SUMMARY OF LABORATORY POTENTIAL OF HYDROGEN (pH) AND RESISTIVITY TEST RESULTS CALIFORNIA TEST NO. 643

Sample No.	pH	Resistivity (ohm centimeters)
A-14-005 @ 3'	7.63	3100
A-14-006 @ 0-5'	8.26	2600

SUMMARY OF LABORATORY CHLORIDE CONTENT TEST RESULTS EPA NO. 325.3

Sample No.	Chloride Ion Content (%)
A-14-005 @ 3'	0.001
A-14-006 @ 0-5'	0.004

SUMMARY OF LABORATORY WATER SOLUBLE SULFATE TEST RESULTS CALIFORNIA TEST NO. 417

Sample No.	Water Soluble Sulfate (% SO_4)	Sulfate Exposure*
A-14-005 @ 3'	0.000	Negligible
A-14-006 @ 0-5'	0.000	Negligible

* Reference: 2016 California Building Code, Section 1904.3 and ACI 318-11 Section 4.3.

GEOCON WEST, INC.
ENVIRONMENTAL GEOTECHNICAL MATERIALS
3303 N. SAN FERNANDO BLVD. - SUITE 100 - BURBANK, CA 91504
PHONE (818) 841-8388 - FAX (818) 841-1704

CORROSIVITY TEST RESULTS

BEAR VALLEY ROAD OVERHEAD
AT BNSF RAILROAD
CITYOF VICTORVILLE, CALIFORNIA

Drafted by: JTA	Checked by: NDB	FEB 2017	PROJECT NO. A9072-06-01	FIG. B20

APPENDIX C

APPENDIX C

LOG OF TEST BORING (LOTB) SHEETS

FOR

BEAR VALLEY OVERHEAD AT BNSF RAILROAD
VICTORVILLE, CALIFORNIA

PROJECT NO. A9072-06-01

REFERENCE: CALTRANS SOIL & ROCK LOGGING, CLASSIFICATION, AND PRESENTATION MANUAL (2010)

CEMENTATION

Description	Criteria
Weak	Crumbles or breaks with handling or little finger pressure.
Moderate	Crumbles or breaks with considerable finger pressure.
Strong	Will not crumble or break with finger pressure.

BOREHOLE IDENTIFICATION

Symbol	Hole Type	Description
Size	A	Auger Boring (hollow or solid stem bucket)
Size	R RW RC P	Rotary drilled boring (conventional) Rotary drilled with self-casing wire-line Rotary core with continuously-sampled, self-casing wire-line Rotary percussion boring (air)
Size	R	Rotary drilled diamond core
Size	HD HA	Hand driven (1-inch soil tube) Hand Auger
●	D	Dynamic Cone Penetration Boring
▲	CPT	Cone Penetration Test (ASTM D 5778)
[ ]	O	Other (note on LOTB)

Note: Size in inches.

CONSISTENCY OF COHESIVE SOILS

Description	Shear Strength (tsf)	Pocket Penetrometer Measurement, PP, (tsf)	Torvane Measurement, TV, (tsf)	Vane Shear Measurement, VS, (tsf)
Very Soft	Less than 0.12	Less than 0.25	Less than 0.12	Less than 0.12
Soft	0.12 - 0.25	0.25 - 0.5	0.12 - 0.25	0.12 - 0.25
Medium Stiff	0.25 - 0.5	0.5 - 1	0.25 - 0.5	0.25 - 0.5
Stiff	0.5 - 1	1 - 2	0.5 - 1	0.5 - 1
Very Stiff	1 - 2	2 - 4	1 - 2	1 - 2
Hard	Greater than 2	Greater than 4	Greater than 2	Greater than 2

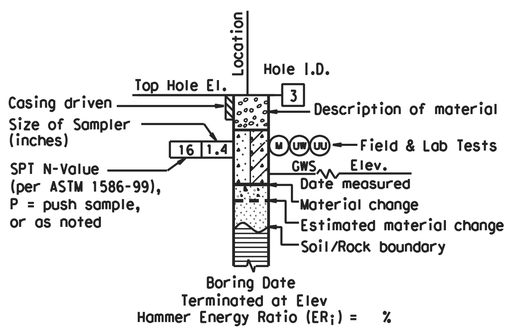

ROTARY BORING

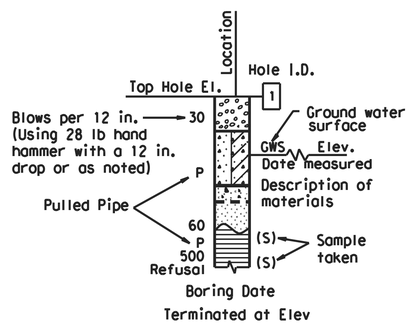

HAND BORING

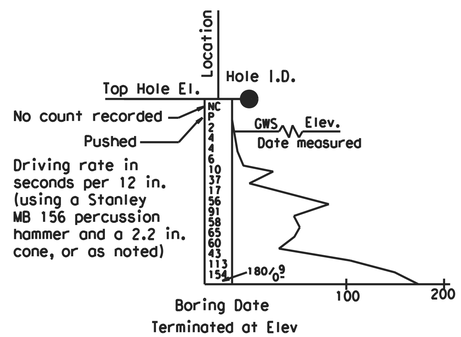

DYNAMIC CONE PENETRATION BORING

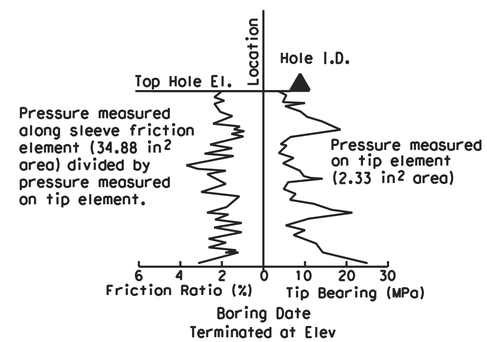

CONE PENETRATION TEST (CPT) BORING

NO.	REVISION	BY	DATE

DESIGNED: JELISA THOMAS
DRAWN: DIRK HANSEN
CHECKED: JELISA THOMAS

RECORD DRAWING DATE:
SCALE HORIZ: 80' VERT: 10'
PROJECT NO. XXXXX
CAD FILE: ...\511\2007_AB1.dgn

CITY OF VICTORVILLE
ENGINEERING DIVISION
14343 CIVIC DRIVE,
VICTORVILLE, CA 92392
(760) 955-5158

DOKKEN ENGINEERING
110 BLUE RAVINE ROAD SUITE 200, FOLSOM CA. 916-858-0642

JUANN RAMOS, PROJECT ENGINEER
DATE

REGISTERED PROFESSIONAL ENGINEER
JELISA THOMAS
NO.
CIVIL
STATE OF CALIFORNIA

BEAR VALLEY ROAD OH AT BNSF RAILROAD

LOG OF TEST BORINGS

4 OF

DWG. NO.

REFERENCE: CALTRANS SOIL & ROCK LOGGING, CLASSIFICATION, AND PRESENTATION MANUAL (2010)

GROUP SYMBOLS AND NAMES

Graphic/Symbol	Group Names
GW	Well-graded GRAVEL Well-graded GRAVEL with SAND
GP	Poorly-graded GRAVEL Poorly-graded GRAVEL with SAND
GW-GM	Well-graded GRAVEL with SILT Well-graded GRAVEL with SILT and SAND
GW-GC	Well-graded GRAVEL with CLAY (or SILTY CLAY) Well-graded GRAVEL with CLAY and SAND (or SILTY CLAY and SAND)
GP-GM	Poorly-graded GRAVEL with SILT Poorly-graded GRAVEL with SILT and SAND
GP-GC	Poorly-graded GRAVEL with CLAY (or SILTY CLAY) Poorly-graded GRAVEL with CLAY and SAND (or SILTY CLAY and SAND)
GM	SILTY GRAVEL SILTY GRAVEL with SAND
GC	CLAYEY GRAVEL CLAYEY GRAVEL with SAND
GC-GM	SILTY, CLAYEY GRAVEL SILTY, CLAYEY GRAVEL with SAND
SW	Well-graded SAND Well-graded SAND with GRAVEL
SP	Poorly-graded SAND Poorly-graded SAND with GRAVEL
SW-SM	Well-graded SAND with SILT Well-graded SAND with SILT and GRAVEL
SW-SC	Well-graded SAND with CLAY (or SILTY CLAY) Well-graded SAND with CLAY and GRAVEL (or SILTY CLAY and GRAVEL)
SP-SM	Poorly-graded SAND with SILT Poorly-graded SAND with SILT and GRAVEL
SP-SC	Poorly-graded SAND with CLAY (or SILTY CLAY) Poorly-graded SAND with CLAY and GRAVEL (or SILTY CLAY and GRAVEL)
SM	SILTY SAND SILTY SAND with GRAVEL
SC	CLAYEY SAND CLAYEY SAND with GRAVEL
SC-SM	SILTY, CLAYEY SAND SILTY, CLAYEY SAND with GRAVEL
PT	PEAT
	COBBLES COBBLES and BOULDERS BOULDERS

Graphic/Symbol	Group Names
CL	Lean CLAY Lean CLAY with SAND Lean CLAY with GRAVEL SANDY lean CLAY SANDY lean CLAY with GRAVEL GRAVELLY lean CLAY GRAVELLY lean CLAY with SAND
CL-ML	SILTY CLAY SILTY CLAY with SAND SILTY CLAY with GRAVEL SANDY SILTY CLAY SANDY SILTY CLAY with GRAVEL GRAVELLY SILTY CLAY GRAVELLY SILTY CLAY with SAND
ML	SILT SILT with SAND SILT with GRAVEL SANDY SILT SANDY SILT with GRAVEL GRAVELLY SILT GRAVELLY SILT with SAND
OL	ORGANIC lean CLAY ORGANIC lean CLAY with SAND ORGANIC lean CLAY with GRAVEL SANDY ORGANIC lean CLAY SANDY ORGANIC lean CLAY with GRAVEL GRAVELLY ORGANIC lean CLAY GRAVELLY ORGANIC lean CLAY with SAND
OL	ORGANIC SILT ORGANIC SILT with SAND ORGANIC SILT with GRAVEL SANDY ORGANIC SILT SANDY ORGANIC SILT with GRAVEL GRAVELLY ORGANIC SILT GRAVELLY ORGANIC SILT with SAND
CH	Fat CLAY Fat CLAY with SAND Fat CLAY with GRAVEL SANDY fat CLAY SANDY fat CLAY with GRAVEL GRAVELLY fat CLAY GRAVELLY fat CLAY with SAND
MH	Elastic SILT Elastic SILT with SAND Elastic SILT with GRAVEL SANDY elastic SILT SANDY elastic SILT with GRAVEL GRAVELLY elastic SILT GRAVELLY elastic SILT with SAND
OH	ORGANIC fat CLAY ORGANIC fat CLAY with SAND ORGANIC fat CLAY with GRAVEL SANDY ORGANIC fat CLAY SANDY ORGANIC fat CLAY with GRAVEL GRAVELLY ORGANIC fat CLAY GRAVELLY ORGANIC fat CLAY with SAND
OH	ORGANIC elastic SILT ORGANIC elastic SILT with SAND ORGANIC elastic SILT with GRAVEL SANDY ORGANIC elastic SILT SANDY ORGANIC elastic SILT with GRAVEL GRAVELLY ORGANIC elastic SILT GRAVELLY ORGANIC elastic SILT with SAND
OL/OH	ORGANIC SOIL ORGANIC SOIL with SAND ORGANIC SOIL with GRAVEL SANDY ORGANIC SOIL SANDY ORGANIC SOIL with GRAVEL GRAVELLY ORGANIC SOIL GRAVELLY ORGANIC SOIL with SAND

FIELD AND LABORATORY TESTING

- (C) Consolidation (ASTM D 2435)
- (CL) Collapse Potential (ASTM D 5333)
- (CP) Compaction Curve (CTM 216)
- (CR) Corrosivity Testing (CTM 643, CTM 422, CTM 417)
- (CU) Consolidated Undrained Triaxial (ASTM D 4767)
- (DS) Direct Shear (ASTM D 3080)
- (EI) Expansion Index (ASTM D 4829)
- (M) Moisture Content (ASTM D 2216)
- (OC) Organic Content-% (ASTM D 2974)
- (P) Permeability (CTM 220)
- (PA) Particle Size Analysis (ASTM D 422)
- (PI) Plasticity Index (AASHTO T 90) Liquid Limit (AASHTO T 89)
- (PL) Point Load Index (ASTM D 5731)
- (PM) Pressure Meter
- (R) R-Value (CTM 301)
- (SE) Sand Equivalent (CTM 217)
- (SG) Specific Gravity (AASHTO T 100)
- (SL) Shrinkage Limit (ASTM D 427)
- (SW) Swell Potential (ASTM D 4546)
- (UC) Unconfined Compression-Soil (ASTM D 2166) Unconfined Compression-Rock (ASTM D 2938)
- (UU) Unconsolidated Undrained Triaxial (ASTM D 2850)
- (UW) Unit Weight (ASTM D 4767)

APPARENT DENSITY OF COHESIONLESS SOILS

Description	SPT N_{60} (Blows / 12 in.)
Very Loose	0 - 5
Loose	5 - 10
Medium Dense	10 - 30
Dense	30 - 50
Very Dense	Greater than 50

MOISTURE

Description	Criteria
Dry	No discernable moisture
Moist	Moisture present, but no free water
Wet	Visible free water

PERCENT OR PROPORTION OF SOILS

Description	Criteria
Trace	Particles are present but estimated to be less than 5%
Few	5% - 10%
Little	15% - 25%
Some	30% - 45%
Mostly	50% - 100%

PARTICLE SIZE

Description		Size (in.)
Boulder		Greater than 12
Cobble		3 - 12
Gravel	Coarse	3/4 - 3
	Fine	1/5 - 3/4
Sand	Coarse	1/16 - 1/5
	Medium	1/64 - 1/16
	Fine	1/300 - 1/64
Silt and Clay		Less than 1/300

NO.	REVISION	BY	DATE

DESIGNED: JELISA THOMAS
DRAWN: DIRK HANSEN
CHECKED: JELISA THOMAS

RECORD DRAWING DATE:
SCALE HORIZ: 80' VERT: 10'
PROJECT NO. XXXXX
CAD FILE: ...\511\2007_AB1.dgn

CITY OF VICTORVILLE
ENGINEERING DIVISION
14343 CIVIC DRIVE,
VICTORVILLE, CA 92392
(760) 955-5158

DOKKEN ENGINEERING
110 BLUE RAVINE ROAD SUITE 200, FOLSOM CA. 916-858-0642
JUANN RAMOS, PROJECT ENGINEER DATE

REGISTERED PROFESSIONAL ENGINEER JELISA THOMAS NO. CIVIL STATE OF CALIFORNIA

BEAR VALLEY ROAD OH AT BNSF RAILROAD

LOG OF TEST BORINGS

DWG. NO.

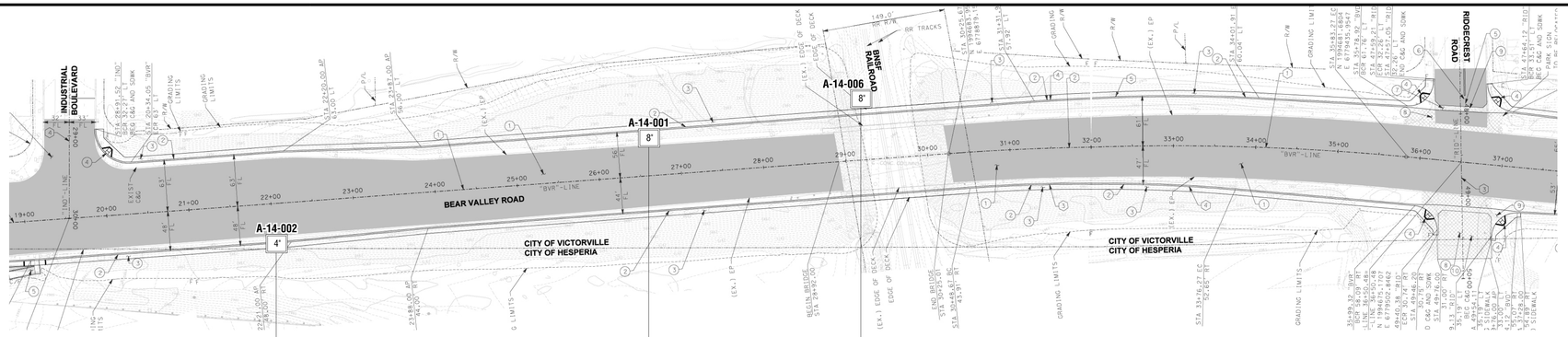

PLAN

SCALE: 1" = 80'

NOTES:

1. The consistency/apparent density descriptions are from Figures 2-9 and 2-10 of the Caltrans "Soil and Rock Logging, Classification, and Presentation Manual". These descriptors are based upon the Standard Penetration Test (ASTM D 1586)(corrected for Hammer Energy Ratio and the Modified California sampling method (ASTM D 3550). The descriptors based on the Mod Cal blow counts have been correlated to SPT blow counts based on a correction factor of 0.55 (Rogers, 2006).

2. Relatively undisturbed soil samples were obtained by driving a 3-inch outside diameter, with a 2.5-inch inside diameter (California Modified) split-spoon sampler for Modified California Sampling Methods and a 2-inch outside diameter split-spoon sampler for Standard Penetration Test Sampling Methods.

3. The boring logs and related information represent the opinion of the professional engineer as to the character of the material at the locations shown. Soil and groundwater conditions between adjacent test holes and at other locations may differ from those shown. Groundwater conditions may change with passage of time.

4. Test boring elevations are approximate based on topographic base sheet mapping prepared for this project.

5. Test boring locations were determined in the field based on staking and pacing from mapped site features. The locations of the explorations should be considered accurate only to the degree implied by the measuring methods used.

6. A 140-pound automatic hammer falling 30 inches was used to drive samplers.

7. Visual classification of earth materials was based on field inspection and was confirmed or revised with laboratory test results.

8. This LOTB sheet was prepared in accordance with the Caltrans Soil & Rock Logging, Classification, and Presentation Manual (2010).

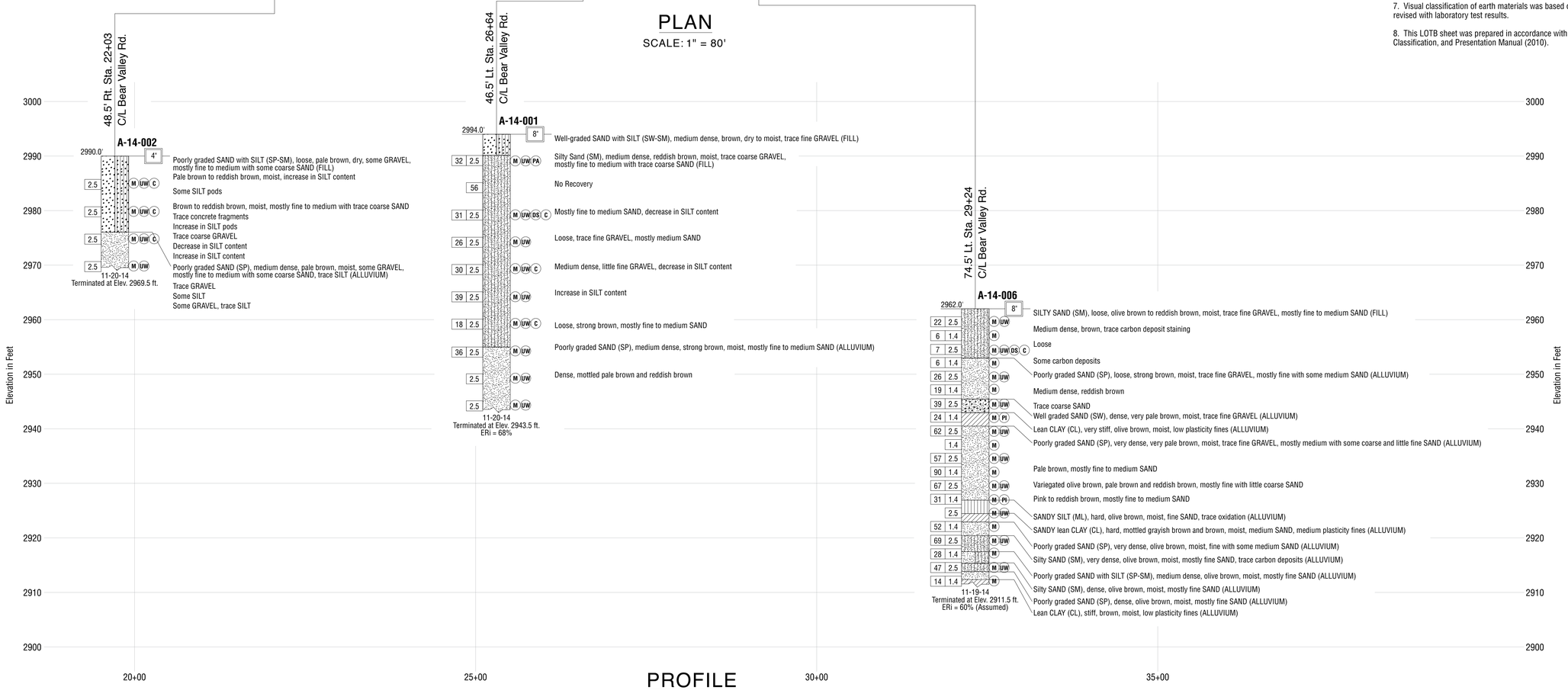

PROFILE

HORIZONTAL SCALE: 1" = 80'
VERTICAL SCALE: 1" = 10'

NO.	REVISION	BY	DATE

DESIGNED: JELISA THOMAS
DRAWN: DIRK HANSEN
CHECKED: JELISA THOMAS

RECORD DRAWING DATE:
SCALE HORIZ: 80' VERT: 10'
PROJECT NO. XXXXX
CAD FILE: ...\511\2007_AB1.dgn

CITY OF VICTORVILLE
ENGINEERING DIVISION
14343 CIVIC DRIVE,
VICTORVILLE, CA 92392
(760) 955-5158

DOKKEN ENGINEERING
110 BLUE RAVINE ROAD SUITE 200, FOLSOM CA. 916-858-0642
JUANN RAMOS, PROJECT ENGINEER
DATE

REGISTERED PROFESSIONAL ENGINEER
JELISA THOMAS
NO.
CIVIL
STATE OF CALIFORNIA

BEAR VALLEY ROAD OH AT BNSF RAILROAD

LOG OF TEST BORINGS

1 OF

DWG. NO.

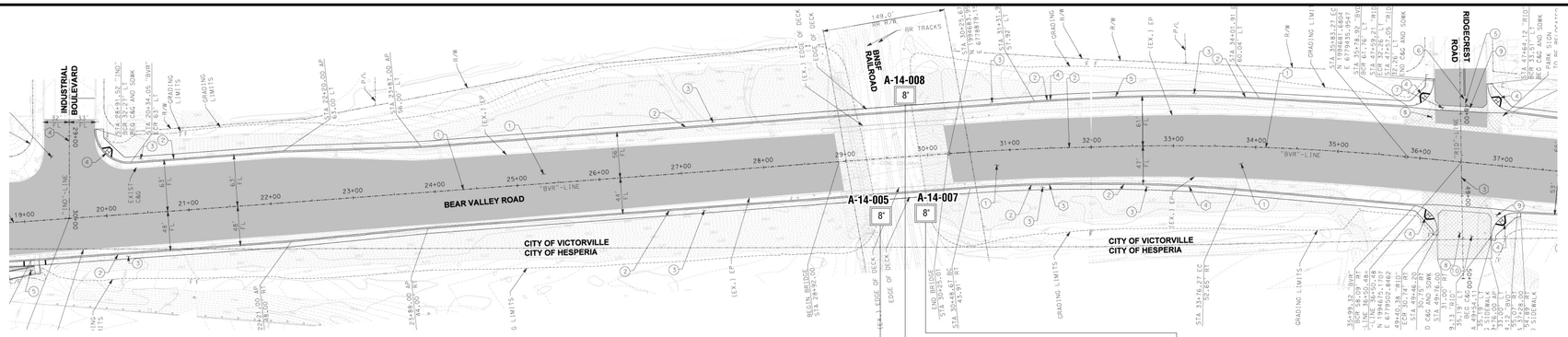

PLAN

SCALE: 1" = 80'

NOTES:

1. The consistency/apparent density descriptions are from Figures 2-9 and 2-10 of the Caltrans "Soil and Rock Logging, Classification, and Presentation Manual". These descriptors are based upon the Standard Penetration Test (ASTM D 1586)(corrected for Hammer Energy Ratio and the Modified California sampling method (ASTM D 3550). The descriptors based on the Mod Cal blow counts have been correlated to SPT blow counts based on a correction factor of 0.55 (Rogers, 2006).

2. Relatively undisturbed soil samples were obtained by driving a 3-inch outside diameter, with a 2.5-inch inside diameter (California Modified) split-spoon sampler for Modified California Sampling Methods and a 2-inch outside diameter split-spoon sampler for Standard Penetration Test Sampling Methods.

3. The boring logs and related information represent the opinion of the professional engineer as to the character of the material at the locations shown. Soil and groundwater conditions between adjacent test holes and at other locations may differ from those shown. Groundwater conditions may change with passage of time.

4. Test boring elevations are approximate based on topographic base sheet mapping prepared for this project.

5. Test boring locations were determined in the field based on staking and pacing from mapped site features. The locations of the explorations should be considered accurate only to the degree implied by the measuring methods used.

6. A 140-pound automatic hammer falling 30 inches was used to drive samplers.

7. Visual classification of earth materials was based on field inspection and was confirmed or revised with laboratory test results.

8. This LOTB sheet was prepared in accordance with the Caltrans Soil & Rock Logging, Classification, and Presentation Manual (2010).

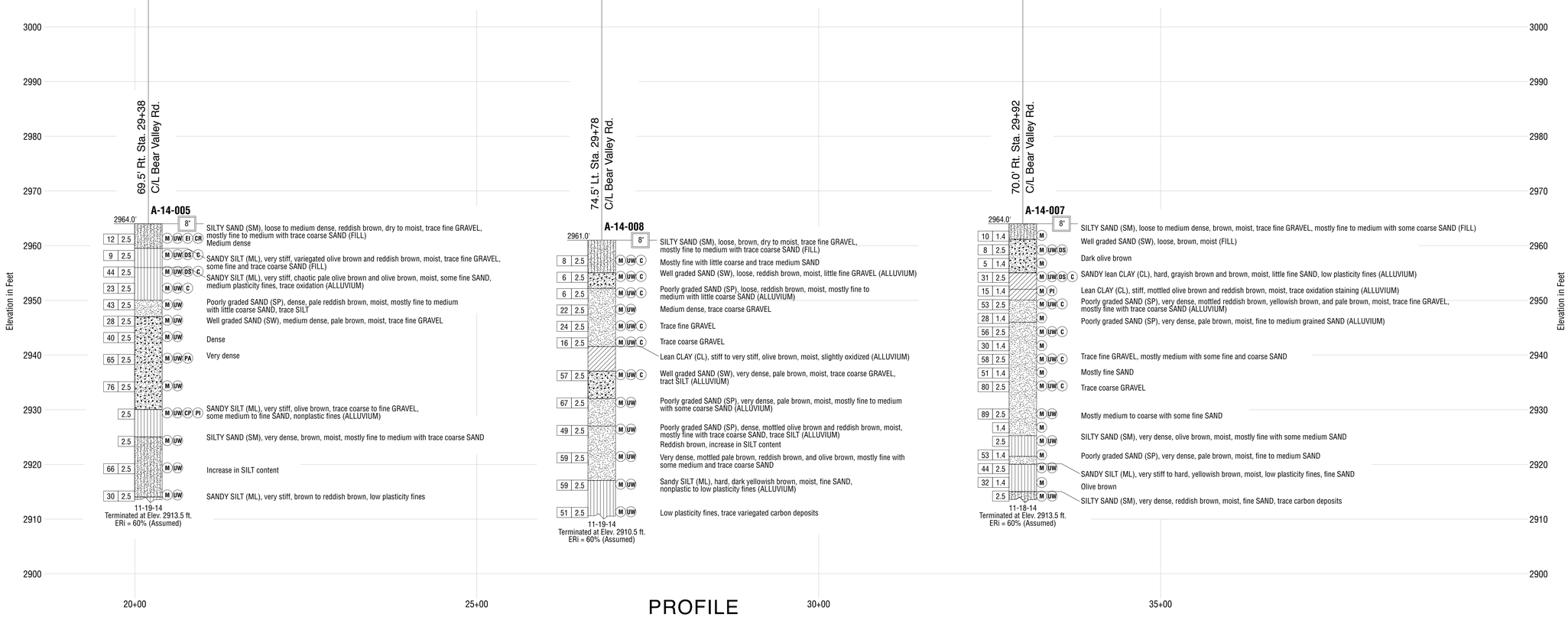

PROFILE

HORIZONTAL SCALE: 1" = 80'
VERTICAL SCALE: 1" = 10'

NO.	REVISION	BY	DATE

DESIGNED: JELISA THOMAS
DRAWN: DIRK HANSEN
CHECKED: JELISA THOMAS

RECORD DRAWING DATE:
SCALE HORIZ: 80' VERT: 10'
PROJECT NO. XXXXX
CAD FILE: ...\511\2007_AB1.dgn

CITY OF VICTORVILLE
ENGINEERING DIVISION
14343 CIVIC DRIVE,
VICTORVILLE, CA 92392
(760) 955-5158

DOKKEN ENGINEERING
110 BLUE RAVINE ROAD SUITE 200, FOLSOM CA. 916-858-0642

JUANN RAMOS, PROJECT ENGINEER
DATE

REGISTERED PROFESSIONAL ENGINEER
JELISA THOMAS
NO.
CIVIL
STATE OF CALIFORNIA

BEAR VALLEY ROAD OH AT BNSF RAILROAD

LOG OF TEST BORINGS

2 OF

DWG. NO.

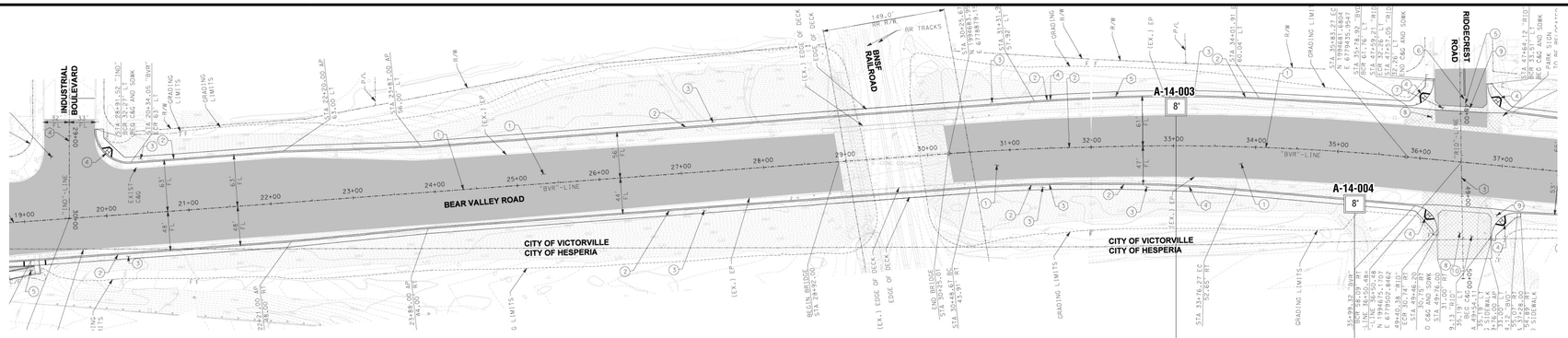

PLAN

SCALE: 1" = 80'

NOTES:

1. The consistency/apparent density descriptions are from Figures 2-9 and 2-10 of the Caltrans "Soil and Rock Logging, Classification, and Presentation Manual". These descriptors are based upon the Standard Penetration Test (ASTM D 1586)(corrected for Hammer Energy Ratio and the Modified California sampling method (ASTM D 3550). The descriptors based on the Mod Cal blow counts have been correlated to SPT blow counts based on a correction factor of 0.55 (Rogers, 2006).

2. Relatively undisturbed soil samples were obtained by driving a 3-inch outside diameter, with a 2.5-inch inside diameter (California Modified) split-spoon sampler for Modified California Sampling Methods and a 2-inch outside diameter split-spoon sampler for Standard Penetration Test Sampling Methods.

3. The boring logs and related information represent the opinion of the professional engineer as to the character of the material at the locations shown. Soil and groundwater conditions between adjacent test holes and at other locations may differ from those shown. Groundwater conditions may change with passage of time.

4. Test boring elevations are approximate based on topographic base sheet mapping prepared for this project.

5. Test boring locations were determined in the field based on staking and pacing from mapped site features. The locations of the explorations should be considered accurate only to the degree implied by the measuring methods used.

6. A 140-pound automatic hammer falling 30 inches was used to drive samplers.

7. Visual classification of earth materials was based on field inspection and was confirmed or revised with laboratory test results.

8. This LOTB sheet was prepared in accordance with the Caltrans Soil & Rock Logging, Classification, and Presentation Manual (2010).

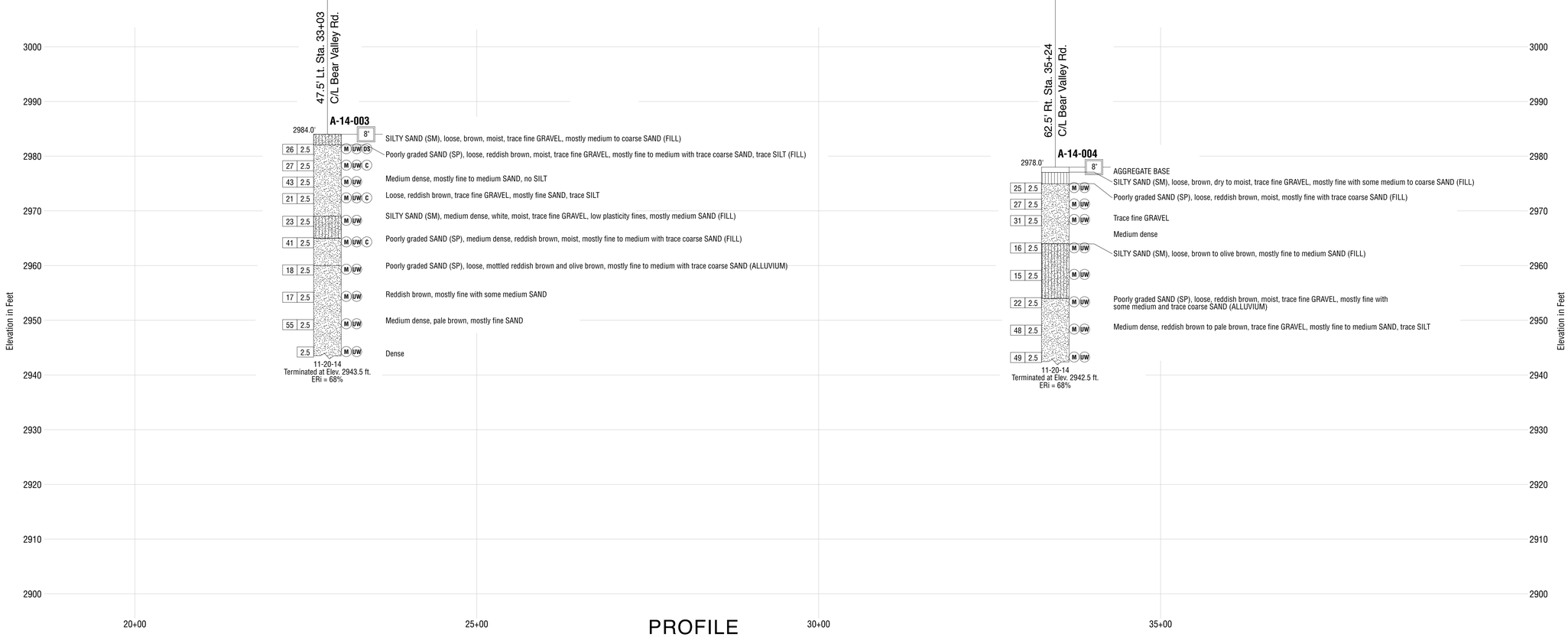

PROFILE

HORIZONTAL SCALE: 1" = 80'
VERTICAL SCALE: 1" = 10'

NO.	REVISION	BY	DATE

DESIGNED: JELISA THOMAS
DRAWN: DIRK HANSEN
CHECKED: JELISA THOMAS

RECORD DRAWING DATE:
SCALE HORIZ: 80' VERT: 10'
PROJECT NO. XXXXX
CAD FILE: ...\511\2007_AB1.dgn

CITY OF VICTORVILLE
ENGINEERING DIVISION
14343 CIVIC DRIVE,
VICTORVILLE, CA 92392
(760) 955-5158

DOKKEN ENGINEERING
110 BLUE RAVINE ROAD SUITE 200, FOLSOM CA. 916-858-0642

JUANN RAMOS, PROJECT ENGINEER
DATE

REGISTERED PROFESSIONAL ENGINEER
JELISA THOMAS
NO.
CIVIL
STATE OF CALIFORNIA

BEAR VALLEY ROAD OH AT BNSF RAILROAD

LOG OF TEST BORINGS

3 OF

DWG. NO.

Bear Valley- Aerially Deposited Lead Investigation Results (ADL 022817)

Geocon Project No. A9072-06-01
February 28, 2017

VIA EMAIL

Mr. Kris Kofoed, PE
Dokken Engineering
110 Blue Ravine Road, Suite 200
Folsom, California 95630

Subject: AERIALLY DEPOSITED LEAD INVESTIGATION RESULTS
BEAR VALLEY ROAD OVERHEAD AT BNSF RAILROAD
BRIDGE REHABILITATION AND WIDENING
VICTORVILLE, CALIFORNIA

Dear Mr. Kofoed:

In accordance with your request, Geocon performed sampling and analytical testing to evaluate the potential presence of aerially deposited lead (ADL) in soil within the vicinity of Bear Valley Road Overhead at the BNSF Railroad Bridge Rehabilitation and Widening project (the Site) in the City of Victorville, California. This report summarizes the purpose of the project and the scope of services requested by the Client, and outlines procedures and methods employed by Geocon to complete the project. The location of the Site is depicted on Figure 1.

PURPOSE AND SCOPE OF SERVICES

It is our understanding that the Client intends to scarify and re-compact the upper approximate 12 inches of soil adjacent to the existing roadway during the planned highway widening project. According to the Client no soil is currently planned to be exported from the Site.

The purpose of this investigation was to evaluate soil at the Site for the potential presence of hazardous concentrations of lead suspected due to impact from vehicle exhaust emissions when leaded gasoline was used. The information obtained from the ADL investigation will be used to evaluate soil reuse and/or disposal options, if necessary, and potential worker health and safety concerns. Our scope of services included collection and laboratory analysis of soil samples, and preparation of this report to document results of the investigation.

SAMPLING AND ANALYTICAL TESTING

On January 25, 2017, Geocon collected twelve soil samples from six hand-auger borings advanced at Site. Soil samples were collected from each boring at depths of 0 to 0.5 foot, and 1.0 to 1.5 feet. The approximate locations of the borings are shown on Figure 2.

The soil samples were collected by transferring the soil from the bottom end of the hand-auger bucket directly to laboratory-provided glass sample jars with Teflon–lined lids. Samples jars were labeled with a unique sample identification number, Geocon project number, date and time of collection. The samples were then placed in a portable cooler and transported to a certified laboratory for analyses under chain-of-custody procedures.

Sampling equipment was cleansed prior to each sampling effort using a non-phosphate detergent solution and two purified water rinses. Decontamination water was discharged to the ground surface away from areas potentially associated with surface water bodies or storm drain inlets. The hand-auger borings were backfilled with cuttings and surface soil from the immediate vicinity of the boring location.

The soil samples were submitted to Advanced Technology Laboratories (ATL), a State-certified laboratory located in Signal Hill, California following chain-of-custody procedures. The 12 soil samples were analyzed for total lead using U.S. Environmental Protection Agency (EPA) Test Method 6010B.

The borings were located utilizing a Global Positioning System (GPS) receiver. Data was recorded in the field and downloaded in the office using surveying TerraSync™ or similar software, in State Plane 83 coordinates. Boring latitude and longitudes coordinates in decimal degrees are provided in Table 1.

SAMPLE ANALYTICAL RESULTS

Analytical results are summarized below and in Table 1. Copies of laboratory reports and chain-of-custody documentations are attached.

Total lead was reported in 11 of the 12 samples at concentrations ranging from 1.5 to 5.4 milligrams per kilogram (mg/kg). Lead was not detected at a concentration equal to or greater than laboratory reporting limit of 1.0 mg/kg in one sample.

None of the samples collected from Site exhibited total lead concentrations greater than the Total Threshold Limit Concentration (TTLC) of 1,000 mg/kg, or greater than ten times the Soluble Threshold Limit Concentration (STLC) of 5.0 milligrams per liter (mg/l).

Based on these results further testing of the soil for soluble lead content was not necessary.

CONCLUSION AND RECOMMENDATION

The total lead concentrations reported for the soil samples were compared with the California Department of Toxic Substances Control (DTSC) HERO Note 3 Screening Level and the published background levels typically present in California soils as presented in *Background Concentrations of Trace and Major Elements in California Soils* (Kearney Foundation of Soil Science, Division of Agriculture and Natural Resources, University of California, March 1996).

None of the lead concentrations reported for the soil samples were greater than the DTSC Screening Levels for residential and commercial/industrial land use of 80 and 320 mg/kg, respectively. The lead concentrations in the soil samples are within the range of naturally occurring background levels.

None of the lead concentrations reported for the soil samples exceed the TTLC or ten times the STLC values.

Based upon the reported lead concentrations, the soil would be classified as non-hazardous with respect to lead content. Accordingly, the soil is suitable for onsite reuse without restriction.

REPORT LIMITATIONS

This report has been prepared exclusively for Dokken Engineering. The information obtained is only relevant as of the date of the latest site visit and will require an update to reflect additional information obtained.

The conclusions and recommendations presented herein are based on a limited number of samples collected from in-place soil locations. The purpose of these sampling and characterization activities was to reasonably predict the character of soil to be disturbed for planned construction activities within the described limits of the right-of-way.

The Client should recognize that this report is not a comprehensive site characterization and should not be construed as such. The appropriate regulatory agency may require additional investigations. The findings and conclusions as presented in this report are predicated on the results of the limited soil sampling and laboratory analyses performed. In addition, the information obtained is not intended to address potential impacts related to sources other than those specified herein.

Therefore, the report should only be deemed conclusive with respect to the information obtained. No guarantee or warranty of the results of the report is implied within the intent of this report or any subsequent reports, correspondence, or consultation, either express or implied. Geocon strived to perform the services summarized herein in accordance with the local standard of care in the geographic region at the time the services were rendered.

Please call if you have any questions or desire additional information.

Very truly yours,

GEOCON WEST, INC.

Mike Conkle, PG
Senior Geologist

Attachments: Figure 1, Vicinity Map
Figure 2, Site Plan Map
Table 1, Boring Coordinates and Summary of Analytical Results
Laboratory Analytical Report and Chain-of-custody Documentation

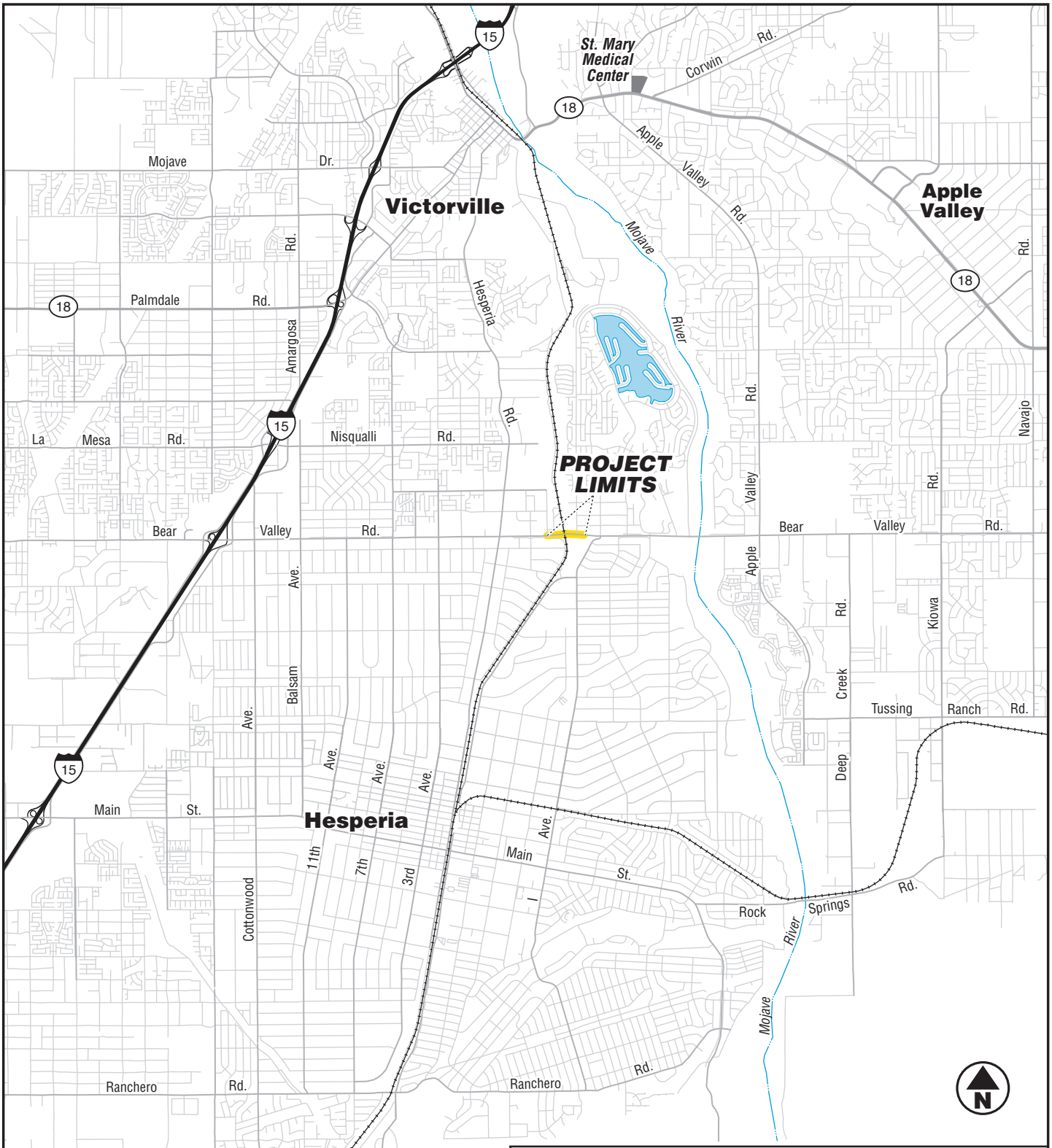

0 2

Scale in Miles

GEOCON WEST, INC.

3303 N. SAN FERNANDO BLVD. – SUITE 100 - BURBANK, CA. 91504
PHONE 818 841-8388 – FAX 818 841-1704

Bear Valley Road ISA

Victorville, California

VICINITY MAP

A9072-06-01	February 2017	Figure 1

Sample	Depth (ft.)	Total Lead
B-6-0.0	0.5	2.5
B-6-1.0	1.5	2.4

Sample	Depth (ft.)	Total Lead
B-5-0.0	0.5	3.4
B-5-1.0	1.5	2.0

Sample	Depth (ft.)	Total Lead
B-4-0.0	0.5	5.4
B-4-1.0	1.5	1.6

Sample	Depth (ft.)	Total Lead
B-1-0.0	0.5	2.5
B-1-1.0	1.5	2.3

Sample	Depth (ft.)	Total Lead
B-2-0.0	0.5	2.6
B-2-1.0	1.5	3.1

Sample	Depth (ft.)	Total Lead
B-3-0.0	0.5	< 1.0
B-3-1.0	1.5	1.5

LEGEND:

B-1 ⊗ Approximate Boring Location

Sample	Depth (ft.)	
B-1-0.0	0.5	collected from 0.0 to 0.5 ft.
B-1-1.0	1.5	collected from 1.0 to 1.5 ft.

Total Lead Concentrations in Milligrams per kilogram

N

0 150

Scale in Feet

GEOCON WEST, INC.
3303 N. SAN FERNANDO BLVD. – SUITE 100 - BURBANK, CA. 91504
PHONE 818 841-8388 – FAX 818 841-1704

Bear Valley Road ISA

Victorville, California

SITE PLAN

A9072-06-01	February 2017	Figure 2

TABLE 1
BORING COORDINATES AND SUMMARY OF ANALYTICAL RESULTS
BEAR VALLEY ROAD OVERHEAD AT BNSF RAILROAD BRIDGE
REHABILITATION AND WIDENING
VICTORVILLE, CALIFORNIA

Sample ID	LATITUDE	LONGITUDE	Sample Depth (feet)	Total Lead[3] (mg/kg)
B-1-0.0	34.471087	-117.280981	0.0 - 0.5	2.5
B-1-1.0			1.0 - 1.5	2.3
B-2-0.0	34.471239	-117.278302	0.0 - 0.5	2.6
B-2-1.0			1.0 - 1.5	3.1
B-3-0.0	34.471125	-117.276722	0.0 - 0.5	<1.0
B-3-1.0			1.0 - 1.5	1.5
B-4-0.0	34.471376	-117.276685	0.0 - 0.5	5.4
B-4-1.0			1.0 - 1.5	1.6
B-5-0.0	34.471489	-117.278294	0.0 - 0.5	3.4
B-5-1.0			1.0 - 1.5	2.0
B-6-0.0	34.471354	-117.280790	0.0 - 0.5	2.5
B-6-1.0			1.0 - 1.5	2.4

Notes:

1. Samples analyzed by Advanced Technology Laboratories of Signal Hill, California.
2. Samples were collected using a hand auger; sample depths in feet below ground surface.
3. U.S. Environmental Protection Agency (EPA) Method 6010; concentrations in milligrams per kilogram (mg/l
4. -- = Not analyzed.
5. <1.0 = Not Detected at concentration equal or greater than the laboratory reporting limit

February 02, 2017

Mike Conkle
Geocon West, Inc.
3303 N. San Fernando Blvd., Suite 100
Burbank, CA 91504
Tel: (818) 841-8388
Fax:(818) 841-1704

ELAP No.: 1838
CSDLAC No.: 10196
ORELAP No.: CA300003
TCEQ No. : T104704502

Re: ATL Work Order Number : 1700371
Client Reference : Bear Valley Rd ADL, A9072-06-01

Enclosed are the results for sample(s) received on January 25, 2017 by Advanced Technology Laboratories. The sample(s) are tested for the parameters as indicated on the enclosed chain of custody in accordance with applicable laboratory certifications. The laboratory results contained in this report specifically pertains to the sample(s) submitted.

Thank you for the opportunity to serve the needs of your company. If you have any questions, please feel free to contact me or your Project Manager.

Sincerely,

Eddie Rodriguez
Laboratory Director

The cover letter and the case narrative are an integral part of this analytical report and its absence renders the report invalid. Test results contained within this data package meet the requirements of applicable state-specific certification programs. The report cannot be reproduced without written permission from the client and Advanced Technology Laboratories.

Certificate of Analysis

Geocon West, Inc.		Project Number :	Bear Valley Rd ADL, A9072-06-01
3303 N. San Fernando Blvd., Suite 100		Report To :	Mike Conkle
Burbank , CA 91504		Reported :	02/02/2017

SUMMARY OF SAMPLES

Sample ID	Laboratory ID	Matrix	Date Sampled	Date Received
B-1-0.0	1700371-01	Soil	1/25/17 9:34	1/25/17 15:18
B-1-1.0	1700371-02	Soil	1/25/17 9:36	1/25/17 15:18
B-2-0.0	1700371-03	Soil	1/25/17 10:17	1/25/17 15:18
B-2-1.0	1700371-04	Soil	1/25/17 10:18	1/25/17 15:18
B-3-0.0	1700371-05	Soil	1/25/17 10:25	1/25/17 15:18
B-3-1.0	1700371-06	Soil	1/25/17 10:27	1/25/17 15:18
B-4-0.0	1700371-07	Soil	1/25/17 10:53	1/25/17 15:18
B-4-1.0	1700371-08	Soil	1/25/17 10:55	1/25/17 15:18
B-5-0.0	1700371-09	Soil	1/25/17 11:09	1/25/17 15:18
B-5-1.0	1700371-10	Soil	1/25/17 11:11	1/25/17 15:18
B-6-0.0	1700371-11	Soil	1/25/17 11:21	1/25/17 15:18
B-6-1.0	1700371-12	Soil	1/25/17 11:24	1/25/17 15:18

Certificate of Analysis

Geocon West, Inc.		Project Number :	Bear Valley Rd ADL, A9072-06-01
3303 N. San Fernando Blvd., Suite 100		Report To :	Mike Conkle
Burbank , CA 91504		Reported :	02/02/2017

Total Metals by ICP-AES EPA 6010B

Analyte: Lead **Analyst: GO**

Laboratory ID	Client Sample ID	Result	Units	PQL	Dilution	Batch	Prepared	Date/Time Analyzed	Notes
1700371-01	B-1-0.0	**2.5**	mg/kg	1.0	1	B7B0028	02/01/2017	02/02/17 09:08	
1700371-02	B-1-1.0	**2.3**	mg/kg	1.0	1	B7B0028	02/01/2017	02/02/17 09:11	
1700371-03	B-2-0.0	**2.6**	mg/kg	1.0	1	B7B0028	02/01/2017	02/02/17 09:13	
1700371-04	B-2-1.0	**3.1**	mg/kg	1.0	1	B7B0028	02/01/2017	02/02/17 09:14	
1700371-05	B-3-0.0	**ND**	mg/kg	1.0	1	B7B0028	02/01/2017	02/02/17 09:15	
1700371-06	B-3-1.0	**1.5**	mg/kg	1.0	1	B7B0028	02/01/2017	02/02/17 09:16	
1700371-07	B-4-0.0	**5.4**	mg/kg	1.0	1	B7B0028	02/01/2017	02/02/17 09:19	
1700371-08	B-4-1.0	**1.6**	mg/kg	1.0	1	B7B0028	02/01/2017	02/02/17 09:21	
1700371-09	B-5-0.0	**3.4**	mg/kg	1.0	1	B7B0028	02/01/2017	02/02/17 09:22	
1700371-10	B-5-1.0	**2.0**	mg/kg	1.0	1	B7B0028	02/01/2017	02/02/17 09:23	
1700371-11	B-6-0.0	**2.5**	mg/kg	1.0	1	B7B0028	02/01/2017	02/02/17 09:24	
1700371-12	B-6-1.0	**2.4**	mg/kg	1.0	1	B7B0028	02/01/2017	02/02/17 09:25	

Certificate of Analysis

Geocon West, Inc.		Project Number :	Bear Valley Rd ADL, A9072-06-01
3303 N. San Fernando Blvd., Suite 100		Report To :	Mike Conkle
Burbank , CA 91504		Reported :	02/02/2017

QUALITY CONTROL SECTION

Total Metals by ICP-AES EPA 6010B - Quality Control

Analyte	Result (mg/kg)	PQL (mg/kg)	Spike Level	Source Result	% Rec	% Rec Limits	RPD	RPD Limit	Notes
Batch B7B0028 - EPA 3050B_S									
Blank (B7B0028-BLK1)					Prepared: 2/1/2017 Analyzed: 2/2/2017				
Lead	ND	1.0			NR				
LCS (B7B0028-BS1)					Prepared: 2/1/2017 Analyzed: 2/2/2017				
Lead	46.2915	1.0	50.0000		92.6	80 - 120			
Matrix Spike (B7B0028-MS1)		**Source: 1700371-01**			Prepared: 2/1/2017 Analyzed: 2/2/2017				
Lead	107.633	1.0	125.000	2.52261	84.1	34 - 129			
Matrix Spike Dup (B7B0028-MSD1)		**Source: 1700371-01**			Prepared: 2/1/2017 Analyzed: 2/2/2017				
Lead	109.433	1.0	125.000	2.52261	85.5	34 - 129	1.66	20	

Certificate of Analysis

Geocon West, Inc.		Project Number :	Bear Valley Rd ADL, A9072-06-01
3303 N. San Fernando Blvd., Suite 100		Report To :	Mike Conkle
Burbank , CA 91504		Reported :	02/02/2017

Notes and Definitions

ND	Analyte is not detected at or above the Practical Quantitation Limit (PQL). When client requests quantitation against MDL, analyte is not detected at or above the Method Detection Limit (MDL)
PQL	Practical Quantitation Limit
MDL	Method Detection Limit
NR	Not Reported
RPD	Relative Percent Difference
CA2	CA-ELAP (CDPH)
OR1	OR-NELAP (OSPHL)
TX1	TX-NELAP (TCEQ)

Notes:
(1) The reported MDL and PQL are based on prep ratio variation and analytical dilution.
(2) The suffix [2C] of specific analytes signifies that the reported result is taken from the instrument's second column.
(3) Results are wet unless otherwise specified.

CHAIN OF CUSTODY RECORD

Advanced Technology Laboratories
3275 Walnut Avenue
Signal Hill, CA 90755
Tel: (562) 989-4045 • Fax: (562) 989-4040

FOR LABORATORY USE ONLY

P.O. #: _____

Logged By: _____ Date: _____

Method of Transport: Client ☐ ATL ☑ CA OverN ☐ FedEx ☐ Other: _____

Sample Condition Upon Receipt:
1. CHILLED Y ☑ N ☐
2. HEADSPACE (VOA) Y ☐ N ☐
3. CONTAINER INTACT Y ☑ N ☐
4. SEALED Y ☐ N ☑
5. # OF SPLS MATCH COC Y ☑ N ☐
6. PRESERVED Y ☐ N ☑

Client: Geocon
Attention: Mike Conkle
Address: 3303 North San Fernando Blvd Suite 100
City: Burbank State: CA Zip Code: 91504
Tel: 818-841-8388
Fax: 818-841-1704

Project Name: Bear Valley Rd ADL
Project #: A9072-06-01
Sampler: Mike Akoto (Signature)

Relinquished by: (Signature and Printed Name) Mike Akoto	Date: 1/25/17	Time: 1518	Received by: (Signature and Printed Name)	Date: 1/25/17	Time: 1558
Relinquished by: (Signature and Printed Name)	Date: 1/25/17	Time: 1735	Received by: (Signature and Printed Name)	Date: 1/25/17	Time: 1735
Relinquished by: (Signature and Printed Name)	Date:	Time:	Received by: (Signature and Printed Name)	Date:	Time:

I hereby authorize ATL to perform the work indicated below:
Project Mgr /Submitter: Mike Conkle 1/25/17
Print Name Date
Mike Akoto
Signature

Send Report To:
Attn: Mike Conkle & Mike Akoto
Co: Geocon Consultants Inc.
Addr: 3303 North San Fernando Blvd Suite 100
City: Burbank State: CA Zip: 91504

Bill To:
Attn: Mike Conkle
Co: Geocon Consultants Inc.
Addr: 3303 North San Fernando Blvd Suite 100
City: Burbank State: CA Zip: 91504

Special Instructions/Comments:
Run samples with total lead greater than or equal to 50 mg/kg by WET. Run samples with WET results greater than or equal to 5.0 mg/l by DI-WET. Run samples with total lead greater than or equal to 1,000 mg/kg for TCLP only

Sample/Records - Archival & Disposal
Unless otherwise requested by client, all samples will be disposed 45 days after receipt and records will be disposed 1 year after submittal of final report.

Storage Fees (applies when storage is requested):
- Sample :$2.00 / sample /mo (after 45 days)
- Records: $1 /ATL workorder /mo (after 1 year)

Circle or Add Analysis(es) Requested

SPECIFY APPROPRIATE MATRIX

QA/QC: RTNE ☐ CT ☐ SWRCB ☐ Logcode_____ OTHER _____

ITEM	LAB USE ONLY: Lab No.	Sample Description: Sample ID / Location	Date	Time	Lead	VOCs & Oxygenates by EPA Method	TPH (C6-C40)	Title 22 Metals BY Method 6010B/74	SOIL	WATER	GROUND WATER	WASTEWATER	TAT	Container(s) #	Type	PRESERVATION	REMARKS
	1700371-1	B-1-0.0	1/25/17	0934	x				x				D	1	G J		
	2	B-1-1.0		0936	x				x				D	1	G J		
	3	B-2-0.0		1017	x				x				D	1	G J		
	4	B-2-1.0		1018	x				x				D	1	G J		
	5	B-3-0.0		1025	x				x				D	1	G J		
	6	B-3-1.0		1027	x				x				D	1	G J		
	7	B-4-0.0		1053	x				x				D	1	G J		
	8	B-4-1.0		1055	x				x				D	1	G J		
	9	B-5-0.0		1109	x				x				D	1	G J		
	10	B-5-1.0		1111	x				x				D	1	G J		
	11	B-6-0.0		1121	x				x				D	1	G J		
	12	B-6-1.0		1124	x				x				D	1	G J		
					x				x				D	1	G J		
					x				x				D	1	G J		
					x				x				D	1	G J		
					x				x				D	1	G J		
					x				x				D	1	G J		
					x				x				D	1	G J		
					x				x				D	1	G J		
					x				x				D	1	G J		

- TAT starts 8AM the following day if samples received after 3 PM

TAT: ☐ A = Overnight ≤ 24 hrs ☐ B = Emergency Next Workday ☐ C = Critical 2 Workdays ☐ D = Urgent 3 Workdays ☑ E = Routine 7 Workdays

Container Types: T=Tube V=VOA L=Liter P=Pint J=Jar B=Tedlar G=Glass P=Plastic M=Metal

Preservatives:
H=HCl N=HNO_3 S=H_2SO_4 C=4°C
Z=$Zn(AC)_2$ O=NaOH T=$Na_2S_2O_3$

Bear Valley – Materials Report (MR 020817)

Project No. A9073-06-01
February 8, 2017

VIA ELECTRONIC MAIL

Mr. Juann Ramos, PE
Dokken Engineering
110 Blue Ravine Road, Suite 200
Folsom, California 95630

Subject: MATERIALS REPORT
BEAR VALLEY ROAD OVERHEAD AT BNSF RAILROAD
BRIDGE REHABILITATION AND WIDENING
VICTORVILLE, CALIFORNIA

Dear Mr. Ramos:

In accordance with your authorization, we herein submit our Materials Report (MR) for the proposed rehabilitation and widening of Bear Valley Road at the Burlington Northern Santa Fe (BNSF) Railroad crossing in the City of Victorville, California. The accompanying MR presents our findings, conclusions and recommendations related to the geotechnical and materials aspects of the project.

Please contact us if you have any questions regarding this MR or if we may be of further service.

Sincerely,

GEOCON WEST, INC.

REGISTERED PROFESSIONAL ENGINEER
JELISA M. THOMAS
74946
CIVIL
STATE OF CALIFORNIA

Jelisa Thomas Adams
PE 74946

PROFESSIONAL GEOLOGIST
GERALD KASMAN
NO. 2251
CERTIFIED ENGINEERING GEOLOGIST
STATE OF CALIFORNIA

Gerald A. Kasman
CEG 2251

TABLE OF CONTENTS

MATERIALS REPORT PAGE

1. INTRODUCTION 1
   1.1 Background 1
   1.2 Purpose and Scope of Services 1

2.0 PERTINENT REPORTS AND INVESTIGATIONS 2

3.0 EXISTING FACILITIES AND PROPOSED IMPROVEMENTS 2
   3.1 Existing Facilities 2
   3.2 Proposed Improvements 3

4.0 PHYSICAL SETTING 3
   4.1 Climate 3
   4.2 Topography and Drainage 4
   4.3 Prior Land Use 4
   4.4 Man-Made and Natural Features of Engineering and Construction Significance 4

5.0 GEOLOGY 5
   5.1 Regional Geology 5
   5.2 Site Geology 5
   5.3 Soil Conditions 5
   5.4 Field Exploration 5
   5.5 Laboratory Testing 7
   5.6 Groundwater 7

6.0 GEOLOGIC HAZARDS 8
   6.1 Faulting and Seismicity 8
   6.2 Liquefaction and Lateral Spreading 9
   6.3 Slope Stability 10

7.0 CORROSION 10

8.0 PAVEMENT 10
   8.1 Existing Pavement Structural Sections 10
   8.2 Visual Pavement Assessment Survey 11
   8.3 Existing Subgrade Conditions 12
   8.4 New Flexible Pavement Structural Sections 12
   8.5 Pavement Overlay 12
   8.6 Cold In-Place Recycling 14

9.0 DRAINAGE FACILITIES 14

10.0 EARTHWORK 15
   10.1 Cuts and Excavations 15
   10.2 Embankments/Fill Slopes 15

11.0 MATERIAL SOURCES 15

12.0 LIMITATIONS AND UNIFORMITY OF CONDITIONS 16

13.0 REFERENCES 17

TABLE OF CONTENTS (Continued)

FIGURES
Figure 1, Vicinity Map
Figure 2, Site Plan
Figure 3, Geologic Map
Figure 4, Recommended Design Response Spectrum

APPENDIX A
FIELD INVESTIGATION
Table A-1, Summary of Explorations
Borings A-14-001 through A-14-008, Boring Logs

APPENDIX B
LABORATORY TESTING
Figures B1 and B2, Direct Shear Test Results
Figures B3 through B9, Consolidation Test Results
Figure B10, Atterberg Limits
Figure B11 through B16, Grain Size Distribution
Figure B17, Laboratory Test Results
Figure B18 and B19, R-Value Test Results
Figure B20, Corrosivity Test Results

APPENDIX C
LOG OF TEST BORING SHEETS

APPENDIX D
As-Built Plans for *Bear Valley Cutoff, Apatite Street to Tamarisk Avenue*, July 24, 1979.

APPENDIX E
CALCULATIONS

MATERIALS REPORT

1. INTRODUCTION

This Materials Report (MR) was prepared for the proposed rehabilitation and widening of Bear Valley Road at the Burlington Northern Santa Fe (BNSF) Railroad crossing in the City of Victorville, California. The approximate project location is shown on the Vicinity Map, Figure 1. This MR is based on a geotechnical investigation performed by Geocon West, Inc. (Geocon). The purpose of the investigation was to evaluate general subsurface geologic and geotechnical conditions within the area of proposed roadway improvements and to provide geotechnical recommendations for use in preparing project plans and specifications.

The recommendations presented herein are based on our review of subsurface and laboratory data from our geotechnical investigation, engineering analysis, and our experience with similar soil and geologic conditions. Boring logs are presented in Appendix A. Laboratory test results are presented in Appendix B. Log of Test Borings (LOTB) sheets in Caltrans format are presented in Appendix C. The As-Built plans for the existing Bear Valley Road are presented in Appendix D. Calculations are presented in Appendix E.

1.1 Background

The City of Victorville is proposing to widen Bear Valley Road at the BNSF Railroad crossing. The proposed project consists of rehabilitating, retrofitting, and widening the existing bridge which carries Bear Valley Road over the BNSF Railroad in order to meet current AASHTO safety standards and Super Arterial standard roadway configurations set forth by the City of Victorville. Additional improvements are proposed to include widening the roadway approaches to accommodate the widened bridge, modification of the traffic signals at Industrial Boulevard and Ridgecrest Road, and increasing the left-turn vehicle storage at the Ridgecrest Road intersection.

1.2 Purpose and Scope of Services

The purpose of this report is to document subsurface geotechnical conditions, provide analyses of anticipated site conditions as they pertain to the project described herein, and to recommend geotechnical design and construction criteria for the project as presently proposed. This MR was prepared to address the geotechnical aspects of proposed pavements, drainage facilities, and materials sources. Other geotechnical aspects of the project are addressed in the *Geotechnical Design Report* (GDR) and *Foundation Report* (FR) prepared by Geocon and submitted under separate covers.

To prepare this MR, we:

- Reviewed published geologic maps, aerial photographs, in-house documents, and available as-built information. A list of referenced materials is provided in Section 13.0.

- Reviewed available as-built plans and project information regarding the existing bridge foundations and proposed improvements.
- Performed a field reconnaissance to observe the existing conditions of the bridge and surrounding areas.
- Drilled eight exploratory borings (A-14-001 through A-14-008) at both sides of the existing bents and along the bridge approaches to maximum depths of 50½ feet to examine and sample the prevailing soil conditions.
- Performed laboratory tests on selected samples to evaluate pertinent geotechnical parameters.
- Performed engineering analyses to evaluate paving design recommendations.
- Prepared this MR in general accordance with current Caltrans guidelines.

2.0 PERTINENT REPORTS AND INVESTIGATIONS

The following as-built plans for were provided by Dokken Engineering: *Bear Valley Cutoff, Apatite Street to Tamarisk Avenue,* 30 sheets, prepared by County of San Bernardino Transportation Department dated July 24, 1979. Copies of the as-built plans are included as Appendix D.

3.0 EXISTING FACILITIES AND PROPOSED IMPROVEMENTS

3.1 Existing Facilities

The existing Bear Valley Road overhead at the BNSF Railroad crossing is located approximately 3.8 miles east of Interstate-15 and is located almost entirely within Victorville city limits. A small portion of the project is located within Hesperia city limits.

The project limits extend from Station (Sta.) 18+00, which is approximately 135 feet west of Industrial Boulevard, to Sta. 40+85, which is approximately 535 feet east of Ridgecrest Road.

The existing Bear Valley overhead at BSFN railroad consists of a three-span, precast and prestressed I-Girder bridge supported by two end abutments and two interior bents. The abutments and bents are supported on conventional spread foundations. The bridge alignment extends approximately 133 linear feet, from approximate Sta. 28+92 to Sta. 30+25 with a width of approximately 80 feet.

The roadway approaches to the bridge consist of elevated fill embankments up to 36 feet high with side slope inclinations at approximately 2:1 (horizontal to vertical). There are currently no retaining structures at the site.

An existing 10-foot by 4-foot reinforced concrete box culvert crosses the roadway alignment at Sta. 29+12, which is just west of bent 2. The culvert is reported to have an inlet invert elevation of 2954.5 feet above Mean Sea Level (MSL) and an outlet invert elevation of 2951.72 feet MSL.

An existing 36-inch ACP drainpipe also crosses the roadway alignment at Sta. 30+12, which is just east of bent 3. The drainpipe is reported to have invert elevations between 2956 and 2958 feet MSL.

3.2 Proposed Improvements

The improvements discussed herein are based on project plans provided by Dokken Engineering. As depicted on the plans, the project begins at Sta. 18+00 on the west and ends at Sta. 40+85 on the east. The total length of the proposed project is approximately 0.4 miles. Stationing is based on the Bear Valley Road centerline. The project layout is shown on the Site Plan, Figure 2.

The project will widen, retrofit, and rehabilitate the existing bridge on Bear Valley Road at the BNSF overcrossing. The bridge will be widened approximately 32 feet to accommodate the construction of 6-foot-wide sidewalks, 8-foot-wide shoulders, and a 12-foot-wide median. Improvements to the bridge will involve seismic retrofits and construction of pier protection walls (crash walls). Rehabilitation of the bridge will require sealing of the deck with methacrylate resin, patching holes, and sealing cracks in the concrete slope protection located near the abutments.

Additional improvements will include widening the roadway approaches to accommodate the widened bridge, modification of the traffic signals at Industrial Boulevard and Ridgecrest Road, and increasing the left-turn vehicle storage at the Ridgecrest Road intersection.

4.0 PHYSICAL SETTING

4.1 Climate

Monthly climate data near the project site are presented in Table 4.1. This data was obtained from information published on line by Western Regional Climate Center (www.wrcc.dri.edu). The monthly data were recorded from 1917 to 2015 and the station used for recording (Victorville, #049325, California) was located at Latitude 34.535°; Longitude -117.035°; Elevation 2858 feet above mean sea level (MSL). Datum for all elevations in this report is NAVD 88.

TABLE 4.1
MONTHLY CLIMATE SUMMARY

Climate Data	Jan	Feb	Mar	Apr	May	Jun	Jul	Aug	Sep	Oct	Nov	Dec	Annual
Avg. Total Precipitation (inches)	0.95	1.05	0.80	0.36	0.13	0.04	0.14	0.21	0.23	0.32	0.50	0.79	5.52
Avg. High (°F)	58.8	62.1	67.0	74.2	82.7	91.6	98.1	97.2	91.3	80.2	67.3	59.4	77.5
Avg. Low (°F)	29.8	33.1	36.6	41.5	47.9	54.3	60.8	60.2	54.1	44.4	34.5	29.2	43.9

Based on the information obtained, the average precipitation for a calendar year is 5.52 inches. The majority of this precipitation (approximately 86 percent) falls between October and April. The warmest month is July with an average high of 98.1°F and average low of 60.8°F. The coolest month is January with an average high of 58.8°F and an average low of 29.8°F. Contractors should be aware of compaction and workability difficulties that can occur during earthwork in wetter months or periods of precipitation. In addition, grading operations conducted during warmer months may require significant addition of water to properly moisture-condition fill materials.

4.2 Topography and Drainage

The project vicinity is relatively flat with localized variations. The average roadway ground surface elevations range from approximately 2989 feet MSL at the western project extent (Sta. 18+00) to approximately 2992 feet MSL at the existing Bear Valley Road overhead bridge deck to approximately 2957 feet MSL at the eastern project extent (Sta. 40+85). The roadway approaches to the bridge consist of elevated fill embankments up to 36 feet high with side slope inclinations at approximately 2:1 (horizontal to vertical).

To the east of the intersection of Bear Valley Road and Ridgecrest Road, between Sta. 36+50 and 40+85, the north side of Bear Valley Road is bounded by an ascending slope up to 20 feet high with side slope inclinations of approximately 2.5:1 (H:V).

Below the existing bridge, within the BSNF railroad right-of-way, the ground surface elevation is approximately 2965 feet MSL.

Site drainage occurs via sheet flow across the roadway and existing embankments. A drainage culvert and ditch is located along the west side of the BNSF right-of-way. The Mojave River is located approximately 1.5 miles to the east of the project site, but is not located within the project limits. Site topography is depicted on the Site Plan, Figure 2.

4.3 Prior Land Use

Current land use in the project area is a mix of undeveloped, commercial, and industrial. Based on review of historical aerial photographs, prior land use appears to be primarily vacant land.

4.4 Man-Made and Natural Features of Engineering and Construction Significance

The project footprint generally abuts a mix of undeveloped, commercial, and industrial land (parking lots and buildings). The man made features that may be impacted by the project include the existing roadways, embankments, the BNSF Railroad right-of-way, drainage culverts and utilities. The proposed project improvements are not anticipated to adversely impact the existing developments and existing features are not anticipated to adversely affect the project. The project layout is shown on the Site Plan, Figure 2.

5.0 GEOLOGY

5.1 Regional Geology

Site geologic information was obtained from the *Geologic Map of the Hesperia 15 Minute Quadrangle, San Bernardino County, California,* (Dibblee, 2008). The site is located in the southwestern portion of the Mojave Desert, approximately 17 miles northeast of the San Gabriel Mountains. Regionally, the site is in the San Bernardino Valley within the Mojave Desert between the Peninsular Range geomorphic province to the south and the Transverse Range geomorphic province to the north.

5.2 Site Geology

The site is underlain by previously placed fill underlain by Pleistocene Age older alluvial deposits consisting of sediment derived from the surrounding mountains and corresponding drainage systems (Dibblee, 1967). The San Bernardino Valley is filled with a thick sequence of Pleistocene to recent age sedimentary deposits both continental and marine in origin. A portion of the geologic map covering the site vicinity is presented as Figure 3. Published mapping of the site geology is consistent with the conditions encountered in our explorations.

5.3 Soil Conditions

The soil and groundwater conditions encountered are described in detail below and on the boring logs and LOTB sheets presented in Appendices A and C, respectively.

5.3.1 Fill

Existing fill was encountered in each of our borings. The fill encountered in our borings generally consisted of loose to medium dense silty sand (SP-SM) with varying amounts of gravel. The existing fill appears to be performing well and is considered suitable for continued support of the existing improvements.

5.3.2 Alluvium

Alluvium, characterized as Pleistocene age older alluvial fan deposits (Morton & Miller, 2003), was encountered in each of our borings. The alluvium encountered generally consists of medium dense to dense poorly graded sand (SP) and well graded sand (SW). The alluvium is considered suitable for continued support of the existing improvements.

5.4 Field Exploration

The field investigation for this project was performed between November 18 and 20, 2014, and consisted of a site reconnaissance and drilling eight borings. The boring locations were based on project plans and information from Dokken Engineering. Table 5.4 summarizes the exploration locations, approximate surface elevations, and depths. The approximate boring locations are shown on the Site Plan, Figure 2.

TABLE 5.4
SUMMARY OF EXPLORATIONS

Exploration No.	Approximate Exploration Location				Exploration Depth (feet)
	Station No.	Line	Offset (feet)	Elevation (feet) [1]	
A-14-001	26+64	B.V. Rd CL	46.5L	2994	50.5
A-14-002	22+03	B.V. Rd CL	48.5R	2990	20.5
A-14-003	33+30	B.V. Rd CL	47.5L	2984	40.5
A-14-004	35+24	B.V. Rd CL	62.5R	2978	35.5
A-14-005	29+38	B.V. Rd CL	69.5R	2964	50.5
A-14-006	29+24	B.V. Rd CL	74.5L	2962	50.5
A-14-007	29+92	B.V. Rd CL	70R	2964	50.5
A-14-008	29+78	B.V. Rd CL	74.5L	2961	50.5

Note 1: Assumed elevations per 35% Project Plans.

Borings A-14-001, -003, and -004 were drilled using a track-mounted CME-75 drill rig equipped with a 8-inch diameter, hollow-stem augers; boring A-14-002 was drilled with hand auger equipment; and borings A-14-005 through A-14-008 were drilled using truck-mounted CME-75 drill rig equipped with 8-inch diameter, hollow-stem augers. Borings were advanced to depths ranging from approximately 20½ to 50½ feet.

Sampling during drilling was performed in general accordance with the current Caltrans' *Soil and Rock Logging, Classification and Presentation Manual* (2010). Soil samples were typically collected at approximately 2.5- to 5-foot intervals. Relatively undisturbed soil samples were obtained by driving an approximately 3-inch outside-diameter (OD) split-spoon sampler (California modified sampler) into the "undisturbed" soil mass with blows from a 140-pound hammer falling 30 inches. The sampler was equipped with 1-inch-long by 2.5-inch-diameter brass rings to facilitate sample removal and laboratory testing. Standard Penetration Tests (SPTs) were performed by driving a 2-inch OD split-spoon sampler 18 inches in general accordance with American Society for Testing and Materials (ASTM) D-1586. The number of blows required to drive the samplers (blow counts) the 18-inch sample drive (or portion thereof) are reported on the boring logs and Logs of Test Boring (LOTB) sheets included in Appendices A and C, respectively. Bulk samples of soil cuttings were also collected during the field exploration. In addition, a pocket penetrometer was used in the field to determine the consistency of cohesive soil.

The exploratory borings were sampled and logged by a staff engineer during the drilling operations. The soils encountered in the exploratory borings were classified in accordance with the Caltrans' *Soil and Rock Logging, Classification, and Presentation Manual* (2010). Upon completion of the field exploration program, the exploratory borings were backfilled with soil cuttings.

Samples were placed in sealed containers and transported to our laboratory for testing and further classification. Boring logs are included in Appendix A. The LOTB sheets in Caltrans format are presented in Appendix C.

5.5 Laboratory Testing

Laboratory tests were performed in accordance with California Test Methods (CTM) or generally accepted test methods of the ASTM. The types of the tests performed are listed below:

- In-Place Dry Density and Moisture Content: ASTM D2937 (CTM 226)
- Direct Shear Strength: ASTM D 3080
- Consolidation: ASTM D2 435
- Atterberg Limits: ASTM D 4318
- Grain Size Distribution: ASTM D 422
- Compaction Curve: D 1557
- R-value: CTM 301
- pH and Resistivity: CTM 643
- Sulfate Content: CTM 417
- Chloride Content: CTM 422

Test results and related information are provided in Appendix B. The results of dry density and moisture content testing are presented on the boring logs and LOTB sheets (Appendix C).

5.6 Groundwater

Groundwater was not encountered in the borings drilled during our subsurface evaluation and is not anticipated to be a significant design or construction consideration for the project. Fluctuations of groundwater levels may occur due to variations in precipitation, temperature, and other factors. Depth to groundwater can also vary significantly due to localized pumping, irrigation practices, and seasonal fluctuations. Therefore, it is possible that future groundwater may be higher or lower than the levels observed during our investigation.

Based on the California Department of Water Resources (DWR) water data library (http://www.water.ca.gov/waterdatalibrary/), periodic groundwater measurements for a cluster of groundwater observation wells located approximately 1,200 feet south of the site was available for the period of March 1994 through September 2014. The four observation wells comprising the cluster (identified as state wells 04N04W03A001S, 04N04W03A002S, 04N04W03A003S, and 04N04W03A004S) were completed to depths ranging from approximately 235 to 790 feet below the existing ground surface. Periodic measurements in each well indicate variable groundwater elevations seasonally fluctuating between a high of approximately 2,806 feet MSL to a low of approximately 2,750 feet MSL corresponding to groundwater depths of 177 feet to 232 feet below

ground surface, respectively. Groundwater was not encountered in the borings excavated to a maximum depth of approximately 50½ feet during our subsurface evaluation.

The *Bear Valley Road Cutoff Widen General Plan* includes LOTB sheets for four prior borings conducted at the site in 2001. The prior borings were conducted to maximum depths of approximately 74½ feet (corresponding to elevation 2,889). The LOTBs do not indicate that groundwater was encountered during the boring excavation.

6.0 GEOLOGIC HAZARDS

6.1 Faulting and Seismicity

The project site does not lie within or adjacent to an Alquist-Priolo Earthquake Fault Zone. In addition, the site is not located on any known "active" earthquake fault trace. Therefore, the potential for ground rupture due to onsite active faulting is considered to be low.

Site seismicity was analyzed based on Caltrans' *2013 Seismic Design Procedure*. This procedure is based on current Caltrans *Seismic Design Criteria (Appendix B), Deterministic PGA Map, ARS Online Report, Geotechnical Manual,* and USGS probabilistic seismic hazard analysis and tools. Based on Caltrans' web-based *ARS Online* application (V2.3.06, accessed January 17, 2015) and associated reports, key information for the controlling faults is summarized in Table 6.1 below.

TABLE 6.1
FAULT INFORMATION

Fault Name	North Frontal (West)	San Andreas (S. San Bernardino)	Helendale– So Lockhart
Fault ID#	279	325	241
M_{Max}	7.2	7.9	7.4
Fault Type	Rev	SS	SS
Fault Dip	49°	90°	90°
Dip Direction	S	V	V
Top of Rupture	0 km	0 km	0 km
Bottom of Rupture	15.8 km	12.8 km	13 km
Distance to Site (R_{RUP})	10.11 km	27.83 km	20.63 km
Depth to rock with Shear Wave Velocity of 1 km/sec ($Z_{1.0}$)	n/a*	n/a*	n/a*
Depth to rock with Shear Wave Velocity of 2.5 km/sec ($Z_{2.5}$)	n/a*	n/a*	n/a*

*The site is not located within sedimentary basin as mapped/defined by Caltrans' *Seismic Design Criteria (Appendix B);* therefore, Basin Factors are not applicable.

Site coordinates of 34.47128181°N and -117.2795248°W were used in the analysis. Based on the soil conditions encountered during site exploration, the site is underlain by medium dense to dense alluvial soils and most closely reflects a Caltrans Soil Type D. We calculated an average shear wave velocity in the upper 30 meters (V_{S30}) of approximately 280 meters per second (m/sec) based on the SPT values measured in borings A-14-006 and A-14-007 and the recommended procedures in Appendix A of Caltrans *Methodology for Developing Design Response Spectrum for Use in Seismic Design Recommendations*.

Both the deterministic response spectrum and the probabilistic response spectrum of the site were estimated using Caltrans' *Deterministic Response Spectrum Spreadsheet, Probabilistic Response Spectrum Spreadsheet* (after USGS), *2008 USGS National Seismic Hazard Map,* and the *ARS Online* web tools. Where distances to the controlling faults are less than 25 kilometers, near-field factors were applied in the analysis. The design response spectrum is the upper envelope of the spectral values of the deterministic response spectrum and the probabilistic response spectrum.

Based on our analysis, the probabilistic results control the design response spectrum for the project. The recommended design response spectra is presented as Figure 4.

6.2 Liquefaction and Lateral Spreading

Liquefaction is a phenomenon in which saturated cohesionless soils are subject to a temporary loss of shear strength due to pore pressure buildup under the cyclic shear stresses associated with earthquakes. Primary factors that trigger liquefaction are: moderate to strong ground shaking (seismic source), relatively clean, loose granular soils (primarily poorly graded sands and silty sands), and saturated soil conditions (shallow groundwater). Lateral spreading (lateral deformations) can also occur during liquefaction events.

Based on the lack of groundwater within the upper 200 feet (see Section 5.6), the potential for liquefaction does not appear to be a hazard for the site. Since the potential for liquefaction is likely low, the potential for lateral spreading and other secondary effects, such as seismic-induced settlement, would also be low.

Dynamic compaction of dry and loose sands may occur during a major earthquake. Typically, settlements occur in thick beds of such soils. The soils underlying the site consist predominantly of sand that is generally dense to very dense and well consolidated. Based on these conditions, appreciable dry dynamic settlements are not anticipated.

6.3 Slope Stability

Fill slopes for the roadway approaches to the bridge consist of embankments up to 36 feet high with side slope inclinations at approximately 2:1 (horizontal to vertical). The existing slopes appear to be performing well. No obvious signs of slope instability were observed in the fill slopes; the slopes generally appear to be in good condition.

Proposed embankment fills and cut slopes will be constructed with slope inclinations of 2:1 or flatter. Embankments constructed in accordance with Caltrans requirements should possess adequate factor of safety against slope instability.

7.0 CORROSION

According to Caltrans' *Corrosion Guidelines* (Version 2.0, November 2012), soils are considered corrosive to foundation elements if one or more of the following conditions exist: chloride concentration is 500 parts per million (ppm) or greater, or sulfate concentration is 2,000 ppm or greater, or the potential of hydrogen (pH) is 5.5 or less. Resistivity serves as an indicator parameter for the possible presence of soluble salts and is not included as a parameter to define a corrosive area for structures. A minimum resistivity value for soil and/or water less than 1,000 ohm-centimeters may indicate the presence of high quantities of soluble salts and a higher propensity for corrosion.

Resistivity, pH, chlorides, and sulfates tests were performed on two samples selected at random to generally evaluate the corrosion potential to subsurface structures. These tests were performed in accordance with CTM Nos. 417, 643,and 422. The results are presented in Appendix B and should be considered for design of underground structures.

Proposed improvements in contact with the ground should be designed and constructed in accordance with Caltrans' *Standard Specifications* and good construction practices. Geocon does not practice in the field of corrosion engineering. If corrosion sensitive improvements are planned, it is recommended that further evaluations by a corrosion engineer be performed to incorporate the necessary precautions to avoid premature corrosion on buried metal pipes and concrete structures in direct contact with the soils.

8.0 PAVEMENT

8.1 Existing Pavement Structural Sections

The following as-built plans for were provided by Dokken Engineering: *Bear Valley Cutoff, Apatite Street to Tamarisk Avenue,* 30 sheets, prepared by County of San Bernardino Transportation Department dated July 24, 1979. Copies of the as-built plans are included as Appendix D. Based on the as-built plans, the existing pavement section for Bear Valley Road is reported to consist of 0.4 feet of asphalt-concrete (AC) underlain by 0.8 feet of aggregate base (AB).

The *Bear Valley Road Cutoff Widen General Plan* includes LOTB sheets for four prior borings conducted at the site in 2001. Two of the borings were conducted within the southernmost eastbound lane of Bear Valley Road. Based on the LOTBs for these borings, the existing pavement section encountered consists of 0.37 feet of AC underlain by 0.82 feet of AB, and 0.41 feet of AC underlain by 0.75 feet of AB.

8.2 Visual Pavement Assessment Survey

As a part of the site exploration program a visual pavement assessment survey was conducted to identify areas of distress that should be addressed during construction of the proposed site improvements.

The westbound and eastbound through lanes of Bear Valley Road consist primarily of asphalt-concrete (AC) pavement sections, with the exception of the road lanes within the BNSF overhead structure, which consist of Portland Cement Concrete (PCC) pavement sections. The PCC pavement appears to be in good condition, with no noticeable pavement distress.

Little to no visible pavement distress was observed within the eastbound lanes. Based on the lack of distress and observed apparent cold joints, it is likely that recent pavement overlay was performed to the eastbound lanes. The eastbound lanes appear to be in good condition, with no evidence of structural failure corresponding to the relatively recent pavement overlay of this roadway section. Trenching is visible between Station 18+00 and 19+00.

Pavement distress was observed throughout the westbound lanes. The distress consists primarily of longitudinal, transverse, and fatigue cracking. Pavement rutting was also observed. Transverse cracks are randomly cited throughout the westbound lanes. Longitudinal cracks are observed between Stations 18+00 through 29+00 and Stations 38+00 through 40+00. Longitudinal cracks are predominantly located in the shoulder and middle lanes. Fatigue cracks are present within the shoulder lane at Stations 18+00 and 19+00 and between Stations 24+50 through 27+50, Stations 35+80 through 37+98, and Stations 39+00 through 41+00. Pavement rutting is visible in all westbound lanes between Stations18+00 through 29+00, Stations 34+00 through 36+00, and Stations 40+00 through 41+00. The severity of longitudinal cracking, transverse cracking, and pavement rutting is categorized as low to medium distress within these areas. The fatigue cracking is considered to have a medium to high distress severity.

The pavement distress at the intersection with Industrial Boulevard and including the area approximately 100 feet north of Bear Valley Road consists of transverse cracking and pavement rutting. The severity of pavement distress is between low and medium within this area.

The pavement distress at the intersection with Ridgecrest Road and including the area extending approximately 50 feet north of Bear Valley Road, consists of high severity fatigue cracking and pavement rutting.

8.3 Existing Subgrade Conditions

Borings A-14-001 through A-14-004 were conducted along the shoulder of Bear Valley Road. The borings encountered fill generally consisting of silty sand to sand with silt with varying amounts of gravel. These soils are generally considered to be non-plastic. Based on laboratory testing, Resistance Values (R-Values) of 52 and 53 were obtained from two representative samples. Test results are presented in Appendix B. In accordance with the City of Victorville design standards, a maximum R-Value of 50 will be used for the pavement design.

8.4 New Flexible Pavement Structural Sections

According to the City of Victorville Street Design Standards, the traffic index for Bear Valley Road is 13. A copy of the design standard is included in Appendix E. This report assumes that the designated traffic index corresponds to a 20-year design life.

Table 8.4 provides flexible pavement design sections for a 20-year design lives. The recommended sections were developed in accordance with the Chapter 630 of Caltrans' HDM using the software CalFP (Caltrans, Ver. 1.1, January 2008). Pavement design calculations are provided in Appendix E.

TABLE 8.4
FLEXIBLE PAVEMENT STRUCTURAL SECTIONS
DESIGN R-VALUE = 50

Alignment	Design Life	Traffic Index	RHMA-G[1]	HMA-C[2]	AB[3]
Bear Valley Road	20	13.0	---	0.65'	0.9'
	20	13.0	0.20'	0.55'	0.9'

Notes:

1. RHMA-G = Rubberized Hot Mix Asphalt, Type G (non-structural wearing course, 0.1' is the sacrificial layer and 0.1' is the top of the surface layer which reduces the HMA-C layer by 0.1')
2. HMA-C = Hot Mix Asphalt, Type C
3. AB = Aggregate Base (Class 2)

8.5 Pavement Overlay

Based on the project plans, it is our understanding that it is desired to rehabilitate the existing pavement by milling and placing an HMA overlay throughout the existing roadway. The service life of the overlay is typically governed by the ability to withstand reflective cracking (i.e. cracks from the underlying materials reflecting through the new HMA layer). Prior to placing the overlay, heavily distressed HMA areas should be repaired (dig-outs). When the total area of dig-outs exceed approximately 20% of the rehabilitation area, HMA overlay is usually not considered a cost-effective alternative. Milling (removal) of a portion of the existing HMA is typically performed for edge conforms and to remove brittle, oxidized HMA.

Based on our visual pavement assessment survey (see Section 8.2), the existing pavement within the eastbound lanes appears to be in good, serviceable condition and the westbound lanes exhibit low to medium paving distress.

Pavement coring and deflection testing was not performed as a part of this report. Additional field exploration and testing should be considered during the Plans, Specifications, and Estimates (PS&E) phase of the project. To prepare an estimate of pavement overlay thickness, we referenced the Caltrans document: *Alternative Procedure to Estimate Flexible Pavement Rehabilitation Requirements for Project Scoping*, dated November 1, 2006.

Based on our analysis, pavement rehabilitation using a mill and overlay which maintains existing roadway elevations and achieves a Traffic Index of 13 is not feasible. The required mill depth exceeds the total thickness of the existing paving section. The analysis is provided in Appendix E.

A geosynthetic pavement interlayer may be used with the mill and overlay process to maximize the pavement improvements while maintaining existing roadway elevations. However, a traffic index of 13 will not be achieved. Table 8.5B provides estimates of mill depths and HMA overlay thicknesses based on the desired 0.2-foot mill depth and the use of a geosynthetic pavement interlayer.

TABLE 8.5B
ESTIMATE OF HMA OVERLAY THICKNESS FOR EXISTING PAVEMENT
WITH GEOSYNTHETIC PAVEMENT INTERLAYER
RELIABILITY OF ESTIMATE, ρ USED = 80%

Alignment	Design Life[1]	Traffic Index	Mill Depth	HMA[2]
Bear Valley Road	20	10.0	0.2’	0.2’

Notes:
1. 20-year design life of HMA overlay estimated from HDM Table 625.1. 20-year design life of HMA overlay estimated from *Alternative Procedure to Estimate Flexible Pavement Rehabilitation Requirements for Project Scoping*” dated November 1, 2006 Tables 1 and 2.
2. HMA = Hot Mix Asphalt

Using a paving interlayer (low-strength paving fabric, high-strength paving mats and paving grids) material between the existing HMA and overlay may increase the service life of the overlay, depending on the type of interlayer used. Table 8.5C provides potential overlay service life increase as controlled by the development of reflective cracking.

TABLE 8.5C
INTERLAYER EFFECT ON OVERLAY SERVICE LIFE

Interlayer Type	Potential Overlay Service Life Increase[4]
None	0%
Paving Fabric[1]	50%
Paving Mat[2]	150%
Paving Composite Grid[3]	400%

Notes:

1. Meets Caltrans' Criteria for Paving Fabric (Mirafi MPV500 or Equal)
2. Meets Caltrans' Criteria for Paving Mat (Mirafi TruPave or Equal)
3. Meets Caltrans' Criteria for Paving Composite Grid (Mirafi PGM – G4 or equal)
4. Potential service life increase estimate based PRI Study of Interlayer Effectiveness using APA Crack testing (TenCate Geosynthetics)

8.6 Cold In-Place Recycling

The cold in-place (CIR) process resets the pavement to a new condition by eliminating the pavement distress in the recycling process. CIR can be performed will at high ambient temperatures. Roadway drainage can be improved in the process. Based on our experience, the CIR process can be performed relatively quickly allowing traffic to drive on the roadways shortly after paving. CIR is also recognized as a green technology which eliminates truck trips, materials requirements, and emissions from the project. This cost savings is passed on to the customer by lower transportation and mobilizations costs. The CIR process should be followed be an overlay to provide a smooth wearing surface and provide the design pavement thickness required to achieve the desired traffic index. If the CIR process is selected, Geocon should be retained to provide additional recommendations. The thickness of the CIR process and the overlay will be based on the condition of the existing pavement, the existing pavement thickness, and the design Traffic Index.

9.0 DRAINAGE FACILITIES

Proposed drainage structures are generally planned to be a 36-inch corrugated metal pipe and 10-foot by 4-foot reinforced concrete box culvert. The proposed drainage structures will function as extensions of existing drain lines.

The installation of the proposed drainage systems will require excavation. The bottom of trench excavation should be observed by the Geotechnical Engineer of Record prior to pipe installation. The culvert and drainpipe extension should be designed to withstand the overburden pressures and surcharges. Excavation, backfill and culvert bedding shall conform to the provisions in Section 19-3 of the Caltrans Standard Specifications or equivalent, except at locations where pipe is to be backfilled with concrete. Backfill should have an Expansion Index (EI) no greater than 50 and a Sand Equivalent of 20 or greater. Ponding or jetting of backfill should not be permitted.

10.0 EARTHWORK

10.1 Cuts and Excavations

Based on the currently available project plans, the roadway improvements will require cut slopes on the order of 8 to 21 feet in height along the north side of Bear Valley Road between Sta. 37+00 and Sta. 41+00. Excavation for the construction of the bridge foundations is also anticipated; however, the necessary depth of excavation will be evaluated in the Final Foundation Report.

Cuts and excavations should be stable at inclinations of 2:1 or flatter. Based on the subsurface conditions encountered during field explorations, excavations at the site can likely be performed using conventional heavy-duty grading and excavation equipment.

10.2 Embankments/Fill Slopes

Based on the information provided by Dokken Engineering, the existing fill embankments will be widened to accommodate the proposed bridge and roadway widening and improvements.

From a geotechnical perspective, embankments and fill slopes may be constructed at inclinations of 2:1 or flatter. Steeper slopes may be possible if soil reinforcement, engineered buttresses, or surface treatments are used. Such embankment slopes should be evaluated during the project design phase.

Based on the field explorations and experience in the area, soil generated from onsite and local excavations are likely suitable for use as embankment and general fill. However, some screening and selection may be required depending on excavation location and intended use. For example, select, low-expansive soil may be required within specific portions of the bridge approach embankments and near the abutments. All grading should be performed in conformance with Sections 6-3, 19-3, 19-5, and 19-6 of Caltrans' *Standard Specifications* or equivalent.

11.0 MATERIAL SOURCES

This study did not include the evaluation of potential sources of import materials.

12.0 LIMITATIONS AND UNIFORMITY OF CONDITIONS

The recommendations of this report pertain only to the site investigated and are based upon the assumption that the soil conditions do not deviate from those disclosed in the investigation. If any variations or undesirable conditions are encountered during construction, or if the proposed construction will differ from that anticipated herein, we should be notified so that supplemental recommendations can be given. The evaluation or identification of the potential presence of hazardous materials or environmental contamination was not part of our scope of services.

This report is issued with the understanding that it is the responsibility of the owner or their representative to ensure that the information and recommendations contained herein are brought to the attention of the design team for the project and incorporated into the plans and specifications and the necessary steps are taken to see that the Contractor and subcontractors carry out such recommendations in the field.

The recommendations contained in this report are preliminary until verified during construction by representatives of our firm. Changes in the conditions of a property can occur with the passage of time, whether they are due to natural processes or the works of man on this or adjacent properties. Additionally, changes in applicable or appropriate standards may occur, whether they result from legislation or the broadening of knowledge. Accordingly, the findings of this report may be invalidated partially or wholly by changes outside our control. Therefore, this report is subject to review and should not be relied upon after a period of three years.

Our professional services were performed, our findings obtained, and our recommendations prepared in accordance with generally accepted geotechnical engineering principles and practices used in the site area at this time. No warranty is provided, express or implied.

13.0 REFERENCES

1. California Department of Transportation, 2014, *ARS Online Version 2.3.06* http://dap3.dot.ca.gov/ARS_Online/ , accessed January 2014.

2. California Department of Transportation, *Corrosion Guidelines, Version 2.0*, November 2012.

3. California Department of Transportation, *Geotechnical Manual*, 2012.

4. California Department of Transportation, *Guidelines for Preparing Geotechnical Design Reports*, April, 2013.

5. California Department of Transportation, *Highway Design Manual*, 2014.

6. California Department of Transportation, 2013, *Seismic Design Criteria, Version 1.7.*

7. California Department of Transportation, *Soil and Rock Logging, Classification, and Presentation Manual*, 2010.

8. California Department of Water Resources water data library, http://www.water.ca.gov/waterdatalibrary/

9. County of San Bernardino Department of Transportation, [As-Built] Plans for Construction on Bear Valley Cutoff, *Apatite Street to Tamarisk Avenue*, July 24, 1979, 30 sheets.

10. Dokken Engineering, *Bear Valley Road Overhead General Plan, Sheets 1 and 2*, March 2012.

11. Dokken Engineering, *City of Victorville Street Improvements Plans for Bear Valley Road Overhead at BNSF Railroad, 35% Project Plans, Sheets 1 through 1*, undated.

12. Lim & Nascimento Engineering, Bear Valley Cutoff Widen General Plan, Sheets 1 through 21, dated March 3, 2003.

13. USGS, *2008 Interactive Deaggregations*, http://geohazards.usgs.gov/deaggint/2008/.

14. Unpublished reports, aerial photographs, and maps on file with Geocon.

15. Western Regional Climate Center, http://www.wrcc.dri.edu/, accessed January 2015.

APPENDIX A

APPENDIX A

FIELD INVESTIGATION

The field investigation for this project was performed between November 18 and 20, 2014, and consisted of a site reconnaissance and drilling eight borings. The boring locations were based on project plans and information from Dokken Engineering. Table A-1 summarizes the exploration locations, approximate surface elevations, and depths. The approximate boring locations are shown on the Site Plan, Figure 2.

TABLE A-1
SUMMARY OF EXPLORATIONS

Exploration No.	Approximate Exploration Location				Exploration Depth (feet)
	Station No.	Line	Offset (feet)	Elevation (feet)	
A-14-001	26+64	B.V. Rd CL	46.5L	2994	50.5
A-14-002	22+03	B.V. Rd CL	48.5R	2990	20.5
A-14-003	33+30	B.V. Rd CL	47.5L	2984	40.5
A-14-004	35+24	B.V. Rd CL	62.5R	2978	35.5
A-14-005	29+38	B.V. Rd CL	69.5R	2964	50.5
A-14-006	29+24	B.V. Rd CL	74.5L	2962	50.5
A-14-007	29+92	B.V. Rd CL	70R	2964	50.5
A-14-008	29+78	B.V. Rd CL	74.5L	2961	50.5

Borings A-14-001, -003, and -004 were drilled using a track-mounted CME-75 drill rig equipped with an 8-inch diameter, hollow-stem augers; boring A-14-002 was drilled with hand auger equipment; and borings A-14-005 through A-14-008 were drilled using truck-mounted CME-75 drill rig equipped with 8-inch diameter, hollow-stem augers. Borings were advanced to depths ranging from approximately 20½ to 50½ feet.

Sampling during drilling was performed in general accordance with the current Caltrans' *Soil and Rock Logging, Classification and Presentation Manual* (2010). Soil samples were typically collected at approximately 2.5- to 5-foot intervals. Relatively undisturbed soil samples were obtained by driving an approximately 3-inch outside-diameter (OD) split-spoon sampler (California modified sampler) into the "undisturbed" soil mass with blows from a 140-pound hammer falling 30 inches. The sampler was equipped with 1-inch-long by 2.5-inch-diameter brass rings to facilitate sample removal and laboratory testing. Standard Penetration Tests (SPTs) were performed by driving a 2-inch OD split-spoon sampler 18 inches in general accordance with American Society for Testing and Materials (ASTM) D-1586. The number of blows required to drive the samplers (blow counts) the 18-inch sample drive (or portion thereof) are reported on the boring logs and Logs of Test Boring (LOTB) sheets included in Appendices A and C, respectively. Bulk samples of soil

cuttings were also collected during the field exploration. In addition, a pocket penetrometer was used in the field to determine the consistency of cohesive soil.

The exploratory borings were sampled and logged by a staff engineer during the drilling operations. The soils encountered in the exploratory borings were classified in accordance with the Caltrans' *Soil and Rock Logging, Classification, and Presentation Manual* (2010). Upon completion of the field exploration program, the exploratory borings were backfilled with soil cuttings.

All samples were sealed in containers and transported to our laboratory for testing and further classification.. The Log of Test Borings (LOTB) sheets in Caltrans format are presented in Appendix C.

GROUP SYMBOLS AND NAMES

Graphic / Symbol	Group Names
GW	Well-graded GRAVEL Well-graded GRAVEL with SAND
GP	Poorly graded GRAVEL Poorly graded GRAVEL with SAND
GW-GM	Well-graded GRAVEL with SILT Well-graded GRAVEL with SILT and SAND
GW-GC	Well-graded GRAVEL with CLAY (or SILTY CLAY) Well-graded GRAVEL with CLAY and SAND (or SILTY CLAY and SAND)
GP-GM	Poorly graded GRAVEL with SILT Poorly graded GRAVEL with SILT and SAND
GP-GC	Poorly graded GRAVEL with CLAY (or SILTY CLAY) Poorly graded GRAVEL with CLAY and SAND (or SILTY CLAY and SAND)
GM	SILTY GRAVEL SILTY GRAVEL with SAND
GC	CLAYEY GRAVEL CLAYEY GRAVEL with SAND
GC-GM	SILTY, CLAYEY GRAVEL SILTY, CLAYEY GRAVEL with SAND
SW	Well-graded SAND Well-graded SAND with GRAVEL
SP	Poorly graded SAND Poorly graded SAND with GRAVEL
SW-SM	Well-graded SAND with SILT Well-graded SAND with SILT and GRAVEL
SW-SC	Well-graded SAND with CLAY (or SILTY CLAY) Well-graded SAND with CLAY and GRAVEL (or SILTY CLAY and GRAVEL)
SP-SM	Poorly graded SAND with SILT Poorly graded SAND with SILT and GRAVEL
SP-SC	Poorly graded SAND with CLAY (or SILTY CLAY) Poorly graded SAND with CLAY and GRAVEL (or SILTY CLAY and GRAVEL)
SM	SILTY SAND SILTY SAND with GRAVEL
SC	CLAYEY SAND CLAYEY SAND with GRAVEL
SC-SM	SILTY, CLAYEY SAND SILTY, CLAYEY SAND with GRAVEL
PT	PEAT
	COBBLES COBBLES and BOULDERS BOULDERS

Graphic / Symbol	Group Names
CL	Lean CLAY Lean CLAY with SAND Lean CLAY with GRAVEL SANDY lean CLAY SANDY lean CLAY with GRAVEL GRAVELLY lean CLAY GRAVELLY lean CLAY with SAND
CL-ML	SILTY CLAY SILTY CLAY with SAND SILTY CLAY with GRAVEL SANDY SILTY CLAY SANDY SILTY CLAY with GRAVEL GRAVELLY SILTY CLAY GRAVELLY SILTY CLAY with SAND
ML	SILT SILT with SAND SILT with GRAVEL SANDY SILT SANDY SILT with GRAVEL GRAVELLY SILT GRAVELLY SILT with SAND
OL	ORGANIC lean CLAY ORGANIC lean CLAY with SAND ORGANIC lean CLAY with GRAVEL SANDY ORGANIC lean CLAY SANDY ORGANIC lean CLAY with GRAVEL GRAVELLY ORGANIC lean CLAY GRAVELLY ORGANIC lean CLAY with SAND
OL	ORGANIC SILT ORGANIC SILT with SAND ORGANIC SILT with GRAVEL SANDY ORGANIC SILT SANDY ORGANIC SILT with GRAVEL GRAVELLY ORGANIC SILT GRAVELLY ORGANIC SILT with SAND
CH	Fat CLAY Fat CLAY with SAND Fat CLAY with GRAVEL SANDY fat CLAY SANDY fat CLAY with GRAVEL GRAVELLY fat CLAY GRAVELLY fat CLAY with SAND
MH	Elastic SILT Elastic SILT with SAND Elastic SILT with GRAVEL SANDY elastic SILT SANDY elastic SILT with GRAVEL GRAVELLY elastic SILT GRAVELLY elastic SILT with SAND
OH	ORGANIC fat CLAY ORGANIC fat CLAY with SAND ORGANIC fat CLAY with GRAVEL SANDY ORGANIC fat CLAY SANDY ORGANIC fat CLAY with GRAVEL GRAVELLY ORGANIC fat CLAY GRAVELLY ORGANIC fat CLAY with SAND
OH	ORGANIC elastic SILT ORGANIC elastic SILT with SAND ORGANIC elastic SILT with GRAVEL SANDY elastic ELASTIC SILT SANDY ORGANIC elastic SILT with GRAVEL GRAVELLY ORGANIC elastic SILT GRAVELLY ORGANIC elastic SILT with SAND
OL/OH	ORGANIC SOIL ORGANIC SOIL with SAND ORGANIC SOIL with GRAVEL SANDY ORGANIC SOIL SANDY ORGANIC SOIL with GRAVEL GRAVELLY ORGANIC SOIL GRAVELLY ORGANIC SOIL with SAND

FIELD AND LABORATORY TESTS

C	Consolidation (ASTM D 2435-04)
CL	Collapse Potential (ASTM D 5333-03)
CP	Compaction Curve (CTM 216 - 06)
CR	Corrosion, Sulfates, Chlorides (CTM 643 - 99; CTM 417 - 06; CTM 422 - 06)
CU	Consolidated Undrained Triaxial (ASTM D 4767-02)
DS	Direct Shear (ASTM D 3080-04)
EI	Expansion Index (ASTM D 4829-03)
M	Moisture Content (ASTM D 2216-05)
OC	Organic Content (ASTM D 2974-07)
P	Permeability (CTM 220 - 05)
PA	Particle Size Analysis (ASTM D 422-63 [2002])
PI	Liquid Limit, Plastic Limit, Plasticity Index (AASHTO T 89-02, AASHTO T 90-00)
PL	Point Load Index (ASTM D 5731-05)
PM	Pressure Meter
PP	Pocket Penetrometer
R	R-Value (CTM 301 - 00)
SE	Sand Equivalent (CTM 217 - 99)
SG	Specific Gravity (AASHTO T 100-06)
SL	Shrinkage Limit (ASTM D 427-04)
SW	Swell Potential (ASTM D 4546-03)
TV	Pocket Torvane
UC	Unconfined Compression - Soil (ASTM D 2166-06) Unconfined Compression - Rock (ASTM D 2938-95)
UU	Unconsolidated Undrained Triaxial (ASTM D 2850-03)
UW	Unit Weight (ASTM D 4767-04)
VS	Vane Shear (AASHTO T 223-96 [2004])

SAMPLER GRAPHIC SYMBOLS

- Standard Penetration Test (SPT)
- Standard California Sampler
- Modified California Sampler
- Shelby Tube
- Piston Sampler
- NX Rock Core
- HQ Rock Core
- Bulk Sample
- Other (see remarks)

DRILLING METHOD SYMBOLS

- Auger Drilling
- Rotary Drilling
- Dynamic Cone or Hand Driven
- Diamond Core

WATER LEVEL SYMBOLS

- First Water Level Reading (during drilling)
- Static Water Level Reading (short-term)
- Static Water Level Reading (long-term)

GEOCON WEST, INC.
Geocon West, Inc.
Environmental Geotechnical Materials
3303 N. San Fernando Blvd. - Suite 100
Burbank, CA 91504

BORING LOG LEGEND

Bear Valley Road overhead at BNSF Railroad

Date	Geocon Project No.	SHEET
JAN 2017	A9072-06-01	1 of 2

CONSISTENCY OF COHESIVE SOILS

Descriptor	Unconfined Compressive Strength (tsf)	Pocket Penetrometer (tsf)	Torvane (tsf)	Field Approximation
Very Soft	< 0.25	< 0.25	< 0.12	Easily penetrated several inches by fist
Soft	0.25 - 0.50	0.25 - 0.50	0.12 - 0.25	Easily penetrated several inches by thumb
Medium Stiff	0.50 - 1.0	0.50 - 1.0	0.25 - 0.50	Can be penetrated several inches by thumb with moderate effort
Stiff	1.0 - 2.0	1.0 - 2.0	0.50 - 1.0	Readily indented by thumb but penetrated only with great effort
Very Stiff	2.0 - 4.0	2.0 - 4.0	1.0 - 2.0	Readily indented by thumbnail
Hard	> 4.0	> 4.0	> 2.0	Indented by thumbnail with difficulty

APPARENT DENSITY OF COHESIONLESS SOILS

Descriptor	SPT N_{60} - Value (blows / foot)
Very Loose	0 - 4
Loose	5 - 10
Medium Dense	11 - 30
Dense	31 - 50
Very Dense	> 50

MOISTURE

Descriptor	Criteria
Dry	Absence of moisture, dusty, dry to the touch
Moist	Damp but no visible water
Wet	Visible free water, usually soil is below water table

PERCENT OR PROPORTION OF SOILS

Descriptor	Criteria
Trace	Particles are present but estimated to be less than 5%
Few	5 to 10%
Little	15 to 25%
Some	30 to 45%
Mostly	50 to 100%

SOIL PARTICLE SIZE

Descriptor		Size
Boulder		> 12 inches
Cobble		3 to 12 inches
Gravel	Coarse	3/4 inch to 3 inches
	Fine	No. 4 Sieve to 3/4 inch
Sand	Coarse	No. 10 Sieve to No. 4 Sieve
	Medium	No. 40 Sieve to No. 10 Sieve
	Fine	No. 200 Sieve to No. 40 Sieve
Silt and Clay		Passing No. 200 Sieve

PLASTICITY OF FINE-GRAINED SOILS

Descriptor	Criteria
Nonplastic	A 1/8-inch thread cannot be rolled at any water content.
Low	The thread can barely be rolled, and the lump cannot be formed when drier than the plastic limit.
Medium	The thread is easy to roll, and not much time is required to reach the plastic limit; it cannot be rerolled after reaching the plastic limit. The lump crumbles when drier than the plastic limit.
High	It takes considerable time rolling and kneading to reach the plastic limit. The thread can be rerolled several times after reaching the plastic limit. The lump can be formed without crumbling when drier than the plastic limit.

CEMENTATION

Descriptor	Criteria
Weak	Crumbles or breaks with handling or little finger pressure.
Moderate	Crumbles or breaks with considerable finger pressure.
Strong	Will not crumble or break with finger pressure.

NOTE: This legend sheet provides descriptors and associated criteria for required soil description components only. Refer to Caltrans Soil and Rock Logging, Classification, and Presentation Manual (July 2007), Section 2, for tables of additional soil description components and discussion of soil description and identification.

LOGGED BY	BEGIN DATE	COMPLETION DATE	BOREHOLE LOCATION (Lat/Long or North/East and Datum)	HOLE ID
RP	11-20-14	11-20-14		A-14-001
DRILLING CONTRACTOR			BOREHOLE LOCATION (Offset, Station, Line)	SURFACE ELEVATION
Cascade			46.50' Lt Sta 26+64 Bear Valley Rd. CL	2994.0 ft
DRILLING METHOD			DRILL RIG	BOREHOLE DIAMETER
Hollow-Stem Auger			CME 75 Track	8 in
SAMPLER TYPE(S) AND SIZE(S) (ID)			SPT HAMMER TYPE	HAMMER EFFICIENCY, ERi
Bulk, Std Cal (2.5")			Automatic 140 lb 30" drop	68%
BOREHOLE BACKFILL AND COMPLETION			GROUNDWATER READINGS DURING DRILLING AFTER DRILLING (DATE)	TOTAL DEPTH OF BORING
Soil Cuttings			No Groundwater Encountered	50.5 ft

ELEVATION (ft)	DEPTH (ft)	DESCRIPTION	Sample Location	Sample Number	Blows per 6 in.	Blows per foot	Recovery (%)	RQD (%)	Moisture Content (%)	Dry Unit Weight (pcf)	Shear Strength (tsf)	Drilling Method	Casing Depth	Remarks
	0	Well-graded SAND with SILT (SW-SM); medium dense; brown; dry to moist; trace fine GRAVEL [FILL].												
	1													
2992.00	2													
	3													
2990.00	4	SILTY SAND (SM); medium dense; reddish brown; moist; trace coarse GRAVEL; mostly fine to medium with trace coarse SAND [FILL].			13 16 16	32	100		5.4	107.2				
	5			5			100							PA
2988.00	6													
	7			Bulk										
2986.00	8													
	9	NO RECOVERY.			19 28 28	56	100							
2984.00	10													
	11													
2982.00	12													
	13													
2980.00	14	Mostly fine to medium SAND; decrease in SILT content.			10 14 17	31	100		4.1	98.2				
	15			15										DS, C
2978.00	16													
	17													
2976.00	18													
	19	Loose; trace fine GRAVEL; mostly medium SAND.			8 12 14	26	100		5.1	110.4				
2974.00	20			20										
	21													
2972.00	22													
	23													
2970.00	24	Medium dense; little fine GRAVEL; decrease in SILT content.				30	100		4.0	109.0				
	25													

(continued)

GEOCON WEST, INC.
Geocon West, Inc.
3303 North San Fernando Blvd, Suite 100
Burbank CA 91504
Telephone: 818-841-8388
Fax: 818-841-1704

PROJECT OR BRIDGE NAME
Bear Valley Road overhead at BNSF Railroad

PROJECT NO.
A90720601

DATE

HOLE ID
A-14-001

GEOCON WEST 5BR-STANDARD A9072-06-01 BEAR VALLEY ROAD BORINGS.GPJ CALTRANS LIBRARY DEC09-UNLOCK 2.GLB 2/16/15

ELEVATION (ft)	DEPTH (ft)	Material Graphics	DESCRIPTION	Sample Location	Sample Number	Blows per 6 in.	Blows per foot	Recovery (%)	RQD (%)	Moisture Content (%)	Dry Unit Weight (pcf)	Shear Strength (tsf)	Drilling Method	Casing Depth	Remarks
	25		SILTY SAND (SM) *(continued)*.		25	10 12 18					109.0				C
2968.00	26														
	27														
2966.00	28														
	29		Increase in SILT content.			13 17 22	39	100		9.1	120.4				
2964.00	30				30										
	31														
2962.00	32														
	33														
2960.00	34					6 8 10	18	100		2.8	118.3				
	35		Loose; strong brown; mostly fine to medium SAND.		35										C
2958.00	36														
	37														
2956.00	38														
	39		Poorly graded SAND (SP); medium dense; strong brown; moist; mostly fine to medium SAND [ALLUVIUM].			10 18 18	36	100		4.3	117.4				
2954.00	40				40										
	41														
2952.00	42														
	43														
2950.00	44		Dense; mottled pale brown and reddish brown.			27 50 50 for 6"		100		3.2	107.8				
	45				45										
2948.00	46														
	47														
2946.00	48														
	49					32 37 50 for 6"		100		1.3	107.9				
2944.00	50				50										
	51		Bottom of borehole at 50.5 ft bgs												
2942.00	52		Borehole terminated at planned depth.												
	53		This Boring Record was developed in accordance with the Caltrans Soil & Rock Logging, Classification, and Presentation Manual (2010) except as noted on the Soil or Rock Legend or below.												
2940.00	54														
	55														

GEOCON WEST, INC.

Geocon West, Inc.
3303 North San Fernando Blvd, Suite 100
Burbank CA 91504
Telephone: 818-841-8388
Fax: 818-841-1704

PROJECT OR BRIDGE NAME
Bear Valley Road overhead at BNSF Railroad

PROJECT NO.
A90720601

DATE

HOLE ID
A-14-001

SHEET
2 of 2

GEOCON WEST 5BR-STANDARD A9072-06-01 BEAR VALLEY ROAD BORINGS.GPJ CALTRANS LIBRARY DEC09-UNLOCK 2.GLB 2/16/15

LOGGED BY	BEGIN DATE	COMPLETION DATE	BOREHOLE LOCATION (Lat/Long or North/East and Datum)	HOLE ID
RA	11-20-14	11-20-14		A-14-002
DRILLING CONTRACTOR			BOREHOLE LOCATION (Offset, Station, Line)	SURFACE ELEVATION
Geocon			48.50' Rt Sta 22+03 Bear Valley Rd. C	2290.0 ft
DRILLING METHOD			DRILL RIG	BOREHOLE DIAMETER
Hand Auger			N/A	4 in
SAMPLER TYPE(S) AND SIZE(S) (ID)			SPT HAMMER TYPE	HAMMER EFFICIENCY, ERi
Bulk, Std Cal (2.5")			Slide Hammer	N/A
BOREHOLE BACKFILL AND COMPLETION			GROUNDWATER READINGS DURING DRILLING AFTER DRILLING (DATE)	TOTAL DEPTH OF BORING
Soil Cuttings			No Groundwater Encountered	20.5 ft

ELEVATION (ft)	DEPTH (ft)	DESCRIPTION	Sample Location	Sample Number	Blows per 6 in.	Blows per foot	Recovery (%)	RQD (%)	Moisture Content (%)	Dry Unit Weight (pcf)	Shear Strength (tsf)	Drilling Method	Casing Depth	Remarks
	0	Poorly graded SAND with SILT (SP-SM); loose; pale brown; dry; some GRAVEL; mostly fine to medium with some coarse SAND [FILL].					100							CP, EI, R
	1													
2288.00	2	Pale brown to reddish brown; moist; increase in SILT content.												
	3	Some SILT pods.												
2286.00	4													
	5	Brown to reddish brown; moist; mostly fine to medium with trace coarse SAND.		5			100		7.5	106.6				C
2284.00	6	Trace concrete fragments.												
	7													
2282.00	8	Increse in SILT pods.												
	9	Trace coarse GRAVEL.												
2280.00	10			10			100		6.0	102.6				C
	11													
2278.00	12	Decrease in SILT content.												
	13	Increase in SILT content.												
2276.00	14	Poorly graded SAND (SP); medium dense; pale brown; moist; some GRAVEL; mostly fine to medium with some coarse SAND; trace SILT [ALLUVIUM].												
	15			15			100		3.4	97.5				C
2274.00	16	Trace GRAVEL.												
	17													
2272.00	18	Some SILT.												
	19	Some GRAVEL; trace SILT.												
2270.00	20			20			100		3.9	102.1				
	21	Bottom of borehole at 20.5 ft bgs												
2268.00	22	Borehole terminated at planned depth.												
	23	This Boring Record was developed in accordance with the Caltrans Soil & Rock Logging, Classification, and Presentation Manual (2010) except as noted on the Soil or Rock Legend or below.												
2266.00	24													
	25													

GEOCON WEST, INC.

Geocon West, Inc.
3303 North San Fernando Blvd, Suite 100
Burbank CA 91504
Telephone: 818-841-8388
Fax: 818-841-1704

PROJECT OR BRIDGE NAME
Bear Valley Road overhead at BNSF Railroad

PROJECT NO.
A90720601

DATE

HOLE ID
A-14-002

SHEET
1 of 1

GEOCON WEST 5BR-STANDARD A9072-06-01 BEAR VALLEY ROAD BORINGS.GPJ CALTRANS LIBRARY DEC09-UNLOCK 2.GLB 2/16/15

LOGGED BY	BEGIN DATE	COMPLETION DATE	BOREHOLE LOCATION (Lat/Long or North/East and Datum)	HOLE ID
RP	11-20-14	11-20-14		A-14-003
DRILLING CONTRACTOR			BOREHOLE LOCATION (Offset, Station, Line)	SURFACE ELEVATION
Cascade			47.50' Lt Sta 33+03 Bear Valley Rd. C	2984.0 ft
DRILLING METHOD			DRILL RIG	BOREHOLE DIAMETER
Hollow-Stem Auger			CME 75 Track	8 in
SAMPLER TYPE(S) AND SIZE(S) (ID)			SPT HAMMER TYPE	HAMMER EFFICIENCY, ERi
Bulk, Std Cal (2.5")			Automatic 140 lb 30" drop	68%
BOREHOLE BACKFILL AND COMPLETION			GROUNDWATER READINGS DURING DRILLING AFTER DRILLING (DATE)	TOTAL DEPTH OF BORING
Soil Cuttings			No Groundwater Encountered	40.5 ft

ELEVATION (ft)	DEPTH (ft)	Material Graphics	DESCRIPTION	Sample Location	Sample Number	Blows per 6 in.	Blows per foot	Recovery (%)	RQD (%)	Moisture Content (%)	Dry Unit Weight (pcf)	Shear Strength (tsf)	Drilling Method	Casing Depth	Remarks
	0		SILTY SAND (SM); loose; brown; dry to moist; trace fine GRAVEL; mostly medium to coarse SAND [FILL].		Bulk			100							CP, EI, R
	1														
2982.00	2		Poorly graded SAND (SP); loose; reddish brown; moist; trace fine GRAVEL; mostly fine to medium with trace coarse SAND; trace SILT [FILL].			10	26	100		3.8	103.6				
	3				3	13 13									DS
2980.00	4														
	5					11	27	100		4.4	108.3				
2978.00	6				6	13 14									C
	7														
2976.00	8		Medium dense; mostly fine to medium SAND; no SILT.			15	43	100		8.2	120.0				
	9				9	16 27									
2974.00	10														
	11		Loose; reddish brown; trace fine GRAVEL; mostly fine SAND; trace SILT.			9	21	100		7.1	109.5				
2972.00	12				12	10 11									C
	13														
2970.00	14														
	15		SILTY SAND (SM); medium dense; white; moist; trace fine GRAVEL; low plasticity fines; mostly medium SAND [FILL].			8	23	100 100		11.3	116.3				PI, PA
2968.00	16				16	11 12						PP = > 4.5			
	17				Bulk										
2966.00	18														
	19		Poorly graded SAND (SP); medium dense; reddish brown; moist; mostly fine to medium with trace coarse SAND [FILL].			14	41	100		6.2	122.7				
2964.00	20				20	24 17									C
	21														
2962.00	22														
	23														
2960.00	24		Poorly graded SAND (SP); loose; mottled reddish brown and olive brown; mostly fine to medium with trace coarse				18	100		6.5	115.7				
	25														

(continued)

GEOCON WEST, INC.
Geocon West, Inc.
3303 North San Fernando Blvd, Suite 100
Burbank CA 91504
Telephone: 818-841-8388
Fax: 818-841-1704

PROJECT OR BRIDGE NAME
Bear Valley Road overhead at BNSF Railroad

PROJECT NO.
A90720601

DATE

HOLE ID
A-14-003

GEOCON WEST 5BR-STANDARD A9072-06-01 BEAR VALLEY ROAD BORINGS.GPJ CALTRANS LIBRARY DEC09-UNLOCK 2.GLB 2/16/15

ELEVATION (ft)	DEPTH (ft)	Material Graphics	DESCRIPTION	Sample Location	Sample Number	Blows per 6 in.	Blows per foot	Recovery (%)	RQD (%)	Moisture Content (%)	Dry Unit Weight (pcf)	Shear Strength (tsf)	Drilling Method	Casing Depth	Remarks
	25		SAND [ALLUVIUM].		25	9					115.7				
2958.00	26		Poorly graded SAND (SP) *(continued)*.			8 10									
	27														
2956.00	28														
	29		Reddish brown; mostly fine with some medium SAND.			9	17	100		5.6	115.2				
2954.00	30				30	8 9									
	31														
2952.00	32														
	33														
2950.00	34		Medium dense; pale brown; mostly fine SAND.			13	55	100		3.8	102.0				
	35				35	19 36									
2948.00	36														
	37														
2946.00	38														
	39					50 for 4"		17		2.0	98.4				
2944.00	40		Dense.		40										
	41		Bottom of borehole at 40.5 ft bgs												
2942.00	42		Borehole terminated at planned depth.												
	43		This Boring Record was developed in accordance with the Caltrans Soil & Rock Logging, Classification, and Presentation Manual (2010) except as noted on the Soil or Rock Legend or below.												
2940.00	44														
	45														
2938.00	46														
	47														
2936.00	48														
	49														
2934.00	50														
	51														
2932.00	52														
	53														
2930.00	54														
	55														

GEOCON WEST 5BR-STANDARD A9072-06-01 BEAR VALLEY ROAD BORINGS.GPJ CALTRANS LIBRARY DEC09-UNLOCK 2.GLB 2/16/15

GEOCON WEST, INC.

Geocon West, Inc.
3303 North San Fernando Blvd, Suite 100
Burbank CA 91504
Telephone: 818-841-8388
Fax: 818-841-1704

PROJECT OR BRIDGE NAME
Bear Valley Road overhead at BNSF Railroad

PROJECT NO.
A90720601

DATE

HOLE ID
A-14-003

SHEET
2 of 2

LOGGED BY	BEGIN DATE	COMPLETION DATE	BOREHOLE LOCATION (Lat/Long or North/East and Datum)	HOLE ID
RP	11-20-14	11-20-14		A-14-004
DRILLING CONTRACTOR			BOREHOLE LOCATION (Offset, Station, Line)	SURFACE ELEVATION
Cascade			62.50' Rt Sta 35+24 Bear Valley Rd. C	2978.0 ft
DRILLING METHOD			DRILL RIG	BOREHOLE DIAMETER
Hollow-Stem Auger			CME 75 Track	8 in
SAMPLER TYPE(S) AND SIZE(S) (ID)			SPT HAMMER TYPE	HAMMER EFFICIENCY, ERi
Bulk, Std Cal (2.5")			Automatic 140 lb 30" drop	68%
BOREHOLE BACKFILL AND COMPLETION			GROUNDWATER READINGS DURING DRILLING AFTER DRILLING (DATE)	TOTAL DEPTH OF BORING
Soil Cuttings			No Groundwater Encountered	35.5 ft

ELEVATION (ft)	DEPTH (ft)	DESCRIPTION	Sample Location	Sample Number	Blows per 6 in.	Blows per foot	Recovery (%)	RQD (%)	Moisture Content (%)	Dry Unit Weight (pcf)	Shear Strength (tsf)	Drilling Method	Casing Depth	Remarks
	0	AGGREGATE BASE.		Bulk			100							
	1	SILTY SAND (SM); loose; brown; dry to moist; trace fine GRAVEL; mostly fine with some medium to coarse SAND [FILL].												
2976.00	2													
	3	Poorly graded SAND (SP); loose; reddish brown; moist; mostly fine with some coarse SAND [FILL].			10	25	100		3.6	108.9				
2974.00	4			4	11 14		100							
	5			Bulk										
2972.00	6	Trace fine GRAVEL.			10	27	100		4.6	107.1				
	7			7	11 16									
2970.00	8													
	9	Medium dense.			11	31	100		6.1	112.6				
2968.00	10			10	17 14									
	11													
2966.00	12													
	13													
2964.00	14	SILTY SAND (SM); loose; brown to olive brown; mostly fine to medium SAND [FILL].			7	16	100		4.6	115.1				
	15			15	7 9									
2962.00	16													
	17													
2960.00	18													
	19				4	15	100		4.8	109.4				
2958.00	20			20	5 10									
	21													
2956.00	22													
	23													
2954.00	24	Poorly graded SAND (SP); loose; reddish brown; moist; trace fine GRAVEL; mostly fine with some medium and				22	100		5.7	106.4				
	25													

(continued)

GEOCON WEST, INC.
Geocon West, Inc.
3303 North San Fernando Blvd, Suite 100
Burbank CA 91504
Telephone: 818-841-8388
Fax: 818-841-1704

PROJECT OR BRIDGE NAME
Bear Valley Road overhead at BNSF Railroad

PROJECT NO.
A90720601

DATE

HOLE ID
A-14-004

GEOCON WEST 5BR-STANDARD A9072-06-01 BEAR VALLEY ROAD BORINGS.GPJ CALTRANS LIBRARY DEC09-UNLOCK 2.GLB 2/16/15

ELEVATION (ft)	DEPTH (ft)	Material Graphics	DESCRIPTION	Sample Location	Sample Number	Blows per 6 in.	Blows per foot	Recovery (%)	RQD (%)	Moisture Content (%)	Dry Unit Weight (pcf)	Shear Strength (tsf)	Drilling Method	Casing Depth	Remarks
	25		trace coarse SAND [ALLUVIUM]. Poorly graded SAND (SP) *(continued)*.		25	6 8 14					106.4				
2952.00	26														
	27														
2950.00	28														
	29		Medium dense; reddish brown to pale brown; trace fine GRAVEL; mostly fine to medium SAND; trace SILT.			15 20 28	48	100		4.4	104.7				
2948.00	30				30										
	31														
2946.00	32														
	33														
2944.00	34					17 21 28	49	100		0.9	103.8				
	35				35										
2942.00	36		Bottom of borehole at 35.5 ft bgs												
	37		Borehole terminated at planned depth.												
2940.00	38		This Boring Record was developed in accordance with the Caltrans Soil & Rock Logging, Classification, and Presentation Manual (2010) except as noted on the Soil or Rock Legend or below.												
	39														
2938.00	40														
	41														
2936.00	42														
	43														
2934.00	44														
	45														
2932.00	46														
	47														
2930.00	48														
	49														
2928.00	50														
	51														
2926.00	52														
	53														
2924.00	54														
	55														

GEOCON WEST 5BR-STANDARD A9072-06-01 BEAR VALLEY ROAD BORINGS.GPJ CALTRANS LIBRARY DEC09-UNLOCK 2.GLB 2/16/15

GEOCON WEST, INC.

Geocon West, Inc.
3303 North San Fernando Blvd, Suite 100
Burbank CA 91504
Telephone: 818-841-8388
Fax: 818-841-1704

PROJECT OR BRIDGE NAME
Bear Valley Road overhead at BNSF Railroad

PROJECT NO.
A90720601

DATE

HOLE ID
A-14-004

SHEET
2 of 2

LOGGED BY	BEGIN DATE	COMPLETION DATE	BOREHOLE LOCATION (Lat/Long or North/East and Datum)	HOLE ID
RP	11-19-14	11-19-14		A-14-005
DRILLING CONTRACTOR			BOREHOLE LOCATION (Offset, Station, Line)	SURFACE ELEVATION
Cascade			69.50' Rt Sta 29+38 Bear Valley Rd. C	2964.0 ft
DRILLING METHOD			DRILL RIG	BOREHOLE DIAMETER
Hollow-Stem Auger			CME 75	8 in
SAMPLER TYPE(S) AND SIZE(S) (ID)			SPT HAMMER TYPE	HAMMER EFFICIENCY, ERi
Bulk, Std Cal (2.5")			Automatic 140 lb 30" drop	60% (Assumed)
BOREHOLE BACKFILL AND COMPLETION			GROUNDWATER READINGS DURING DRILLING / AFTER DRILLING (DATE)	TOTAL DEPTH OF BORING
Soil Cuttings			No Groundwater Encountered	50.5 ft

ELEVATION (ft)	DEPTH (ft)	DESCRIPTION	Sample Location	Sample Number	Blows per 6 in.	Blows per foot	Recovery (%)	RQD (%)	Moisture Content (%)	Dry Unit Weight (pcf)	Shear Strength (tsf)	Drilling Method	Casing Depth	Remarks
	0	SILTY SAND (SM); loose to medium dense; reddish brown; dry to moist; trace fine GRAVEL; mostly fine to medium with trace coarse SAND [FILL].		Bulk			100							
	1													
2962.00	2				7 7 5	12	100		13.3	103.6				
	3	Medium dense.		3										EI, CR
2960.00	4													
	5	SANDY SILT (ML); very stiff; variegated olive brown and reddish brown; moist; trace fine GRAVEL; some fine and trace coarse SAND [FILL].			3 3 6	9	100		17.8	94.1				
2958.00	6			6							PP = 3.6			DS, C
	7													
2956.00	8	SANDY SILT (ML); very stiff; chaotic pale olive brown and olive brown; moist; some fine SAND; medium plasticity fines; trace oxidation [ALLUVIUM].			7 16 28	44	100 100		26.3	95.7				PA
	9			9							PP = > 4.5			DS, C
2954.00	10			Bulk										
	11				7 9 14	23	100		23.8	97.4				
2952.00	12			12							PP = 4.0			C
	13													
2950.00	14	Poorly graded SAND (SP); dense; pale reddish brown; moist; mostly fine to medium with little coarse SAND; trace SILT.			12 17 26	43	100		10.1	114.8				
	15			15										
2948.00	16													
	17	Well-graded SAND (SW); medium dense; pale brown; moist; trace fine GRAVEL.			9 11 17	28	100		3.6	102.8				
2946.00	18			18										
	19													
2944.00	20				12 17 23	40	100		0.8	104.0				
	21	Dense.		21										
2942.00	22													
	23													
2940.00	24	Very dense.				65	100		1.7	105.0				
	25													

(continued)

GEOCON WEST, INC.
Geocon West, Inc.
3303 North San Fernando Blvd, Suite 100
Burbank CA 91504
Telephone: 818-841-8388
Fax: 818-841-1704

PROJECT OR BRIDGE NAME
Bear Valley Road overhead at BNSF Railroad

PROJECT NO.
A90720601

DATE

HOLE ID
A-14-005

GEOCON WEST 5BR-STANDARD A9072-06-01 BEAR VALLEY ROAD BORINGS.GPJ CALTRANS LIBRARY DEC09-UNLOCK 2.GLB 2/16/15

ELEVATION (ft)	DEPTH (ft)	Material Graphics	DESCRIPTION	Sample Location	Sample Number	Blows per 6 in.	Blows per foot	Recovery (%)	RQD (%)	Moisture Content (%)	Dry Unit Weight (pcf)	Shear Strength (tsf)	Drilling Method	Casing Depth	Remarks
	25		Well-graded SAND (SW) *(continued)*.		25	12 29 36					105.0				PA
2938.00	26														
	27														
2936.00	28														
	29					15 36 40	76	100		2.6	112.7				
2934.00	30				30										
	31														
2932.00	32														
	33														
2930.00	34		SANDY SILT (ML); very stiff; olive brown; moist; trace coarse to fine GRAVEL; some medium to fine SAND; nonplastic fines [ALLUVIUM].			33 50 for 3"		100		10.8	98.8				
	35				35							PP = 2.7			CP, PI
2928.00	36														
	37														
2926.00	38														
	39		SILTY SAND (SM); very dense; brown; moist; mostly fine to medium with trace coarse SAND.			13 50 for 6"		100		12.2	116.7				
2924.00	40				40										
	41														
2922.00	42														
	43														
2920.00	44					11 22 44	66	100		14.8	109.5				
	45		Increase in SILT content.		45										
2918.00	46														
	47														
2916.00	48														
	49					8 11 19	30	100		27.3	93.6				
2914.00	50		SANDY SILT (ML); very stiff; brown to reddish brown; low plasticity fines.		50							PP = 3.7			
	51		Bottom of borehole at 50.5 ft bgs												
2912.00	52		Borehole terminated at planned depth.												
	53		This Boring Record was developed in accordance with the Caltrans Soil & Rock Logging, Classification, and Presentation Manual (2010) except as noted on the Soil or Rock Legend or below.												
2910.00	54														
	55														

GEOCON WEST, INC.

Geocon West, Inc.
3303 North San Fernando Blvd, Suite 100
Burbank CA 91504
Telephone: 818-841-8388
Fax: 818-841-1704

PROJECT OR BRIDGE NAME
Bear Valley Road overhead at BNSF Railroad

PROJECT NO.
A90720601

DATE

HOLE ID
A-14-005

SHEET
2 of 2

GEOCON WEST 5BR-STANDARD A9072-06-01 BEAR VALLEY ROAD BORINGS.GPJ CALTRANS LIBRARY DEC09-UNLOCK 2.GLB 2/16/15

LOGGED BY	BEGIN DATE	COMPLETION DATE	BOREHOLE LOCATION (Lat/Long or North/East and Datum)	HOLE ID
RP	11-19-14	11-19-14		A-14-006
DRILLING CONTRACTOR			BOREHOLE LOCATION (Offset, Station, Line)	SURFACE ELEVATION
Cascade			74.50' Lt Sta 29+24 Bear Valley Rd. C	2962.0 ft
DRILLING METHOD			DRILL RIG	BOREHOLE DIAMETER
Hollow-Stem Auger			CME 75	8 in
SAMPLER TYPE(S) AND SIZE(S) (ID)			SPT HAMMER TYPE	HAMMER EFFICIENCY, ERi
Bulk, Std Cal (2.5"), SPT (1.4")			Automatic 140 lb 30" drop	60% (Assumed)
BOREHOLE BACKFILL AND COMPLETION			GROUNDWATER READINGS DURING DRILLING AFTER DRILLING (DATE)	TOTAL DEPTH OF BORING
Soil Cuttings			No Groundwater Encountered	50.5 ft

ELEVATION (ft)	DEPTH (ft)	DESCRIPTION	Sample Location	Sample Number	Blows per 6 in.	Blows per foot	Recovery (%)	RQD (%)	Moisture Content (%)	Dry Unit Weight (pcf)	Shear Strength (tsf)	Drilling Method	Casing Depth	Remarks
	0	SILTY SAND (SM); loose; olive brown to reddish brown; moist; trace fine GRAVEL; mostly fine to medium SAND [FILL].		Bulk			100							CP, CR
2960.00	2	Medium dense; brown; trace carbon deposit staining.		2.5	13 11 11	22	100		7.4	114.0				
2958.00	4				2 3 3	6	100		6.1					
	5	Loose.		5										
2956.00	6													
	7	Some carbon deposits.		7.5	3 3 4	7	100		8.0	107.6				DS, C
2954.00	8													
	9	Poorly graded SAND (SP); loose; strong brown; moist; trace fine GRAVEL; mostly fine with some medium SAND [ALLUVIUM].		10	2 3 3	6	100		5.9					
2952.00	10													
2950.00	12	Medium dense; reddish brown.		12.5	10 11 15	26	100		11.2	111.8				
2948.00	14	Trace coarse SAND.		15	7 9 10	19	100		2.9					
2946.00	16													
	17	Well-graded SAND (SW); dense; very pale brown; moist; trace fine GRAVEL [ALLUVIUM].		17.5	10 15 24	39	100		2.7	106.6				
2944.00	18													
	19	Lean CLAY (CL); very stiff; olive brown; moist; low plasticity fines [ALLUVIUM].		20	15 13 11	24	100		9.3					PI
	21													
2940.00	22	Poorly graded SAND (SP); very dense; very pale brown; moist; trace fine GRAVEL; mostly medium with some coarse and little fine SAND [ALLUVIUM].		22.5	19 26 36	62	100		4.3	108.2				
2938.00	24	Pale brown; mostly fine to medium SAND.					100		1.1					
	25													

(continued)

GEOCON WEST, INC.
Geocon West, Inc.
3303 North San Fernando Blvd, Suite 100
Burbank CA 91504
Telephone: 818-841-8388
Fax: 818-841-1704

PROJECT OR BRIDGE NAME
Bear Valley Road overhead at BNSF Railroad

PROJECT NO.
A90720601

DATE

HOLE ID
A-14-006

GEOCON WEST 5BR-STANDARD A9072-06-01 BEAR VALLEY ROAD BORINGS.GPJ CALTRANS LIBRARY DEC09-UNLOCK 2.GLB 2/16/15

ELEVATION (ft)	DEPTH (ft)	Material Graphics	DESCRIPTION	Sample Location	Sample Number	Blows per 6 in.	Blows per foot	Recovery (%)	RQD (%)	Moisture Content (%)	Dry Unit Weight (pcf)	Shear Strength (tsf)	Drilling Method	Casing Depth	Remarks
	25		Poorly graded SAND (SP) *(continued)*.		25	16 40 50 for 4"									
2936.00	26														
	27				27.5	14 25 32	57	100		2.4	107.2				
2934.00	28														
	29		Varigated olive brown, pale brown and reddish brown; mostly fine with little coarse SAND.		30	21 44 46	90	100		1.9					
2932.00	30														
	31														
2930.00	32				32.5	9 27 40	67	100		1.5	111.0				
	33														
2928.00	34														
	35		Pink to reddish brown; mostly fine to medium SAND. SANDY SILT (ML); hard; olive brown; moist; fine SAND; trace oxidation [ALLUVIUM].		35	18 16 15	31	100		12.2					PI
2926.00	36														
	37				37.5	10 18 50 for 5"		100		19.1	109.0	PP = > 4.5			
2924.00	38		SANDY lean CLAY (CL); hard; mottled grayish brown and brown; moist; medium SAND; medium plasticity fines [ALLUVIUM].												
	39		Poorly graded SAND (SP); very dense; olive brown; moist; fine with some medium SAND [ALLUVIUM].		40	11 22 30	52	100		5.4					
2922.00	40														
	41														
2920.00	42		SILTY SAND (SM); very dense; olive brown; moist; mostly fine SAND; trace carbon deposits [ALLUVIUM].		42.5	18 33 36	69	100		6.5	113.0				
	43														
2918.00	44														
	45		Poorly graded SAND with SILT (SP-SM); medium dense; olive brown; moist; mostly fine SAND [ALLUVIUM].		45	8 11 17	28	100		6.8					
2916.00	46														
	47		SILTY SAND (SM); dense; olive brown; moist; mostly fine SAND [ALLUVIUM].		47.5	13 21 26	47	100		14.2	100.7				
2914.00	48		Poorly graded SAND (SP); dense; olive brown; moist; mostly fine SAND [ALLUVIUM].												
	49														
2912.00	50		Lean CLAY (CL); stiff; brown; moist; low plasticity fines [ALLUVIUM].		50	4 6 8	14	100		23.1					
	51		Bottom of borehole at 50.5 ft bgs												
2910.00	52		Borehole terminated at planned depth.												
	53		This Boring Record was developed in accordance with the Caltrans Soil & Rock Logging, Classification, and Presentation Manual (2010) except as noted on the Soil or Rock Legend or below.												
2908.00	54														
	55														

GEOCON WEST, INC.

Geocon West, Inc.
3303 North San Fernando Blvd, Suite 100
Burbank CA 91504
Telephone: 818-841-8388
Fax: 818-841-1704

PROJECT OR BRIDGE NAME
Bear Valley Road overhead at BNSF Railroad

PROJECT NO.
A90720601

DATE

HOLE ID
A-14-006

SHEET
2 of 2

GEOCON WEST 5BR-STANDARD A9072-06-01 BEAR VALLEY ROAD BORINGS.GPJ CALTRANS LIBRARY DEC09-UNLOCK 2.GLB 2/16/15

LOGGED BY	BEGIN DATE	COMPLETION DATE	BOREHOLE LOCATION (Lat/Long or North/East and Datum)	HOLE ID
RP	11-18-14	11-18-14		A-14-007
DRILLING CONTRACTOR			BOREHOLE LOCATION (Offset, Station, Line)	SURFACE ELEVATION
Cascade			70.00' Rt Sta 29+92 Bear Valley Rd. C	2964.0 ft
DRILLING METHOD			DRILL RIG	BOREHOLE DIAMETER
Hollow-Stem Auger			CME 75	8 in
SAMPLER TYPE(S) AND SIZE(S) (ID)			SPT HAMMER TYPE	HAMMER EFFICIENCY, ERi
Bulk, Std Cal (2.5"), SPT (1.4")			Automatic 140 lb 30" drop	60% (Assumed)
BOREHOLE BACKFILL AND COMPLETION			GROUNDWATER READINGS DURING DRILLING AFTER DRILLING (DATE)	TOTAL DEPTH OF BORING
Soil Cuttings			No Groundwater Encountered	50.5 ft

ELEVATION (ft)	DEPTH (ft)	DESCRIPTION	Sample Location	Sample Number	Blows per 6 in.	Blows per foot	Recovery (%)	RQD (%)	Moisture Content (%)	Dry Unit Weight (pcf)	Shear Strength (tsf)	Drilling Method	Casing Depth	Remarks
	0	SILTY SAND (SM); loose to medium dense; brown; moist; trace fine GRAVEL; mostly fine to medium with some coarse SAND [FILL].		Bulk			100							PA
2962.00	2			2.5	6 5 5	10	100		6.3					
	3	Well-graded SAND (SW); loose; brown; moist [FILL].												
2960.00	4				4 4 4	8	100		4.2	100.4				
	5	Dark olive brown.		5										DS
2958.00	6													
	7			7.5	3 2 3	5	100		14.6					
2956.00	8													
	9	SANDY lean CLAY (CL); hard; grayish brown and brown; moist; little fine SAND; low plasticity fines [ALLUVIUM].			9 14 17	31	100		14.7	109.6				
2954.00	10			10							PP = >4.5			DS, C
	11													
2952.00	12	Lean CLAY (CL); stiff; mottled olive brown and reddish brown; moist; trace oxidation staining [ALLUVIUM].		12.5	4 6 9	15	100		20.5					PI
	13													
2950.00	14	Poorly graded SAND (SP); very dense; mottled reddish brown, yellowish brown, and pale brown; moist; trace fine GRAVEL; mostly fine with trace coarse SAND [ALLUVIUM].			14 27 26	53	100		5.2	118.5				
	15			15										C
2948.00	16													
	17			17.5	11 14 14	28	100		4.5					
2946.00	18	Poorly graded SAND (SP); very loose; pale brown; moist; fine to medium grained SAND [ALLUVIUM].												
	19				22 31 25	56	100		1.8	112.3				
2944.00	20			20										C
	21													
2942.00	22			22.5	16 16 14	30	100		2.6					
	23													
2940.00	24	Trace fine GRAVEL; mostly medium with some fine and coarse SAND.				58	100		1.5	114.5				
	25													

(continued)

GEOCON WEST, INC.
Geocon West, Inc.
3303 North San Fernando Blvd, Suite 100
Burbank CA 91504
Telephone: 818-841-8388
Fax: 818-841-1704

PROJECT OR BRIDGE NAME
Bear Valley Road overhead at BNSF Railroad

PROJECT NO.
A90720601

DATE

HOLE ID
A-14-007

GEOCON WEST 5BR-STANDARD A9072-06-01 BEAR VALLEY ROAD BORINGS.GPJ CALTRANS LIBRARY DEC09-UNLOCK 2.GLB 2/16/15

ELEVATION (ft)	DEPTH (ft)	Material Graphics	DESCRIPTION	Sample Location	Sample Number	Blows per 6 in.	Blows per foot	Recovery (%)	RQD (%)	Moisture Content (%)	Dry Unit Weight (pcf)	Shear Strength (tsf)	Drilling Method	Casing Depth	Remarks
	25		Poorly graded SAND (SP) *(continued)*.		25	24					114.5				C
2938.00	26					26 32									
	27		Mostly fine SAND.		27.5	17 23 28	51	100		2.0					
2936.00	28														
	29					23 38	80	100		1.2	112.9				
2934.00	30		Trace coarse GRAVEL.		30	42									C
	31														
2932.00	32														
	33				32.5										
2930.00	34					30 36	89	100		1.7	113.7				
	35		Mostly medium to coarse with some fine SAND.		35	53									
2928.00	36														
	37				37.5	60 for 6"		100		2.0					
2926.00	38														
	39		SILTY SAND (SM); very dense; olive brown; moist; mostly fine with some medium SAND.			41 60		100		8.9	101.0				
2924.00	40				40										
	41														
2922.00	42				42.5	21 32 21	53	100		6.8					
	43		Poorly graded SAND (SP); very dense; pale brown; moist; fine to medium SAND.												
2920.00	44		SANDY SILT (ML); very stiff to hard; yellowish brown; moist; low plasticity fines; fine SAND.			12 20	44	100		13.4	100.9				
	45				45	24						PP = 3.8			
2918.00	46														
	47				47.5	11 15 17	32	100		20.9					
2916.00	48		Olive brown.												
	49		SILTY SAND (SM); very dense; reddish brown; moist; fine SAND; trace carbon deposits.			13 3		100		10.4	120.9				
2914.00	50				50	50 for 4"									
	51		Bottom of borehole at 50.5 ft bgs												
2912.00	52		Borehole terminated at planned depth.												
	53		This Boring Record was developed in accordance with the Caltrans Soil & Rock Logging, Classification, and Presentation Manual (2010) except as noted on the Soil or Rock Legend or below.												
2910.00	54														
	55														

GEOCON WEST, INC.

Geocon West, Inc.
3303 North San Fernando Blvd, Suite 100
Burbank CA 91504
Telephone: 818-841-8388
Fax: 818-841-1704

PROJECT OR BRIDGE NAME
Bear Valley Road overhead at BNSF Railroad

PROJECT NO.
A90720601

DATE

HOLE ID
A-14-007

SHEET
2 of 2

GEOCON WEST 5BR-STANDARD A9072-06-01 BEAR VALLEY ROAD BORINGS.GPJ CALTRANS LIBRARY DEC09-UNLOCK 2.GLB 2/16/15

LOGGED BY	BEGIN DATE	COMPLETION DATE	BOREHOLE LOCATION (Lat/Long or North/East and Datum)	HOLE ID
RP	11-18-14	11-19-14		A-14-008
DRILLING CONTRACTOR			BOREHOLE LOCATION (Offset, Station, Line)	SURFACE ELEVATION
Cascade			74.50' Lt Sta 29+78 Bear Valley Rd. C	2961.0 ft
DRILLING METHOD			DRILL RIG	BOREHOLE DIAMETER
Hollow-Stem Auger			CME 75	8 in
SAMPLER TYPE(S) AND SIZE(S) (ID)			SPT HAMMER TYPE	HAMMER EFFICIENCY, ERi
Bulk, Std Cal (2.5")			Automatic 140 lb 30" drop	60% (Assumed)
BOREHOLE BACKFILL AND COMPLETION			GROUNDWATER READINGS DURING DRILLING AFTER DRILLING (DATE)	TOTAL DEPTH OF BORING
Soil Cuttings			No Groundwater Encountered	50.5 ft

ELEVATION (ft)	DEPTH (ft)	DESCRIPTION	Sample Location	Sample Number	Blows per 6 in.	Blows per foot	Recovery (%)	RQD (%)	Moisture Content (%)	Dry Unit Weight (pcf)	Shear Strength (tsf)	Drilling Method	Casing Depth	Remarks
	0	SILTY SAND (SM); loose; brown; dry to moist; trace fine GRAVEL; mostly fine to medium with trace coarse SAND [FILL].												
2959.00	2													
	3				3 4 4	8	100		4.4	109.3				
2957.00	4	Mostly fine with little coarse and trace medium SAND.		4										C
	5			Bulk			100							PA
2955.00	6	Well-graded SAND (SW); loose; reddish brown; moist; little fine GRAVEL [ALLUVIUM].			3 3 3	6	100		12.0	107.5				
	7			7										C
2953.00	8													
	9	Poorly graded SAND (SP); loose; reddish brown; moist; mostly fine to medium with little coarse SAND [ALLUVIUM].			2 3 3	6	100		4.4	105.9				
2951.00	10			10										C
	11													
2949.00	12	Medium dense; trace coarse GRAVEL.			8 10 12	22	100		5.0	110.6				
	13			13										
2947.00	14													
	15				6 10 14	24	100		3.7	101.0				
2945.00	16	Trace fine GRAVEL.		16										C
	17													
2943.00	18				14 11 5	16	100		2.2	104.1				
	19	Trace coarse GRAVEL.		19							PP = 2.0			C
2941.00	20	Lean CLAY (CL); stiff to very stiff; olive brown; moist; slightly oxidized [ALLUVIUM].												
	21													
2939.00	22													
	23													
2937.00	24	Well-graded SAND (SW); very dense; pale brown; moist; trace coarse GRAVEL; trace SILT [ALLUVIUM].				57	100		2.5	109.6				
	25													

(continued)

GEOCON WEST, INC.
Geocon West, Inc.
3303 North San Fernando Blvd, Suite 100
Burbank CA 91504
Telephone: 818-841-8388
Fax: 818-841-1704

PROJECT OR BRIDGE NAME
Bear Valley Road overhead at BNSF Railroad

PROJECT NO.
A90720601

DATE

HOLE ID
A-14-008

GEOCON WEST 5BR-STANDARD A9072-06-01 BEAR VALLEY ROAD BORINGS.GPJ CALTRANS LIBRARY DEC09-UNLOCK 2.GLB 2/16/15

ELEVATION (ft)	DEPTH (ft)	DESCRIPTION	Sample Location	Sample Number	Blows per 6 in.	Blows per foot	Recovery (%)	RQD (%)	Moisture Content (%)	Dry Unit Weight (pcf)	Shear Strength (tsf)	Drilling Method	Casing Depth	Remarks
	25	Well-graded SAND (SW) *(continued)*.		25	8 27 30					109.6				C
2935.00	26													
	27													
2933.00	28													
	29	Poorly graded SAND (SP); very dense; pale brown; moist; mostly fine to medium with some coarse SAND [ALLUVIUM].			20 30 37	67	100		3.0	109.7				
2931.00	30			30										
	31													
2929.00	32													
	33													
2927.00	34	Poorly graded SAND (SP); dense; mottled olive brown and reddish brown; moist; mostly fine with trace coarse SAND; trace SILT [ALLUVIUM].			21 18 31	49	100		21.9	102.7				
	35			35										
2925.00	36	Reddish brown; increase in SILT content.												
	37													
2923.00	38													
	39				11 21 38	59	100		8.7	118.8				
2921.00	40	Very dense; mottled pale brown, reddish brown, and olive brown; mostly fine with some medium and trace coarse SAND.												
	41													
2919.00	42													
	43													
2917.00	44	SANDY SILT (ML); hard; dark yellowish brown; moist; fine SAND; nonplastic to low plasticity fines [ALLUVIUM].			10 27 32	59	100		13.6	110.4				
	45			45							PP = >4.5			
2915.00	46													
	47													
2913.00	48													
	49				7 20 31	51	100		17.1	107.8				
2911.00	50	Low plasticity fines; trace variegated carbon deposits.		50							PP = >4.5			
	51	Bottom of borehole at 50.5 ft bgs												
2909.00	52	Borehole terminated at planned depth.												
	53	This Boring Record was developed in accordance with the Caltrans Soil & Rock Logging, Classification, and Presentation Manual (2010) except as noted on the Soil or Rock Legend or below.												
2907.00	54													
	55													

GEOCON WEST, INC.

Geocon West, Inc.
3303 North San Fernando Blvd, Suite 100
Burbank CA 91504
Telephone: 818-841-8388
Fax: 818-841-1704

PROJECT OR BRIDGE NAME
Bear Valley Road overhead at BNSF Railroad

PROJECT NO.
A90720601

DATE

HOLE ID
A-14-008

SHEET
2 of 2

GEOCON WEST 5BR-STANDARD A9072-06-01 BEAR VALLEY ROAD BORINGS.GPJ CALTRANS LIBRARY DEC09-UNLOCK 2.GLB 2/16/15

APPENDIX B

APPENDIX B

LABORATORY TESTING

Laboratory tests were performed in accordance with California Test Methods or generally accepted test methods of the American Society for Testing and Materials (ASTM). The types of tests performed are listed below:

- In-Place Dry Density and Moisture Content: ASTM D2937 (CTM 226)
- Direct Shear Strength: ASTM D 3080
- Consolidation: ASTM D 2435
- Atterberg Limits: ASTM D 4318
- Grain Size Distribution: ASTM D 422
- Compaction Curve: D 1557
- R-value: CTM 301
- pH and Resistivity: CTM 643
- Sulfate Content: CTM 417
- Chloride Content: CTM 422

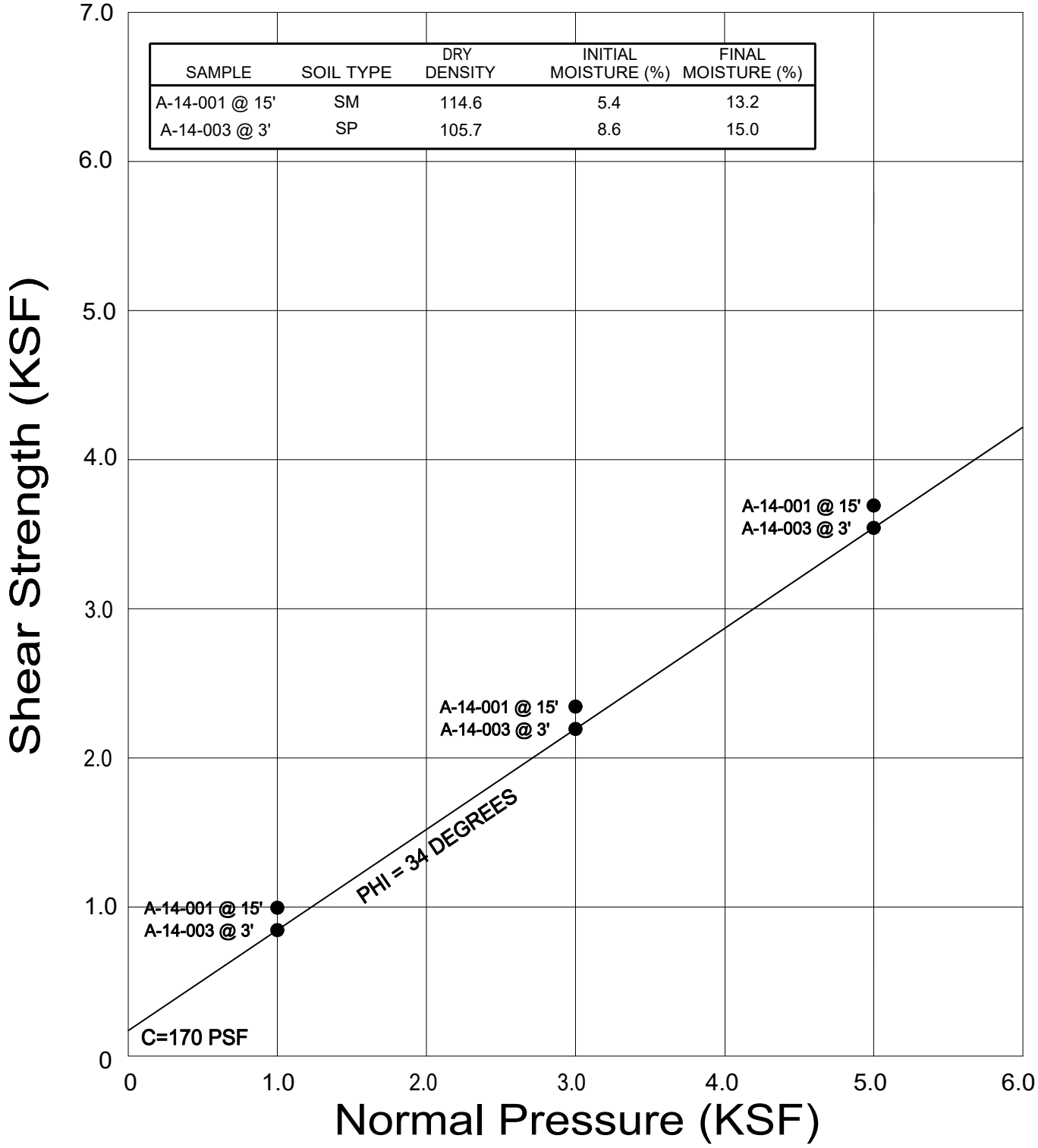

SAMPLE	SOIL TYPE	DRY DENSITY	INITIAL MOISTURE (%)	FINAL MOISTURE (%)
A-14-001 @ 15'	SM	114.6	5.4	13.2
A-14-003 @ 3'	SP	105.7	8.6	15.0

● Direct Shear, Saturated

GEOCON WEST, INC.
ENVIRONMENTAL GEOTECHNICAL MATERIALS
3303 N. SAN FERNANDO BLVD. - SUITE 100 - BURBANK, CA 91504
PHONE (818) 841-8388 - FAX (818) 841-1704

DIRECT SHEAR TEST RESULTS

BEAR VALLEY ROAD OVERHEAD
AT BNSF RAILROAD
CITYOF VICTORVILLE, CALIFORNIA

Drafted by: JTA	Checked by: NDB	FEB 2017	PROJECT NO. A9072-06-01	FIG. B1

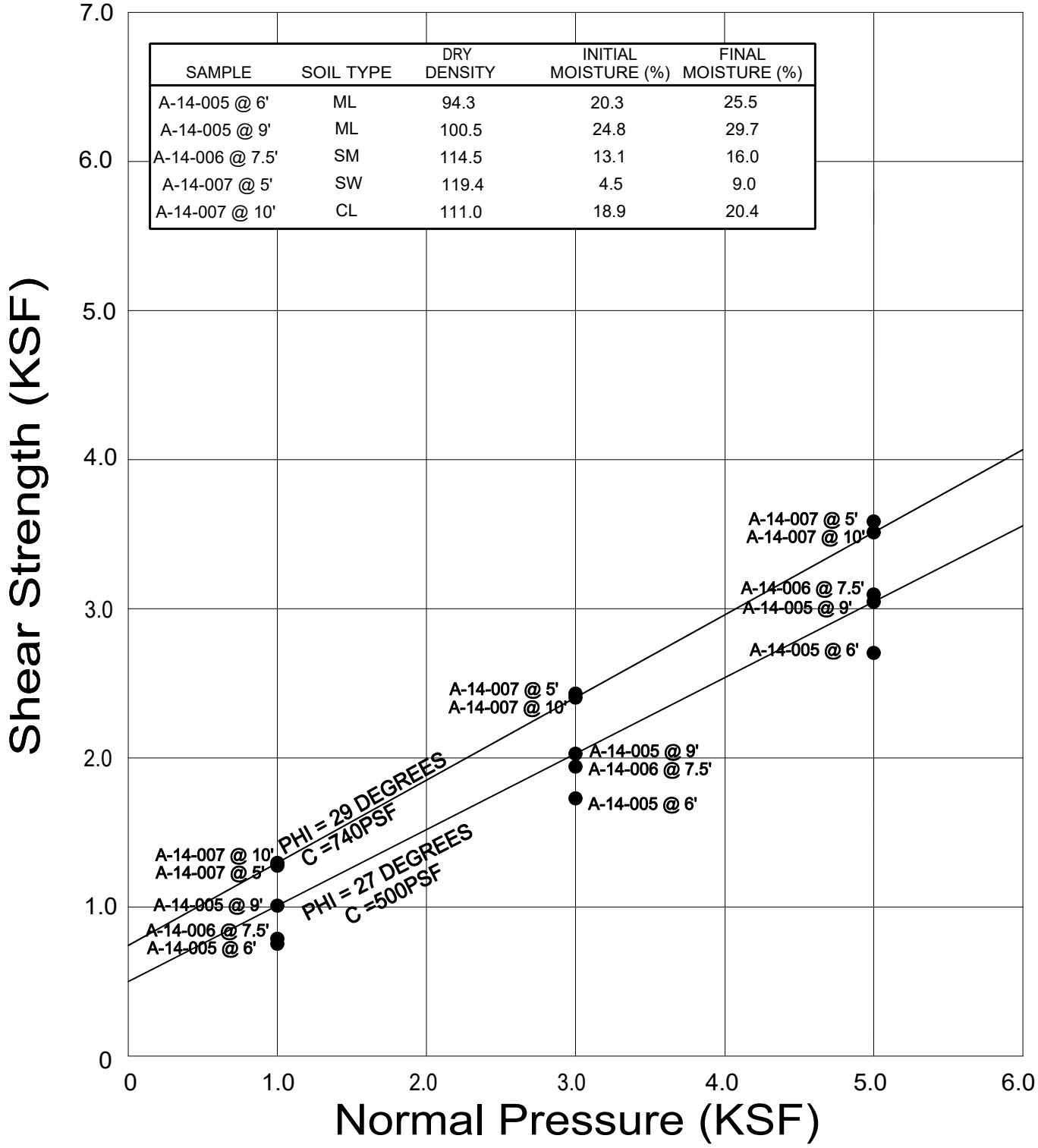

SAMPLE	SOIL TYPE	DRY DENSITY	INITIAL MOISTURE (%)	FINAL MOISTURE (%)
A-14-005 @ 6'	ML	94.3	20.3	25.5
A-14-005 @ 9'	ML	100.5	24.8	29.7
A-14-006 @ 7.5'	SM	114.5	13.1	16.0
A-14-007 @ 5'	SW	119.4	4.5	9.0
A-14-007 @ 10'	CL	111.0	18.9	20.4

GEOCON WEST, INC.
ENVIRONMENTAL GEOTECHNICAL MATERIALS
3303 N. SAN FERNANDO BLVD. - SUITE 100 - BURBANK, CA 91504
PHONE (818) 841-8388 - FAX (818) 841-1704

DIRECT SHEAR TEST RESULTS

BEAR VALLEY ROAD OVERHEAD
AT BNSF RAILROAD
CITYOF VICTORVILLE, CALIFORNIA

Drafted by: JTA	Checked by: NDB	FEB 2017	PROJECT NO. A9072-06-01	FIG. B2

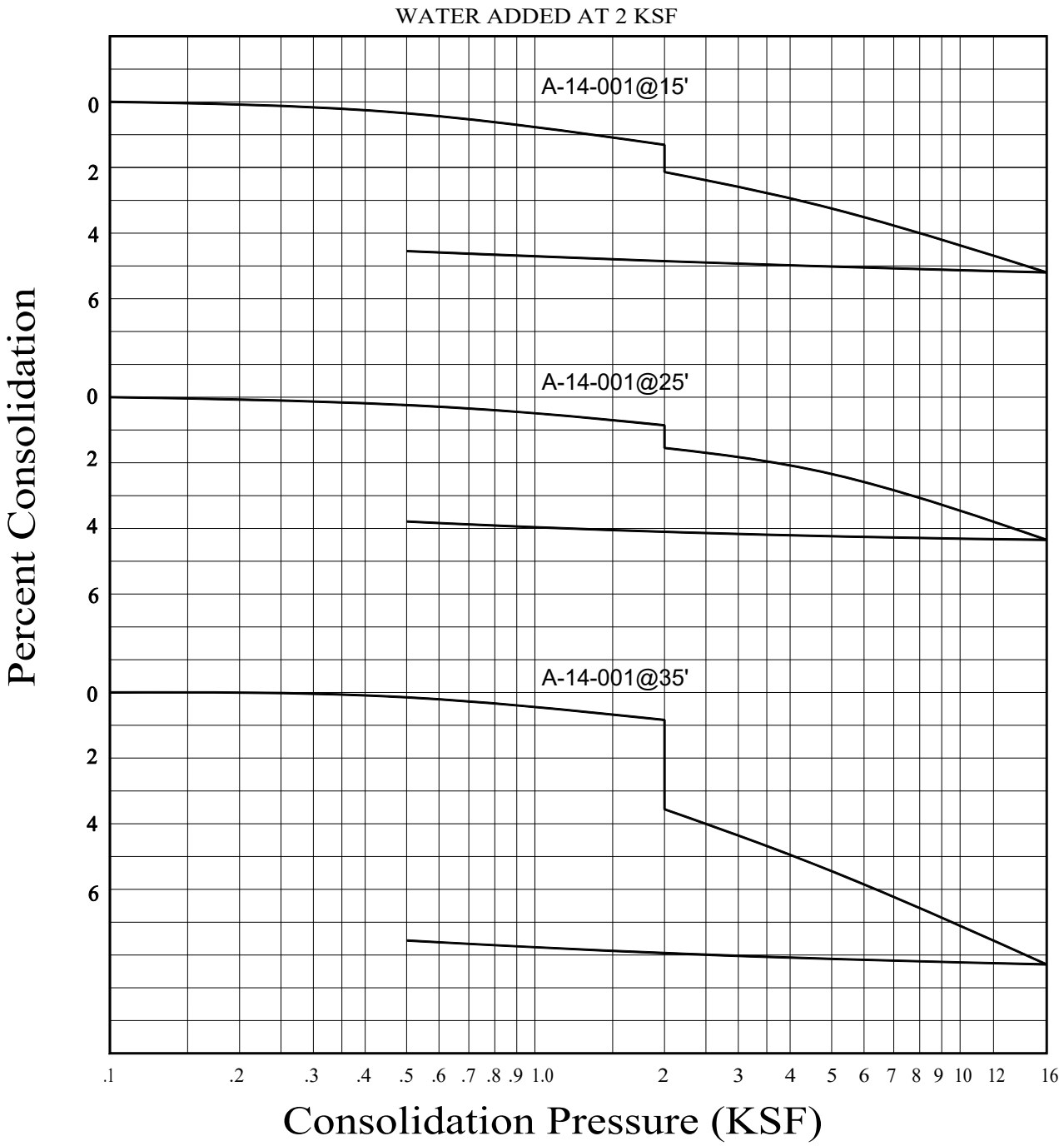

GEOCON
WEST, INC.

ENVIRONMENTAL GEOTECHNICAL MATERIALS
3303 N. SAN FERNANDO BLVD. - SUITE 100 - BURBANK, CA 91504
PHONE (818) 841-8388 - FAX (818) 841-1704

CONSOLIDATION TEST RESULTS

BEAR VALLEY ROAD OVERHEAD
AT BNSF RAILROAD
CITYOF VICTORVILLE, CALIFORNIA

Drafted by: JTA	Checked by: NDB	FEB 2017	PROJECT NO. A9072-06-01	FIG. B3

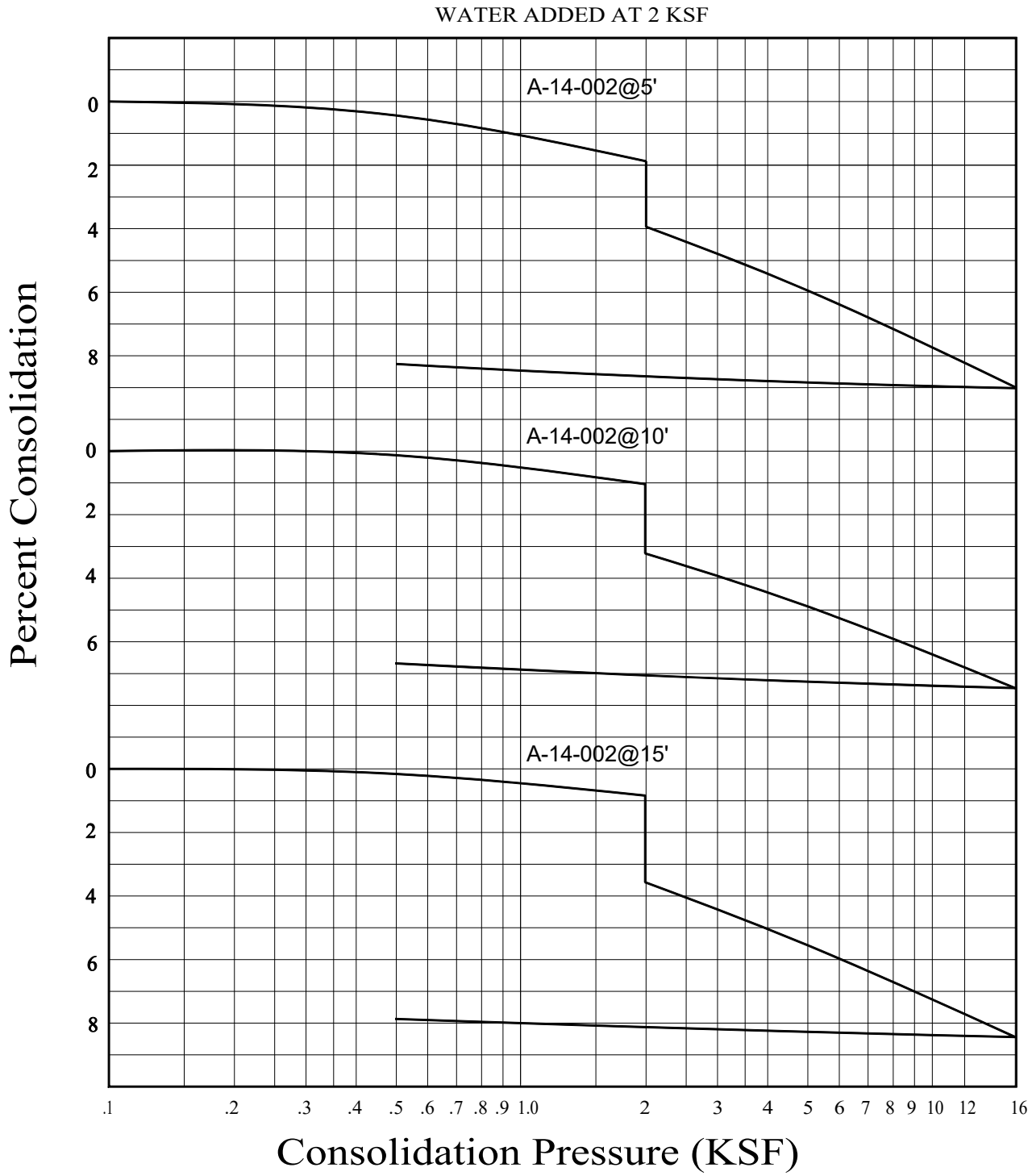

GEOCON
WEST, INC.

ENVIRONMENTAL GEOTECHNICAL MATERIALS
3303 N. SAN FERNANDO BLVD. - SUITE 100 - BURBANK, CA 91504
PHONE (818) 841-8388 - FAX (818) 841-1704

CONSOLIDATION TEST RESULTS

BEAR VALLEY ROAD OVERHEAD
AT BNSF RAILROAD
CITYOF VICTORVILLE, CALIFORNIA

Drafted by: JTA	Checked by: NDB	FEB 2017	PROJECT NO. A9072-06-01	FIG. B4

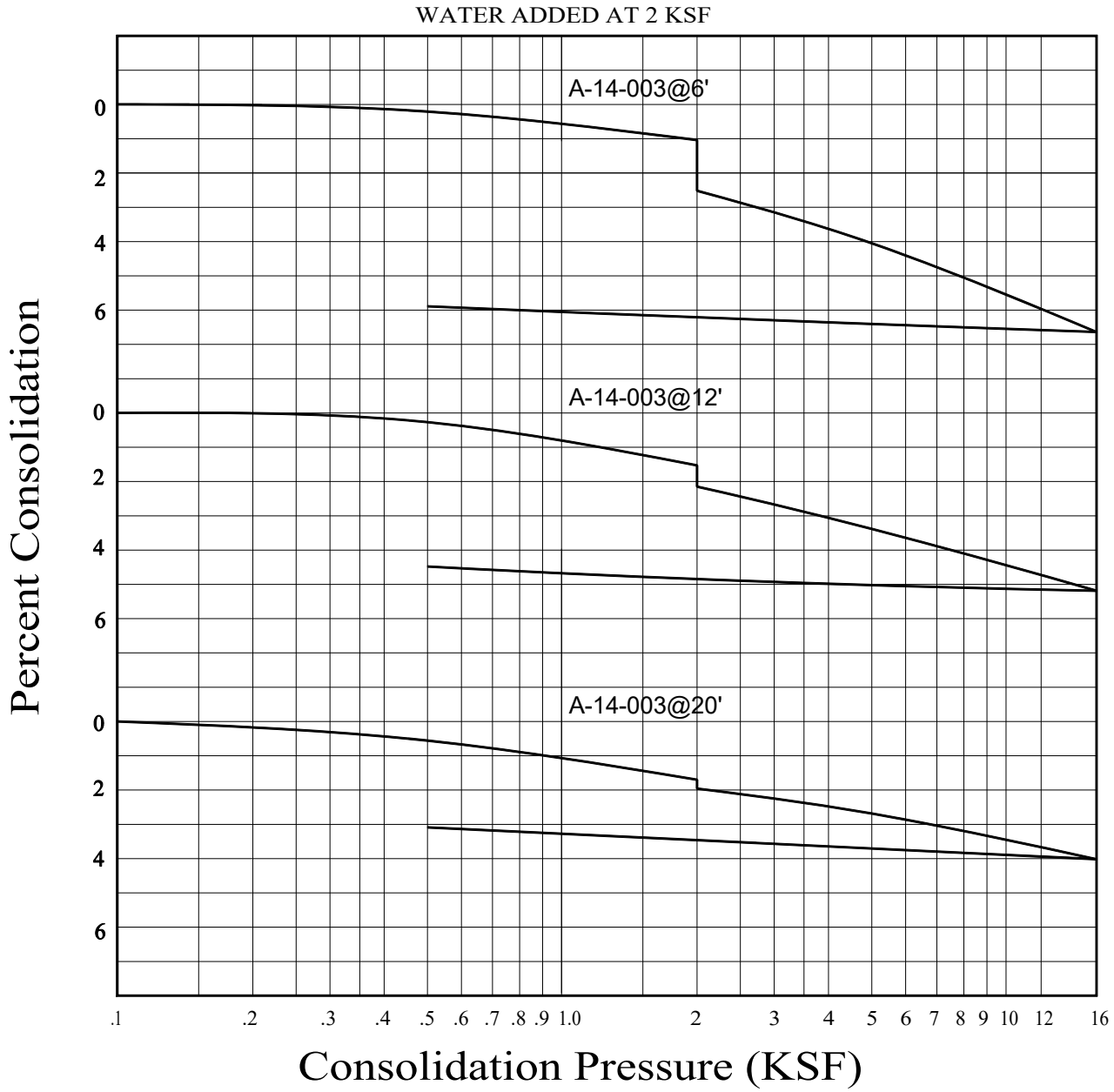

GEOCON
WEST, INC.

ENVIRONMENTAL GEOTECHNICAL MATERIALS
3303 N. SAN FERNANDO BLVD. - SUITE 100 - BURBANK, CA 91504
PHONE (818) 841-8388 - FAX (818) 841-1704

CONSOLIDATION TEST RESULTS

BEAR VALLEY ROAD OVERHEAD
AT BNSF RAILROAD
CITYOF VICTORVILLE, CALIFORNIA

Drafted by: JTA	Checked by: NDB	FEB 2017	PROJECT NO. A9072-06-01	FIG. B5

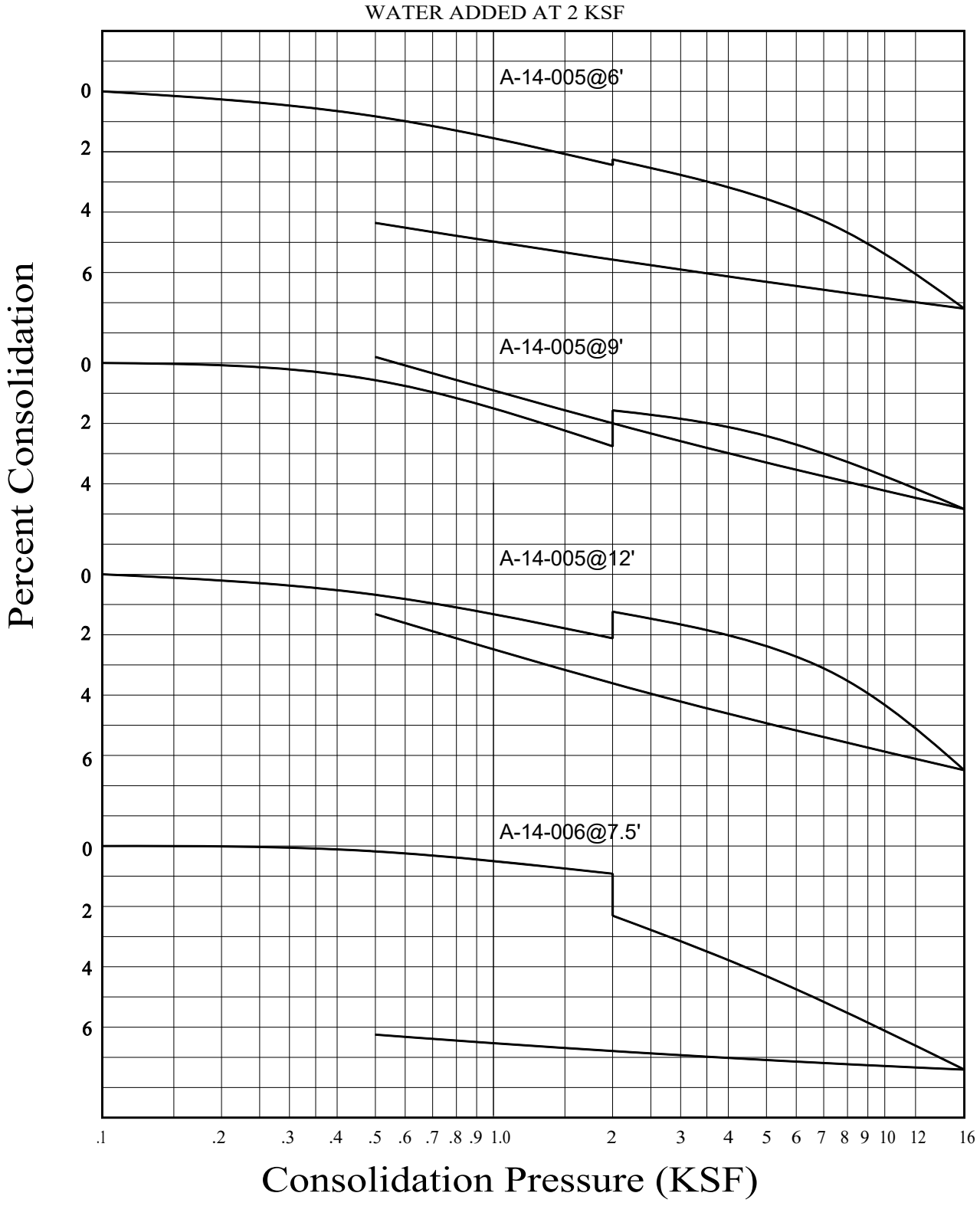

GEOCON
WEST, INC.

ENVIRONMENTAL GEOTECHNICAL MATERIALS
3303 N. SAN FERNANDO BLVD. - SUITE 100 - BURBANK, CA 91504
PHONE (818) 841-8388 - FAX (818) 841-1704

CONSOLIDATION TEST RESULTS

BEAR VALLEY ROAD OVERHEAD
AT BNSF RAILROAD
CITYOF VICTORVILLE, CALIFORNIA

Drafted by: JTA	Checked by: NDB	FEB 2017	PROJECT NO. A9072-06-01	FIG. B6

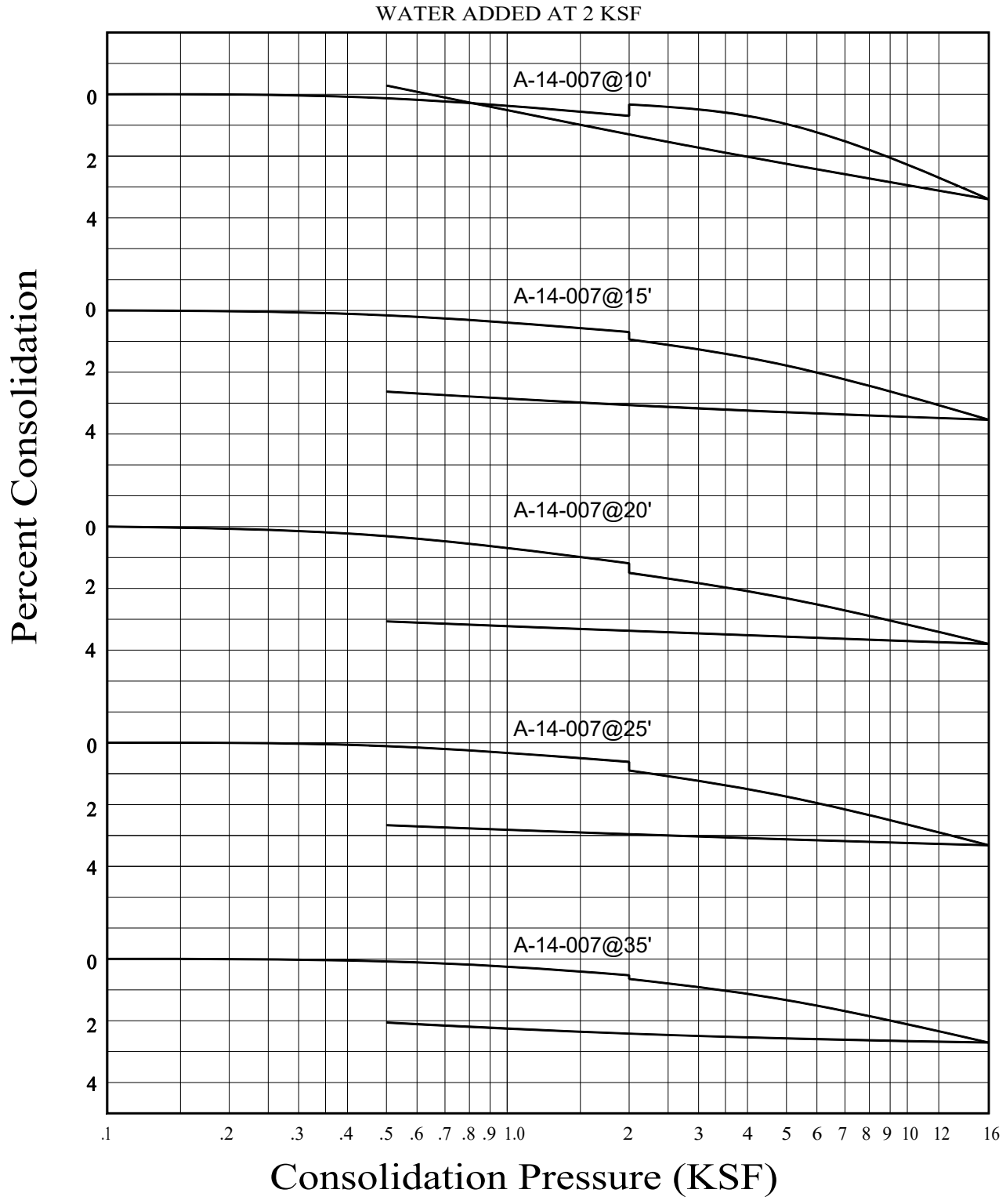

GEOCON
WEST, INC.

ENVIRONMENTAL GEOTECHNICAL MATERIALS
3303 N. SAN FERNANDO BLVD. - SUITE 100 - BURBANK, CA 91504
PHONE (818) 841-8388 - FAX (818) 841-1704

CONSOLIDATION TEST RESULTS

BEAR VALLEY ROAD OVERHEAD
AT BNSF RAILROAD
CITYOF VICTORVILLE, CALIFORNIA

Drafted by: JTA	Checked by: NDB	FEB 2017	PROJECT NO. A9072-06-01	FIG. B7

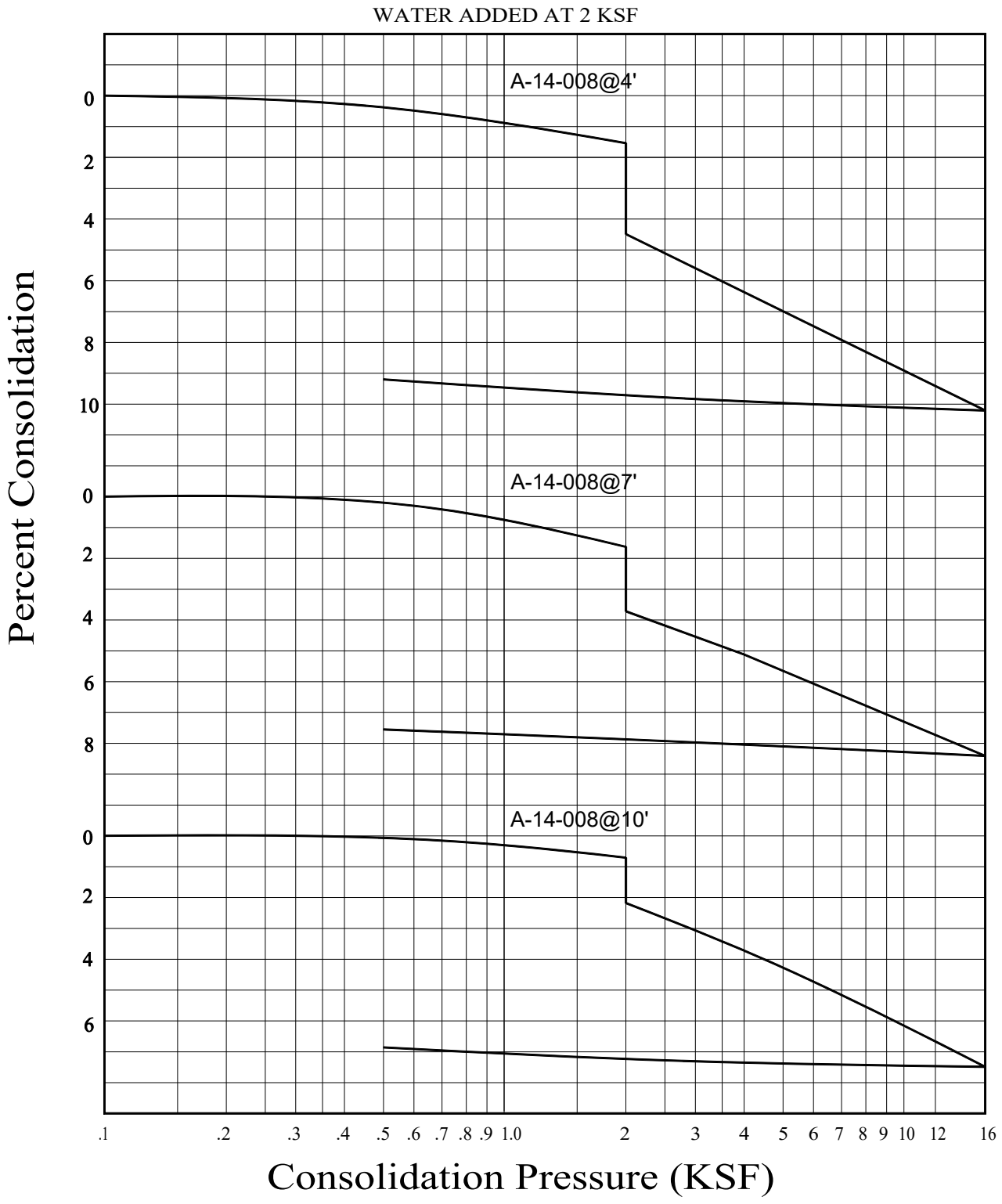

GEOCON
WEST, INC.

ENVIRONMENTAL GEOTECHNICAL MATERIALS
3303 N. SAN FERNANDO BLVD. - SUITE 100 - BURBANK, CA 91504
PHONE (818) 841-8388 - FAX (818) 841-1704

CONSOLIDATION TEST RESULTS

BEAR VALLEY ROAD OVERHEAD
AT BNSF RAILROAD
CITYOF VICTORVILLE, CALIFORNIA

Drafted by: JTA	Checked by: NDB	FEB 2017	PROJECT NO. A9072-06-01	FIG. B8

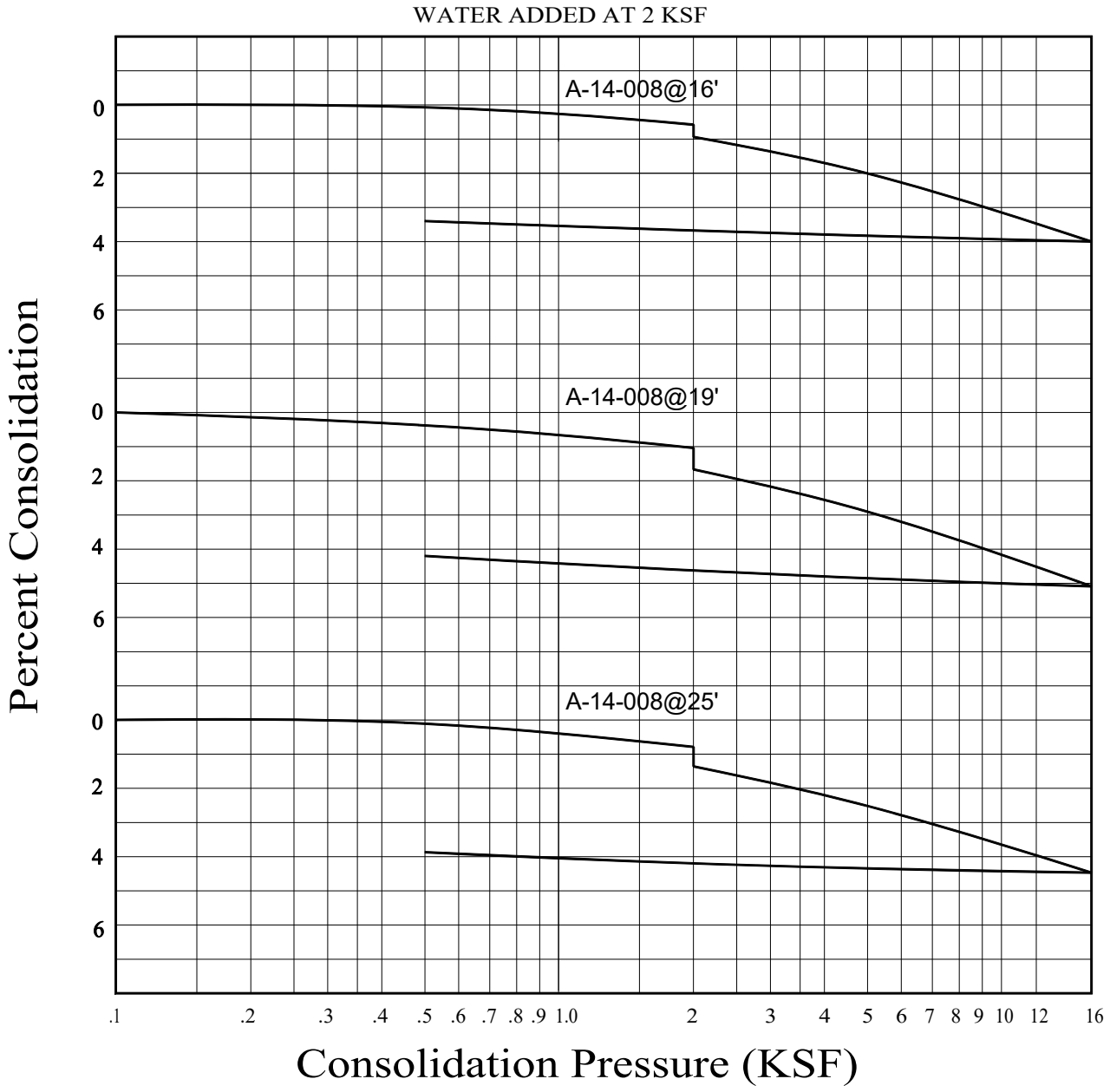

GEOCON
WEST, INC.

ENVIRONMENTAL GEOTECHNICAL MATERIALS
3303 N. SAN FERNANDO BLVD. - SUITE 100 - BURBANK, CA 91504
PHONE (818) 841-8388 - FAX (818) 841-1704

CONSOLIDATION TEST RESULTS

BEAR VALLEY ROAD OVERHEAD
AT BNSF RAILROAD
CITYOF VICTORVILLE, CALIFORNIA

Drafted by: JTA	Checked by: NDB	FEB 2017	PROJECT NO. A9072-06-01	FIG. B9

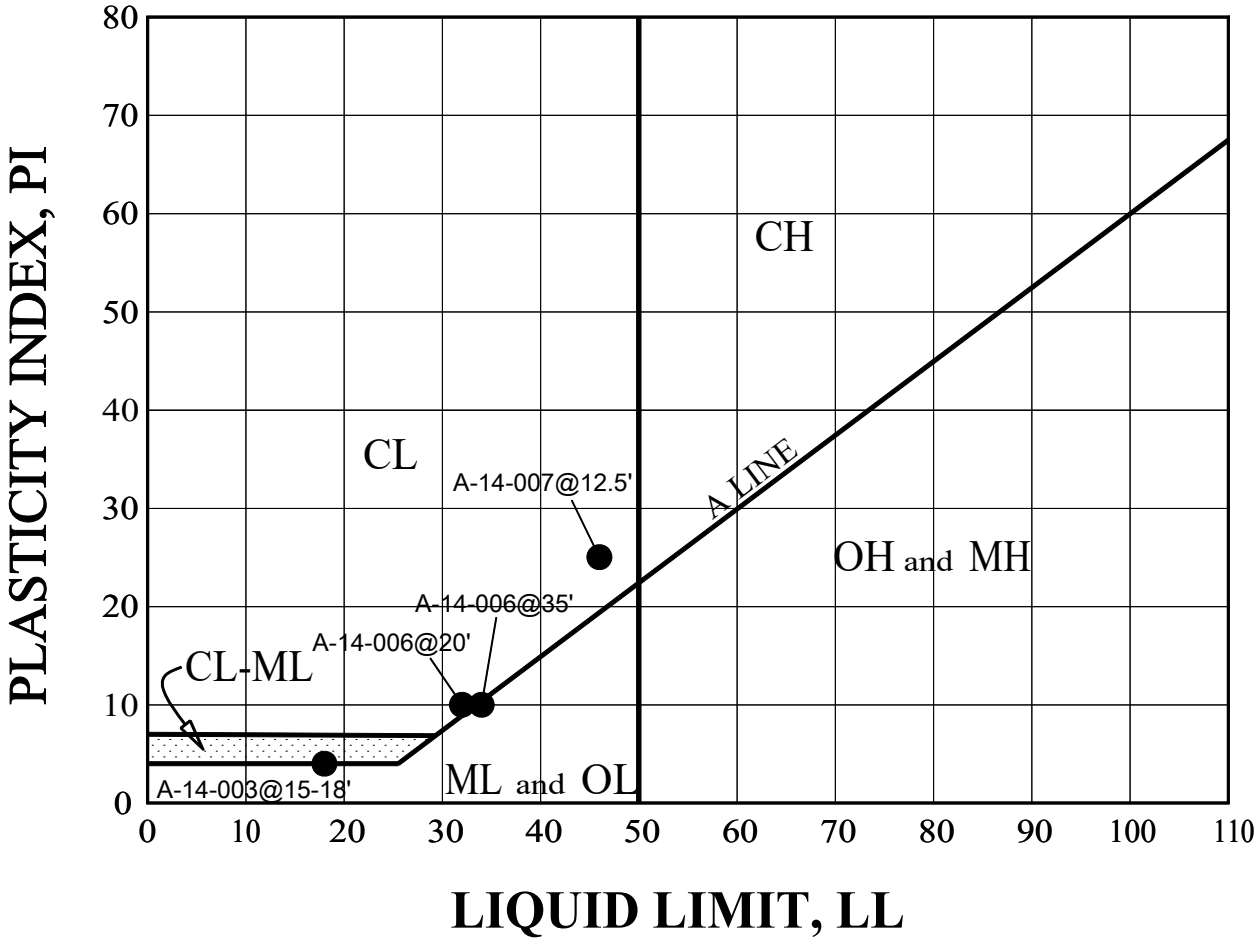

BORING NUMBER	DEPTH (FEET)	LL	PL	PI	SOIL BEHAVIOR
A-14-003	**15-18**	**18**	**14**	**4**	**CL-ML**
A-14-005	**35**	**N/P**	**N/P**	**N/P**	**- -**
A-14-006	**20**	**32**	**22**	**10**	**CL**
A-14-006	**35**	**34**	**24**	**10**	**ML**
A-14-007	**12.5**	**46**	**21**	**25**	**CL**

*N/P indicates Non-Plastic

GEOCON WEST, INC.
ENVIRONMENTAL GEOTECHNICAL MATERIALS
3303 N. SAN FERNANDO BLVD. - SUITE 100 - BURBANK, CA 91504
PHONE (818) 841-8388 - FAX (818) 841-1704

Drafted by: JTA | Checked by: NDB

ATTERBERG LIMITS

BEAR VALLEY ROAD OVERHEAD
AT BNSF RAILROAD
CITYOF VICTORVILLE, CALIFORNIA

FEB 2017 | PROJECT NO. A9072-06-01 | FIG. B10

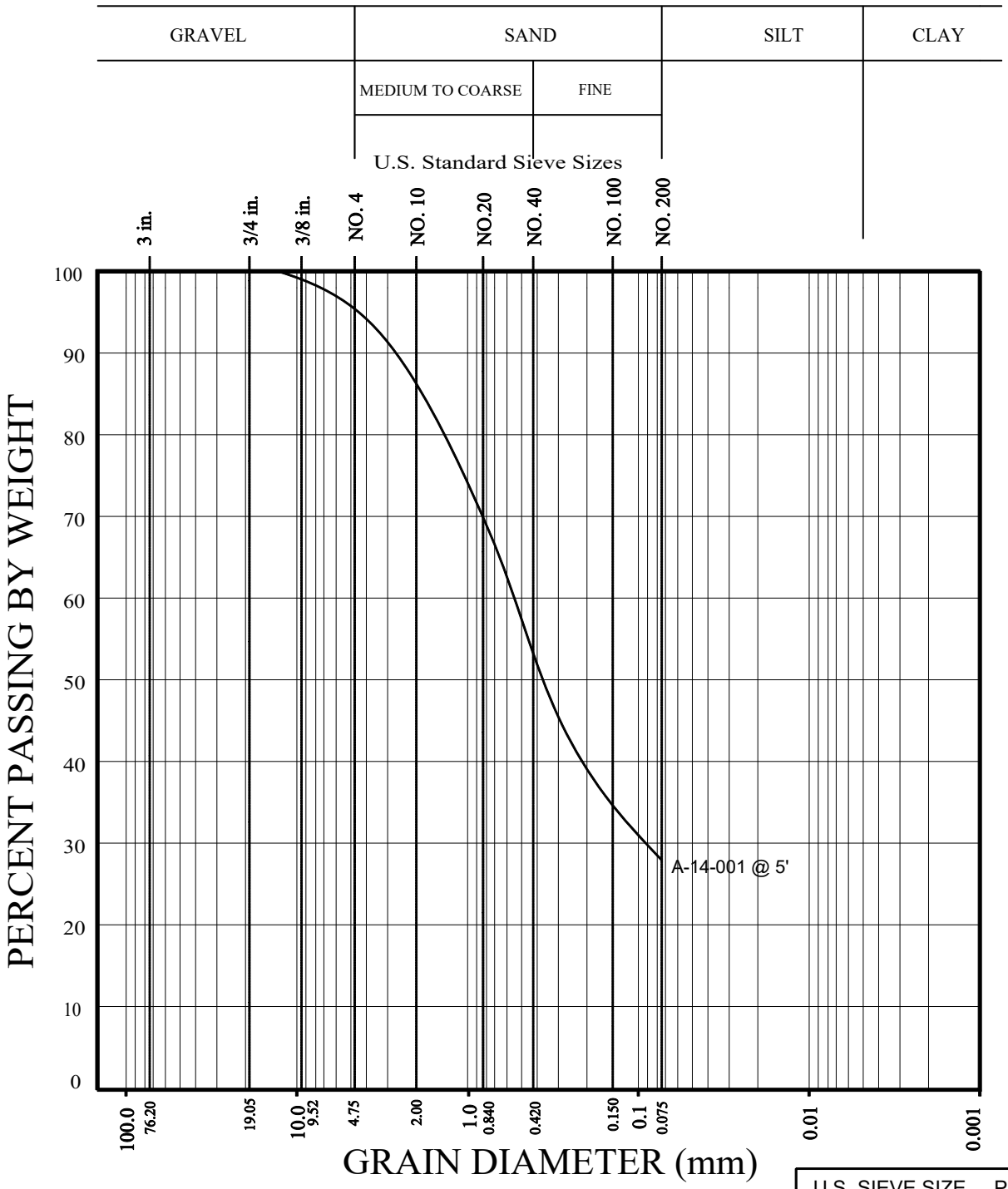

U.S. SIEVE SIZE	PERCENT
GRAVEL	5
SAND	67
FINES	28

GEOCON
WEST, INC.
ENVIRONMENTAL GEOTECHNICAL MATERIALS
3303 N. SAN FERNANDO BLVD. - SUITE 100 - BURBANK, CA 91504
PHONE (818) 841-8388 - FAX (818) 841-1704

GRAIN SIZE DISTRIBUTION

BEAR VALLEY ROAD OVERHEAD
AT BNSF RAILROAD
CITYOF VICTORVILLE, CALIFORNIA

Drafted by: JTA	Checked by: NDB	FEB 2017	PROJECT NO. A9072-06-01	FIG. B11

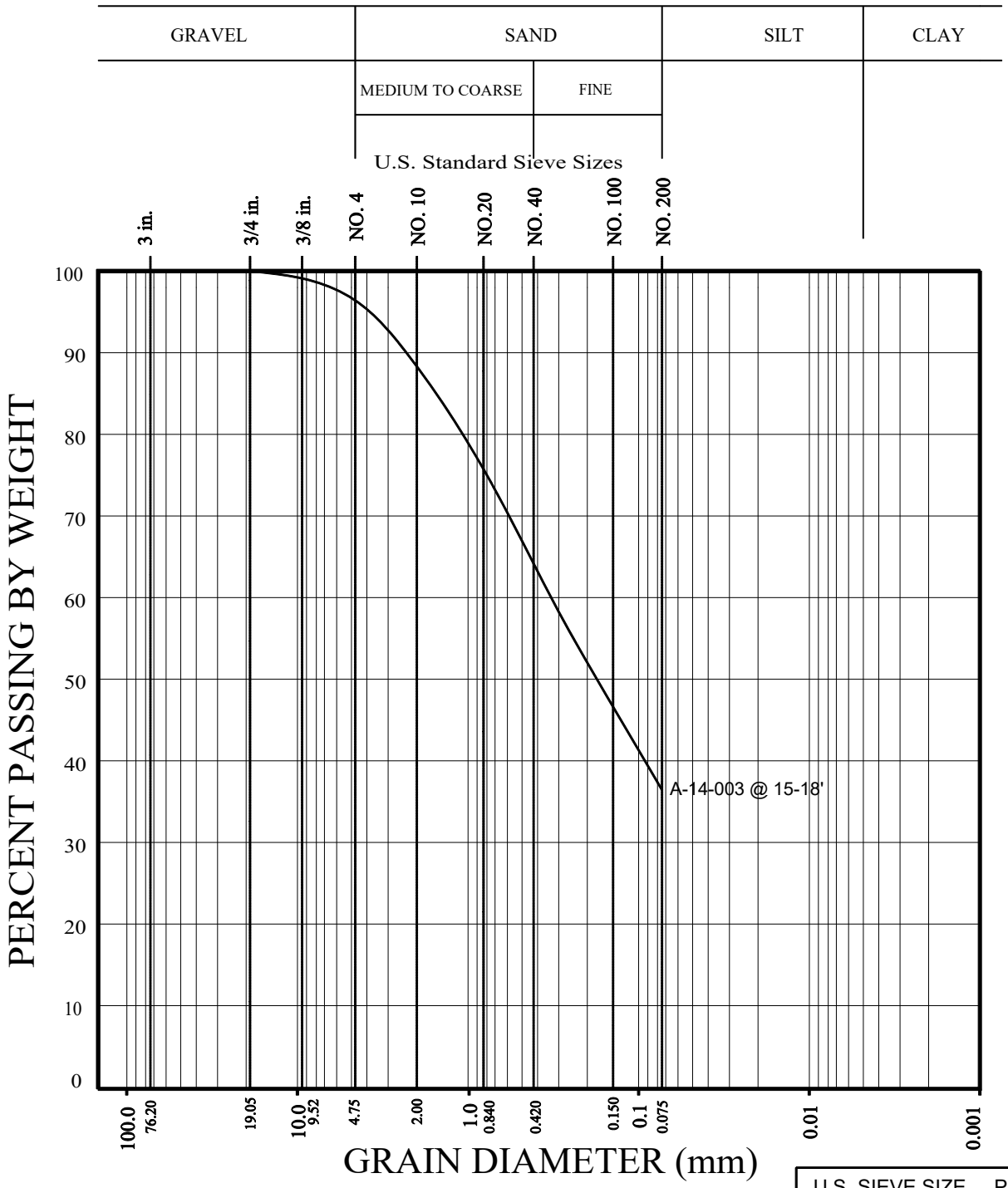

U.S. SIEVE SIZE	PERCENT
GRAVEL	4
SAND	60
FINES	36

GEOCON
WEST, INC.
ENVIRONMENTAL GEOTECHNICAL MATERIALS
3303 N. SAN FERNANDO BLVD. - SUITE 100 - BURBANK, CA 91504
PHONE (818) 841-8388 - FAX (818) 841-1704

GRAIN SIZE DISTRIBUTION

BEAR VALLEY ROAD OVERHEAD
AT BNSF RAILROAD
CITYOF VICTORVILLE, CALIFORNIA

Drafted by: JTA	Checked by: NDB	FEB 2017	PROJECT NO. A9072-06-01	FIG. B12

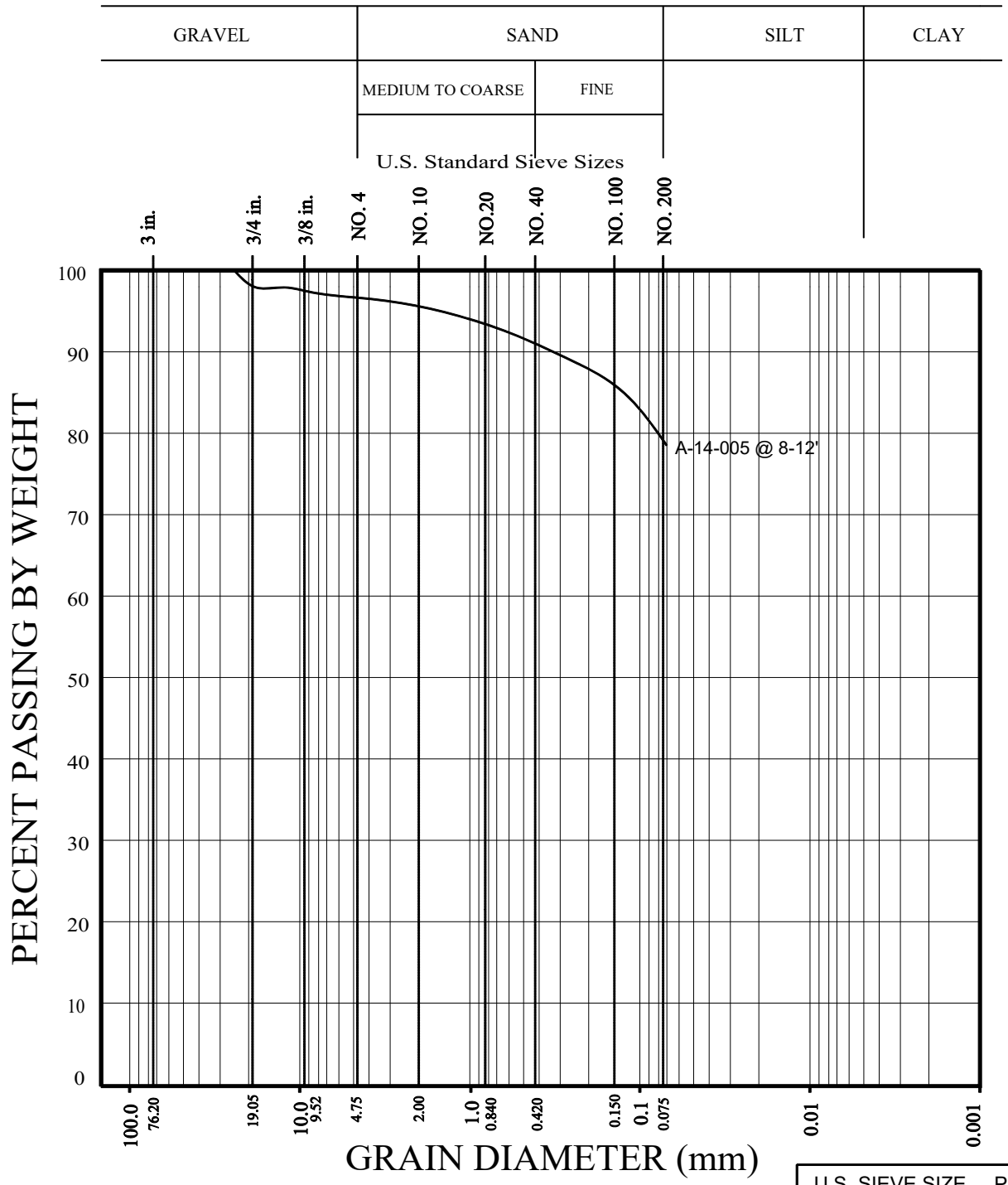

U.S. SIEVE SIZE	PERCENT
GRAVEL	3
SAND	18
FINES	79

GEOCON
WEST, INC.

ENVIRONMENTAL GEOTECHNICAL MATERIALS
3303 N. SAN FERNANDO BLVD. - SUITE 100 - BURBANK, CA 91504
PHONE (818) 841-8388 - FAX (818) 841-1704

GRAIN SIZE DISTRIBUTION

BEAR VALLEY ROAD OVERHEAD
AT BNSF RAILROAD
CITYOF VICTORVILLE, CALIFORNIA

Drafted by: JTA	Checked by: NDB	FEB 2017	PROJECT NO. A9072-06-01	FIG. B13

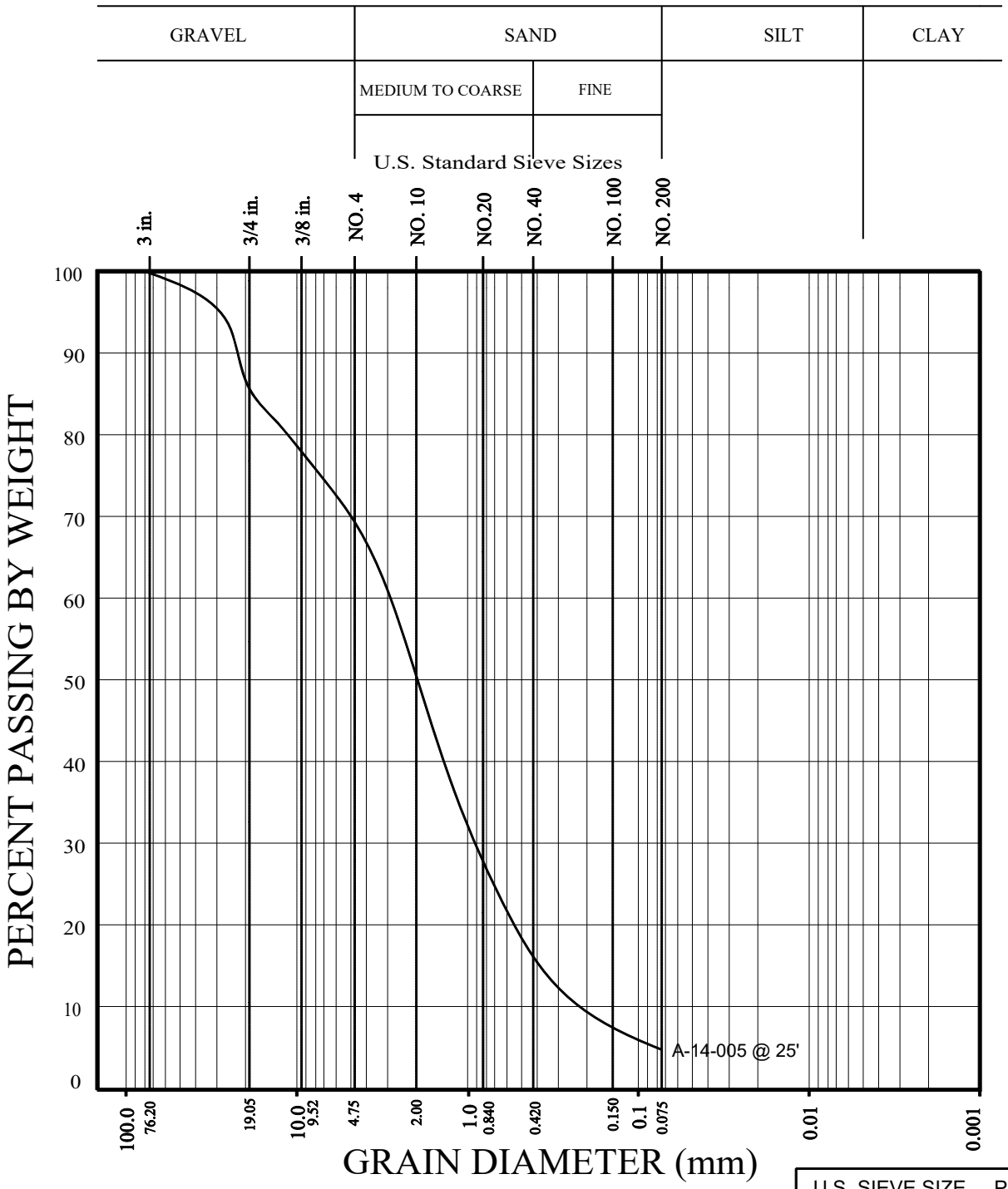

U.S. SIEVE SIZE	PERCENT
GRAVEL	31
SAND	64
FINES	5

GEOCON
WEST, INC.
ENVIRONMENTAL GEOTECHNICAL MATERIALS
3303 N. SAN FERNANDO BLVD. - SUITE 100 - BURBANK, CA 91504
PHONE (818) 841-8388 - FAX (818) 841-1704

GRAIN SIZE DISTRIBUTION

BEAR VALLEY ROAD OVERHEAD
AT BNSF RAILROAD
CITYOF VICTORVILLE, CALIFORNIA

Drafted by: JTA	Checked by: NDB	FEB 2017	PROJECT NO. A9072-06-01	FIG. B14

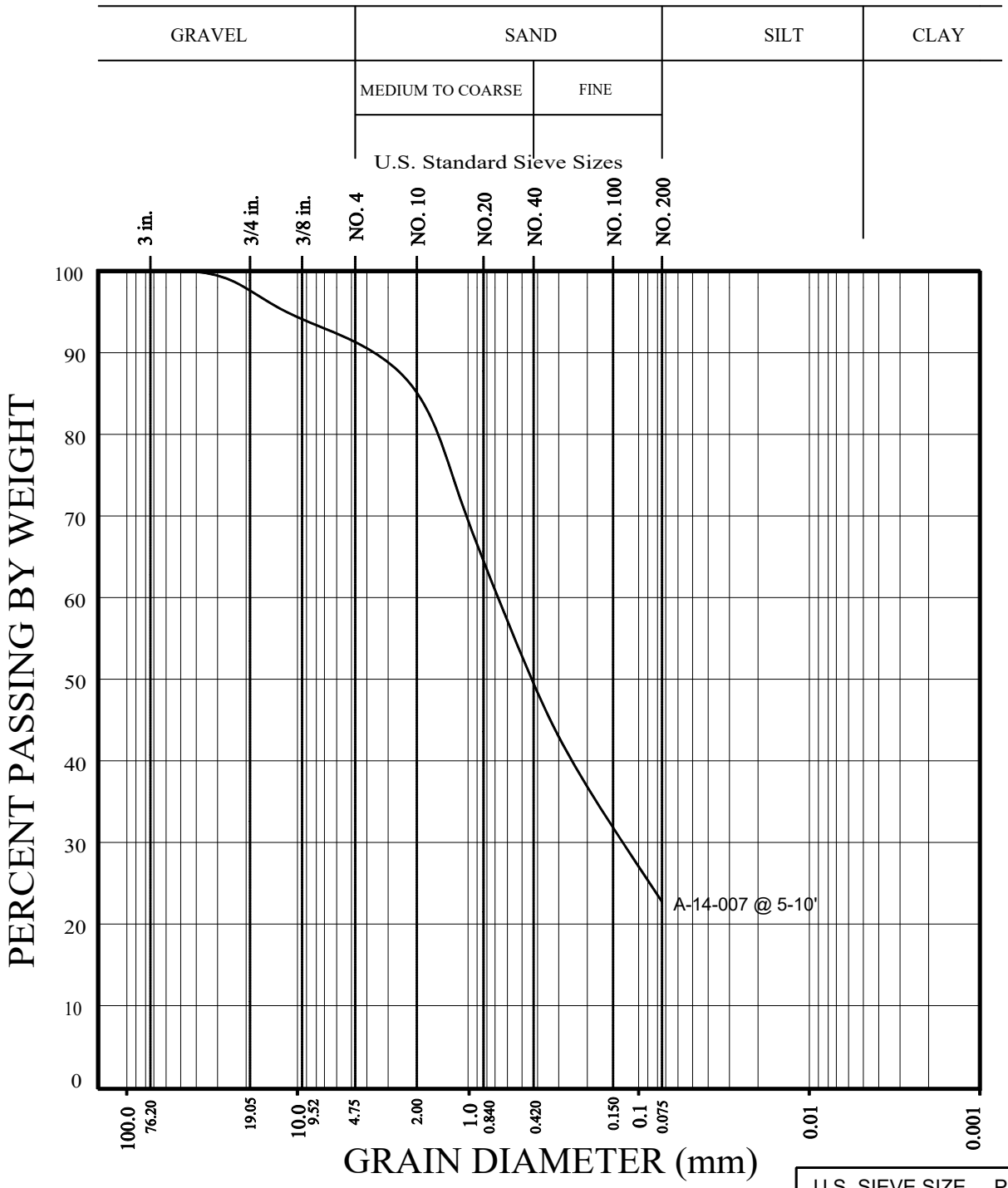

U.S. SIEVE SIZE	PERCENT
GRAVEL	9
SAND	68
FINES	23

GEOCON
WEST, INC.
ENVIRONMENTAL GEOTECHNICAL MATERIALS
3303 N. SAN FERNANDO BLVD. - SUITE 100 - BURBANK, CA 91504
PHONE (818) 841-8388 - FAX (818) 841-1704

GRAIN SIZE DISTRIBUTION

BEAR VALLEY ROAD OVERHEAD
AT BNSF RAILROAD
CITYOF VICTORVILLE, CALIFORNIA

Drafted by: JTA	Checked by: NDB	FEB 2017	PROJECT NO. A9072-06-01	FIG. B15

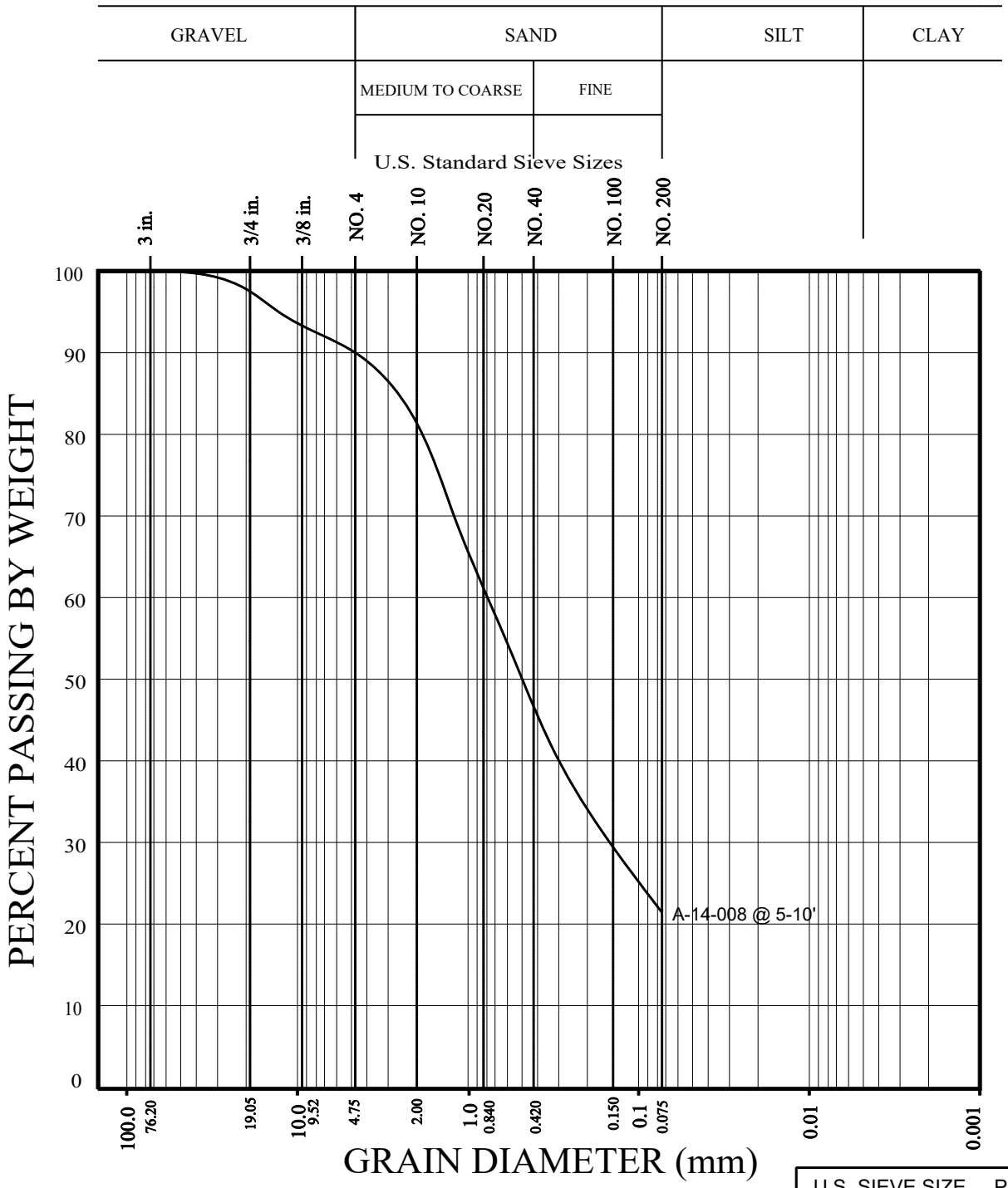

U.S. SIEVE SIZE	PERCENT
GRAVEL	10
SAND	69
FINES	21

GEOCON
WEST, INC.
ENVIRONMENTAL GEOTECHNICAL MATERIALS
3303 N. SAN FERNANDO BLVD. - SUITE 100 - BURBANK, CA 91504
PHONE (818) 841-8388 - FAX (818) 841-1704

GRAIN SIZE DISTRIBUTION

BEAR VALLEY ROAD OVERHEAD
AT BNSF RAILROAD
CITYOF VICTORVILLE, CALIFORNIA

Drafted by: JTA	Checked by: NDB	FEB 2017	PROJECT NO. A9072-06-01	FIG. B16

SUMMARY OF LABORATORY EXPANSION INDEX TEST RESULTS
ASTM D 4829-11

Sample No.	Moisture Content (%)		Dry Density (pcf)	Expansion Index	*UBC Classification	**CBC Classification
	Before	After				
A-14-002 @ 0-2'	7.4	12.2	118.0	1	Very Low	Non Expansive
A-14-003 @ 0-2'	7.3	11.5	119.1	0	Very Low	Non Expansive
A-14-005 @ 3'	8.6	18.0	109.1	3	Very Low	Non Expansive

* Reference: 1997 Uniform Building Code, Table 18-I-B.

** Reference: 2016 California Building Code, Section 1803.5.3

SUMMARY OF LABORATORY MAXIMUM DENSITY AND AND OPTIMUM MOISTURE CONTENT TEST RESULTS
ASTM D 1557-12

Sample No.	Soil Description	Maximum Dry Density (pcf)	Optimum Moisture (%)
A-14-002 @ 0-2'	Pale Brown Sand with Silt	134.1	7.6
A-14-003 @ 0-2'	Olive Brown Silty Sand	134.9	7.3
A-14-005 @ 8-12'	Olive Brown Sandy Silt	119.0	14.0
A-14-006 @ 0-5'	Olive Brown Silty Sand	134.0	7.0

SUMMARY OF LABORATORY R-VALUE TEST RESULTS
ASTM D 2844-13

Sample No.	Soil Description	R-Value
A-14-002 @ 0-2'	Brown Silty Sand	52
A-14-003 @ 0-2'	Olive Brown Silty Sand	53

GEOCON WEST, INC.
ENVIRONMENTAL GEOTECHNICAL MATERIALS
3303 N. SAN FERNANDO BLVD. - SUITE 100 - BURBANK, CA 91504
PHONE (818) 841-8388 - FAX (818) 841-1704

LABORATORY TEST RESULTS

BEAR VALLEY ROAD OVERHEAD
AT BNSF RAILROAD
CITYOF VICTORVILLE, CALIFORNIA

Drafted by: JTA	Checked by: NDB	FEB 2017	PROJECT NO. A9072-06-01	FIG. B17

Project Name: Bear Valley Overhead at BNSF
Location: Victorville, CA

Project No.: A9072-06-01
Sample No.: A-14-002@0-2'

Mold ID	A	B	C
Batch Weight	1200	1200	1200
Humidifying Moisture	48	48	48
Moisture Added	36	42	30
Soil + Mold	2950	2973	3260
Mold	1818	1826	2104
Soil	1132	1147	1156
Foot PSI	350	335	350
Height of Sample	2.41	2.46	2.48
Exudation Pressure	4800	3000	5900
Exudation PSI	380	240	470
Stability Ph	38	75	26
Turns Displacement	4.24	4.60	4.61
R-Value	66	38	74
Corrected R-Value	64	38	74
Thick by Stab./Foot	0.49	0.89	0.37
Expansion Reading	0	0	3
Thick/Exp. Press/Fppt	0.00	0.00	0.10
Moisture Content	9.5	10.0	8.9
Dry Density	130.2	128.3	129.5

Gradation Analysis

	Wt. Ret.	% Ret.
1"	-	0.8
3/4"	300	1
3/8"	835	3.9
#4	1661	7.7
Total	21,503g	

Sample Description:
SM: Brown Silty (F-C) Sand

R Value By Expansion:	82
R Value By Exudation	52
R Value By Equilibrium	**52**

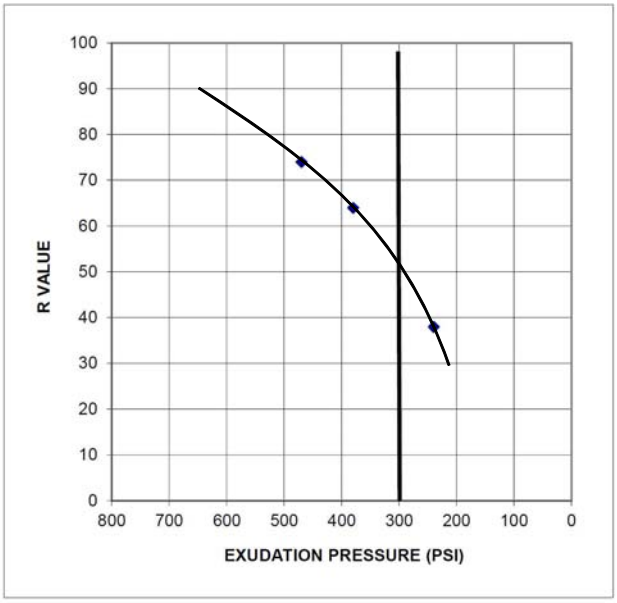

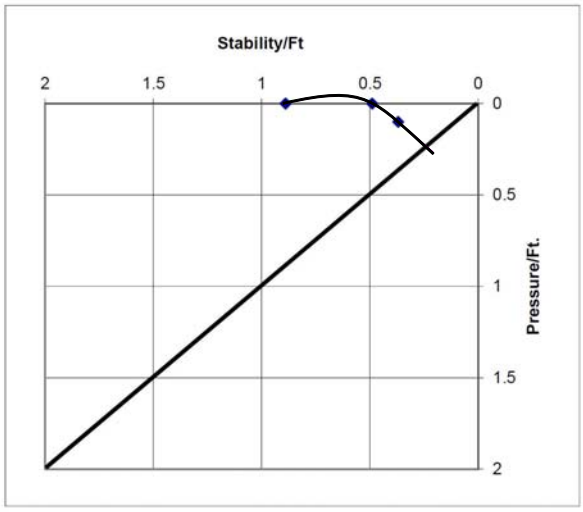

GEOCON WEST, INC.
ENVIRONMENTAL GEOTECHNICAL MATERIALS
3303 N. SAN FERNANDO BLVD. - SUITE 100 - BURBANK, CA 91504
PHONE (818) 841-8388 - FAX (818) 841-1704

R-VALUE TEST RESULTS

BEAR VALLEY ROAD OVERHEAD
AT BNSF RAILROAD
CITYOF VICTORVILLE, CALIFORNIA

JTA		8000	FEB 2017	PROJECT NO. A9072-06-01	FIG. B18

Project Name: Bear Valley Overhead at BNSF
Location: Victorville, CA

Project No.: A9072-06-01
Sample No.: A-14-003@0-2'

Mold ID	D	E	F
Batch Weight	1200	1200	1200
Humidifying Moisture	24	24	24
Moisture Added	48	60	54
Soil + Mold	3007	3082	2974
Mold	1851	1924	1806
Soil	1156	1158	1168
Foot PSI	350	350	350
Height of Sample	2.49	2.49	2.51
Exudation Pressure	9900	3700	4500
Exudation PSI	790	290	360
Stability Ph	19	60	36
Turns Displacement	5.14	4.56	4.74
R-Value	78	48	64
Corrected R-Value	78	48	64
Thick by Stab./Foot	0.32	0.75	0.52
Expansion Reading	0.6	0	0
Thick/Exp. Press/Fppt	0.20	0.00	0.00
Moisture Content	8.4	9.5	8.9
Dry Density	129.7	130.2	129.4

Gradation Analysis

	Wt. Ret.	% Ret.
1"	0	0
3/4"	106	0.5
3/8"	569	2.5
#4	1434	6.4
Total	22,468 g	

Sample Description:
SM- Olive Brown (F-C) Silty Sand with Some Clay

R Value By Expansion:	80
R Value By Exudation	53
R Value By Equilibrium	**53**

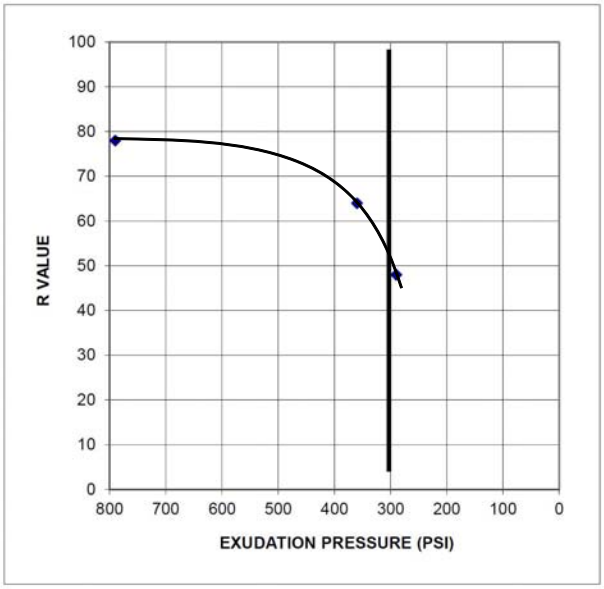

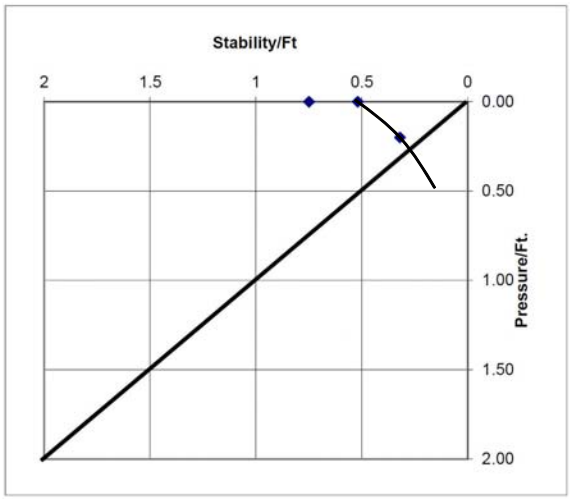

GEOCON WEST, INC.
ENVIRONMENTAL GEOTECHNICAL MATERIALS
3303 N. SAN FERNANDO BLVD. - SUITE 100 - BURBANK, CA 91504
PHONE (818) 841-8388 - FAX (818) 841-1704

R-VALUE TEST RESULTS

BEAR VALLEY ROAD OVERHEAD
AT BNSF RAILROAD
CITYOF VICTORVILLE, CALIFORNIA

JTA		8000	FEB 2017	PROJECT NO. A9072-06-01	FIG. B19

SUMMARY OF LABORATORY POTENTIAL OF HYDROGEN (pH) AND RESISTIVITY TEST RESULTS CALIFORNIA TEST NO. 643

Sample No.	pH	Resistivity (ohm centimeters)
A-14-005 @ 3'	7.63	3100
A-14-006 @ 0-5'	8.26	2600

SUMMARY OF LABORATORY CHLORIDE CONTENT TEST RESULTS EPA NO. 325.3

Sample No.	Chloride Ion Content (%)
A-14-005 @ 3'	0.001
A-14-006 @ 0-5'	0.004

SUMMARY OF LABORATORY WATER SOLUBLE SULFATE TEST RESULTS CALIFORNIA TEST NO. 417

Sample No.	Water Soluble Sulfate (% SO_4)	Sulfate Exposure*
A-14-005 @ 3'	0.000	Negligible
A-14-006 @ 0-5'	0.000	Negligible

* Reference: 2016 California Building Code, Section 1904.3 and ACI 318-11 Section 4.3.

GEOCON WEST, INC.
ENVIRONMENTAL GEOTECHNICAL MATERIALS
3303 N. SAN FERNANDO BLVD. - SUITE 100 - BURBANK, CA 91504
PHONE (818) 841-8388 - FAX (818) 841-1704

CORROSIVITY TEST RESULTS

BEAR VALLEY ROAD OVERHEAD
AT BNSF RAILROAD
CITYOF VICTORVILLE, CALIFORNIA

Drafted by: JTA	Checked by: NDB	FEB 2017	PROJECT NO. A9072-06-01	FIG. B20

APPENDIX C

APPENDIX C

LOG OF TEST BORING (LOTB) SHEETS

FOR

BEAR VALLEY OVERHEAD AT BNSF RAILROAD
VICTORVILLE, CALIFORNIA

PROJECT NO. A9072-06-01

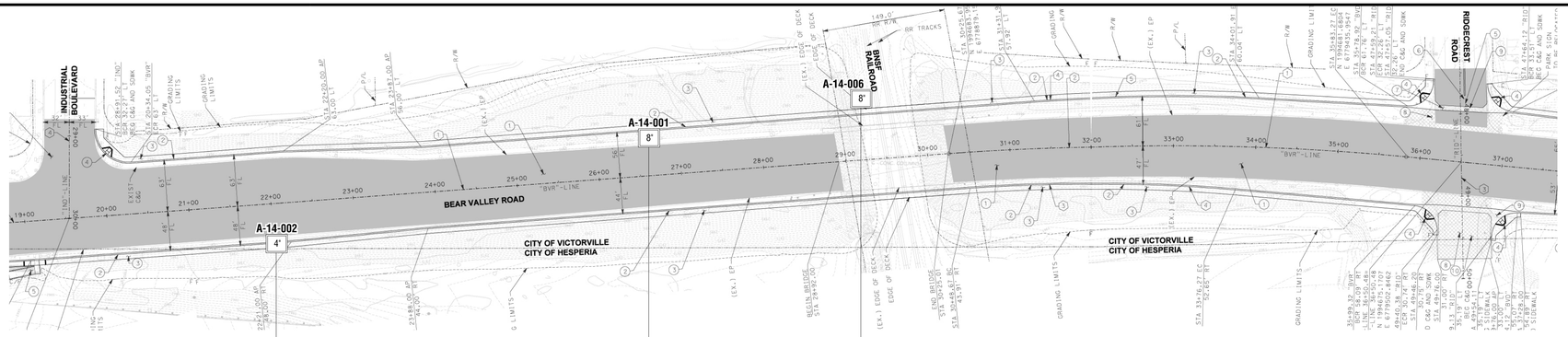

PLAN

SCALE: 1" = 80'

NOTES:

1. The consistency/apparent density descriptions are from Figures 2-9 and 2-10 of the Caltrans "Soil and Rock Logging, Classification, and Presentation Manual". These descriptors are based upon the Standard Penetration Test (ASTM D 1586)(corrected for Hammer Energy Ratio and the Modified California sampling method (ASTM D 3550). The descriptors based on the Mod Cal blow counts have been correlated to SPT blow counts based on a correction factor of 0.55 (Rogers, 2006).

2. Relatively undisturbed soil samples were obtained by driving a 3-inch outside diameter, with a 2.5-inch inside diameter (California Modified) split-spoon sampler for Modified California Sampling Methods and a 2-inch outside diameter split-spoon sampler for Standard Penetration Test Sampling Methods.

3. The boring logs and related information represent the opinion of the professional engineer as to the character of the material at the locations shown. Soil and groundwater conditions between adjacent test holes and at other locations may differ from those shown. Groundwater conditions may change with passage of time.

4. Test boring elevations are approximate based on topographic base sheet mapping prepared for this project.

5. Test boring locations were determined in the field based on staking and pacing from mapped site features. The locations of the explorations should be considered accurate only to the degree implied by the measuring methods used.

6. A 140-pound automatic hammer falling 30 inches was used to drive samplers.

7. Visual classification of earth materials was based on field inspection and was confirmed or revised with laboratory test results.

8. This LOTB sheet was prepared in accordance with the Caltrans Soil & Rock Logging, Classification, and Presentation Manual (2010).

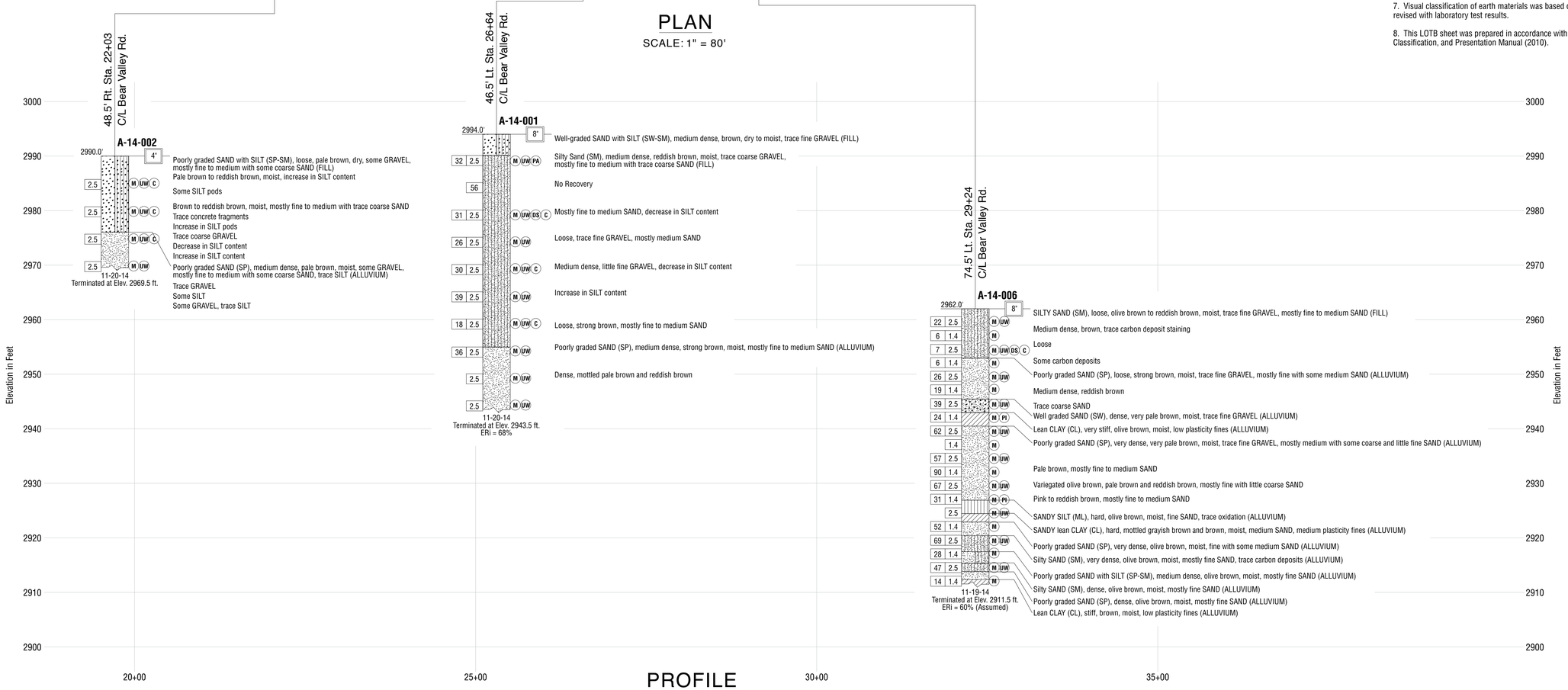

PROFILE

HORIZONTAL SCALE: 1" = 80'
VERTICAL SCALE: 1" = 10'

NO.	REVISION	BY	DATE

DESIGNED: JELISA THOMAS
DRAWN: DIRK HANSEN
CHECKED: JELISA THOMAS

RECORD DRAWING DATE:
SCALE HORIZ: 80' VERT: 10'
PROJECT NO. XXXXX
CAD FILE: ...\511\2007_AB1.dgn

CITY OF VICTORVILLE
ENGINEERING DIVISION
14343 CIVIC DRIVE,
VICTORVILLE, CA 92392
(760) 955-5158

DOKKEN ENGINEERING
110 BLUE RAVINE ROAD SUITE 200, FOLSOM CA. 916-858-0642

JUANN RAMOS, PROJECT ENGINEER — DATE

REGISTERED PROFESSIONAL ENGINEER
JELISA THOMAS
NO.
CIVIL
STATE OF CALIFORNIA

BEAR VALLEY ROAD OH AT BNSF RAILROAD

LOG OF TEST BORINGS

Appendix C

DWG. NO.

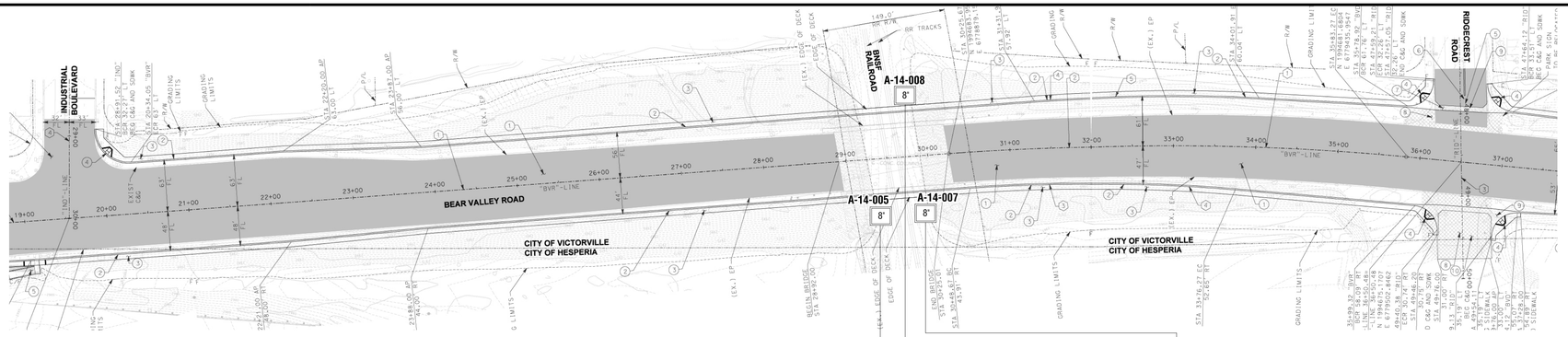

PLAN

SCALE: 1" = 80'

NOTES:

1. The consistency/apparent density descriptions are from Figures 2-9 and 2-10 of the Caltrans "Soil and Rock Logging, Classification, and Presentation Manual". These descriptors are based upon the Standard Penetration Test (ASTM D 1586)(corrected for Hammer Energy Ratio and the Modified California sampling method (ASTM D 3550). The descriptors based on the Mod Cal blow counts have been correlated to SPT blow counts based on a correction factor of 0.55 (Rogers, 2006).

2. Relatively undisturbed soil samples were obtained by driving a 3-inch outside diameter, with a 2.5-inch inside diameter (California Modified) split-spoon sampler for Modified California Sampling Methods and a 2-inch outside diameter split-spoon sampler for Standard Penetration Test Sampling Methods.

3. The boring logs and related information represent the opinion of the professional engineer as to the character of the material at the locations shown. Soil and groundwater conditions between adjacent test holes and at other locations may differ from those shown. Groundwater conditions may change with passage of time.

4. Test boring elevations are approximate based on topographic base sheet mapping prepared for this project.

5. Test boring locations were determined in the field based on staking and pacing from mapped site features. The locations of the explorations should be considered accurate only to the degree implied by the measuring methods used.

6. A 140-pound automatic hammer falling 30 inches was used to drive samplers.

7. Visual classification of earth materials was based on field inspection and was confirmed or revised with laboratory test results.

8. This LOTB sheet was prepared in accordance with the Caltrans Soil & Rock Logging, Classification, and Presentation Manual (2010).

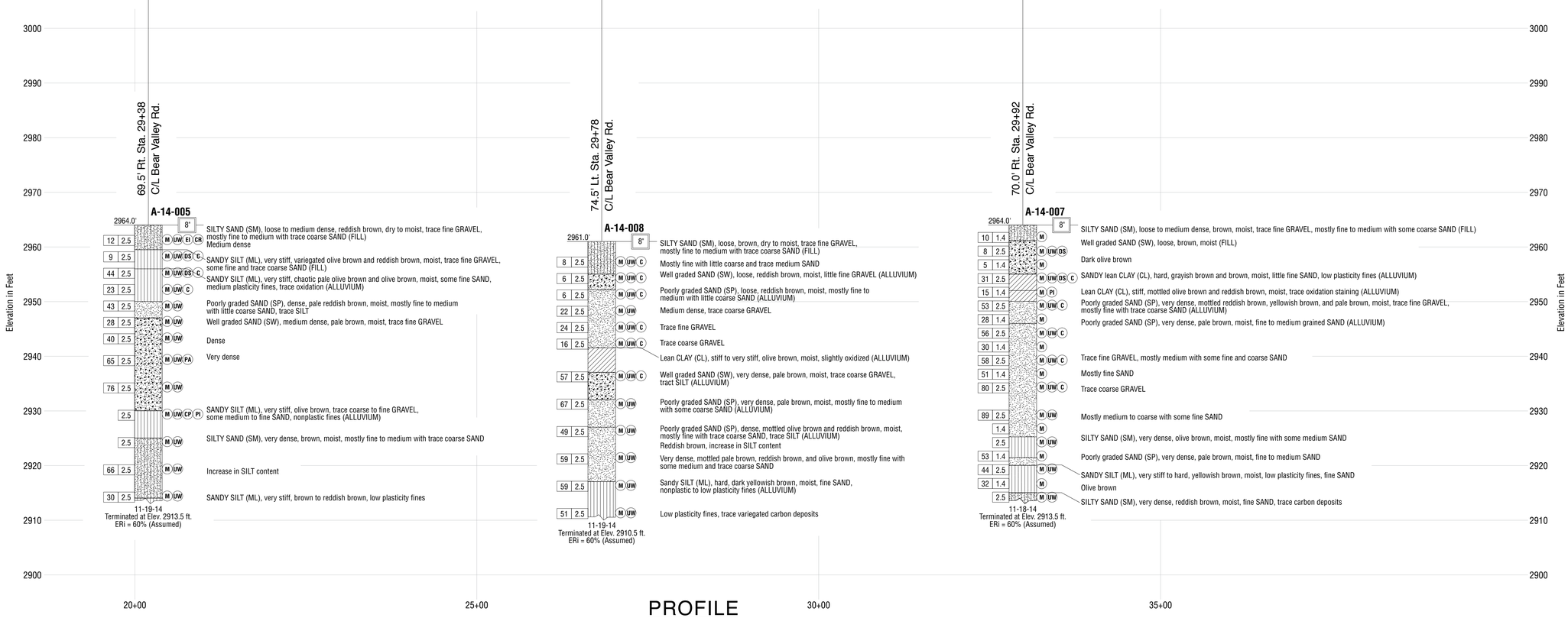

PROFILE

HORIZONTAL SCALE: 1" = 80'
VERTICAL SCALE: 1" = 10'

NO.	REVISION	BY	DATE

DESIGNED: JELISA THOMAS
DRAWN: DIRK HANSEN
CHECKED: JELISA THOMAS

RECORD DRAWING DATE:
SCALE HORIZ: 80' VERT: 10'
PROJECT NO. XXXXX
CAD FILE: ...\511\2007_AB1.dgn

CITY OF VICTORVILLE
ENGINEERING DIVISION
14343 CIVIC DRIVE,
VICTORVILLE, CA 92392
(760) 955-5158

DOKKEN ENGINEERING
110 BLUE RAVINE ROAD SUITE 200, FOLSOM CA. 916-858-0642

JUANN RAMOS, PROJECT ENGINEER
DATE

REGISTERED PROFESSIONAL ENGINEER
JELISA THOMAS
NO.
CIVIL
STATE OF CALIFORNIA

BEAR VALLEY ROAD OH AT BNSF RAILROAD

LOG OF TEST BORINGS

2 OF 5

Appendix C

DWG. NO.

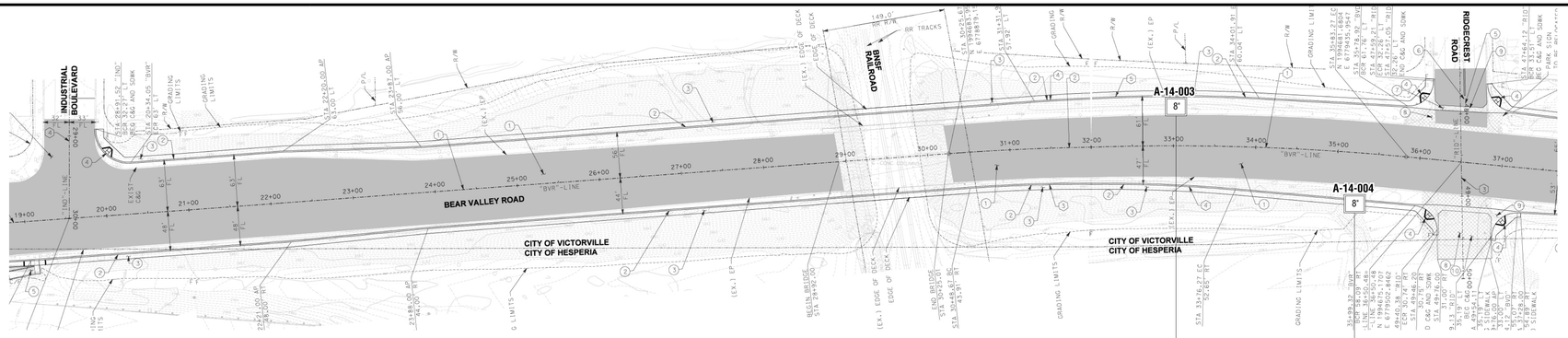

PLAN

SCALE: 1" = 80'

NOTES:

1. The consistency/apparent density descriptions are from Figures 2-9 and 2-10 of the Caltrans "Soil and Rock Logging, Classification, and Presentation Manual". These descriptors are based upon the Standard Penetration Test (ASTM D 1586)(corrected for Hammer Energy Ratio and the Modified California sampling method (ASTM D 3550). The descriptors based on the Mod Cal blow counts have been correlated to SPT blow counts based on a correction factor of 0.55 (Rogers, 2006).

2. Relatively undisturbed soil samples were obtained by driving a 3-inch outside diameter, with a 2.5-inch inside diameter (California Modified) split-spoon sampler for Modified California Sampling Methods and a 2-inch outside diameter split-spoon sampler for Standard Penetration Test Sampling Methods.

3. The boring logs and related information represent the opinion of the professional engineer as to the character of the material at the locations shown. Soil and groundwater conditions between adjacent test holes and at other locations may differ from those shown. Groundwater conditions may change with passage of time.

4. Test boring elevations are approximate based on topographic base sheet mapping prepared for this project.

5. Test boring locations were determined in the field based on staking and pacing from mapped site features. The locations of the explorations should be considered accurate only to the degree implied by the measuring methods used.

6. A 140-pound automatic hammer falling 30 inches was used to drive samplers.

7. Visual classification of earth materials was based on field inspection and was confirmed or revised with laboratory test results.

8. This LOTB sheet was prepared in accordance with the Caltrans Soil & Rock Logging, Classification, and Presentation Manual (2010).

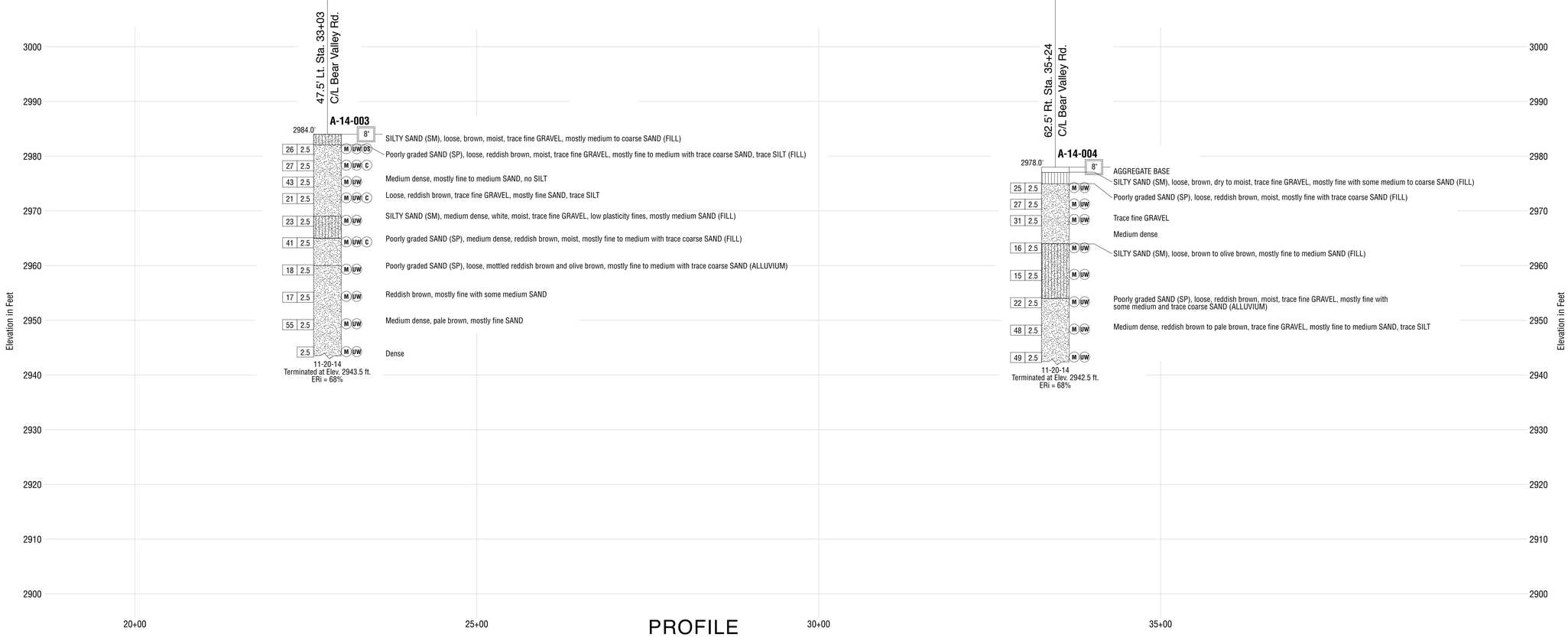

PROFILE

HORIZONTAL SCALE: 1" = 80'
VERTICAL SCALE: 1" = 10'

NO.	REVISION	BY	DATE

DESIGNED: JELISA THOMAS
DRAWN: DIRK HANSEN
CHECKED: JELISA THOMAS

RECORD DRAWING DATE:
SCALE HORIZ: 80' VERT: 10'
PROJECT NO. XXXXX
CAD FILE: ...\511\2007_AB1.dgn

CITY OF VICTORVILLE
ENGINEERING DIVISION
14343 CIVIC DRIVE,
VICTORVILLE, CA 92392
(760) 955-5158

DOKKEN ENGINEERING
110 BLUE RAVINE ROAD SUITE 200, FOLSOM CA. 916-858-0642

JUANN RAMOS, PROJECT ENGINEER
DATE

REGISTERED PROFESSIONAL ENGINEER
JELISA THOMAS
NO.
CIVIL
STATE OF CALIFORNIA

BEAR VALLEY ROAD OH AT BNSF RAILROAD

LOG OF TEST BORINGS

3 OF 5

Appendix C

DWG. NO.

REFERENCE: CALTRANS SOIL & ROCK LOGGING, CLASSIFICATION, AND PRESENTATION MANUAL (2010)

CEMENTATION

Description	Criteria
Weak	Crumbles or breaks with handling or little finger pressure.
Moderate	Crumbles or breaks with considerable finger pressure.
Strong	Will not crumble or break with finger pressure.

BOREHOLE IDENTIFICATION

Symbol	Hole Type	Description
Size	A	Auger Boring (hollow or solid stem bucket)
Size	R RW RC P	Rotary drilled boring (conventional) Rotary drilled with self-casing wire-line Rotary core with continuously-sampled, self-casing wire-line Rotary percussion boring (air)
Size	R	Rotary drilled diamond core
Size	HD HA	Hand driven (1-inch soil tube) Hand Auger
●	D	Dynamic Cone Penetration Boring
▲	CPT	Cone Penetration Test (ASTM D 5778)
[ ]	O	Other (note on LOTB)

Note: Size in inches.

CONSISTENCY OF COHESIVE SOILS

Description	Shear Strength (tsf)	Pocket Penetrometer Measurement, PP, (tsf)	Torvane Measurement, TV, (tsf)	Vane Shear Measurement, VS, (tsf)
Very Soft	Less than 0.12	Less than 0.25	Less than 0.12	Less than 0.12
Soft	0.12 - 0.25	0.25 - 0.5	0.12 - 0.25	0.12 - 0.25
Medium Stiff	0.25 - 0.5	0.5 - 1	0.25 - 0.5	0.25 - 0.5
Stiff	0.5 - 1	1 - 2	0.5 - 1	0.5 - 1
Very Stiff	1 - 2	2 - 4	1 - 2	1 - 2
Hard	Greater than 2	Greater than 4	Greater than 2	Greater than 2

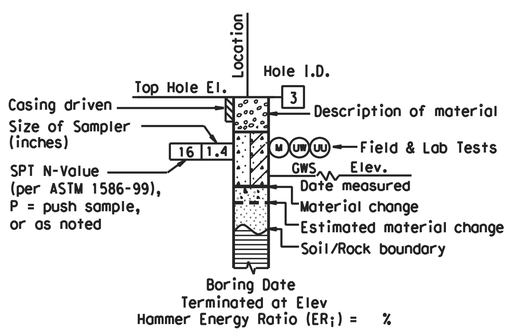

ROTARY BORING

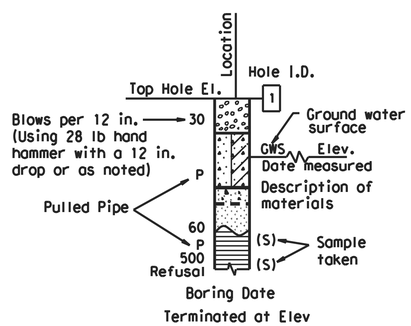

HAND BORING

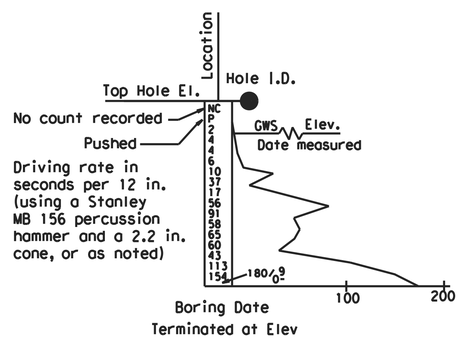

DYNAMIC CONE PENETRATION BORING

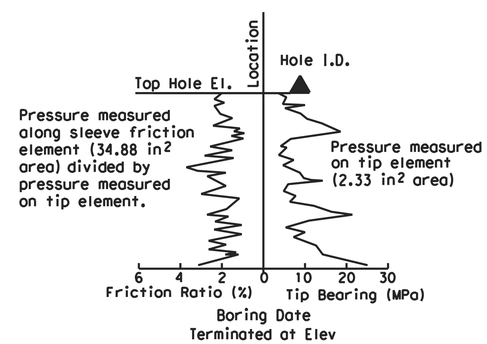

CONE PENETRATION TEST (CPT) BORING

NO.	REVISION	BY	DATE

DESIGNED: JELISA THOMAS
DRAWN: DIRK HANSEN
CHECKED: JELISA THOMAS

RECORD DRAWING DATE:
SCALE HORIZ: 80' VERT: 10'
PROJECT NO. XXXXX
CAD FILE: ...\511\2007_AB1.dgn

CITY OF VICTORVILLE
ENGINEERING DIVISION
14343 CIVIC DRIVE,
VICTORVILLE, CA 92392
(760) 955-5158

DOKKEN ENGINEERING
110 BLUE RAVINE ROAD SUITE 200, FOLSOM CA. 916-858-0642

JUANN RAMOS, PROJECT ENGINEER
DATE

REGISTERED PROFESSIONAL ENGINEER
JELISA THOMAS
NO.
CIVIL
STATE OF CALIFORNIA

BEAR VALLEY ROAD OH AT BNSF RAILROAD

LOG OF TEST BORINGS

4 OF 5

Appendix C

DWG. NO.

REFERENCE: CALTRANS SOIL & ROCK LOGGING, CLASSIFICATION, AND PRESENTATION MANUAL (2010)

GROUP SYMBOLS AND NAMES

Graphic/Symbol	Group Names
GW	Well-graded GRAVEL Well-graded GRAVEL with SAND
GP	Poorly-graded GRAVEL Poorly-graded GRAVEL with SAND
GW-GM	Well-graded GRAVEL with SILT Well-graded GRAVEL with SILT and SAND
GW-GC	Well-graded GRAVEL with CLAY (or SILTY CLAY) Well-graded GRAVEL with CLAY and SAND (or SILTY CLAY and SAND)
GP-GM	Poorly-graded GRAVEL with SILT Poorly-graded GRAVEL with SILT and SAND
GP-GC	Poorly-graded GRAVEL with CLAY (or SILTY CLAY) Poorly-graded GRAVEL with CLAY and SAND (or SILTY CLAY and SAND)
GM	SILTY GRAVEL SILTY GRAVEL with SAND
GC	CLAYEY GRAVEL CLAYEY GRAVEL with SAND
GC-GM	SILTY, CLAYEY GRAVEL SILTY, CLAYEY GRAVEL with SAND
SW	Well-graded SAND Well-graded SAND with GRAVEL
SP	Poorly-graded SAND Poorly-graded SAND with GRAVEL
SW-SM	Well-graded SAND with SILT Well-graded SAND with SILT and GRAVEL
SW-SC	Well-graded SAND with CLAY (or SILTY CLAY) Well-graded SAND with CLAY and GRAVEL (or SILTY CLAY and GRAVEL)
SP-SM	Poorly-graded SAND with SILT Poorly-graded SAND with SILT and GRAVEL
SP-SC	Poorly-graded SAND with CLAY (or SILTY CLAY) Poorly-graded SAND with CLAY and GRAVEL (or SILTY CLAY and GRAVEL)
SM	SILTY SAND SILTY SAND with GRAVEL
SC	CLAYEY SAND CLAYEY SAND with GRAVEL
SC-SM	SILTY, CLAYEY SAND SILTY, CLAYEY SAND with GRAVEL
PT	PEAT
	COBBLES COBBLES and BOULDERS BOULDERS

Graphic/Symbol	Group Names
CL	Lean CLAY Lean CLAY with SAND Lean CLAY with GRAVEL SANDY lean CLAY SANDY lean CLAY with GRAVEL GRAVELLY lean CLAY GRAVELLY lean CLAY with SAND
CL-ML	SILTY CLAY SILTY CLAY with SAND SILTY CLAY with GRAVEL SANDY SILTY CLAY SANDY SILTY CLAY with GRAVEL GRAVELLY SILTY CLAY GRAVELLY SILTY CLAY with SAND
ML	SILT SILT with SAND SILT with GRAVEL SANDY SILT SANDY SILT with GRAVEL GRAVELLY SILT GRAVELLY SILT with SAND
OL	ORGANIC lean CLAY ORGANIC lean CLAY with SAND ORGANIC lean CLAY with GRAVEL SANDY ORGANIC lean CLAY SANDY ORGANIC lean CLAY with GRAVEL GRAVELLY ORGANIC lean CLAY GRAVELLY ORGANIC lean CLAY with SAND
OL	ORGANIC SILT ORGANIC SILT with SAND ORGANIC SILT with GRAVEL SANDY ORGANIC SILT SANDY ORGANIC SILT with GRAVEL GRAVELLY ORGANIC SILT GRAVELLY ORGANIC SILT with SAND
CH	Fat CLAY Fat CLAY with SAND Fat CLAY with GRAVEL SANDY fat CLAY SANDY fat CLAY with GRAVEL GRAVELLY fat CLAY GRAVELLY fat CLAY with SAND
MH	Elastic SILT Elastic SILT with SAND Elastic SILT with GRAVEL SANDY elastic SILT SANDY elastic SILT with GRAVEL GRAVELLY elastic SILT GRAVELLY elastic SILT with SAND
OH	ORGANIC fat CLAY ORGANIC fat CLAY with SAND ORGANIC fat CLAY with GRAVEL SANDY ORGANIC fat CLAY SANDY ORGANIC fat CLAY with GRAVEL GRAVELLY ORGANIC fat CLAY GRAVELLY ORGANIC fat CLAY with SAND
OH	ORGANIC elastic SILT ORGANIC elastic SILT with SAND ORGANIC elastic SILT with GRAVEL SANDY ORGANIC elastic SILT SANDY ORGANIC elastic SILT with GRAVEL GRAVELLY ORGANIC elastic SILT GRAVELLY ORGANIC elastic SILT with SAND
OL/OH	ORGANIC SOIL ORGANIC SOIL with SAND ORGANIC SOIL with GRAVEL SANDY ORGANIC SOIL SANDY ORGANIC SOIL with GRAVEL GRAVELLY ORGANIC SOIL GRAVELLY ORGANIC SOIL with SAND

FIELD AND LABORATORY TESTING

- (C) Consolidation (ASTM D 2435)
- (CL) Collapse Potential (ASTM D 5333)
- (CP) Compaction Curve (CTM 216)
- (CR) Corrosivity Testing (CTM 643, CTM 422, CTM 417)
- (CU) Consolidated Undrained Triaxial (ASTM D 4767)
- (DS) Direct Shear (ASTM D 3080)
- (EI) Expansion Index (ASTM D 4829)
- (M) Moisture Content (ASTM D 2216)
- (OC) Organic Content-% (ASTM D 2974)
- (P) Permeability (CTM 220)
- (PA) Particle Size Analysis (ASTM D 422)
- (PI) Plasticity Index (AASHTO T 90) Liquid Limit (AASHTO T 89)
- (PL) Point Load Index (ASTM D 5731)
- (PM) Pressure Meter
- (R) R-Value (CTM 301)
- (SE) Sand Equivalent (CTM 217)
- (SG) Specific Gravity (AASHTO T 100)
- (SL) Shrinkage Limit (ASTM D 427)
- (SW) Swell Potential (ASTM D 4546)
- (UC) Unconfined Compression-Soil (ASTM D 2166) Unconfined Compression-Rock (ASTM D 2938)
- (UU) Unconsolidated Undrained Triaxial (ASTM D 2850)
- (UW) Unit Weight (ASTM D 4767)

APPARENT DENSITY OF COHESIONLESS SOILS

Description	SPT N_{60} (Blows / 12 in.)
Very Loose	0 - 5
Loose	5 - 10
Medium Dense	10 - 30
Dense	30 - 50
Very Dense	Greater than 50

MOISTURE

Description	Criteria
Dry	No discernable moisture
Moist	Moisture present, but no free water
Wet	Visible free water

PERCENT OR PROPORTION OF SOILS

Description	Criteria
Trace	Particles are present but estimated to be less than 5%
Few	5% - 10%
Little	15% - 25%
Some	30% - 45%
Mostly	50% - 100%

PARTICLE SIZE

Description		Size (in.)
Boulder		Greater than 12
Cobble		3 - 12
Gravel	Coarse	3/4 - 3
	Fine	1/5 - 3/4
Sand	Coarse	1/16 - 1/5
	Medium	1/64 - 1/16
	Fine	1/300 - 1/64
Silt and Clay		Less than 1/300

NO.	REVISION	BY	DATE

DESIGNED: JELISA THOMAS
DRAWN: DIRK HANSEN
CHECKED: JELISA THOMAS

RECORD DRAWING DATE:
SCALE HORIZ: 80' VERT: 10'
PROJECT NO. XXXXX
CAD FILE: ...\511\2007_AB1.dgn

CITY OF VICTORVILLE
ENGINEERING DIVISION
14343 CIVIC DRIVE,
VICTORVILLE, CA 92392
(760) 955-5158

DOKKEN ENGINEERING
110 BLUE RAVINE ROAD SUITE 200, FOLSOM CA. 916-858-0642
JUANN RAMOS, PROJECT ENGINEER DATE

REGISTERED PROFESSIONAL ENGINEER JELISA THOMAS NO. CIVIL STATE OF CALIFORNIA

BEAR VALLEY ROAD OH AT BNSF RAILROAD

LOG OF TEST BORINGS

APPENDIX D

APPENDIX D

AS-BUILT PLANS

FOR

BEAR VALLEY CUTOFF, APATITE STREET TO TAMARISK AVENUE, VICTORVILLE, CALIFORNIA

COUNTY OF SAN BERNARDINO
TRANSPORTATION DEPARTMENT

PLANS FOR CONSTRUCTION ON

BEAR VALLEY CUTOFF — A GRADE SEPARATION WITH A.T. & S.F. RAILWAY

APATITE STREET TO TAMARISK AVENUE

WORK ORDER NO. H05347 ROAD NO. 178700AB

TO BE SUPPLEMENTED BY STANDARD PLANS DATED MARCH 1977
AND SAN BERNARDINO COUNTY STANDARD DRAWINGS

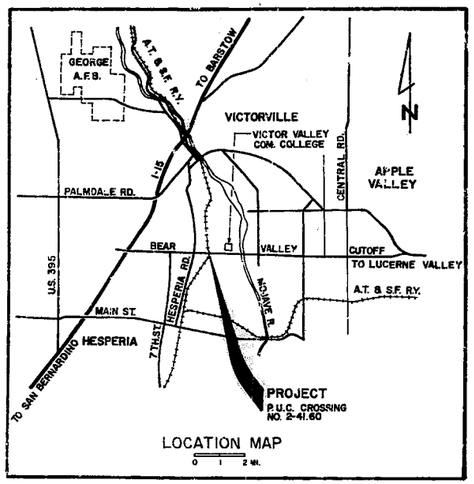

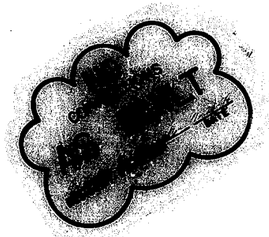

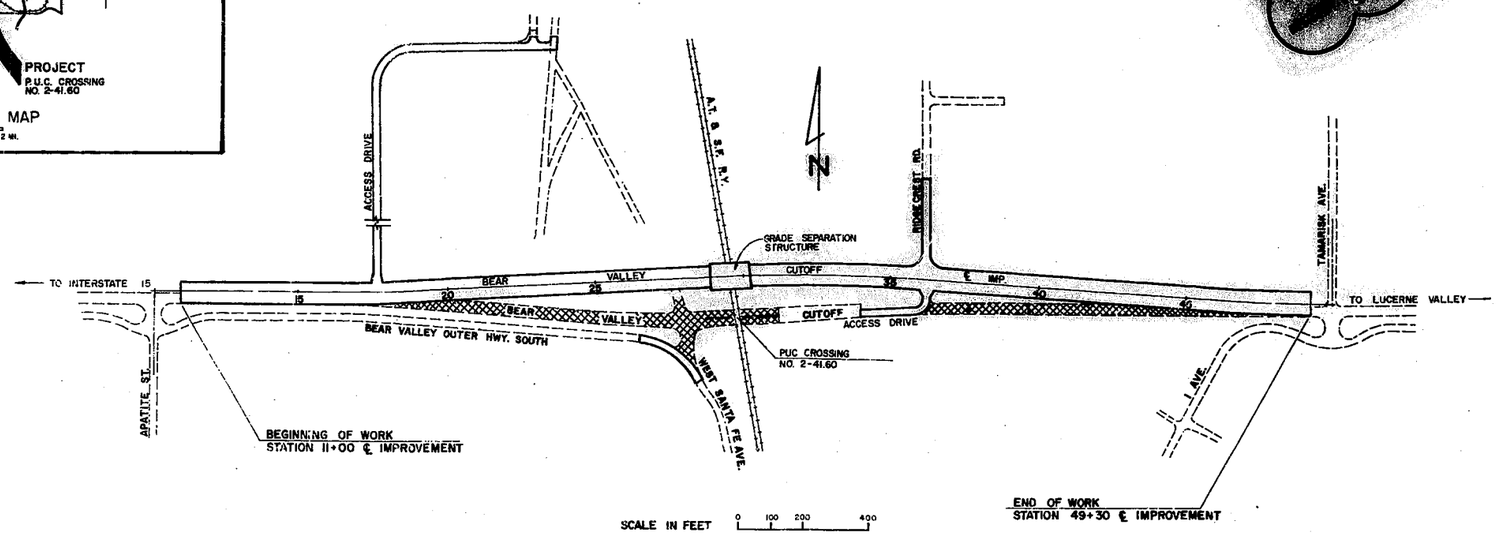

SCALE IN FEET 0 100 200 400

LENGTH OF WORK = 0.73 MILES

INDEX OF SHEETS

SHEET	DESCRIPTION
	ROADWAY
1	TITLE SHEET
2	TYPICAL SECTIONS
3-8	PLANS AND PROFILES
9	CONSTRUCTION DETAILS
10	SUMMARY OF DRAINAGE STRUCTURES AND SUMMARY OF QUANTITIES
11	CONSTRUCTION STAGING DIAGRAMS
12	SINGLE BOX CULVERT DETAILS
13	BOX CULVERT MISC. DETAILS
	STRUCTURE
14	GENERAL PLAN AND ELEVATION
15	LOG OF TEST BORINGS
16	FOUNDATION PLAN AND MISC. DETAILS
17	ABUTMENT 1
18	ABUTMENT 4
19	PIER 2 AND 3
20	DECK PLAN AND GIRDER LAYOUT
21	DECK DETAILS AND MISC. DETAILS
22	PRESTRESSED I GIRDER
23	SLOPE PAVING DETAILS
	CROSS SECTIONS
1-8	BEAR VALLEY CUTOFF
9	ACCESS DRIVE
10	ACCESS DRIVE
11-12	RIDGECREST RD., W. SANTE FE AVE. AND DITCHES

STANDARD PLANS

STATE OF CALIF., BUSINESS AND TRANSPORTATION AGENCY, DEPARTMENT OF TRANSPORTATION, STANDARD PLANS MARCH 1977 EDITION

A62-A3, A62-B8, A62-CA, A62-CB, A62-CC, A62-CD, A73-10, A74-A7, A74-B3, A77-C.8W, A77-E4, A78-A6, A78-B2, A78-C7, B0-3, B0-5, B6-21, B7-10, B11-53, B11-54, D84-3, D88-5, D97-B, D97-C, D97-D

SAN BERNARDINO COUNTY STANDARD DRAWINGS

115, 117, 119, 129, 203, 204, 206, 206 A, 206 B

LINDBERG CONSULTING ENGINEERS
ONTARIO, CALIFORNIA
RCE NO. 15268 DATE 12-8-77

FOR DE LEUW, CATHER & CO. RSE 1209

COUNTY OF SAN BERNARDINO
APPROVED BY _____ 12-28-78
COUNTY ROAD COMMISSIONER RCE 10818 DATE

SHEET NO.	TOTAL SHEETS
1	23

REDUCED PLAN
0 1 2 3
3 INCHES ON ORIGINAL PLAN

173-178
FILE NO. 158700 AB

173-178
FILE NO. 158700 AB

SHEET NO.	SHEETS
2	23

LOCKING CONSULTING ENGINEERS
ONTARIO, CALIFORNIA
D. H. Mayo
RCE NO. 21062 DATE 12-8-77

COUNTY OF SAN BERNARDINO
TRANSPORTATION DEPARTMENT
HESPERIA AREA

BEAR VALLEY CUTOFF

APATITE STREET TO TAMARISK AVENUE

TYPICAL CROSS SECTIONS

W.O. NO. H05347 | FIELD BOOK REF.
SUBMITTED BY | RECOMMENDED/APPROVED BY
PROJECT ENGINEER DATE | ADMINISTRATOR DATE
DESIGN ENGINEER DATE | COUNTY ENGINEER DATE

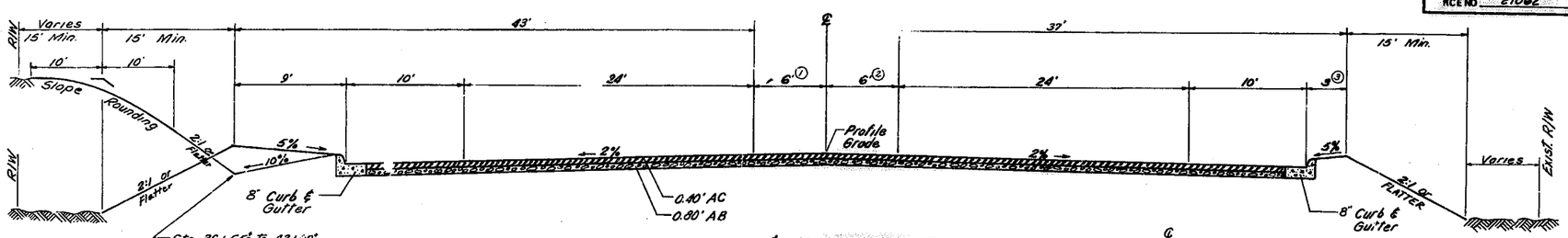

¢ IMPROVEMENT
BEAR VALLEY CUTOFF
Sta. 11+25 to 48+75

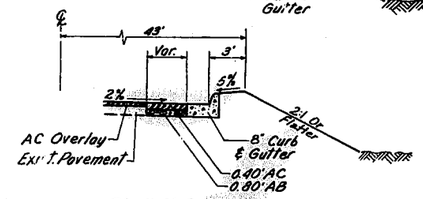

Sta. 11+00 to 15+50± Rt.
Sta. 45+50± to 49+30 Rt.
(Pavement Widening)

LEGEND

- Asphalt Concrete (A.C.)
- Aggregate Base (A.B.)
- Concrete (P.C.C.)
- Original Ground

DESIGN DESIGNATION

A.D.T. (1975)	6100	D = 65 %
A.D.T. (1996)	14,500	T = 3 %
D.H.V.	1400	V = 65 MPH
		TI = 10

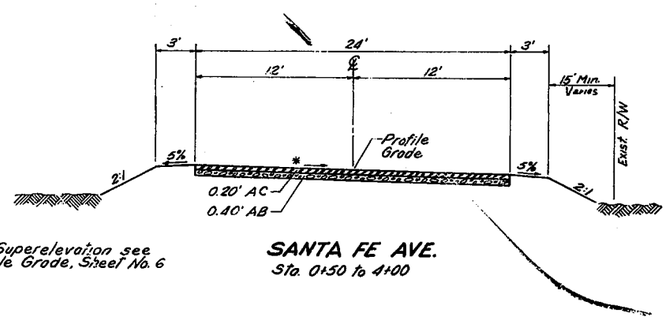

* For Superelevation see Profile Grade, Sheet No. 6

SANTA FE AVE.
Sta. 0+50 to 4+00

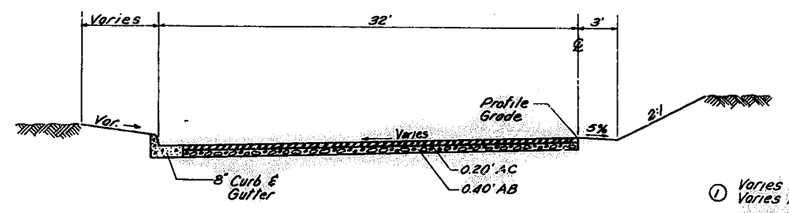

RIDGECREST RD.
Sta. 1+30± to 3+92.66

① Varies from 6' at Sta. 24+71.77 ℄ Imp. to 2' at Sta. 28+71.77 ℄ Imp.
Varies from 2' at Sta. 30+38.15 ℄ Imp. to 6' at Sta. 34+38.15 ℄ Imp.

② Varies from 6' at Sta. 24+79.11 ℄ Imp. to 2' at Sta. 28+79.11 ℄ Imp.
Varies from 2' at Sta. 30+45.49 ℄ Imp. to 6' at Sta. 34+45.49 ℄ Imp.

③ Varies from 3' at Sta. 24+79.11 ℄ Imp. to 7' at Sta. 28+79.11 ℄ Imp.

Note: All transitions; the rate of change is constant

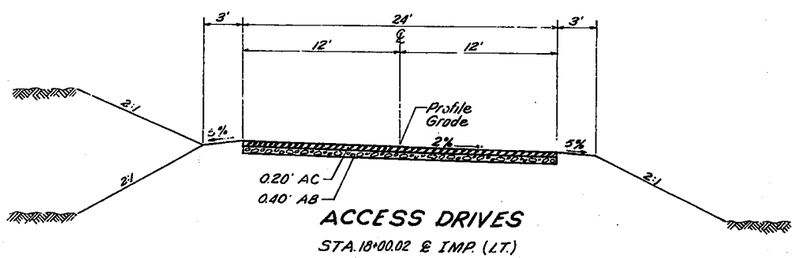

ACCESS DRIVES

STA. 18+00.02 ℄ IMP. (LT.)
(Sta. 10+40 to 25+80) *

STA 36+34.68 ℄ IMP. (RT.)
(Sta. 0+40± to 3+50)

* A.C. Paving to Sta. 11+02 Earth
Sta. 11+02 to 25+80

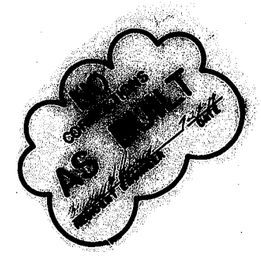

1. Dimensions shown are subject to tolerances specified in the Standard Specifications.
2. Warp A.C. at intersections, overlays and transitions as directed by the Engineer.
3. Super elevation as directed by the Engineer and rotates about the point; (Profile Grade).
4. The second paragraph of Section 19-5.03, "Relative Compaction (95 %) of the Standard Specifications will not apply to Santa Fe Ave., Ridgecrest Rd., and the Access Drives.
5. Relative Compaction of 90 % will be required on the unpaved portion of the Access Drive whether in excavation or embankment.

173-178
FILE NO. 158700 AB

DATE	APPR.	REVISIONS	MARK

DRAWN	CHECKED	
DESIGNED		

173-178
FILE NO. 158700 AB

REDUCED PLAN
0 1 2 3
3 INCHES ON ORIGINAL PLAN

1. Utilities are to be removed or relocated as necessary by others unless otherwise noted.
2. Existing utilities were plotted using available record information. The contractor shall notify the utility companies and verify the location of utilities prior to construction.
3. The contractor shall verify the exact location of removal items prior to construction.
4. The contractor shall maintain access to residences and businesses at all times during construction.

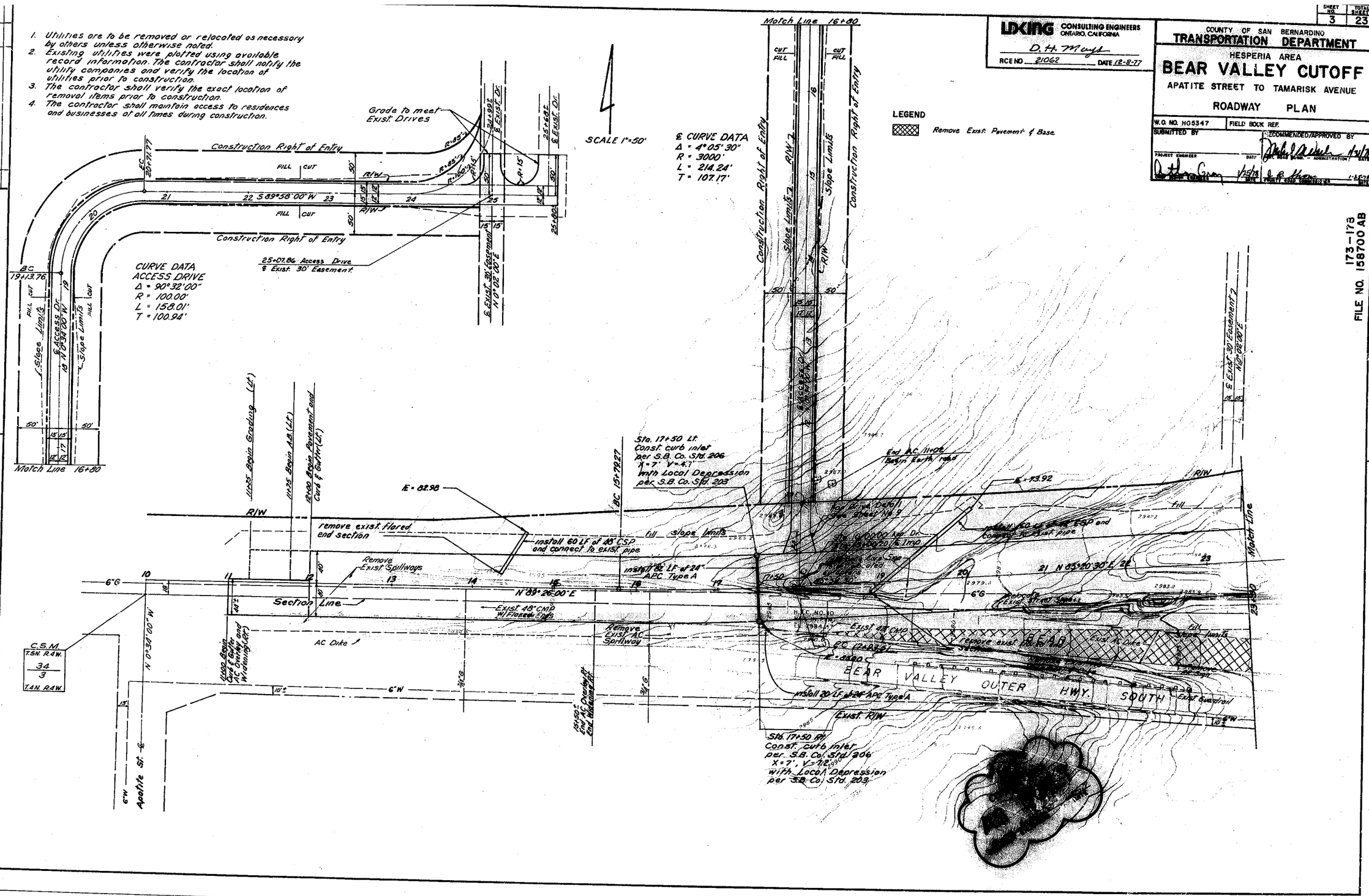

LDKING CONSULTING ENGINEERS
ONTARIO, CALIFORNIA
D. H. Murph
RCE NO. 21062 DATE 12-8-77

SHEET NO. 3 TOTAL SHEETS 23

COUNTY OF SAN BERNARDINO
TRANSPORTATION DEPARTMENT
HESPERIA AREA

BEAR VALLEY CUTOFF

APATITE STREET TO TAMARISK AVENUE

ROADWAY PLAN

W.O. NO. H05347 | FIELD BOOK REF.

SUBMITTED BY | RECOMMENDED/APPROVED BY

PROJECT ENGINEER | DATE | DEPT. HEAD DESIGN — ADMINISTRATION | DATE

1/25/78 | 1-26-78

FILE NO. 173-178 158700 AB

REDUCED PLAN
0 1 2 3
3 INCHES ON ORIGINAL PLAN

FILE NO. 173-178 158700 AB

LDKING CONSULTING ENGINEERS
ONTARIO, CALIFORNIA
D. H. Meyer
RCE NO. 21062 DATE 12-8-27

COUNTY OF SAN BERNARDINO
TRANSPORTATION DEPARTMENT
HESPERIA AREA

BEAR VALLEY CUTOFF

APATITE STREET TO TAMARISK AVENUE

ROADWAY PROFILES

W.O. NO. H05347 | FIELD BOOK REF
SUBMITTED BY | RECOMMENDED/APPROVED BY
PROJECT ENGINEER DATE | ADMINISTRATOR DATE
COUNTY TRANS. COMMISSIONER DATE

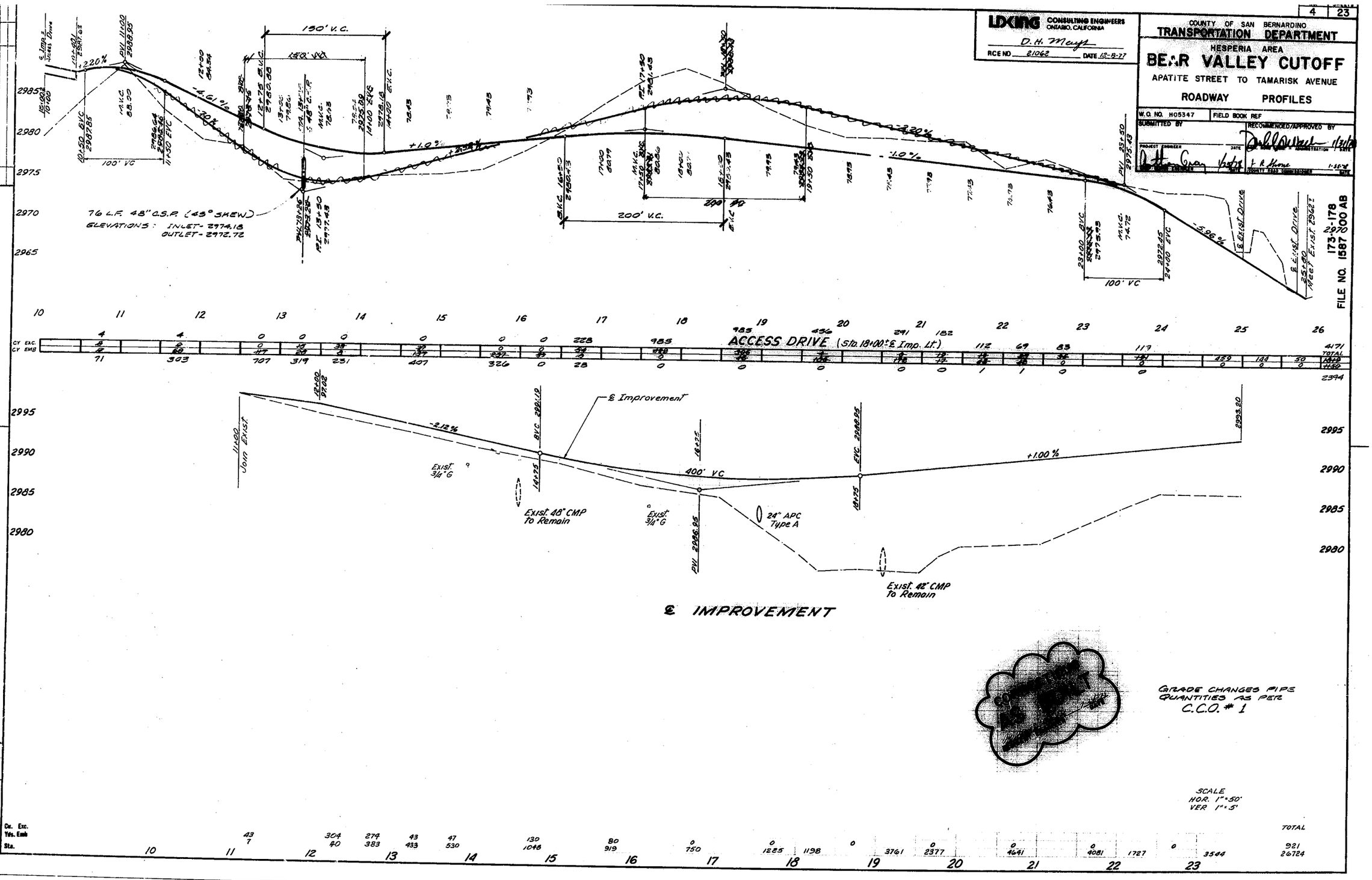

FILE NO. 1587 00 AB
173-178
297 00

REVISIONS | MARK | DATE | APPR.

LAB CHECKED | LAB NAMED | LAB CHECKED

FILE NO. 1587 00 AB
173-178

REDUCED PLAN
0 1 2 3
3 INCHES ON ORIGINAL PLAN

The basis of bearings is section line 34/3 from its point of intersection with the centerline of Apatite Street and section corner 34/35 3/2

The bearing of said section line being N89°26'00"E

The intersection of the centerlines of Bear Valley Cutoff and Apatite Street is Station 10+00.00, assumed.

The bearing of the Section Line being N89°26'00"E and is based on 1961 "as-built" plans. The Section Line distances are based on a 1975 County Survey

BENCH MARK
S.B.C.O. 703-40
Brass Disc in North East corner of concrete block signal base 10.5' East of Easterly R.R. rail and 0.2' North of Bear Valley Cutoff. (exist.)
Elev. = 2956.15

BENCH MARK
D-316 CSFB 4153/280
Chisel □ on North East corner of PCC Drainage Inlet, 170'± East and 30' South of the intersection of Bear Valley Cutoff and Jacaranda Elev. = 2885.26

LDKING CONSULTING ENGINEERS
ONTARIO, CALIFORNIA
D. H. Musgr
RCE NO. 21062 DATE 12-8-77

COUNTY OF SAN BERNARDINO
TRANSPORTATION DEPARTMENT
HESPERIA AREA
BEAR VALLEY CUTOFF
APATITE STREET TO TAMARISK AVENUE
ROADWAY PLAN

W.O. NO. H05347 | FIELD BOOK REF.
SUBMITTED BY | RECOMMENDED/APPROVED BY
PROJECT ENGINEER DATE | ASST. ROAD COMM. ADMINISTRATION DATE 1/3/78
DEPUTY ROAD COMMISSIONER DATE 1-13-78

CORRECTIONS AS BUILT
PROJECT ENGINEER DATE

SCALE 1"=50'

℄ CURVE DATA
Δ = 10°38'30"
R = 3000'
L = 557.20'
T = 279.40'

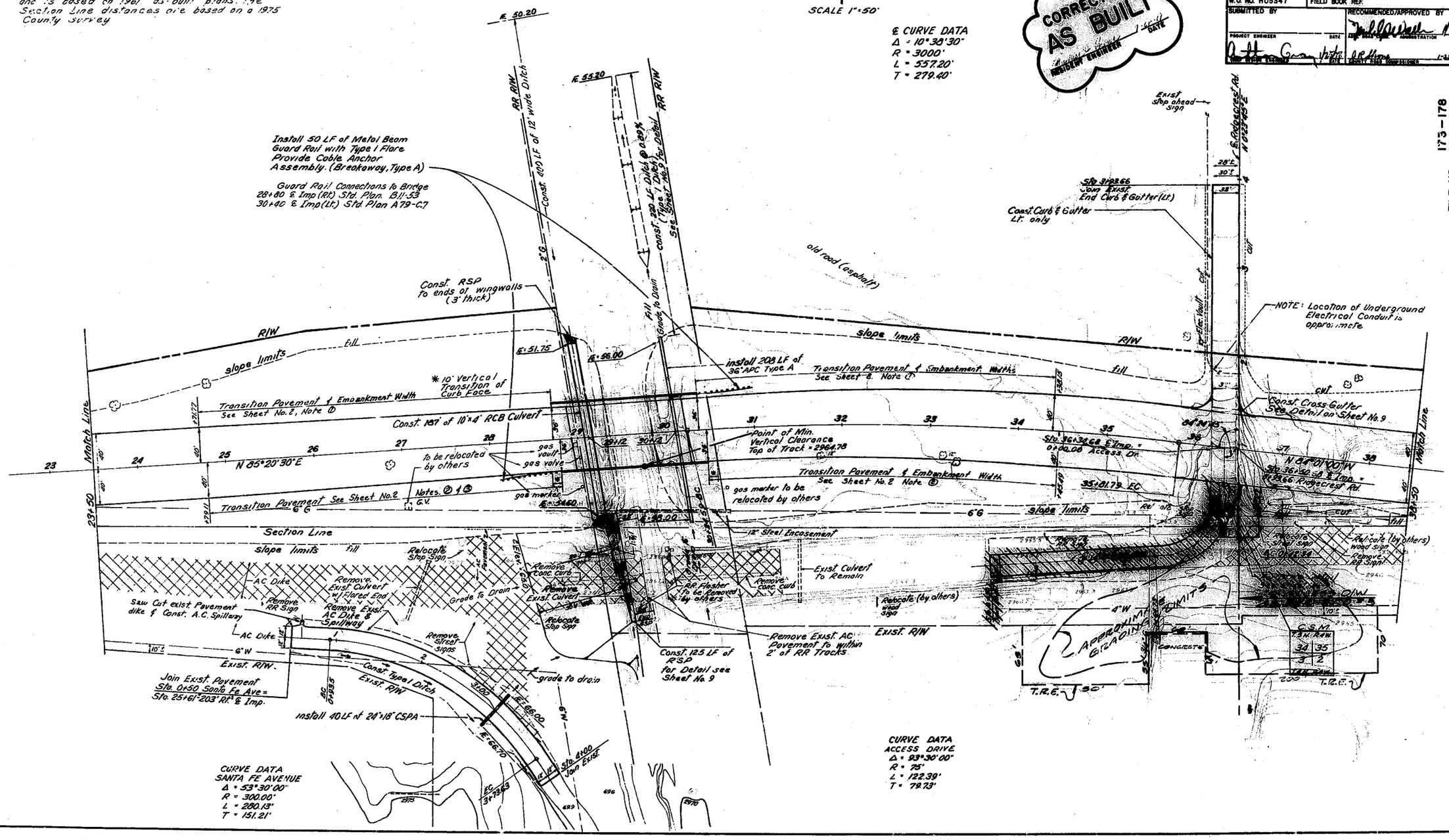

REDUCED PLAN
0 1 2 3
3 INCHES ON ORIGINAL PLAN

FILE NO. 173-178 158700 AB

MARK	REVISIONS	APPR	DATE

DESIGNED BY DRAWN CHECKED BY

FILE NO. 173-178 158700 AB

SHEET NO.	TOTAL SHEETS
6	23

LDKING CONSULTING ENGINEERS
ONTARIO, CALIFORNIA
D. H. Mayo
RCE NO. 21062 DATE 12-8-77

COUNTY OF SAN BERNARDINO
TRANSPORTATION DEPARTMENT
HESPERIA AREA

BEAR VALLEY CUTOFF

APATITE STREET TO TAMARISK AVENUE

ROADWAY — PROFILES

W.O. NO. H06347 | FIELD BOOK REF.

SUBMITTED BY — PROJECT ENGINEER — DATE

RECOMMENDED/APPROVED BY — DIV. ROAD YARD — ADMINISTRATION — DATE

COUNTY ROAD COMMISSIONER — DATE

FILE NO. 158700 AB 173-178

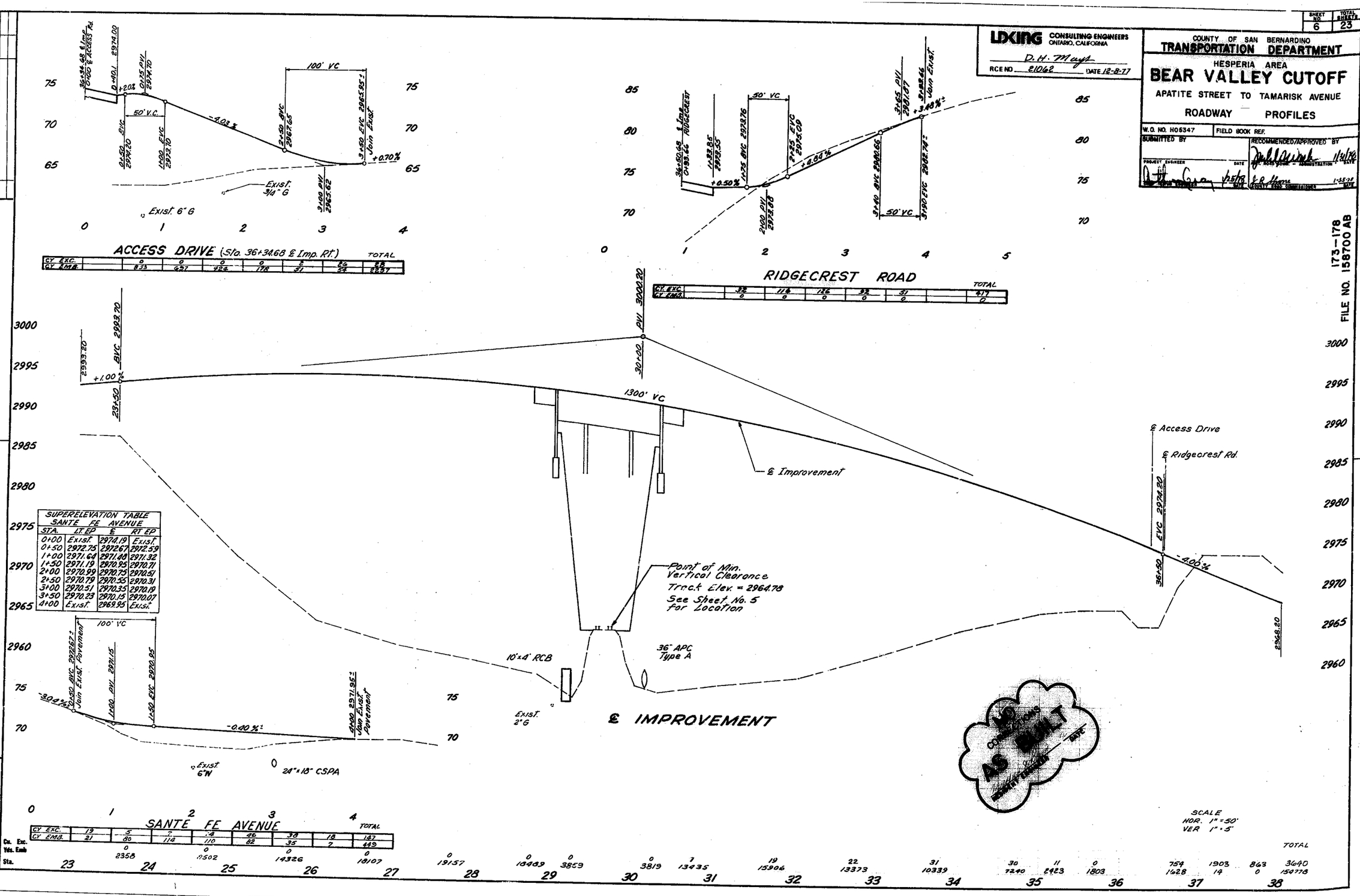

SUPERELEVATION TABLE
SANTE FE AVENUE

STA.	LT. EP	℄	RT. EP
0+00	Exist.	2974.19	Exist.
0+50	2972.75	2972.67	2972.59
1+00	2971.68	2971.60	2971.32
1+50	2971.19	2970.95	2970.71
2+00	2970.99	2970.75	2970.51
2+50	2970.79	2970.55	2970.31
3+00	2970.51	2970.35	2970.19
3+50	2970.23	2970.15	2970.07
4+00	Exist.	2969.95	Exist.

ACCESS DRIVE (S/O. 36+34.68 ℄ Imp. Rt.)

							TOTAL
CY EXC.	0	0	0	0	2	26	28
CY EMB.	835	427	424	178	51	54	2237

RIDGECREST ROAD

							TOTAL
CY EXC.	32	116	126	93	51		417
CY EMB.	0	0	0	0	0		0

SANTE FE AVENUE

								TOTAL
CY EXC.	19	5	7	4	46	38	18	147
CY EMB.	21	80	114	110	82	35	7	449

Sta.	23	24	25	26	27	28	29	30	31	32	33	34	35	36	37	38
Cu. Yds. Exc.	0	0	0	0	0	0	0	0	7	19	22	31	30	0	754	1903	843	3640
Yds. Emb.	2358	10502	14326	18107	19157	16483	3859	3819	13435	15906	13373	10339	7240	2423	1803	1628	14	0	154778

REDUCED PLAN
0 1 2 3

MARK	REVISIONS	APPR.	DATE

DESIGNED BY — DRAWN BY — CHECKED BY

FILE NO. 158700 AB 173-178

MARK	REVISIONS	APPR	DATE

LDKING CONSULTING ENGINEERS
ONTARIO, CALIFORNIA

D. H. May
RCE NO 21062 DATE 12-8-77

COUNTY OF SAN BERNARDINO
TRANSPORTATION DEPARTMENT

HESPERIA AREA

BEAR VALLEY CUTOFF

APATITE STREET TO TAMARISK AVENUE

ROADWAY PLAN

W.O. NO. H05347 | FIELD BOOK REF.

SUBMITTED BY — PROJECT ENGINEER — DATE

RECOMMENDED/APPROVED BY — ASST. DIR. OF TRANSPORTATION — DATE

1/5/78 — DIR. OF TRANSPORTATION — DATE

1-16-78 — COUNTY BOARD OF SUPERVISORS — DATE

FILE NO. 173-178 158700 AB

SCALE 1"=50'

℄ CURVE DATA
Δ = 6°18'45"
R = 3000'
L = 330.52'
T = 165.43'

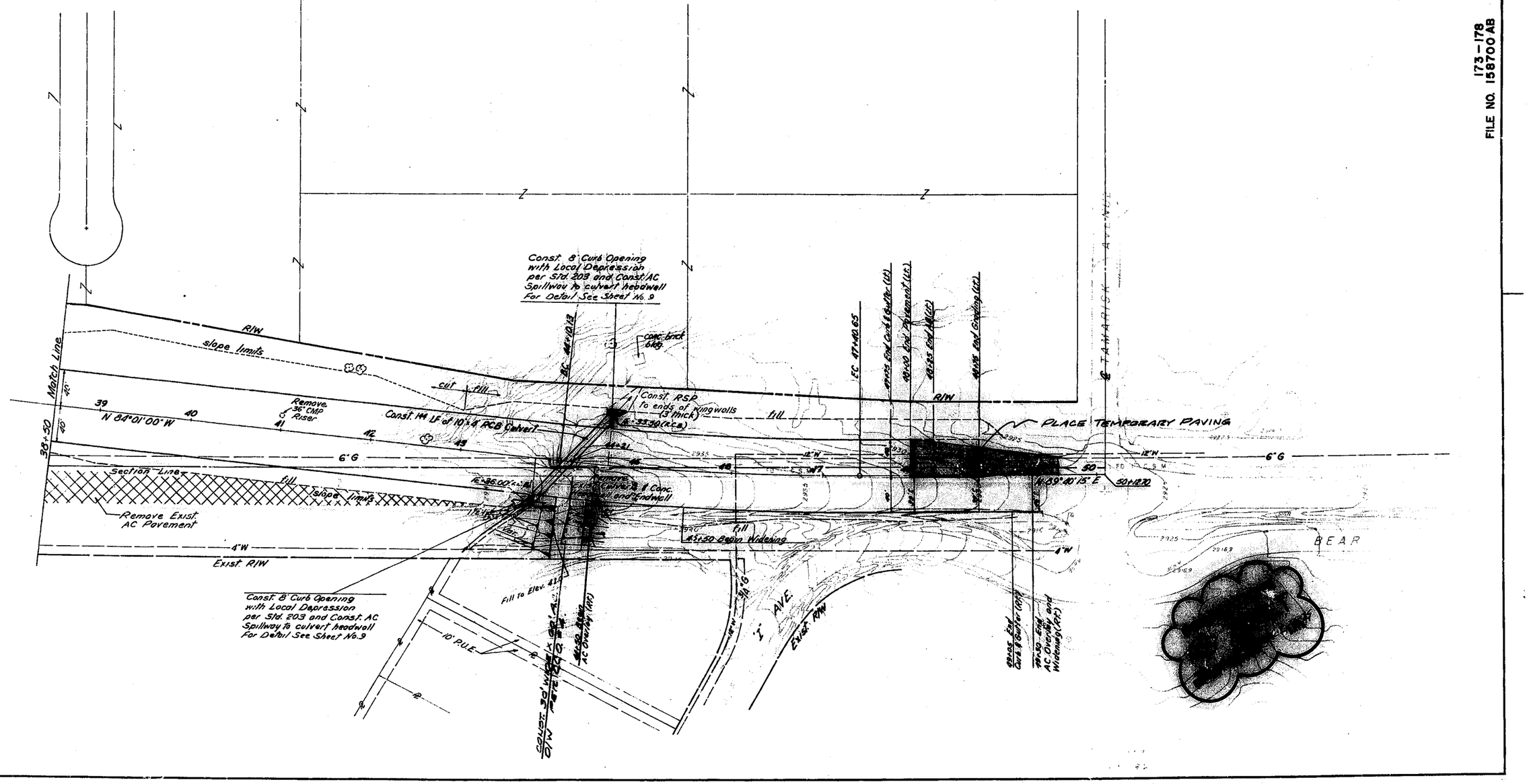

REDUCED PLAN
0 1 2 3
3 INCHES ON ORIGINAL PLAN

FILE NO. 173-178 158700 AB

MARK	REVISIONS	APPR	DATE

LOKING CONSULTING ENGINEERS
ONTARIO, CALIFORNIA
D.H. May
RCE NO. 21062 DATE 12-8-77

8 | 23

COUNTY OF SAN BERNARDINO
TRANSPORTATION DEPARTMENT
HESPERIA AREA

BEAR VALLEY CUTOFF

APATITE STREET TO TAMARISK AVENUE

ROADWAY PROFILES

W.O. NO. H05347 | FIELD BOOK REF.

SUBMITTED BY — PROJECT ENGINEER — DATE 1/25/80

RECOMMENDED/APPROVED BY — ADMINISTRATION — DATE 1/25/80 — FILE OF RIGHTS AND WAY ENGINEER — DATE 1-25-80

FILE NO. 173-178 158700 AB

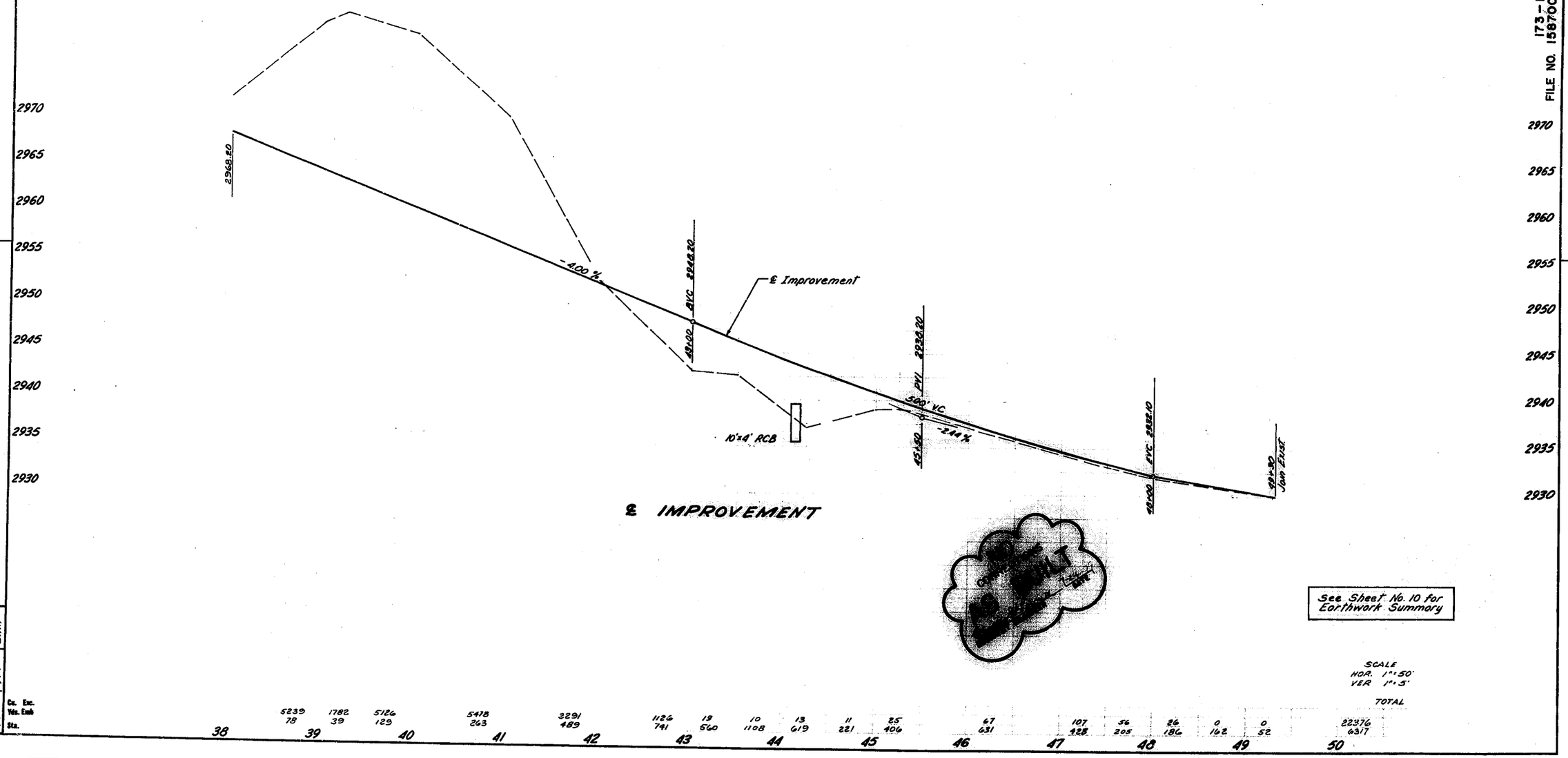

See Sheet No. 10 for Earthwork Summary

SCALE
HOR. 1" = 50'
VER 1" = 5'

LB CHICAGO | LB NAVAR | LB CHICAGO
173-178
FILE NO. 158700 AB

REDUCED PLAN
0 1 2 3
3 INCHES ON ORIGINAL PLAN

COUNTY OF SAN BERNARDINO
TRANSPORTATION DEPARTMENT
HESPERIA AREA
BEAR VALLEY CUTOFF
APATITE STREET TO TAMARISK AVENUE
CONSTRUCTION DETAILS

W.O. NO. H05347 | FIELD BOOK REF.
SUBMITTED BY | RECOMMENDED/APPROVED BY
PROJECT ENGINEER | DATE | ADMINISTRATION | DATE
DIVISION ENGINEER | DATE | DEPUTY DIRECTOR | DATE

FILE NO. 173-178 158700 AB

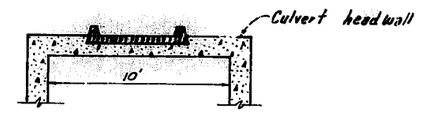

SECTION BB

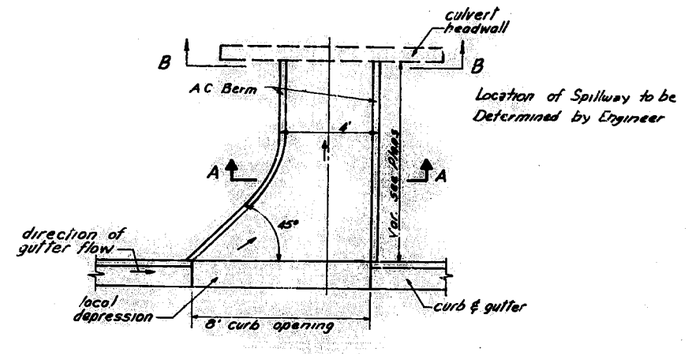

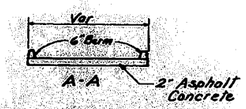

A.C. SPILLWAY DETAIL
Sta. 43+32 Rt. ℄ Imp.
Sta. 44+64 Lt. ℄ Imp.
SCALE: 1"=5'

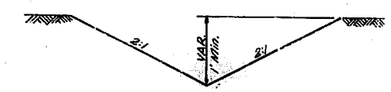

TYPE I

DITCH DETAILS
NO SCALE

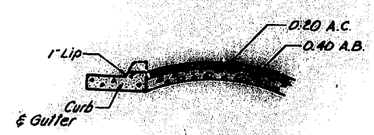

SECTION

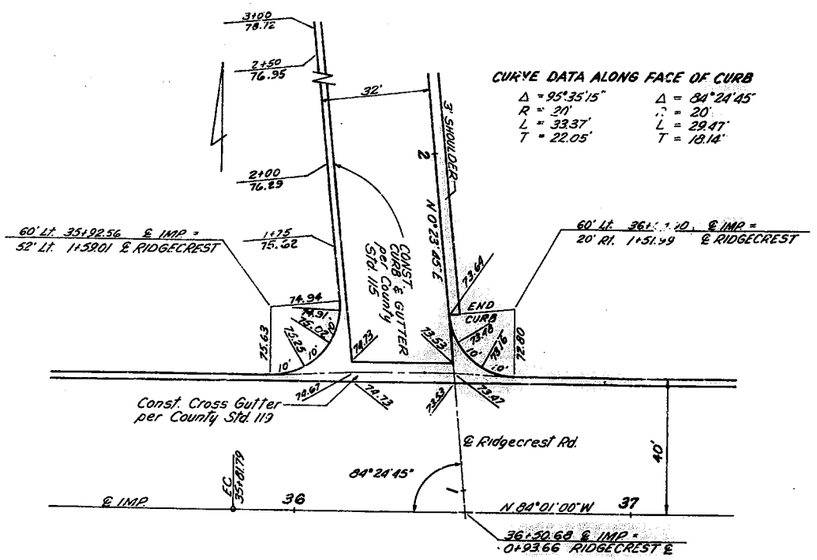

RIDGECREST ROAD INTERSECTION DETAIL
SCALE 1" = 20'

	ACCESS DR. 18+00.20 ℄ IMP.	ACCESS DR. 36+34.68 ℄ IMP.
(A)	2987.74	2974.64
(B)	2987.69	2974.33
(C)	2987.63	2974.00
(D)	2987.59	2973.38
(E)	2987.56	2973.08
(F)	2987.84	2974.38
(G)	2987.87	2973.90

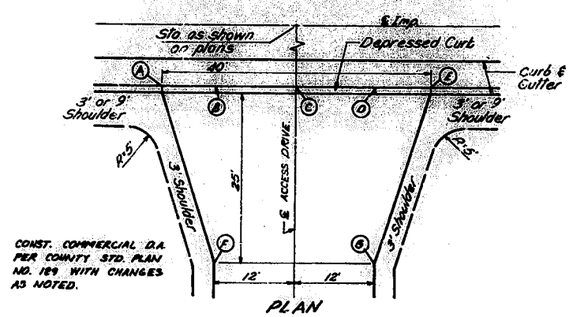

CONST. COMMERCIAL D.A. PER COUNTY STD. PLAN NO. 189 WITH CHANGES AS NOTED.

PLAN

DRIVEWAY APPROACH DETAIL
SCALE: 1" = 10'

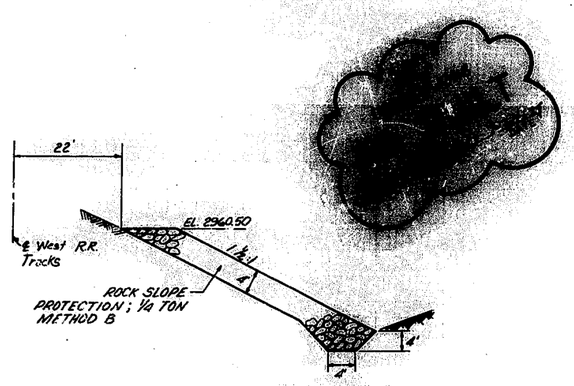

ROCK SLOPE PROTECTION DETAIL
SCALE: 1" = 10'

FILE NO. 173-178 158700 AB

REDUCED PLAN
0 1 2 3
3 INCHES ON ORIGINAL PLAN

LDKING CONSULTING ENGINEERS ONTARIO, CALIFORNIA
RCE NO. 21062 DATE 12-8-77

COUNTY OF SAN BERNARDINO
TRANSPORTATION DEPARTMENT
HESPERIA AREA
BEAR VALLEY CUTOFF
APATITE STREET TO TAMARISK AVENUE
SUMMARY OF DRAINAGE STRUCTURES AND SUMMARY OF QUANTITIES

W.O. NO. H05347 FIELD BOOK REF.
SUBMITTED BY
PROJECT ENGINEER DATE
RECOMMENDED/APPROVED BY
DIRECTOR OF ADMINISTRATION / DATE
COUNTY ROAD COMMISSIONER DATE

173-178
FILE NO. 158700 AB

(F) The Quantity shown in the columns for each individual portion of the work is a Final Pay Quantity

SUMMARY OF DRAINAGE STRUCTURES

STRUCTURE DATA

LOCATION AND DESCRIPTION		INVERT DATA INLET STATION	INLET OFFSET	INLET ELEV.	INVERT DATA OUTLET STATION	OUTLET OFFSET	OUTLET ELEV.	CULVERT LENGTH 24" APC TYPE A LF	36" APC TYPE A LF	42" CSP LF	48" CSP LF	28"x18" CSPA LF	10'x4' RCB LF	PIPE REMOVAL 48"x23"	WINGWALLS TYPE A CONCRETE CY	TYPE A STEEL LB	TYPE B CONCRETE CY	TYPE B STEEL LB	(F) CONCRETE CLASS A CY	(F) REINFORCING STEEL LB	(F) STRUCTURE EXCAVATION CY	(F) STRUCTURE BACKFILL CY	(F) STRUCTURE EXCAVATION	STRUCTURE BACKFILL	(F) MINOR CONCRETE (Minor Structure) CY	(F) MISC. IRON & STEEL LB	MINOR CONCRETE (Misc. Construction) CY	DITCH EXCAVATION CY
14+24 ℄ IMP.	PIPE CULVERT LT.	14+32±	14' LT.±	2984.36	14+65±	67' LT.±	2982.98																					
13+25 ℄ IMP.	INTERMACE ACCESS	13+05±	20' LT.±	2974.18	13+29±	35' RT.±	2972.72				60																	
17+50 ℄ IMP.	TYPE A CATCH BASIN (Sag)	17+50	40' LT.	2987.18							76												44	44				
17+50 ℄ IMP.	PIPE CULVERT LT. & RT.	17+50	40' LT.	2983.18	17+50	40' RT.	2980.98																					
17+50 ℄ IMP.	TYPE A CATCH BASIN (Sag)	17+50	40' RT.	2987.18				82																	3.7	130	.32	
17+50 ℄ IMP.	PIPE CULVERT RT.	17+50	40' RT.	2980.98	17+61±	84' RT.	2980.00	20															51	71				
																									5.5	130	.32	
19+05.5 ℄ IMP.	PIPE CULVERT LT	18+88±	135' RT.±	2976.50±	20+15±	84' LT.±	2973.92			160													9	19				
29+12 ℄ IMP.	BOX CULVERT LT. & RT.	29+20.66	84.56 RT.	2954.50	29+01.00	101.42'	2951.75																104	205				
(V invert)	WINGWALL LT. BK. L=11												187						17.4	49325	103	285						
Max. Earth	WINGWALL LT. AH. L=15														8.0	682			8.0	682	3	5						
Cover = 27'	WINGWALL RT. BK. L=15														11.0	930			11.0	930	2	3						
	WINGWALL RT. AH. L=11																10.0	675	10.0	675	2	3						
																	7.4	539	7.4	539	2	5						
30+12 ℄ IMP.	PIPE CULVERT LT. & RT.	30+24	102 RT.	2952.00	30+00	104' LT.	2956.00																					
						208																						
44+20.5 ℄ IMP.	BOX CULVERT LT. & RT.	43+78.36	52.07 RT.	2936.10	44+68.96	59.84 LT.	2933.50																133	238				293
(V invert)	WINGWALL LT. BK. L=11'												144															
Max. Earth	WINGWALL LT. AH. L=11'																		10.8	27300	4.78	209						
Cover = 10'	WINGWALL RT. BK. L=12'														5.5	275			5.5	275	3	3						
	WINGWALL RT. AH. L=12'														5.5	275			5.5	275	6	4						
																	5.3	266	5.3	266	21	7						
3+00 ℄ W. SANTA FE AVE	PIPE CULVERT LT-RT	3+00	19' RT.	2966.70	3+00	21' LT.	2966.00												5.3	266	21	7						
												40											23	39				
43+82 ℄ IMP.	CURB OPENING LT.																											
44+64 ℄ IMP.	CURB OPENING RT.																											
27+00±	RT.																									.37		
29+30±	RT.																									.37		
44+20±	RT.													70														
														70														
														235														
								102	208	160	60	40	331	410					340	81337	643	536	364	656	32	260	1.38	293

LEGEND

APC	ALTERNATE PIPE CULVERT
ACP	ASBESTOS CEMENT PIPE
CSP	CORRUGATED STEEL PIPE
CSPA	CORRUGATED STEEL PIPE ARCH
RCP	REINFORCED CONCRETE PIPE
RCB	REINFORCED CONCRETE BOX

ALLOWABLE ALTERNATES

TYPE A	ACP, CL. III; CSP, .079; RCP, CL. III

MINOR CONCRETE Misc. Construction

Curb and Gutter	403.00
Gutter Depressions	1.38
Cross Gutter	13.38
Total	417.76 CY

BRIDGE APPROACH GUARDRAIL

	GUARDRAIL	ANCHOR ASSEM.
28+29.11 to 28+79.11 Rt.	50	1
30+38.15 to 30+88.15 Lt.	50	1
Total	100 LF	2 EA.

PLACING ASPHALT CONC. Misc. Areas

0+65 W. Santa Fe	5
43+78 ℄ Imp. Lt.	10
44+69 ℄ Imp. Rt.	10
Total	25 SY

ROCK SLOPE PROTECTION

1/4 Ton Method B (F)

	ROCK		STRUCT. EXCAV.
29+12 Rt. inlet of 10'x4' RCB	219		154
29+12 Lt. outlet of 10'x4' RCB	40		40
44+69 Lt. outlet of 10'x4' RCB	35		35
Total	294 CY		229 CY

EARTHWORK SUMMARY

		EXCAV.	EMB.
℄ Imp.		26937	187819
Santa Fe Ave		147	449
Ridgecrest Rd.		417	0
18+00.2 Access Dr.		1819	1150
36+34.68 Access Dr.		28	2257
Pavement Removal		2761	
Ditch Excav.	293		
Total CY	293	32109	191657

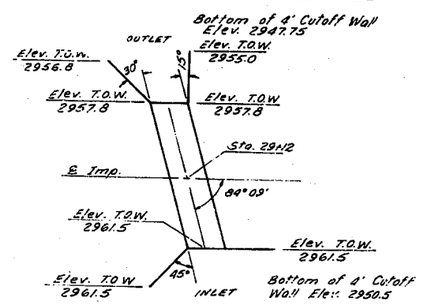

RCB STA. 29+12 ℄ IMP.

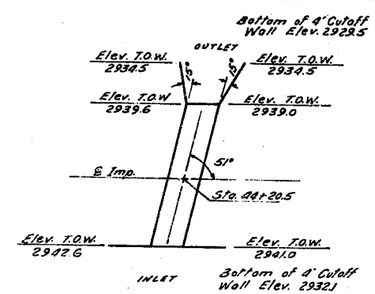

RCB STA. 44+20.5 ℄ IMP.

NOTES

1. ALL CSP AND CSPA SHALL BE BITUMINOUS COATED.
2. CONTRACTOR TO VERIFY LOCATION AND PIPE LENGTHS WITH ENGINEER BEFORE ORDERING PIPE.
3. CONTRACTOR TO VERIFY CULVERT AND WINGWALL ELEVATIONS WITH ENGINEER BEFORE CONSTRUCTION.

CORRECTIONS AS BUILT

REDUCED PLAN
0 1 2 3
3 INCHES ON ORIGINAL PLAN

173-178
FILE NO. 158700 AB

DATE	
APPR.	
REVISIONS	
MARK	

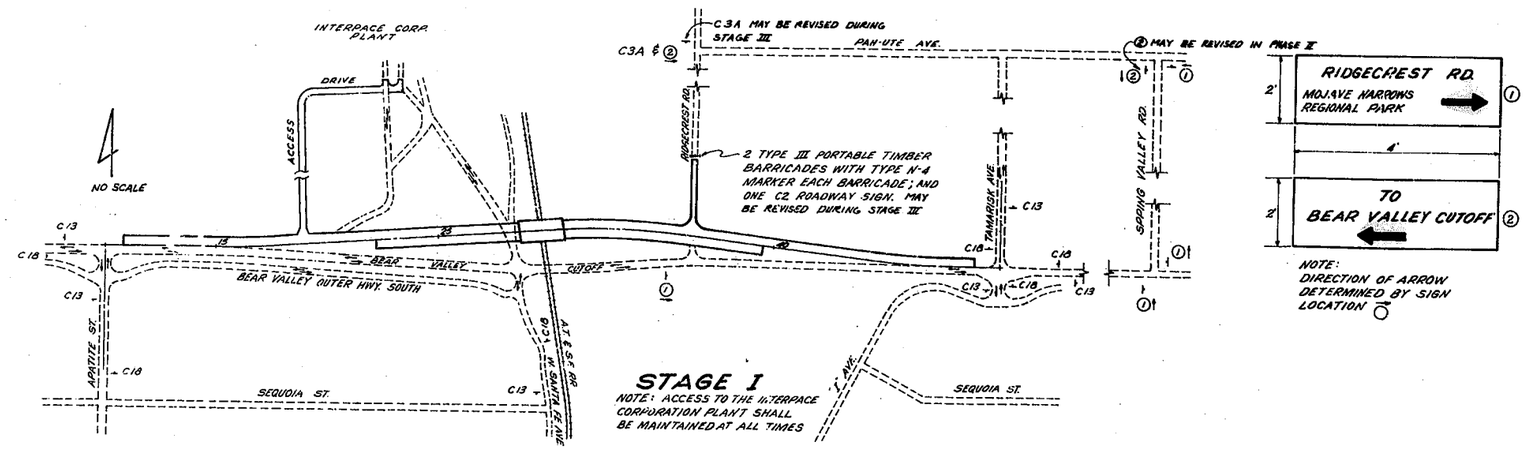

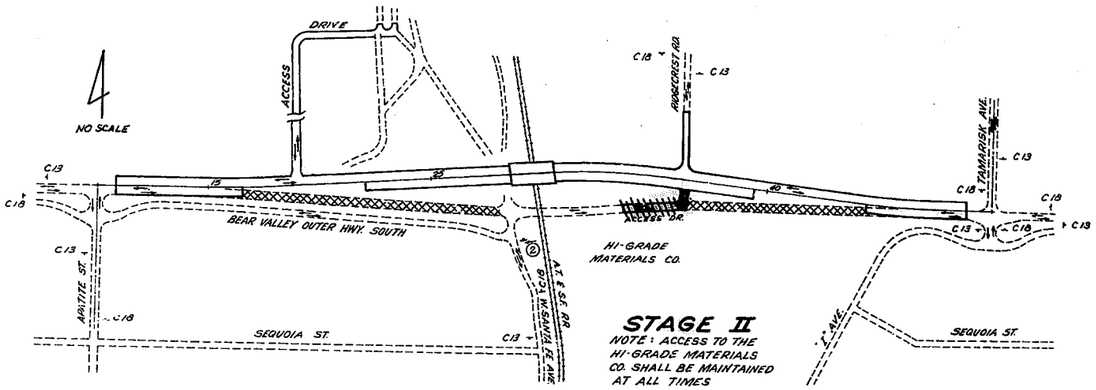

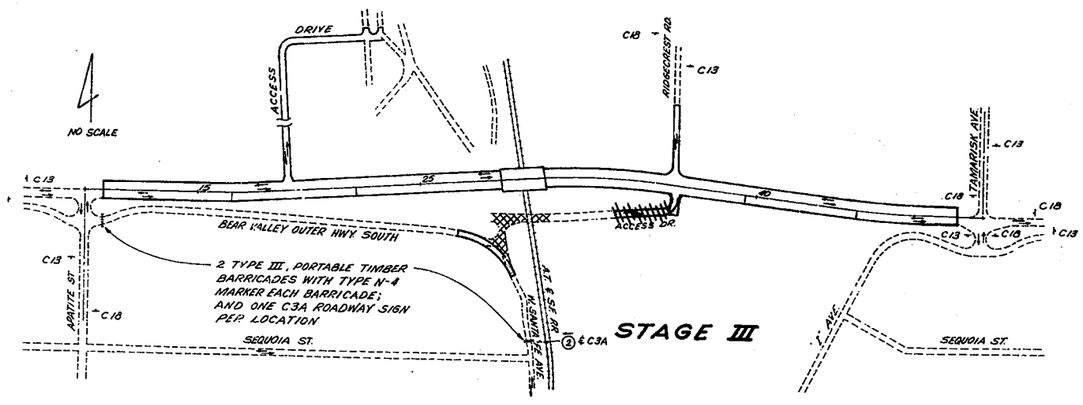

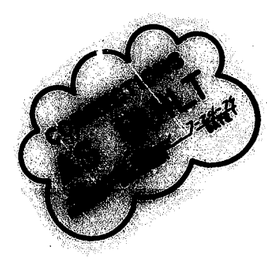

BARRICADE SIGNING	
TYPE	EA.
Type III Portable Timber Barricade	6
N-4 Marker	6
C-2 Sign	1
C-3A Sign	2

GUIDE MARKERS CLASS 2	
TYPE	EA
F	16
K	1

CONSTRUCTION SIGNS	
TYPE	EA
C-3A	1
C-13	7
C-18	7
①	4
②	3

- Construction This Stage
- Traffic Thru Construction
- Remove exist. Pavement & Base
- Prefabricated Sign and Directional Arrow
- Barricade
- Sign
- Traffic Flow Arrow & No. of Lanes

1. Temporary Sign panels, 4'x2', shall be construction grade plywood suitable for the purpose intended. Colors shall be white on green. The direction arrow will vary per sign location.
2. All C-18 signs shall be 48" x 48"
3. Existing signs shall be removed when no longer required for traffic control as determined by the engineer.
4. Undamaged existing signs shall be used for temporary traffic control as determined by the engineer.
5. All signs shall be reflectorized.
6. Sign, Guide Marker, and Barricade locations shall be determined by the engineer.
7. The top course of asphalt concrete on the ℄ of improvement shall not be placed before completion of stage III.

LDKING CONSULTING ENGINEERS ONTARIO, CALIFORNIA
D. H. Mayk
RCE NO. 21062 DATE 12-8-77

COUNTY OF SAN BERNARDINO
TRANSPORTATION DEPARTMENT
HESPERIA AREA
BEAR VALLEY CUTOFF
APATITE STREET TO TAMARISK AVENUE
CONSTRUCTION STAGING DIAGRAM

W.O. NO. HO 5347 | FIELD BOOK REF.
SUBMITTED BY | RECOMMENDED/APPROVED BY
PROJECT ENGINEER DATE | DEPUTY DIRECTOR, ADMINISTRATION DATE
1-25-78
DATE | COUNTY ROAD COMMISSIONER DATE

173-178
FILE NO. 158700 AB

U.S. GEOD. & SURV. APPR. 1967
LA MAYOR APPR. 1967

173-178
FILE NO. 158700 AB

REDUCED PLAN
0 1 2 3
3 INCHES ON ORIGINAL PLAN

To accompany plans dated

DISTRICT	COUNTY	ROUTE	Post Miles - Total Project	SHEET NO.	TOTAL SHEETS
				12	23

CHIEF ENGINEER - PLANNING BRANCH
REGISTERED CIVIL ENGINEER NO. 2013

DATE October 14, 1977

SPAN		4						5							
HEIGHT	'	2		3		4		2		3		4		5	
Maximum Earth Cover	'	10	20	10	20	10	20	10	20	10	20	10	20	10	20
Conc. Roof T1	"	7	7	7	7	7	7	7½	7½	7½	7½	7½	7½	7½	7½
Conc. Walls T2	"	6	6	6	6	6	6½	6	6	6	6	6	7	6½	7½
Conc. Invert T3	"	6	6	6	6	6	6½	6½	7	6½	7	6½	7	6½	7
Reinf. Spacing	"	7	7	7	7	7	7	8½	6	8½	5½	8½	5½	8½	5½
Reinf. "a" Size	Bar #	6	6	6	6	6	6	7	6	7	6	7	6	7	6
Reinf. "e" Size	Bar #	4	4	4	5	5	6	4	4	4	4	5	5	6	6
Quan. Concrete	CF/LF	7.4	7.4	8.4	8.4	9.4	10.1	8.9	9.2	10.0	10.2	11.0	12.0	12.5	13.7
Quan. Reinforcement	lbs/LF	48	48	50	55	58	67	58	60	58	68	67	81	82	105

SPAN		6								7									
HEIGHT	'	3		4		5		6		3		4		5		6		7	
Maximum Earth Cover	'	10	20	10	20	10	20	10	20	10	20	10	20	10	20	10	20	10	20
Conc. Roof T1	"	8	8	8	8	8	8	8	8	8	9	8	9	8	9	8½	9	8½	9
Conc. Walls T2	"	6	6	6	7	6½	7½	7	8½	6	6	6	7	6½	7½	7	8½	8	9½
Conc. Invert T3	"	7	8	7	8	7	8	7	8	8	9	8	9	8	9	8	9	9	9
Reinf. Spacing	"	7½	5	7½	5	7½	5	7½	4½	6½	5	6½	4½	6½	5½	6½	5½	6½	5½
Reinf. "a" Size	Bar #	7	6	7	6	7	6	7	6	7	6	7	6	7	7	7	7	7	7
Reinf. "e" Size	Bar #	4	4	5	5	6	6	7	8	4	4	5	5	6	6	6	7	7	7
Quan. Concrete	CF/LF	11.7	12.3	12.7	14.2	14.2	15.9	15.9	16.3	13.7	14.9	14.6	16.8	16.1	16.5	18.1	21.0	20.7	23.[illegible]
Quan. Reinforcement	lbs/LF	70	81	82	96	97	120	124	148	94	94	105	118	121	147	130	177	160	192

SPAN		8									
HEIGHT	'	4		5		6		7		8	
Maximum Earth Cover	'	10	20	10	20	10	20	10	20	10	20
Conc. Roof T1	"	[illegible]	[illegible]	[illegible]	[illegible]	[illegible]	[illegible]	[illegible]	[illegible]	[illegible]	10
Conc. Walls T2	"	6	7	6½	7½	7	8½	8	9½	[illegible]	10½
Conc. Invert T3	"	8	9½	8	10	8	10	8	10	8	10
Reinf. Spacing	"	6	6	6	5	6	4½	6	5	6	4½
Reinf. "a" Size	Bar #	7	7	7	7	7	7	7	7	7	7
Reinf. "e" Size	Bar #	[illegible]	[illegible]	[illegible]	[illegible]	6	6	6	7	7	7
Quan. Concrete	CF/LF	16.4	19.6	17.9	21.1	19.5	24.1	22.1	26.[illegible]	24.1	30.1
Quan. Reinforcement	lbs/LF	123	151	131	171	137	198	160	215	192	252

"d" bars for earth covers of 2' and less								
Span	4'	5'	6'	7'	8'	10'	12'	14'
Number	5	6	7	8	9	10	12	16

SPAN		10											
HEIGHT	'	5		6		7		8		9		10	
Maximum Earth Cover	'	10	20	10	20	10	20	10	20	10	20	10	20
Conc. Roof T1	"	8	10½	8	10½	8	10½	8	10½	8	10½	8½	11
Conc. Walls T2	"	8	8	8	9	8	9	8	10	8½	11½	9½	12½
Conc. Invert T3	"	8	11	8	11	8	11	8	11	8	11	8½	11
Reinforcement Spacing	"	13	12	12	12	11	11	10	11	11	10	11	10
Reinforcement "a" Size	Bar #	6	7	6	7	6	7	6	7	6	6	6	6
Reinforcement "b" Size	Bar #	6	7	6	7	6	7	6	7	6	6	7	7
Reinforcement "b" Dimension "B"	' "	2-11	2-11	2-11	3-0	2-11	3-9	2-11	3-9	2-11	3-9	2-11	3-9
Reinforcement "b" Dimension "Bw"	' "	4-10	5-0	4-10	5-0	4-10	5-0	4-10	5-0	4-10	6-0	4-7	4-7
Reinforcement "c" Size	Bar #	6	7	6	7	6	7	6	7	7	7	7	7
Reinforcement "c" Dimension "C"	' "	3-4	3-4	7-4	4-8	7-7	4-9	8-2	4-8	7-7	4-8	7-7	4-8
Reinforcement "e" Size	Bar #	4	4	4	4	4	4	4	4	4	4	5	5
Quan. Concrete	CF/LF	21.6	26.8	23.0	29.5	24.3	31.0	25.6	34.1	27.8	37.7	32.1	42.3
Quan. Reinforcement	lbs/LF	191	267	233	285	260	325	300	339	314	327	360	373

SPAN		12													
HEIGHT	'	6		7		8		9		10		11		12	
Maximum Earth Cover	'	10	20	10	20	10	20	10	20	10	20	10	20	10	20
Conc. Roof T1	"	8½	12	8½	12	8½	12	8½	12	8½	12	8½	12	8½	12
Conc. Walls T2	"	8	10	8½	10½	8½	10½	8½	11½	9	12½	[illegible]	[illegible]	[illegible]	15
Conc. Invert T3	"	8½	12½	9	12½	9	12½	9	12½	9	12½	9½	13	10	[illegible]
Reinforcement Spacing	"	9	10	9	10	9	10	8	10	8	10	10	9	9	8
Reinforcement "a" Size	Bar #	6	7	6	7	6	7	6	7	6	7	6	6	6	6
Reinforcement "b" Size	Bar #	6	7	6	7	6	7	6	7	6	7	7	7	6	7
Reinforcement "b" Dimension "B"	' "	3-1	3-2	3-9	3-9	3-9	3-9	3-7	3-9	3-7	4-4	3-7	4-4	4-4	4-4
Reinforcement "b" Dimension "Bw"	' "	6-0	5-10	6-2	6-7	6-2	6-7	4-11	4-11	4-11	4-11	4-11	4-11	4-4	4-4
Reinforcement "c" Size	Bar #	6	7	6	7	6	7	6	7	6	7	7	7	7	7
Reinforcement "c" Dimension "C"	' "	4-4	3-7	8-1	5-7	8-1	5-7	8-1	5-7	8-1	5-7	8-1	5-7	8-1	5-7
Reinforcement "e" Size	Bar #	4	4	4	4	4	4	4	4	4	4	[illegible]	[illegible]	[illegible]	[illegible]
Quan. Concrete	CF/LF	26.8	37.7	29.3	40.1	30.3	41.9	[illegible]	[illegible]	[illegible]	[illegible]	[illegible]	[illegible]	[illegible]	[illegible]
Quan. Reinforcement	lbs/LF	295	362	353	409	365	420	402	413	416	424	440	471	[illegible]	[illegible]

SPAN		14															
HEIGHT	'	7		8		9		10		11		12		13		14	
Maximum Earth Cover	'	10	20	10	20	10	20	10	20	10	20	10	20	10	20	10	20
Conc. Roof T1	"	[illegible]	14	[illegible]	[illegible]	[illegible]	14	[illegible]	14	10	14	10	14	[illegible]	14	11	14
Conc. Walls T2	"	[illegible]	11	[illegible]	[illegible]	[illegible]	[illegible]	[illegible]	[illegible]	[illegible]	14	11½	16	[illegible]	[illegible]	13½	7½
Conc. Invert T3	"	10	[illegible]	10	[illegible]	10	[illegible]	10	[illegible]	[illegible]	14½	13½	15	11	15	11½	15
Reinforcement Spacing	"	10	9	10	[illegible]	10	[illegible]	10	[illegible]	[illegible]	8	[illegible]	10	10	10	10	9
Reinforcement "a" Size	Bar #	7	7	7	7	7	7	7	7	7	7	6	7	6	7	6	7
Reinforcement "b" Size	Bar #	6	7	7	7	7	7	7	7	7	7	[illegible]	[illegible]	7	8	7	8
Reinforcement "b" Dimension "B"	' "	3-9	4-2	3-4	4-4	3-4	4-6	[illegible]	[illegible]	[illegible]	4-6	[illegible]	4-6	3-6	4-6	4-9	6-0
Reinforcement "b" Dimension "Bw"	' "	[illegible]	7-0	7-0	8-4	7-0	8-4	[illegible]	[illegible]	[illegible]	6-0	6-0	6-0	5-0	6-0	4-6	6-0
Reinforcement "c" Size	Bar #	7	7	7	7	7	7	7	7	7	7	7	8	8	8	8	8
Reinforcement "c" Dimension "C"	' "	4-0	4-2	[illegible]	[illegible]	[illegible]	[illegible]	[illegible]	[illegible]	[illegible]	[illegible]	8-11	6-4	8-11	6-4	8-11	6-4
Reinforcement "e" Size	Bar #	4	4	4	4	[illegible]	[illegible]	[illegible]	[illegible]	[illegible]	[illegible]	[illegible]	[illegible]	[illegible]	[illegible]	6	6
Quan. Concrete	CF/LF	[illegible]	[illegible]	[illegible]	[illegible]	[illegible]	[illegible]	[illegible]	[illegible]	[illegible]	[illegible]	[illegible]	[illegible]	[illegible]	[illegible]	[illegible]	81.3
Quan. Reinforcement	lbs/LF	374	471	[illegible]	[illegible]	[illegible]	[illegible]	[illegible]	[illegible]	[illegible]	[illegible]	[illegible]	[illegible]	[illegible]	[illegible]	604	759

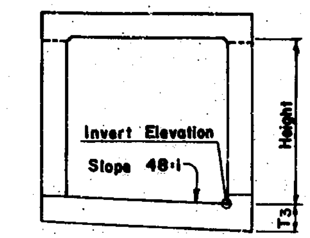

SLOPED INVERT

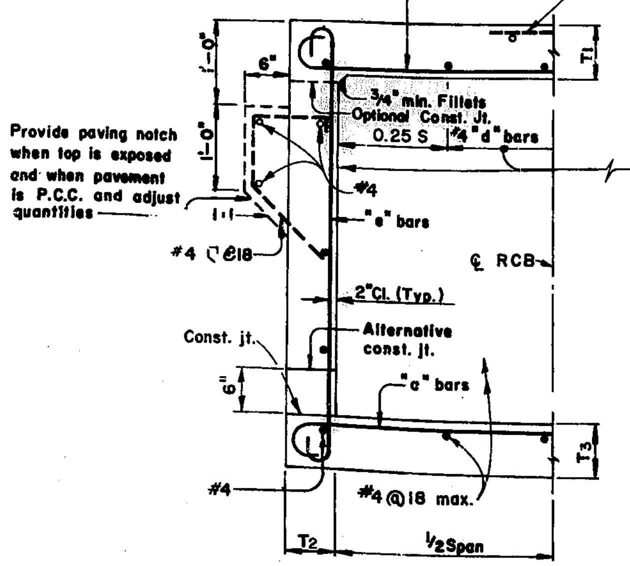

TYPICAL SECTION-SPANS 4' THRU 8'

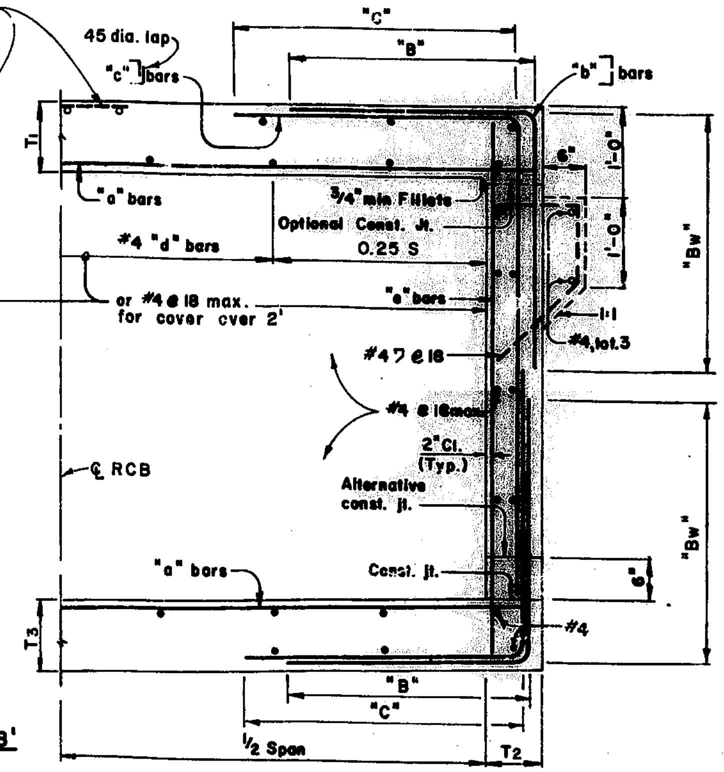

TYPICAL SECTION-SPANS 10' THRU 14'

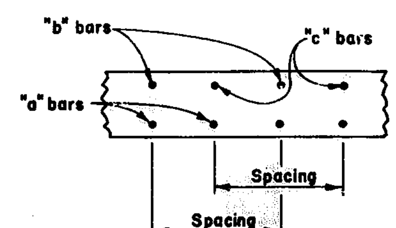

ROOF SECTION
SPANS 10' THRU 14'
Invert similar

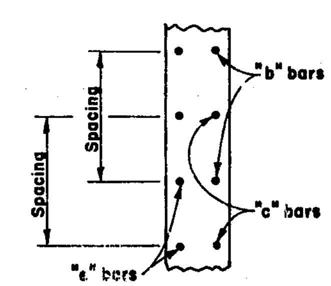

WALL SECTION
SPANS 10' THRU 14'

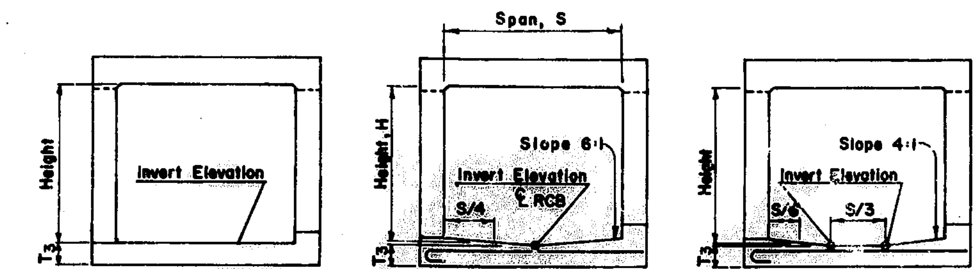

"FLAT INVERT" "V INVERT" "TRAPEZOIDAL INVERT"

ALTERNATIVE INVERTS

GENERAL NOTES

For boxes with Span or Height less than any of those shown in table, use next greater size box concrete dimensions and reinforcement. Make necessary changes in bar lengths and quantities.

Quantities are approximate and for design purposes only.

For boxes with Span or Height or cover greater than those shown in tables, a special design is required.

NO CORRECTIONS
AS BUILT
RESIDENT ENGINEER 7-24-79 DATE

173-178
FILE NO. 158700AB

SPECIAL DETAILS
SINGLE BOX CULVERT

ND80

173-178
FILE NO. 158700AB

REDUCED PLAN
0 1 2 3
3 INCHES ON ORIGINAL PLAN

DATE October 14, 1977

To accompany plans dated

DISTRICT	COUNTY	ROUTE	Post Miles-Total Project	SHEET NO.	TOTAL SHEETS
				13	23

CHIEF ENGINEER-PLANNING BRANCH
REGISTERED CIVIL ENGINEER NO. 9013

SPECIFICATIONS:
A.A.S.H.T.O. DATED 1973 WITH INTERIM REVISIONS AND AS SUPPLEMENTED BY BRIDGE PLANNING AND DESIGN MANUAL.

SECTIONS ARE DESIGNED FOR CULVERTS WHERE FOUNDATIONS WILL SUPPORT THE SOIL PRESSURES SHOWN FOR FILL HEIGHTS, TO 20' MAXIMUM.

EARTH COVER IS ASSUMED TO BE UNIFORM.
FOR VARIABLE TRANSVERSE COVER HEIGHTS, A SPECIAL DESIGN IS REQUIRED.

LOAD FACTORS: $1.5\,D + 1.5\,E + 2.5\,(L+I)$
WHERE D = DEAD LOAD
E = EARTH LOAD
L = LIVE LOAD
I = IMPACT
CAPACITY REDUCTION FACTOR = 1.0

LOADING:
LIVE LOAD:
HS20
ROOF: 30% IMPACT UP TO 3' COVER, NO IMPACT ABOVE 3' COVER
WALLS: NO SURCHARGE
INVERT: NO IMPACT

UP TO 2' COVER
WHEEL LOAD DISTRIBUTION ON THE ROOF IS $E = 4' + .06S$ LONGITUDINALLY AND IS CONCENTRATED TRANSVERSELY. WHEEL LOAD DISTRIBUTION ON THE INVERT IS 7' LONGITUDINALLY AND UNIFORM OVER THE WIDTH OF THE CULVERT. TRAFFIC IS ANALYSED PARALLEL TO THE MAIN (TRANSVERSE) REINFORCEMENT.

OVER 2' COVER
WHEEL LOADS DISTRIBUTED UNIFORMLY OVER A SQUARE, THE SIDES OF WHICH ARE 1.75 TIMES THE DEPTH OF COVER, BUT NOT LESS LONGITUDINALLY THAN E ON THE ROOF, OR 7' ON THE INVERT AND UNIFORMLY OVER THE WIDTH OF THE INVERT. WHEN SUCH AREAS FROM SEVERAL WHEEL CONCENTRATIONS OVERLAP, THE TOTAL LOAD SHALL BE CONSIDERED AS UNIFORMLY DISTRIBUTED OVER THE AREA DEFINED BY THE OUTSIDE LIMITS OF THE INDIVIDUAL AREAS, BUT THE OVERALL LONGITUDINAL DIMENSION SHALL NOT EXCEED THE TOTAL LENGTH OF THE SUPPORTING SLAB. NEGLECT LIVE LOAD WHEN COVER IS GREATER THAN 8' AND EXCEEDS DISTANCE BETWEEN EXTERIOR WALLS.

EARTH LOAD:
EARTH PRESSURES FOR TWO CONDITIONS:
140 LBS/CU.FT. VERTICAL, 42 LBS/CU.FT. HORIZONTAL
140 LBS/CU.FT. VERTICAL, 140 LBS/CU.FT. HORIZONTAL

THE HORIZONTAL EARTH PRESSURE SHALL NOT BE DIMINISHED (FOR SLAB POSITIVE MOMENT, UP TO 3' COVER).

UNIT STRESSES:
$f'c = 3\frac{1}{4}$ KSI
$fy = 60$ KSI
$n = 9$

DISTRIBUTION "d" BARS:
UP TO 2' COVER
EXPRESSED AS A PERCENT OF MAIN POSITIVE REINFORCEMENT REQUIRED: $\frac{100}{\sqrt{S}}$, MAX. 50% (UNLESS TRAFFIC LONGITUDINAL).

OVER 2' COVER
#4 @ 18" MAXIMUM

SHEAR: MAXIMUM ALLOWABLE SHEAR, $v_c = 3.5\sqrt{f'_c}$
MAXIMUM SHEAR IS TAKEN AT A DISTANCE d FROM THE SUPPORTING MEMBER.

EXCLUSIONS:
COMPRESSIVE REINFORCEMENT AND NEGATIVE-MOMENT REDUCTION (FOR CONTINUITY) DO NOT APPLY. AXIAL LOADING ON MEMBERS HAS NOT BEEN CONSIDERED.

DESIGNATION:
STANDARD SINGLE OR MULTIPLE BOX CULVERTS ARE SHOWN ON PLANS AS SPAN TIMES HEIGHT WITH MAXIMUM COVER OVER ROOF THUS: 8 x 5 RCB WITH 10' OR DBL 10 x 5 RCB WITH 20', FOLLOWED BY ALTERNATIVES.

ALTERNATIVES:
SINGLE CELL: INVERT WILL BE SLOPED UNLESS "TRAPEZOIDAL INVERT", "FLAT INVERT" OR "V INVERT" IS INCLUDED IN DESIGNATION.
MULTIPLE CELL: INVERT WILL BE VEE UNLESS "FLAT INVERT" IS SPECIFIED.

ENDS OF CULVERT WILL BE ROUNDED UNLESS "SQUARE ENDS" ARE DESIGNATED.

PARAPETS WILL BE AS SHOWN UNLESS DESIGNATED IN PLANS. SUCH DESIGNATIONS MAY BE DIFFERENT FOR INLET AND OUTLET ENDS.

QUANTITIES:
QUANTITIES ARE FOR THE SLOPED OR VEE INVERT AND DO NOT INCLUDE "d" BARS, NOR SPLICES IN LONGITUDINAL BARS, NOR TEMPERATURE REINFORCEMENT FOR EXPOSED ROOF, NOR CONCRETE OR REINFORCEMENT FOR PARAPETS, CUTOFF WALLS OR PAVING NOTCHES.

REINFORCEMENT PLACEMENT:
MAIN REINFORCEMENT IS TO BE PLACED TRANSVERSE OR, FOR CURVED CULVERTS, RADIAL. WHEN RADIAL, REINFORCING SPACING IS MEASURED ALONG THE ℄.

SPECIAL REINFORCEMENT COVERAGE:
BOX STANDARD PLANS ARE NOT TO BE USED FOR CULVERTS IN A CORROSIVE ENVIRONMENT OR WHERE THERE IS A SEVERE ABRASIVE FLOW CONDITION.

SPECIAL DESIGN:
REQUIRED FOR CULVERTS WITH CONDITIONS, LOADS OR SIZES GREATER THAN THOSE GIVEN ON THIS PLAN OR THE STANDARD TABLES. ALSO REQUIRED FOR MULTIPLE CELL CULVERTS WITH UNEQUAL SPANS. FOR CULVERTS WITH RAILROAD LOADING, SEE THE CURRENT A.R.E.A. DESIGN SPECIFICATION.

3 OR MORE CELLS:
FOR CULVERTS WITH MORE THAN TWO CELLS, USE DIMENSIONS AND REINFORCEMENT FOR THE STANDARD "DOUBLE BOX CULVERT" AND ADJUST QUANTITIES ACCORDINGLY.

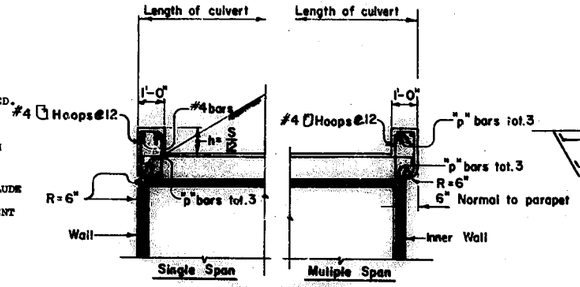

PART SECTION
S=Clear Span

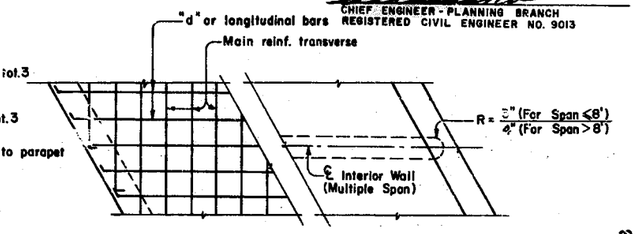

PART PLAN-SKEWED

Parapet "P" Bars			
Skew Angle / Span	0° TO 15°	16° TO 30°	31° TO 45°
4'	#4	#4	#4
6'	#4	#4	#5
8'	#4	#5	#6
10'	#5	#6	#7
12'	#6	#7	#8
14'	#7	#8	#9

PARAPET REINFORCEMENT

PARAPET DETAIL

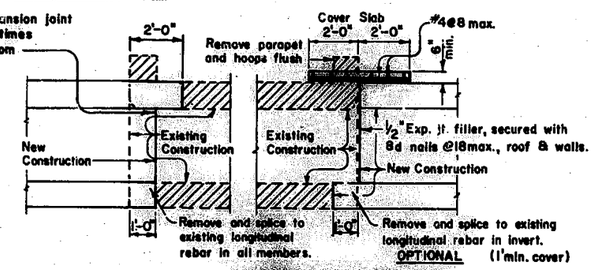

CULVERT EXTENSION
20° Skew Maximum

Height \ Cover	10'	20'
6'	1.0	1.6
8'	1.1	1.7
10'	1.2	1.8
12'	1.3	1.9
14'	1.4	2.0

DESIGN BEARING PRESSURE (TSF)

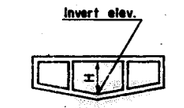

TYPICAL 3 CELL

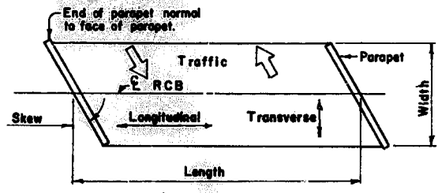

RCB TERMINOLOGY

CONSTRUCTION NOTES

CONSTRUCTION LOADS:
STRUTTING REQUIRED AS SHOWN ON STANDARD PLAN "CONSTRUCTION LOADS ON CULVERTS."

EXPANSION JOINTS:
INVERT:
NO EXPANSION JOINTS SHALL BE PERMITTED.
ROOF AND WALLS:
WHEN COVER IS LESS THAN SPAN LENGTH-
PLACE 1/2" EXPANSION JOINT FILLER AT 30'± CENTERS OUTSIDE THE PAVED ROADWAY LANES AND PLACE STANDARD BRIDGE DETAIL 3-2 AT 30' CENTERS UNDER PAVED ROADWAY LANES.
WHEN COVER IS MORE THAN SPAN LENGTH-
PLACE 1/2" EXPANSION JOINT FILLER AT 30'± CENTERS AND ADDITIONAL 1/2" EXPANSION JOINTS AT LOCATIONS OF CHANGE IN FOUNDATION CHARACTER, AS DIRECTED BY THE ENGINEER.

CONSTRUCTION JOINTS:
TEMPORARY JOINTS MAY BE PERMITTED IF NORMAL (OR RADIAL) TO ℄ OF RCB. OTHERWISE, THE CONTRACTOR IS TO SUBMIT A PROPOSAL FOR CONSIDERATION.

CUTOFF WALLS:
4' CUTOFF WALLS ARE TO BE PROVIDED AT INLET AND/OR OUTLET UNLESS ADJACENT CHANNEL IS LINED AND UNLESS OTHERWISE SHOWN. THESE WALLS ARE TO BE EXTENDED IF SCOUR CONDITIONS WARRANT.

EARTHWORK:
SEE STANDARD PLAN "CONSTRUCTION DETAILS, CONCRETE AND ASBESTOS CEMENT CULVERT".

BACKFILL:
SEE STANDARD SPECIFICATIONS, EXCEPT THAT THE DIFFERENCE IN LEVEL OF BACKFILL (AGAINST OUTSIDE WALLS) SHALL NOT EXCEED 2'.

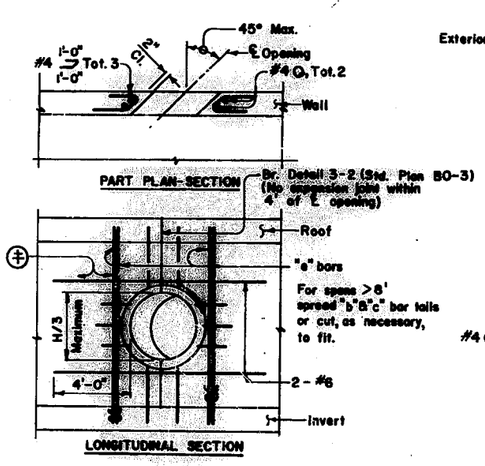

UTILITY OPENING-WALL
H = Height

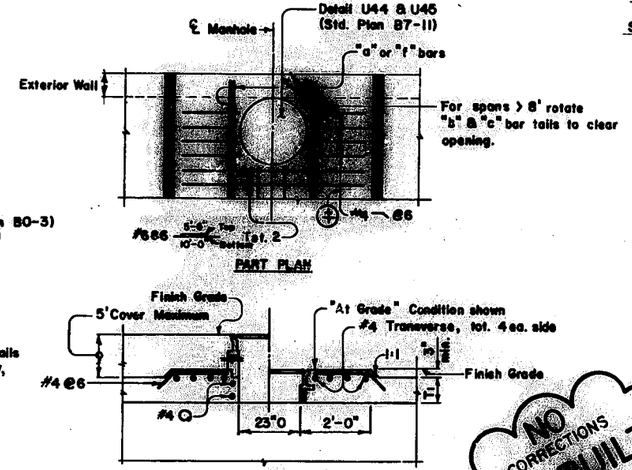

MANHOLE

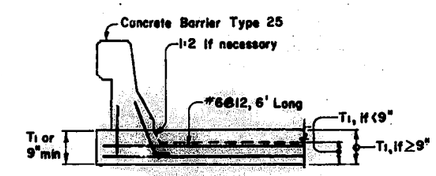

BARRIER SECTION (30' MINIMUM)

⊕ Adjacent to the opening, place additional bars equivalent to the interrupted reinforcement.

NO CORRECTIONS
AS BUILT
RESIDENT ENGINEER 2-24-78 DATE

SPECIAL DETAILS
BOX CULVERT
MISCELLANEOUS DETAILS

ND83

REDUCED PLAN
0 1 2 3
3 INCHES ON ORIGINAL PLAN

FILE NO. 158700 AB 173-178

FILE NO. 158700 AB 173-178

DE LEUW, CATHER & COMPANY
CONSULTING ENGINEERS
SAN FRANCISCO, CALIFORNIA

Aug. 77

COUNTY OF SAN BERNARDINO
TRANSPORTATION DEPARTMENT
HESPERIA AREA
BEAR VALLEY CUTOFF
APATITE STREET TO TAMARISK AVENUE
GENERAL PLAN & ELEVATION

W.O. NO. H 05-047 | FIELD BOOK REF.
SUBMITTED BY | RECOMMENDED/APPROVED BY
PROJECT ENGINEER DATE | ADMINISTRATION DATE
DATE | COUNTY ROAD COMMISSIONER DATE

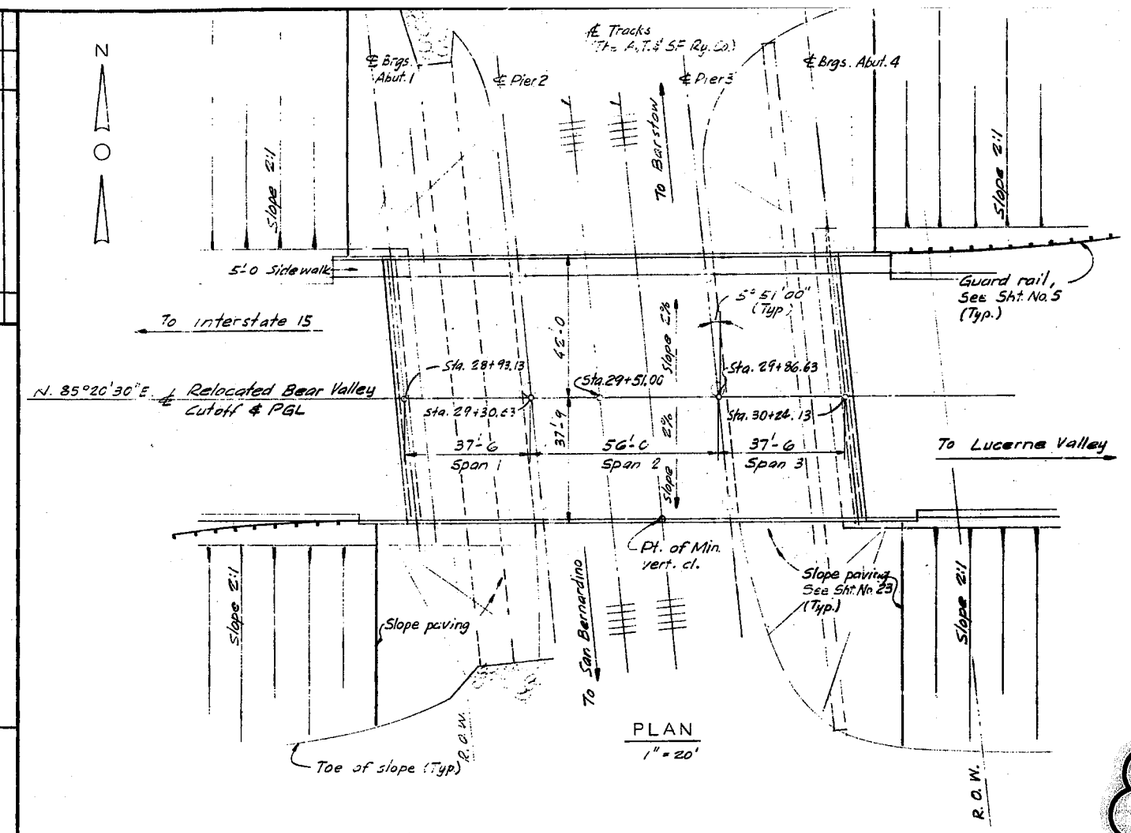

PLAN
1" = 20'

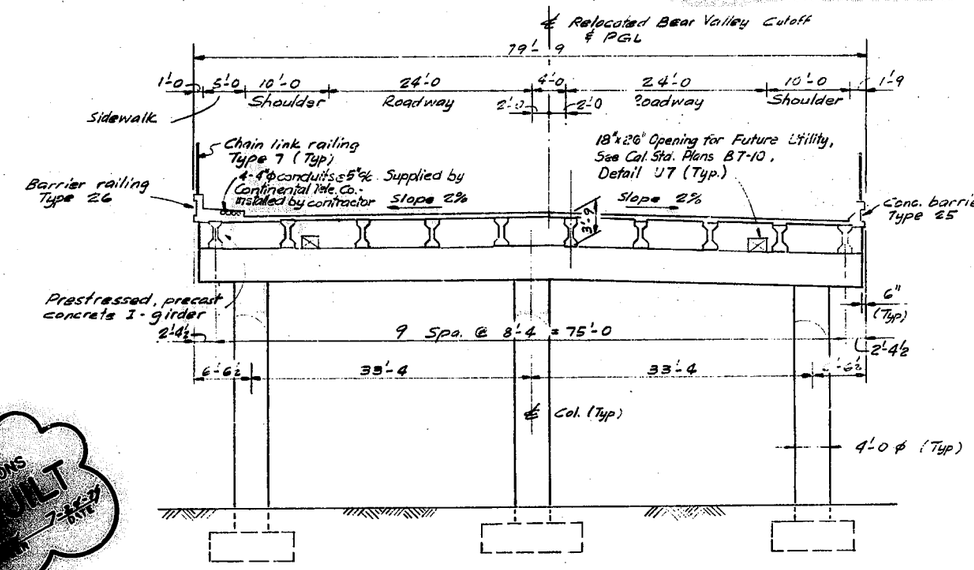

TYPICAL CROSS SECTION
⅛" = 1'-0

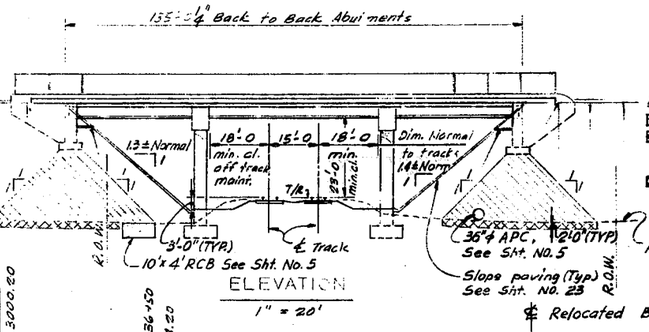

ELEVATION
1" = 20'

Note:
- 95% Compaction. For material see special provisions.
- Material removed will be paid for as roadway excavation.

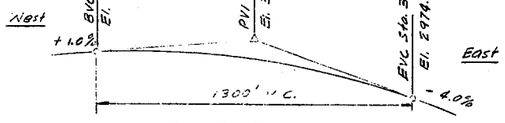

PROFILE GRADE
BEAR VALLEY CUTOFF
No Scale

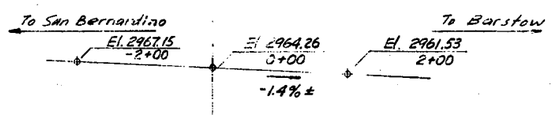

A.T. & S.F. RY. EAST TRACK ELEVATIONS
No Scale

NO CONNECTIONS
AS BUILT
7-28-77
DATE

GENERAL NOTES

DESIGN SPECIFICATIONS: American Association of State Highway and Transportation Officials Standard Specifications for Highway Bridges, 11th Edition, dated 1973, and Interim Specifications for Bridges, dated through 1977, State of California Division of Highways Bridge Planning & Design Manual.

CONSTRUCTION SPECIFICATIONS: Standard Specifications, State of California, Department of Transportation, dated January 1975, and the Special Provisions.

STANDARD PLANS: Plans supplemented by Standard Plans, State of California, Department of Transportation, dated March 1977.

DESIGN LOADING:

Deadload: Includes 35 psf allowance for future wearing surface.
Liveload: AASHTO HS20-44
P-13 shown below: ——— (Load Factor Design only).

Load Factor Design used for superstructure and pier columns (with governing live load).

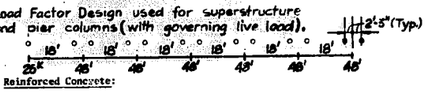

CONCRETE: Reinforced Concrete:

f'_c = 3250 psi ultimate compressive strength at 28 days
f_c = 1500 psi
n = 10

Prestressed Concrete:

See Notes on Sheet 2.

PRESTRESSING STEEL: See Specifications

REINFORCEMENT: All reinforcing bars shall be ASTM A615 deformed billet steel, Grade 60, f_y min = 60,000 psi.
f_s = 20,000 psi (transverse deck slab reinforcement and stirrups)
f_s = 24,000 (all other reinforcing steel)

Bars to be bent according to the ACI Manual of Standard Practice. Dimensions to center of bars unless otherwise shown. Minimum coverage to reinforcing bars 2 inches unless otherwise shown on drawings.

Minimum lapped splice lengths shall be as follows:

Size of Bar	Length of Splice
No. 8 and smaller	45 bar diameters
No. 9, 10 and 11	60 bar diameters

Size of Bundle	Length of Splice
2 bar bundle	1.2 times the length of single bar splice
3 bar bundle	1.33 times the length of single bar splice

CONSTRUCTION JOINTS: No construction joints shall be used except by permission of the Engineer or as shown on the Plans.

FOUNDATIONS:

Piers - Spread Footing, allowable load 3.5 tons per square foot.
Abutments - Spread Footing, allowable load 3.5 tons per square foot.

DATUM: See Civil Drawing Sheet 5.

FOR QUANTITIES AND LIST OF STANDARD PLANS, SEE SHT. No. 23

REDUCED PLAN
0 1 2 3
3 INCHES ON ORIGINAL PLAN

MARK	REVISIONS	APPR.	DATE

DESIGNED BY H. Chin | CHECKED BY R. Lee | DRAWN BY R. Petersen

173-178
FILE NO. 158700 AB

173-178
FILE NO. 158700 AB

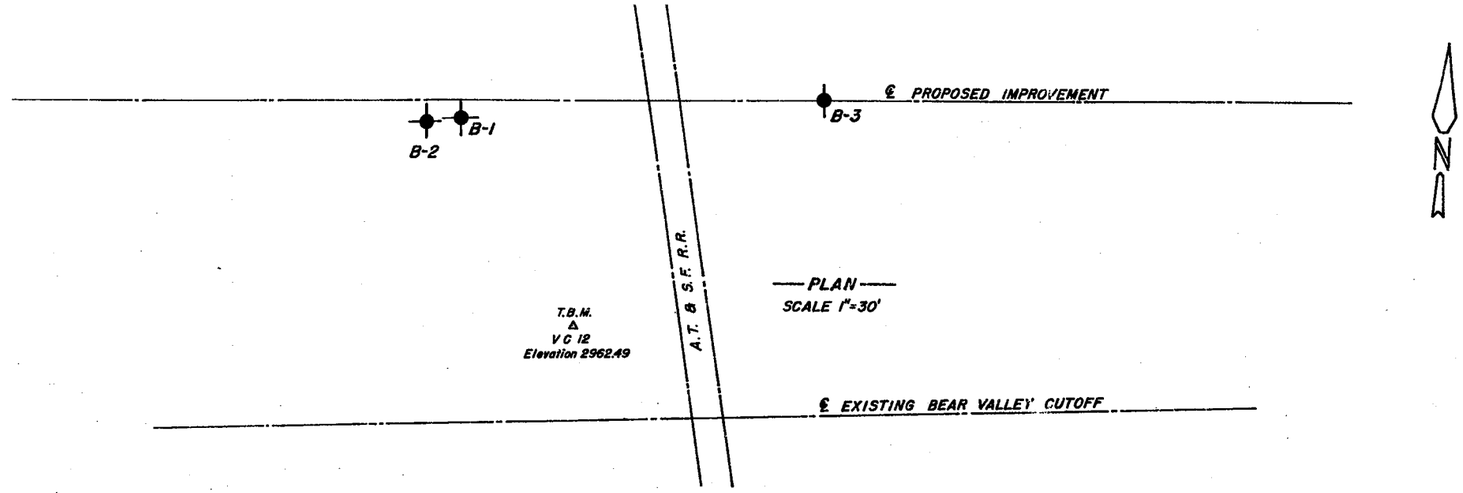

—PLAN—
SCALE 1"=30'

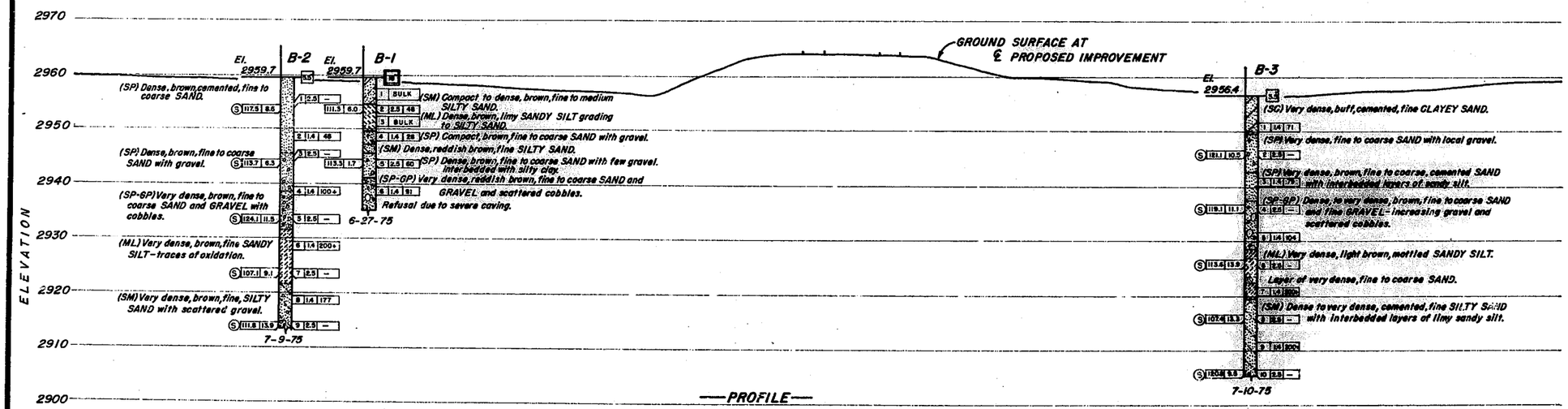

—PROFILE—
SCALE Horiz. & Vert. 1"=10'

NO CORRECTIONS
AS BUILT
RESIDENT ENGINEER
7-24-75
DATE

LEGEND OF EARTH MATERIALS

UNIFIED SOIL CLASSIFICATION

Pt	OH	CH	MH	OL	CL	ML	SC	SW	SP	SM	GC	GM	GP	GW
Highly organic soils	Silts and clays Liquid limit greater than 50		Silts and clays Liquid limit less than 50				Sands with fines >12% fines		Clean sands <5% fines		Gravels with fines >12% fines		Clean gravels <5% fines	

Fine grained soils (More than 50% is smaller than No 200 sieve)

Sands: more than 50% of coarse fraction is smaller than No 4 sieve. Gravels: more than 50% of coarse fraction is larger than No 4 sieve.

Coarse grained soils (More than 50% is larger than No 200 sieve)

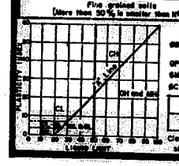

LABORATORY CLASSIFICATION CRITERIA

GW and SW- $C_u = \frac{D_{60}}{D_{10}}$ greater than 4 for GW, 6 for SW; $C_c = \frac{(D_{30})^2}{D_{10} \times D_{60}}$ between 1 & 3.

GP and SP- Clean gravel or sand not meeting requirements for GW and SW.

GM and SM- Atterberg limits below "A" line or P.I. less than 4.

GC and SC- Atterberg limits above "A" line with P.I. greater than 7.

Fines (silt or clay)	Fine sand	Medium sand	Coarse sand	Fine gravel	Coarse gravel	Cobbles	Boulders
Sieve sizes	#200	#40	#10	#4	3/4"	3"	12"

Classification of earth materials shown on this sheet is based on field inspection and should not be construed to imply laboratory analysis, unless so stated.

MATERIAL SYMBOLS

Gravel; Sand; Silt; Clay; Sandy clay or clayey sand; Sandy silt or silty sand; Silty clay or clayey silt; Peat or organic matter; Fill material; Shale; Sandstone; Limestone; Metamorphic rock; Igneous rock

CONSISTENCY CLASSIFICATION FOR SOILS

According to the Standard Penetration Test

Nº of blows	Granular	Cohesive
0-5	Very loose	Very soft
6-10	Loose	Soft
11-20	Semicompact	Stiff
21-35	Compact	Very stiff
36-70	Dense	Hard
>70	Very dense	Very hard

LEGEND OF BORING OPERATIONS

Plan of any boring
Rotary boring
Diamond core boring
Auger boring
Sample boring
Jet boring
Test pit
2½" Cone penetrometer
2½" Cone penetrometer

ROTARY BORING

Location B-No.
Top hole elev.
Depth of hole
Moisture (% dry wt.)
Dry density (lbs./cu.ft.)
Unconfined compressive strength (tons/sq.ft.)
Designates other soils tests
C - Consolidation
S - Direct shear
E - Expansion
T - Triaxial compression
Sample number
Size of sample (inches)
Blows per foot (Using a 140 lb. hammer with a 30" drop)
Elevation
Date
Conformable material change
Approximate material change
Unconformable material change
Date boring started

PENETRATION TEST

Location B-No.
Top hole elev.
Pushed
Blows per foot (Using 140 lb. hammer with 30" drop)
Graphic representation of driving resist.
Date
20
40
Blows per foot

MOORE & TAYLOR - Engineers - Geologists

APPROVED R. J. Moore 7-30-75
REGISTERED CIVIL ENGINEER No. 6589

JOB No. 175-577

L.D. KING ENGINEERING CO.

BEAR VALLEY CUTOFF AT A.T.&S.F. R.R.
SAN BERNARDINO COUNTY, CALIFORNIA

LOG OF TEST BORINGS

Scale As Shown | Date | Sheet 15 of 23

REDUCED PLAN
0 1 2 3
3 INCHES ON ORIGINAL PLAN

173-178
FILE NO. 158700 AB

173-178
FILE NO. 158700 AB

DATE	APPR.	REVISIONS	MARK

COUNTY OF SAN BERNARDINO
COMPTON, CHRISTE & CORTRIGHT
CONSULTING ENGINEERS
SAN FRANCISCO, CALIFORNIA

Aug. 77

REGISTERED PROFESSIONAL ENGINEER HARRY CHIN No. 20022 CIVIL STATE OF CALIFORNIA

TRANSPORTATION DEPARTMENT

HESPERIA AREA

BEAR VALLEY CUTOFF

APATITE STREET TO TAMARISK AVENUE

FOUNDATION PLAN AND MISCELLANEOUS DETAILS

W.O. NO. H05347 | FIELD BOOK REF.

SUBMITTED BY — PROJECT ENGINEER — DATE

RECOMMENDED/APPROVED BY — ROAD SUPT. — ADMINISTRATION — DATE — DISTRICT ROAD COMMISSIONER — DATE

FILE NO. 173-178 158700 AB

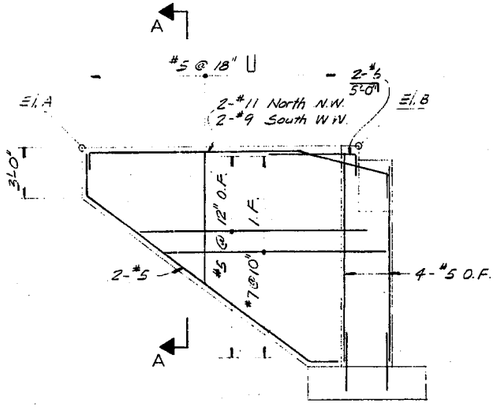

WINGWALL ELEVATION
1/4" = 1'-0"

WINGWALL ELEVATIONS		
LOCATION	A	B
Abut. 1 North W.W.	92.81	92.65
South W.W.	92.81	92.67
Abut. 4 North W.W.	90.71	90.91
South W.W.	90.66	90.87

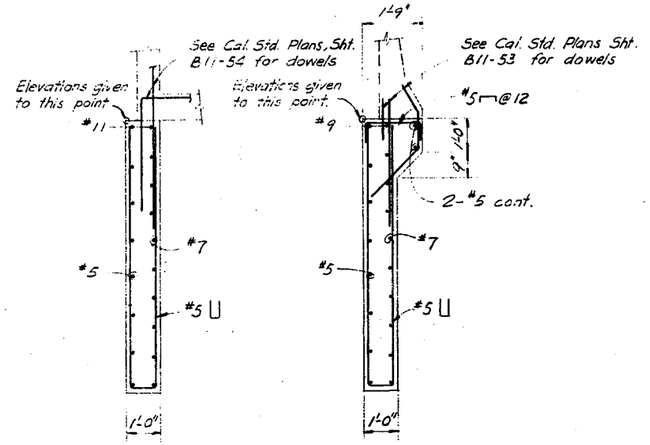

NORTH W.W. SOUTH W.W.

SECTION A-A
1/2" = 1'-0"

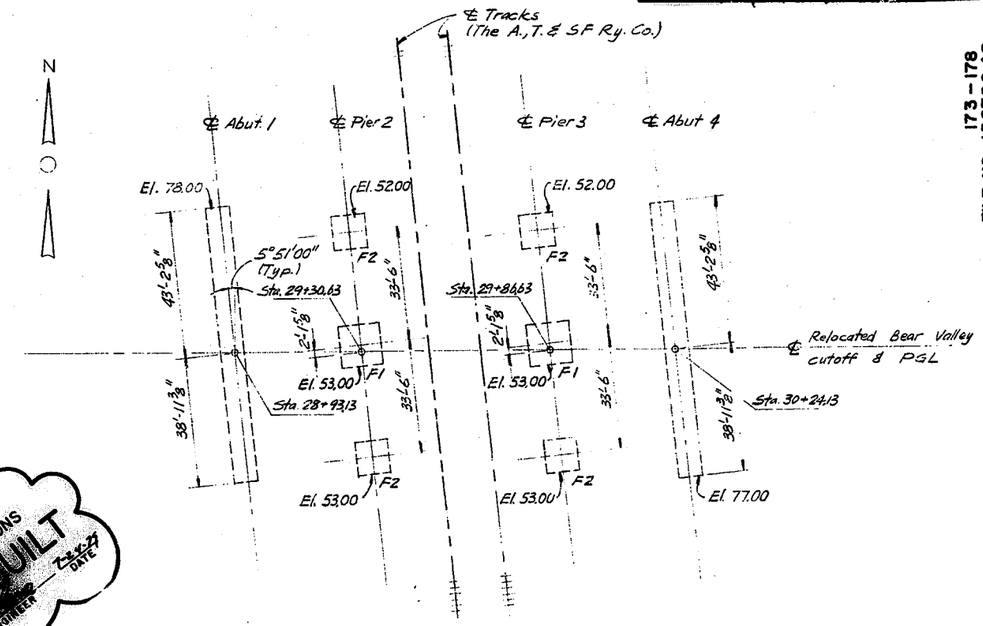

FOUNDATION PLAN
1" = 20'

ELEVATION SECTION

RESTRAINERS AT ABUTMENTS
No Scale

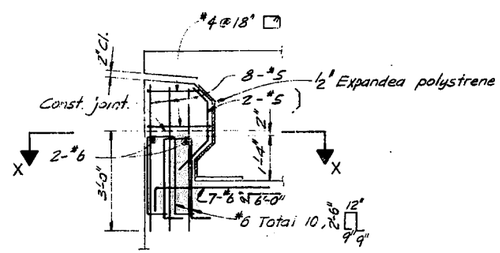

DETAIL 1
1/2" = 1'-0"

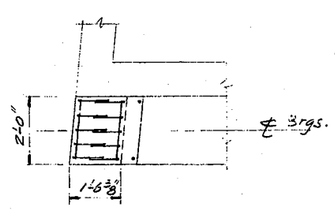

SECTION X-X
1/2" = 1'-0"

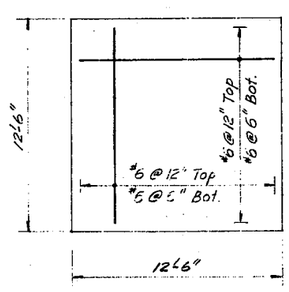

PLAN

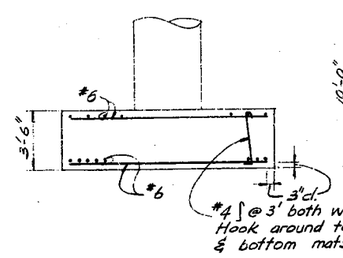

ELEVATION

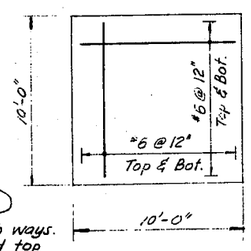

PLAN

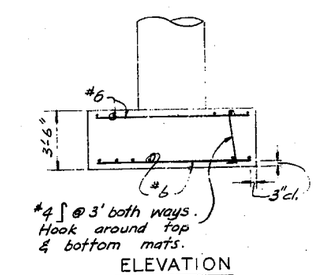

ELEVATION

FOOTING F1
1/4" = 1'-0"

FOOTING F2
1/4" = 1'-0"

NO CORRECTIONS AS BUILT
RESIDENT ENGINEER DATE

DESIGNED BY	DRAWN BY	CHECKED BY
H. Chin	E. Lok	R. Peterson

FILE NO. 173-178 158700 AB

REDUCED PLAN
0 1 2 3
3 INCHES ON ORIGINAL PLAN

DE LEUW, CATHER & COMPANY
CONSULTING ENGINEERS
SAN FRANCISCO, CALIFORNIA

Aug. 77

REGISTERED PROFESSIONAL ENGINEER — HARRY CHIN — No. 22922 — CIVIL — STATE OF CALIFORNIA

COUNTY OF SAN BERNARDINO
TRANSPORTATION DEPARTMENT
HESPERIA AREA

BEAR VALLEY CUTOFF

APATITE STREET TO TAMARISK AVENUE

ABUTMENT 1

W.O. NO. H 05347 | FIELD BOOK REF.

SUBMITTED BY — PROJECT ENGINEER — DATE 1/25/78

RECOMMENDED/APPROVED BY — DIR. TRANSP. - ADMINISTRATION — DATE 1/26/78 — COUNTY TRANS COMMISSIONER — DATE 1-25-78

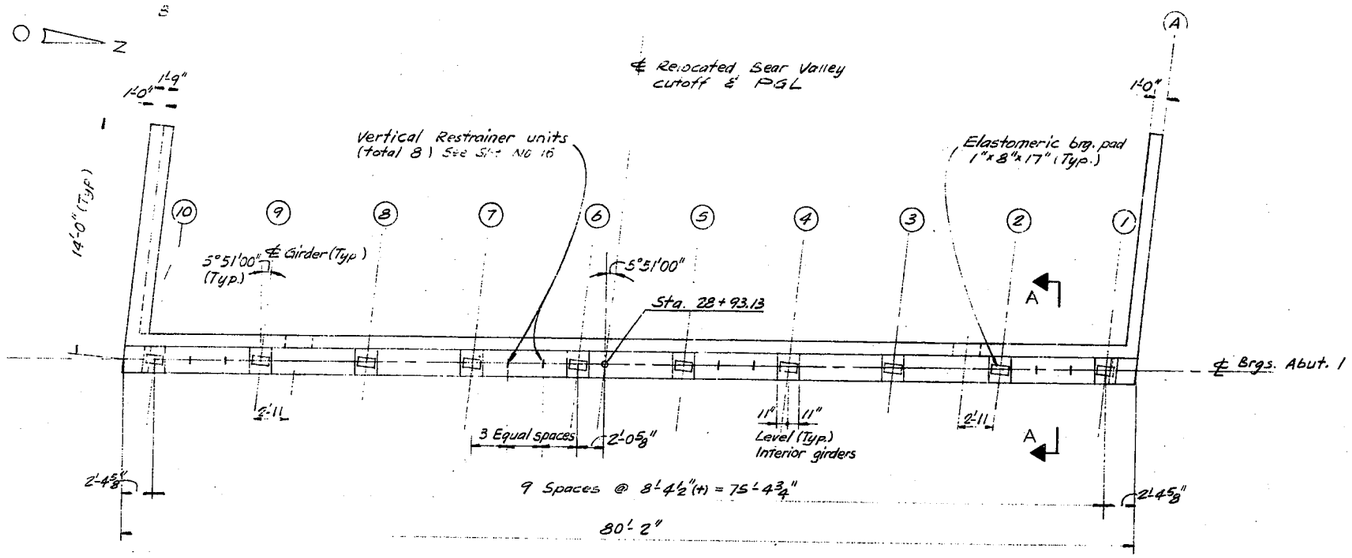

PLAN
3/16" = 1'-0"

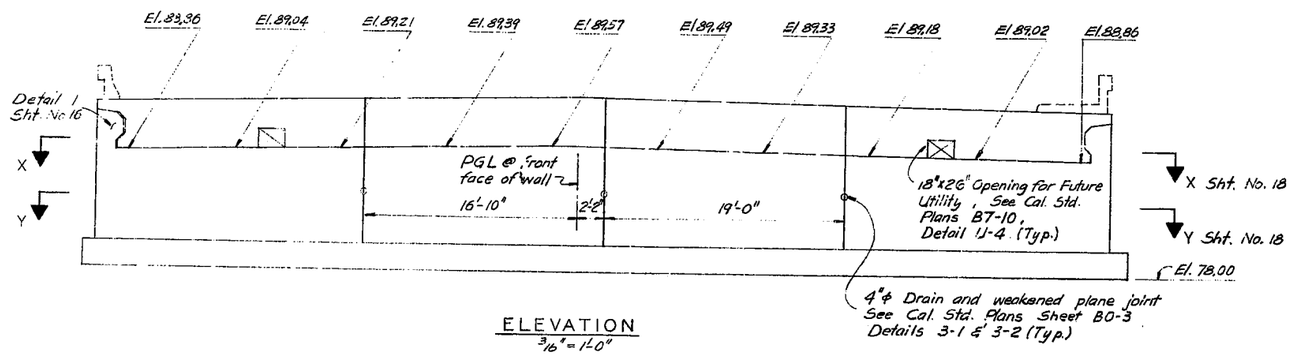

ELEVATION
3/16" = 1'-0"

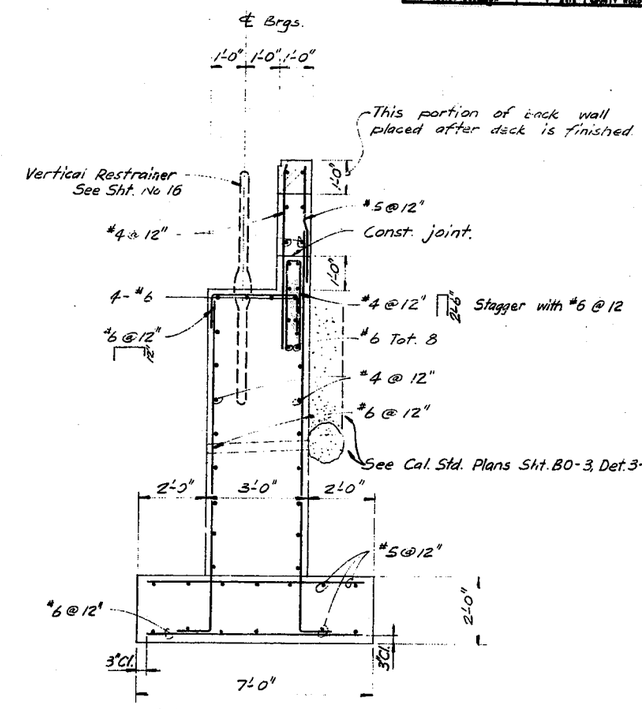

SECTION A-A
1/2" = 1'-0"

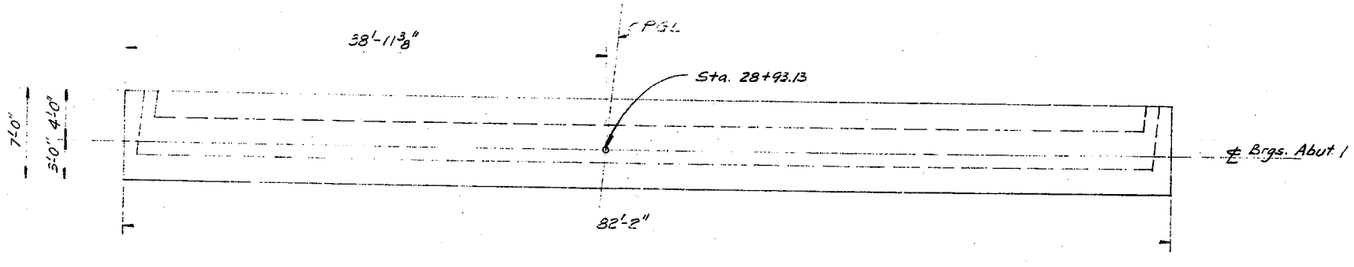

FOOTING PLAN
3/16" = 1'-0"

NO CORRECTIONS
AS BUILT
RESIDENT ENGINEER — DATE 7-24-79

173-178
FILE NO. 158700 AB

DESIGNED BY H. Chin | DRAWN BY E. Loh | CHECKED BY R. Peterson

173-178
FILE NO. 158700 AB

REDUCED PLAN
0 1 2 3
3 INCHES ON ORIGINAL PLAN

CONSULTING ENGINEERS
SAN FRANCISCO, CALIFORNIA

Aug. 77

REGISTERED PROFESSIONAL ENGINEER HARRY CHIN No 22922 CIVIL STATE OF CALIFORNIA

TRANSPORTATION DEPARTMENT

HESPERIA AREA

BEAR VALLEY CUTOFF

APATITE STREET TO TAMARISK AVENUE

ABUTMENT 4

W.O. NO. H0337 | FIELD BOOK REF.

SUBMITTED BY — PROJECT ENGINEER — DATE — CHIEF BRIDGE ENGINEER — DATE

RECOMMENDED & APPROVED BY — CHIEF ENGINEER - ADMINISTRATION — DATE — COUNTY ROAD COMMISSIONER — DATE

FILE NO. 173-178 158700 AB

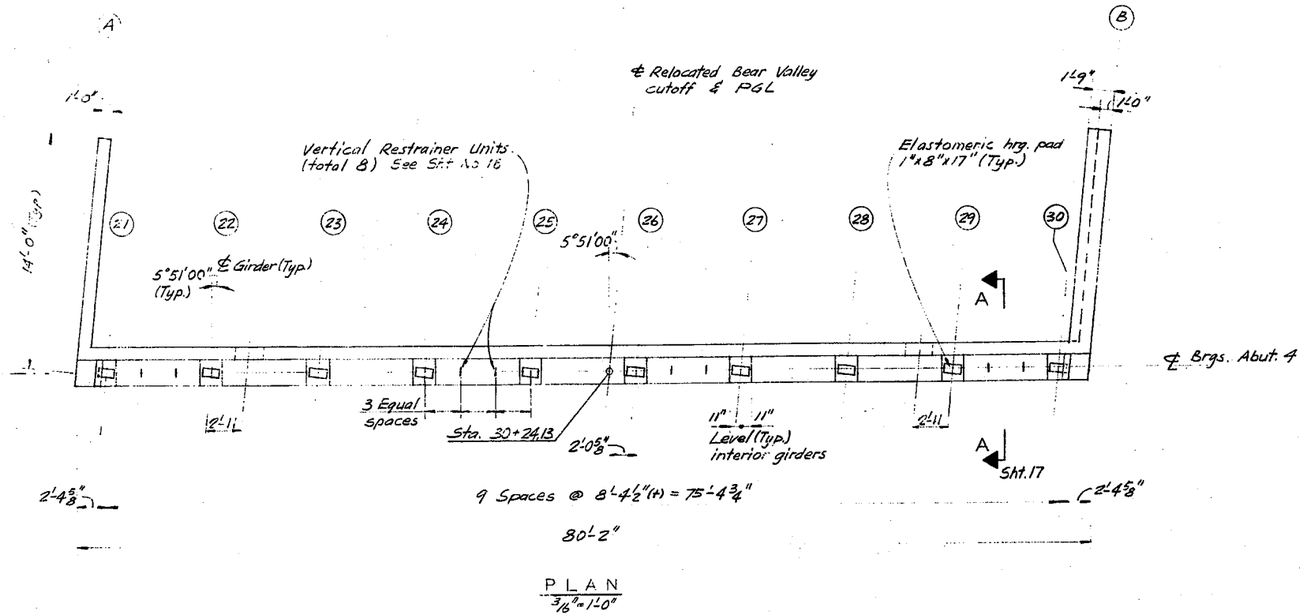

PLAN
3/16" = 1'-0"

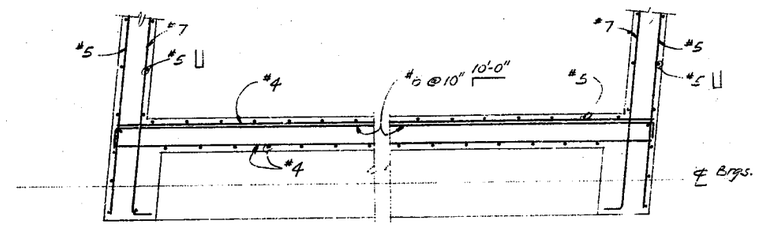

SECTION X-X
1/2" = 1'-0"

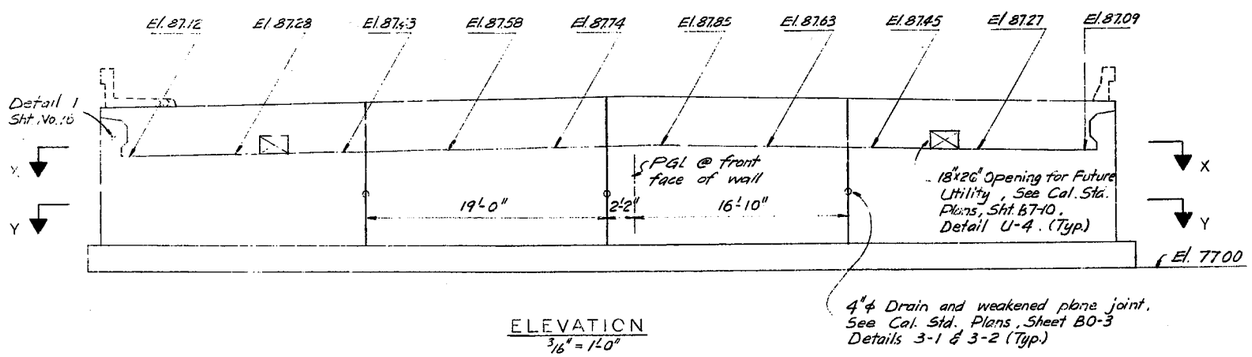

ELEVATION
3/16" = 1'-0"

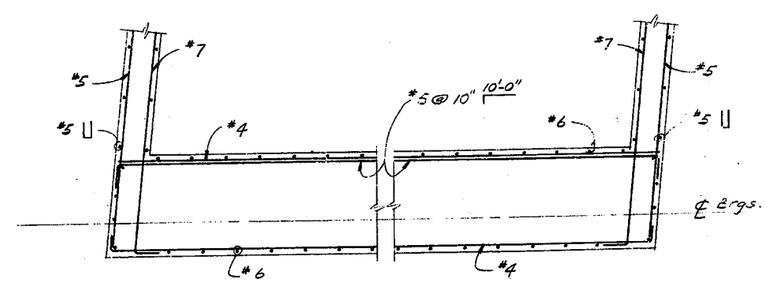

SECTION Y-Y
1/2" = 1'-0"

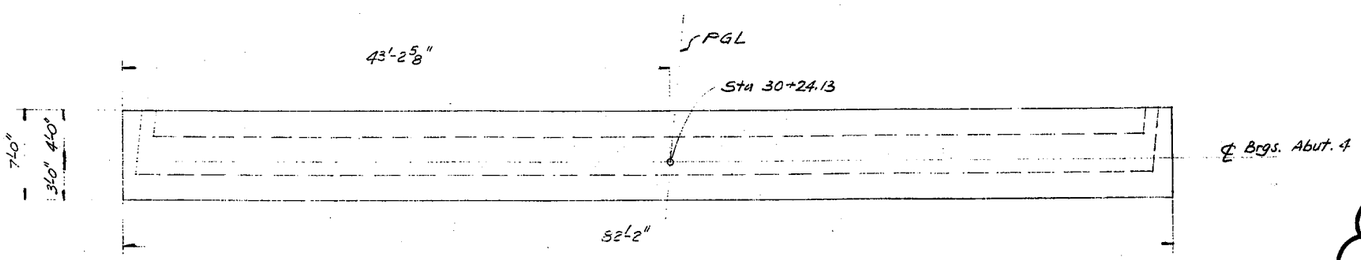

FOOTING PLAN
3/16" = 1'-0"

NO CORRECTIONS
AS BUILT
RESIDENT ENGINEER
2-24-78
DATE

DESIGNED BY	DRAWN BY	CHECKED BY
H. Chin	E. Loh	R. Peterson

FILE NO. 173-178 158700 AB

REDUCED PLAN
0 1 2 3
3 INCHES ON ORIGINAL PLAN

CONSULTING ENGINEERS
SAN FRANCISCO, CALIFORNIA

Aug. '77

REGISTERED PROFESSIONAL ENGINEER
LARRY UNDA
No. 22922
CIVIL
STATE OF CALIFORNIA

TRANSPORTATION DEPARTMENT

HESPERIA AREA

BEAR VALLEY CUTOFF

APATITE STREET TO TAMARISK AVENUE

PIERS 2 & 3

W.O. NO. H08347 | FIELD BOOK REF.

SUBMITTED BY | RECOMMENDED/APPROVED BY

PROJECT ENGINEER | DATE | ADMINISTRATION | DATE

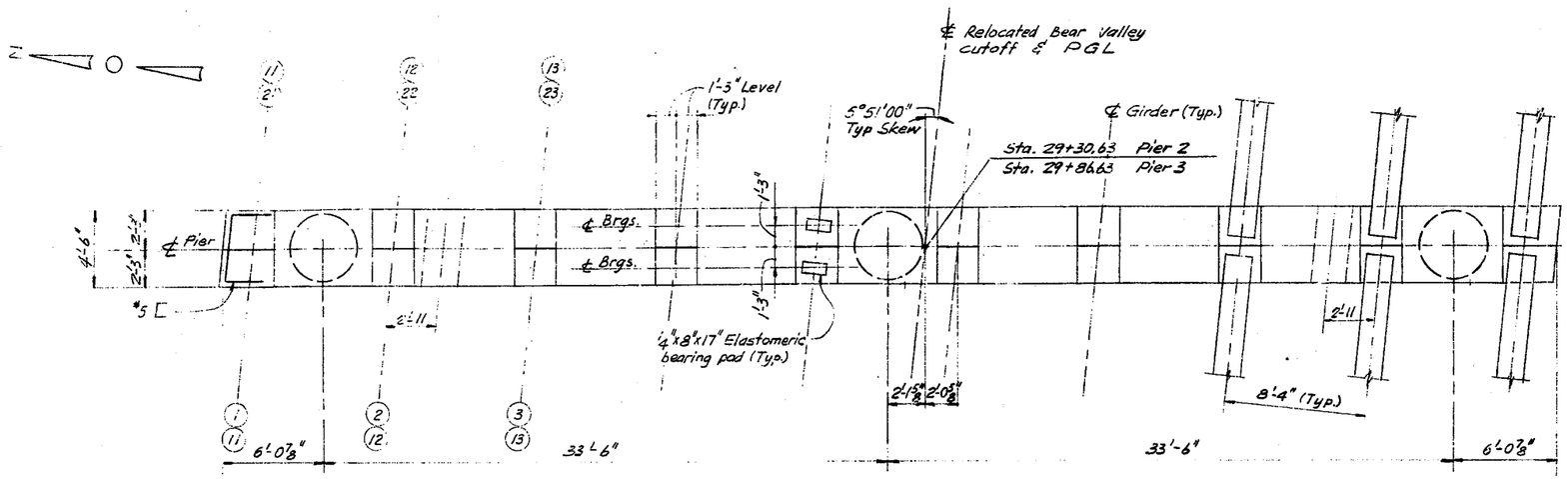

PLAN
¼"=1'-0"

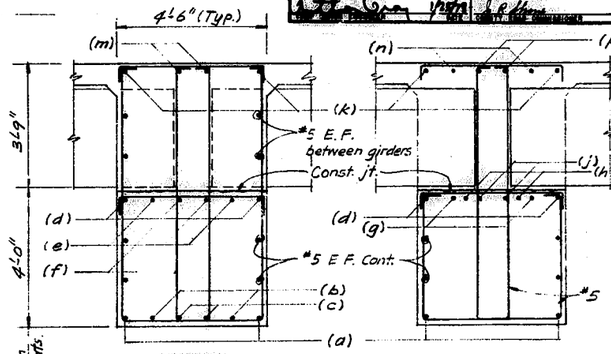

SECTION A-A
½"=1'-0"
Between Girders

SECTION B-B
½"=1'-0"
At Girder

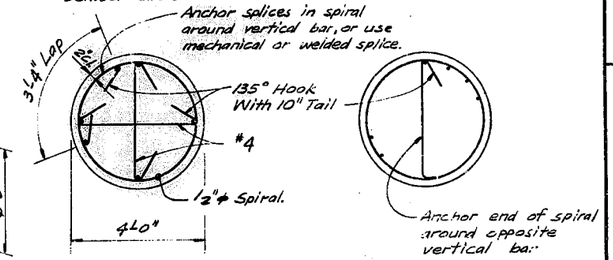

SECTION C-C
½"=1'-0"

DETAIL 1
½"=1'-0"

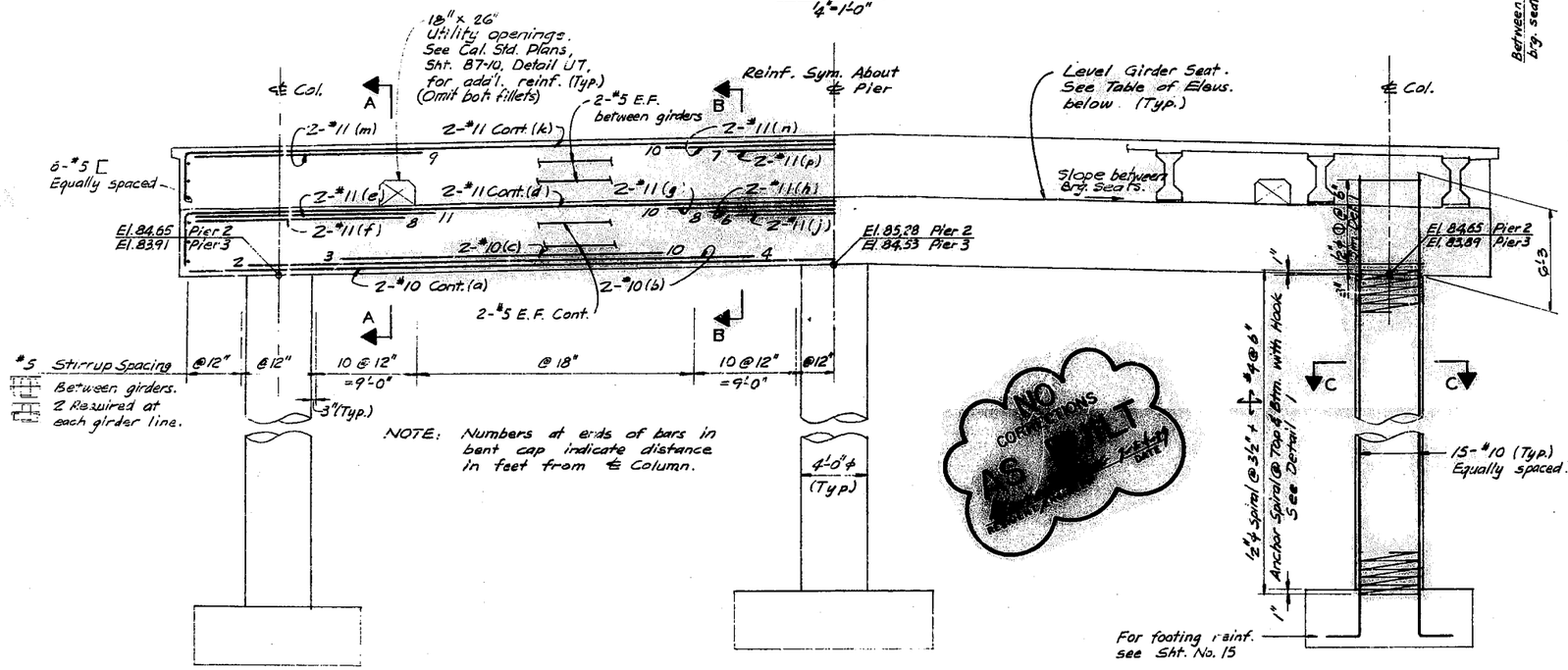

ELEVATION
¼"=1'-0"

Note: Add 2900.00 to all tabulated elevations.

GIRDER SEAT ELEVATIONS						
Girder	Pier 2		Girder	Pier 3		Girder
1	88.51	88.48	11	87.77	87.73	21
2	88.67	88.63	12	87.92	87.88	22
3	88.82	88.79	13	88.07	88.04	23
4	88.98	88.95	14	88.23	88.20	24
5	89.13	89.10	15	88.39	88.35	25
6	89.21	89.18	16	88.46	88.42	26
7	89.03	89.00	17	88.28	88.24	27
8	88.85	88.82	18	88.10	88.07	28
9	88.68	88.65	19	87.92	87.89	29
10	88.50	88.47	20	87.74	87.71	30

NO CORRECTIONS AS BUILT

173-178
FILE NO. 158700 AB

DESIGNED BY H. Chin | DRAWN BY E. Loh | CHECKED BY R. Anderson

173-178
FILE NO. 158700 AB

REDUCED PLAN
0 1 2 3
3 INCHES ON ORIGINAL PLAN

DE LEUW, CATHER & COMPANY
CONSULTING ENGINEERS
SAN FRANCISCO, CALIFORNIA

Aug. 77

REGISTERED PROFESSIONAL ENGINEER HARRY HIM No. 22922

COUNTY OF SAN BERNARDINO
TRANSPORTATION DEPARTMENT
HESPERIA AREA

BEAR VALLEY CUTOFF

APATITE STREET TO TAMARISK AVENUE

DECK PLAN & GIRDER LAYOUT

W.O. NO. H06437 | FIELD BOOK REF.
SUBMITTED BY | RECOMMENDED/APPROVED BY
PROJECT ENGINEER | DATE | ADMINISTRATION | DATE

173-178
FILE NO. 158700 AB

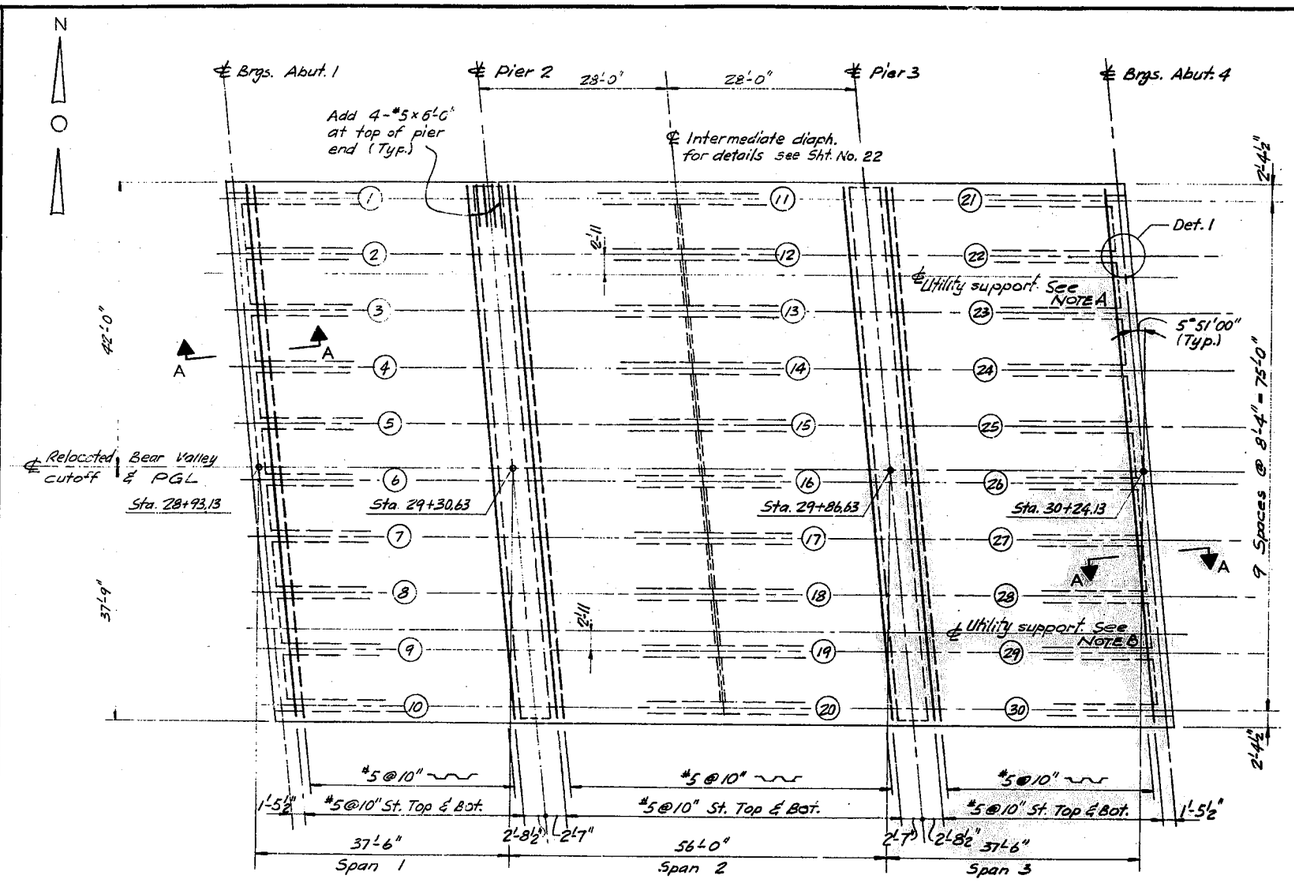

DECK PLAN
1" = 10'

NOTE A
Anchor bolts to be supplied by Southwest Gas Corp and installed by contractor.

NOTE B
Anchor bolts to be supplied by Hesperia County Water District and installed by contractor.

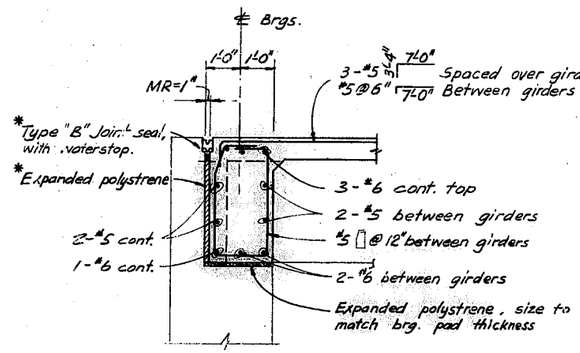

* NOTE: For construction dimensions of saw cuts and thickness of expanded polystrene to be used for joint seal size required see Cal. Std. Plans Sheet B6-21 and Sheet B0-3

SECTION A - A
½" = 1'-0"

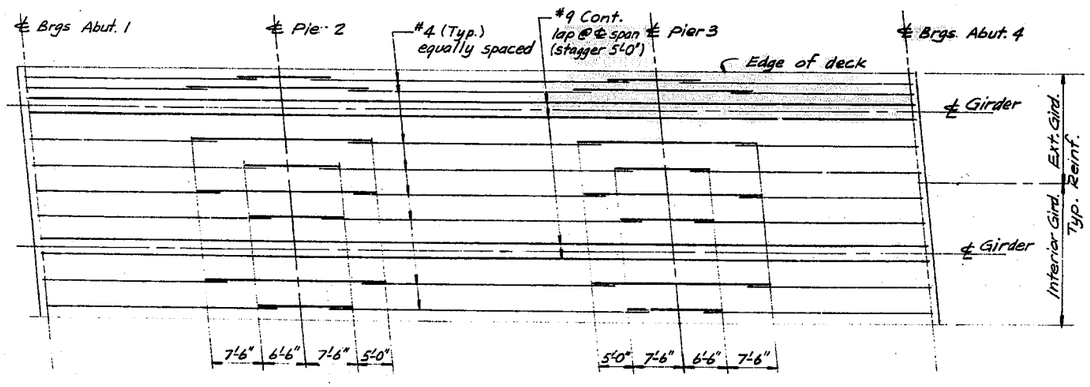

TOP LONGITUDINAL REINFORCEMENT
No Scale
All reinforcement #9 unless noted otherwise

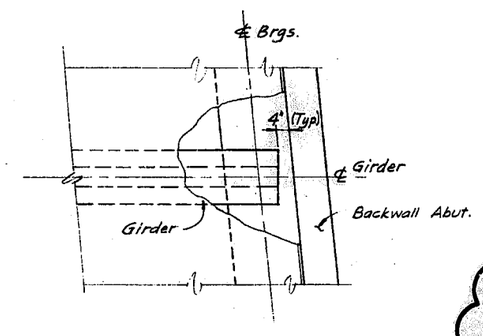

DETAIL 1
No scale

NO CORRECTIONS
AS BUILT
DATE

173-178
FILE NO. 158700 AB

REDUCED PLAN
0 1 2 3
3 INCHES ON ORIGINAL

DE LEUW, CATHER & COMPANY
CONSULTING ENGINEERS
SAN FRANCISCO, CALIFORNIA

Aug. 77

REGISTERED PROFESSIONAL ENGINEER HARRY CHIN No. 22922 CIVIL

COUNTY OF SAN BERNARDINO
TRANSPORTATION DEPARTMENT
HESPERIA AREA

BEAR VALLEY CUTOFF

APATITE STREET TO TAMARISK AVENUE
DECK DETAILS AND
MISCELLANEOUS DETAILS

W.O. NO. H 053347 | FIELD BOOK REF.
SUBMITTED BY | RECOMMENDED/APPROVED BY
PROJECT ENGINEER DATE | DIRECTOR - ADMINISTRATION DATE
1/25/82 | 1/25/82

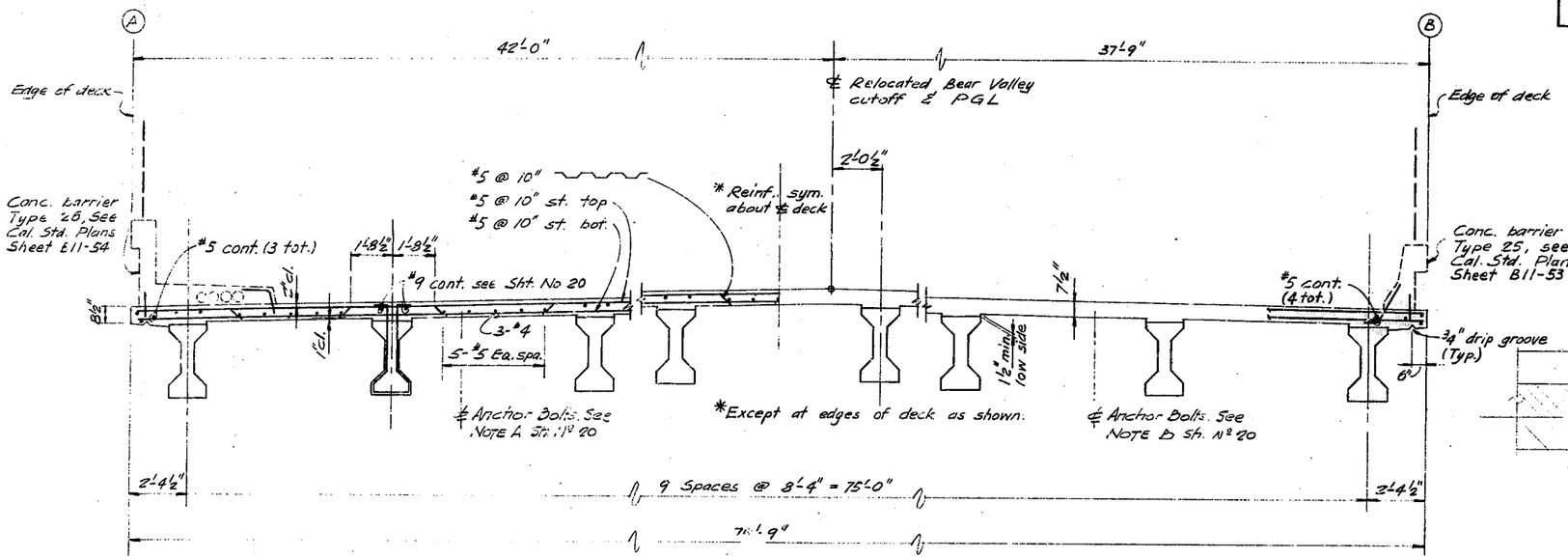

Note: For top deck longitudinal reinforcing see Sheet No. 20
For spacing of #5 transverse deck steel, see Cal. Std. Plans Sheet B0-5, Bridge Detail 5-10

TYPICAL SECTION
⅜" = 1'-0"

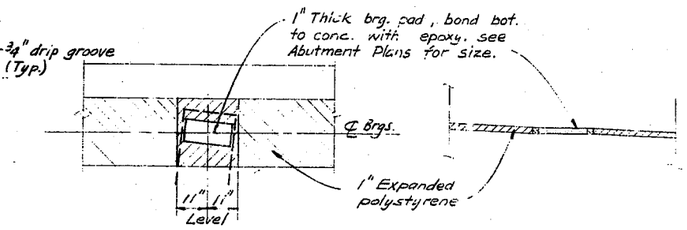

ABUTMENT BEARING SEAT DETAIL
½" = 1'-0"

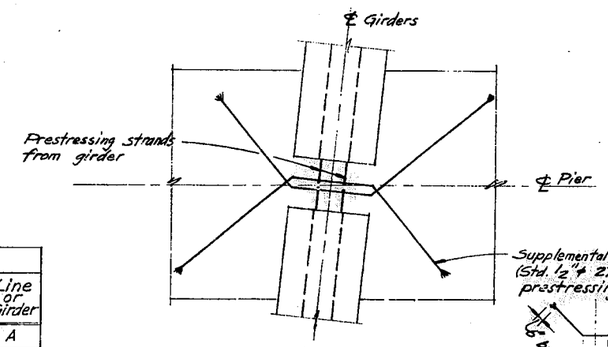

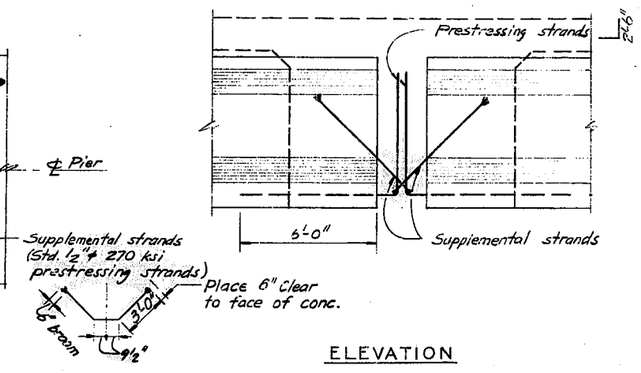

SUPPLEMENTAL STRANDS AT GIRDERS
¾" = 1'-0"

TABLE OF THEORETICAL DECK ELEVATIONS

Line or Girder	SPAN 1 ℄ Brg. Abut. 1	¼	½	¾	℄ Pier 2	Line or Girder	SPAN 2 ℄ Pier 2	¼	½	¾	℄ Pier 3	Line or Girder	SPAN 3 ℄ Pier 3	¼	½	¾	℄ Brg. Abut. 4	Line or Girder
A	92.66	92.56	92.46	92.35	92.24	A	92.24	92.06	91.88	91.69	91.49	A	91.49	91.36	91.22	91.08	90.93	A
1	92.71	92.61	92.50	92.39	92.28	1-11	92.28	92.11	91.92	91.74	91.54	11-21	91.54	91.40	91.26	91.12	90.97	21
2	92.87	92.76	92.66	92.55	92.44	2-12	92.44	92.26	92.08	91.89	91.69	12-22	91.69	91.56	91.42	91.27	91.13	22
3	93.02	92.92	92.82	92.71	92.59	3-13	92.59	92.42	92.23	92.04	91.85	13-23	91.85	91.71	91.57	91.43	91.28	23
4	93.18	93.08	92.97	92.86	92.75	4-14	92.75	92.57	92.39	92.20	92.00	14-24	92.00	91.86	91.72	91.58	91.43	24
5	93.34	93.24	93.13	93.02	92.91	5-15	92.91	92.73	92.55	92.35	92.16	15-25	92.16	92.02	91.88	91.73	91.59	25
PGL	93.46	93.35	93.25	93.14	93.02	PGL	93.02	92.85	92.66	92.47	92.27	PGL	92.27	92.14	91.99	91.85	91.70	PGL
6	93.42	93.31	93.20	93.09	92.98	6-16	92.98	92.80	92.62	92.43	92.23	16-26	92.23	92.09	91.95	91.81	91.66	26
7	93.24	93.14	93.03	92.92	92.80	7-17	92.80	92.63	92.44	92.25	92.05	17-27	92.05	91.91	91.77	91.63	91.48	27
8	93.06	92.96	92.85	92.74	92.63	8-18	92.63	92.45	92.26	92.07	91.87	18-28	91.87	91.73	91.59	91.45	91.30	28
9	92.89	92.78	92.67	92.56	92.45	9-19	92.45	92.27	92.08	91.89	91.69	19-29	91.69	91.55	91.41	91.27	91.12	29
10	92.71	92.61	92.50	92.39	92.27	10-20	92.27	92.09	91.91	91.71	91.51	20-30	91.51	91.37	91.23	91.09	90.94	30
B	92.66	92.56	92.45	92.34	92.22	B	92.22	92.04	91.86	91.66	91.46	B	91.46	91.32	91.18	91.03	90.88	B

NO CONTRACTIONS AS BUILT
DATE

173-178
FILE NO. 158700 AB

DESIGNED BY H. Chin | DRAWN BY E. Loh | CHECKED BY R. Peterson

173-178
FILE NO. 158700 AB

REDUCED PLAN
0 1 2 3
3 INCHES ON ORIGINAL PLAN

DESIGN ENGINEER — REGISTERED CIVIL ENGINEER NUMBER

DATE APPROVED

173–178
FILE NO. 158700 AB

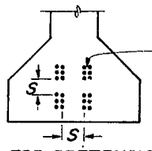

CLEARANCES FOR PRETENSIONED STRANDS

1. Strands may be bundled in groups consisting of 3 vertically and 2 horizontally, and separated at the ends
2. The min. distance "S" between groups or individual strands is 1½" for ⅜" strands, 1¾" for 7/16" strands and 2" for ½" strands.
3. "S" is measured between centers of adjacent strands.
4. Approval of the Engineer is required for deviation.

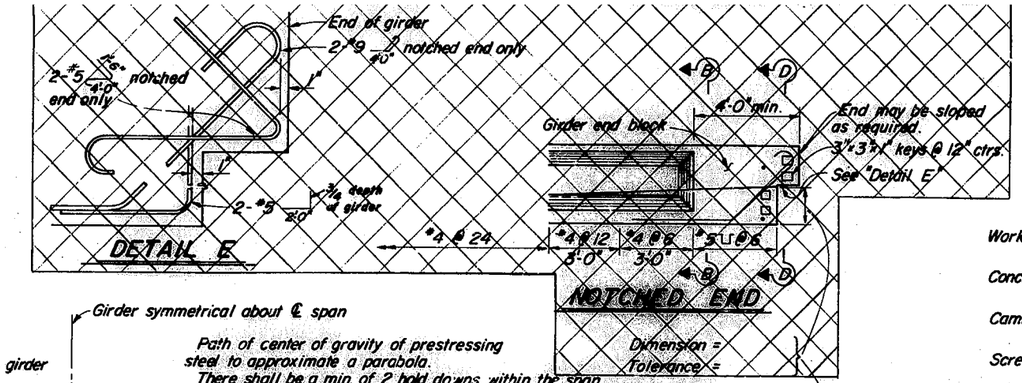

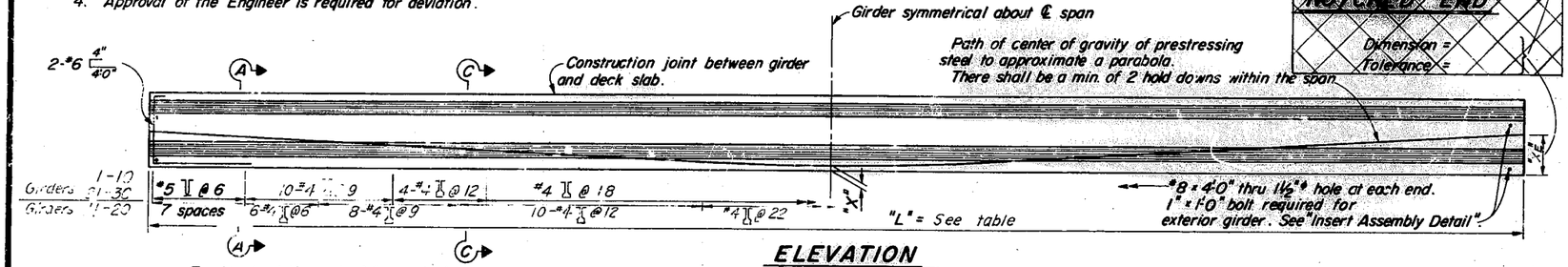

ELEVATION

PRESTRESSING NOTES

Working Force: The force required at center of span after all losses.

Concrete Strength: f'_{ci} is at time of initial stressing, f'_c is at 28 days, psi.

Camber: Girder soffit is to be cast parabolic with value shown as ordinate at ℄ span.

Screed line elevations for deck concrete will be determined by the Engineer.

Contractor may interpolate "P" and "X" values between limits shown, as approved by the Engineer.

Girder location or designation and length	P = Working force in Kips. "X"		"XE"	Concrete Strength f'_{ci}	f'_c	Deflection at ℄ Span due to CIP Slab	Girder Camber at ℄ Span
1 10 21 30 (L=37'-7 9/16)	5'-4"	285	10 3/8	3500 psi	4200 psi	0.150"	0"
11 20 (L=55'-1")	5'-2"	505	12 15/16	4200 psi	4200 psi	0.675"	0"

* 1. Additional strands to be located 6" from bottom.
2. May use regular prestressing strands of the girder if they are located within the bottom one foot of the girder.

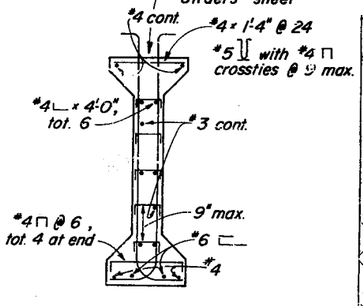

SECTION A-A

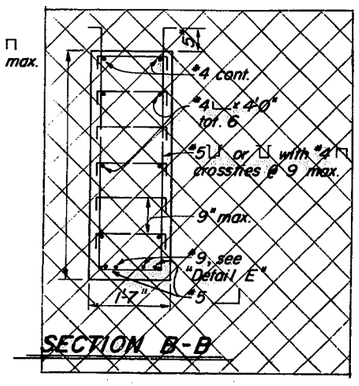

SECTION B-B

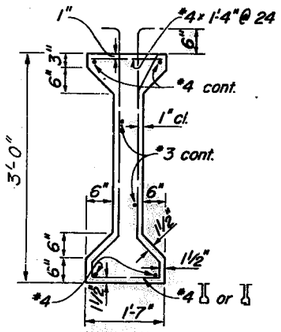

SECTION C-C

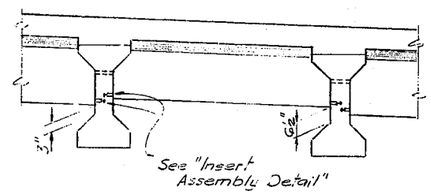

INTERMEDIATE DIAPHRAGM
(At Utility Opening)

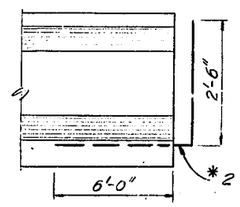

DETAIL E

* 2 Additional strands

NO CORRECTIONS
AS BUILT
RESIDENT ENGINEER — DATE

NOTE:
Details shown are for Pretensioned Girders. The Contractor may submit details for Post tensioning which shall be subject to the approval of the Engineer.

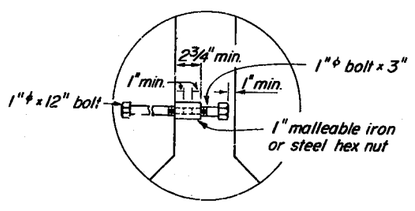

INSERT ASSEMBLY DETAIL

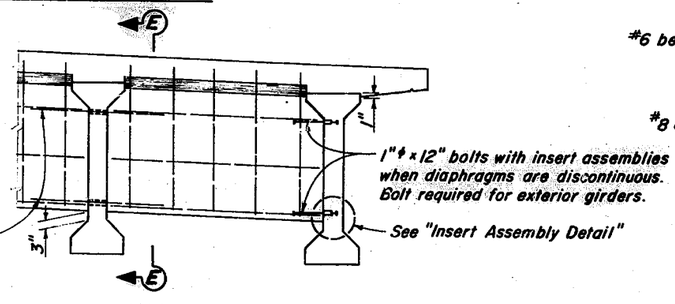

INTERMEDIATE DIAPHRAGM
(Except At Utility Opening)

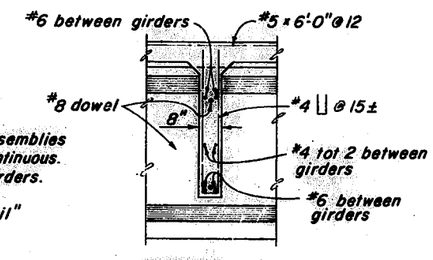

SECTION E-E

Changes and additions to this sheet by De Leuw, Cather and Company Engineers, San Francisco, Cal. Aug 77

STANDARD DRAWING

FILE No. XS-12-36	DESIGN	By: L. N. Bauman	Checked	
DRAWING DATE 12/76	DETAILS	By: K.C. Blechinger	Checked	
	SUBMITTED BY			

Approval Recommended By — REGISTERED CIVIL ENGINEER NUMBER 7383

HBD D 147

State of CALIFORNIA — DEPARTMENT OF TRANSPORTATION

STRUCTURES-DESIGN

BRIDGE No. — POST MILE

COUNTY OF SAN BERNADINO

BEAR VALLEY CUTOFF

PRESTRESSED I GIRDER

ORIGINAL SCALE IN INCHES FOR REDUCED PLANS 0 1 2 3

GU WO

Disregard prints bearing earlier revision dates

REVISION DATES (FOR DEPARTMENT USE ONLY)

SHEET 22 OF 23

REDUCED PLAN
0 1 2 3
3 INCHES ON ORIGINAL PLAN

173–178
FILE NO. 158700 AB

MARK	REVISIONS	APPR.	DATE

DE LEUW, CATHER & COMPANY
CONSULTING ENGINEERS
SAN FRANCISCO, CALIFORNIA

Aug. 77

REGISTERED PROFESSIONAL ENGINEER HARRY CHIN No. 22922 CIVIL STATE OF CALIFORNIA

COUNTY OF SAN BERNARDINO
TRANSPORTATION DEPARTMENT

HESPERIA AREA

BEAR VALLEY CUTOFF

APATITE STREET TO TAMARISK AVENUE

SLOPE PAVING DETAILS

W.O. NO. H06347 | FIELD BOOK REF.

SUBMITTED BY: PROJECT ENGINEER — DATE 1/5/78
RECOMMENDED/APPROVED BY: ASST. ROAD COMM.—PLANNING & ENGR. — DATE
APPROVED BY: DIR. DIVISION OF TRANSPORTATION — DATE 1/12/78
DIRECTOR OF TRANSPORTATION — DATE 1-18-78

FILE NO. 173-178
158700 AB

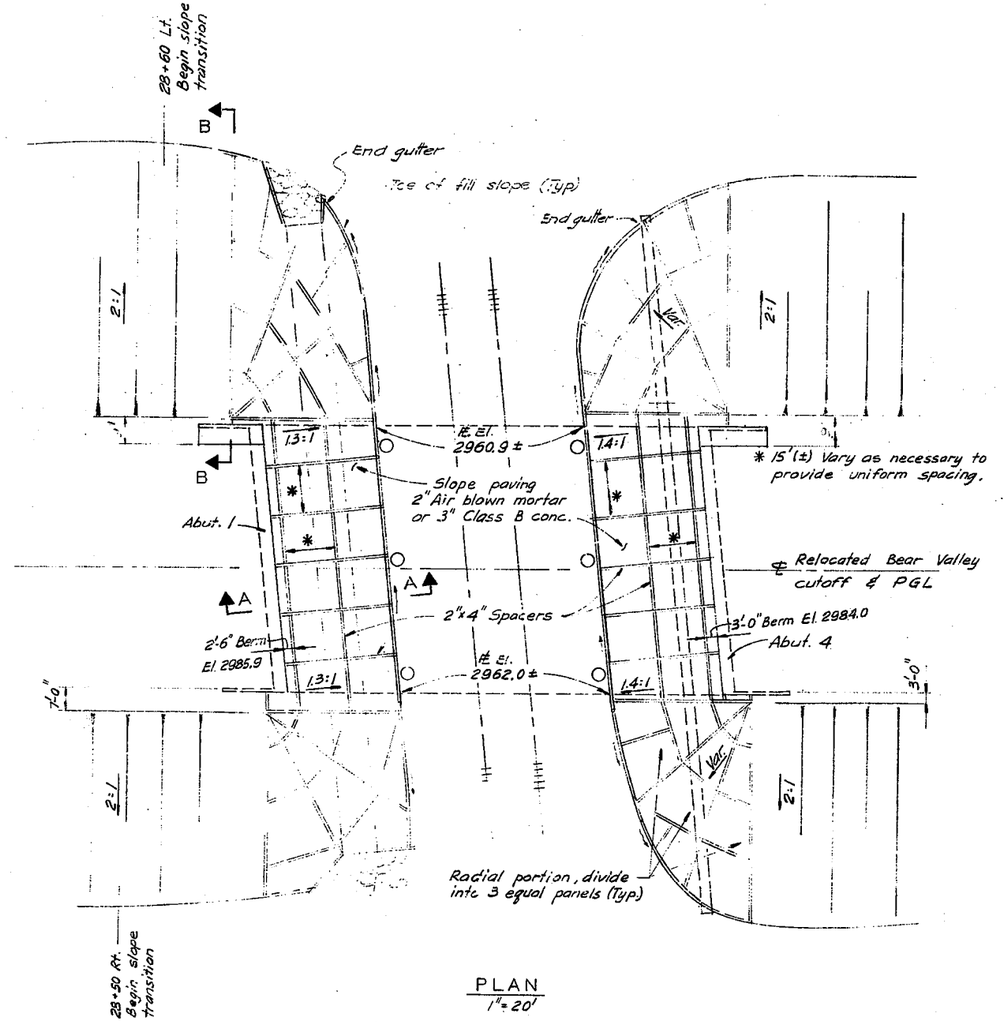

PLAN
1" = 20'

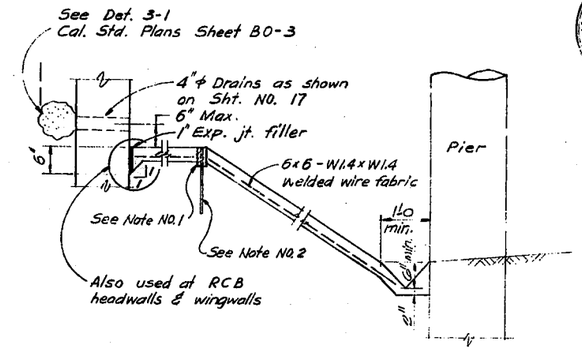

SECTION A-A
No scale

Notes:

1. For spacers use 2"x4" redwood on 15'(±) centers in both directions.
2. Place #4x18" reinf. steel bars @ 6'(±) intervals through all 2"x4" spacers.

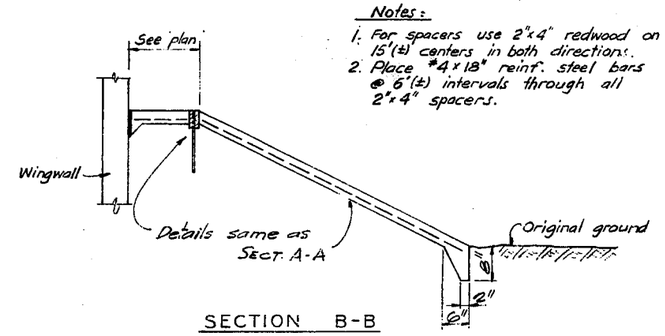

SECTION B-B
No scale

APPROXIMATE QUANTITIES

DESCRIPTION	QUANTITY
FURNISH PRESTRESSED "I" GIRDERS	
38 FEET	20 EA.
55 FEET	10 EA.
ERECT PRESTRESSED "I" GIRDERS	
38 FEET	20 EA.
55 FEET	10 EA.
WATERSTOPS	150 L.F.
JOINT SEAL, TYPE (B)	155 L.F.
RESTRAINER UNIT (TYPE 2)	16 UNITS
CHAIN LINK RAILING (TYPE 7)	317 L.F.
CONCRETE BARRIER (TYPE 25)	160 L.F.
CONCRETE BARRIER (TYPE 26)	160 L.F.

FINAL PAY QUANTITIES

DESCRIPTION	QUANTITY
STRUCTURE EXCAVATION	930 C.Y.
STRUCTURE BACKFILL	650 C.Y.
STRUCTURE CONCRETE, BRIDGE FOOTING	180 C.Y.
STRUCTURE CONCRETE, BRIDGE	760 C.Y.
SLOPE PAVING	225 C.Y.
BAR REINFORCING STEEL	147,200 LBS.
SUPPLEMENTAL REINFORCING (STRANDS)	1,000 LBS.

LIST OF STANDARD PLANS

State of California, Business and Transportation Agency, Department of Transportation, Standard Plans - March 1977, Edition.

A62-B8	B7-10
B0-3	B11-53
B0-5	B11-54
B6-21	

NO CORRECTIONS
AS BUILT
RESIDENT ENGINEER — DATE

DESIGNED BY	DRAWN BY	CHECKED BY
H. Chin	E. Loh	R. Peterson

FILE NO. 173-178
158700 AB

REDUCED PLAN
0 1 2 3
3 INCHES ON ORIGINAL PLAN

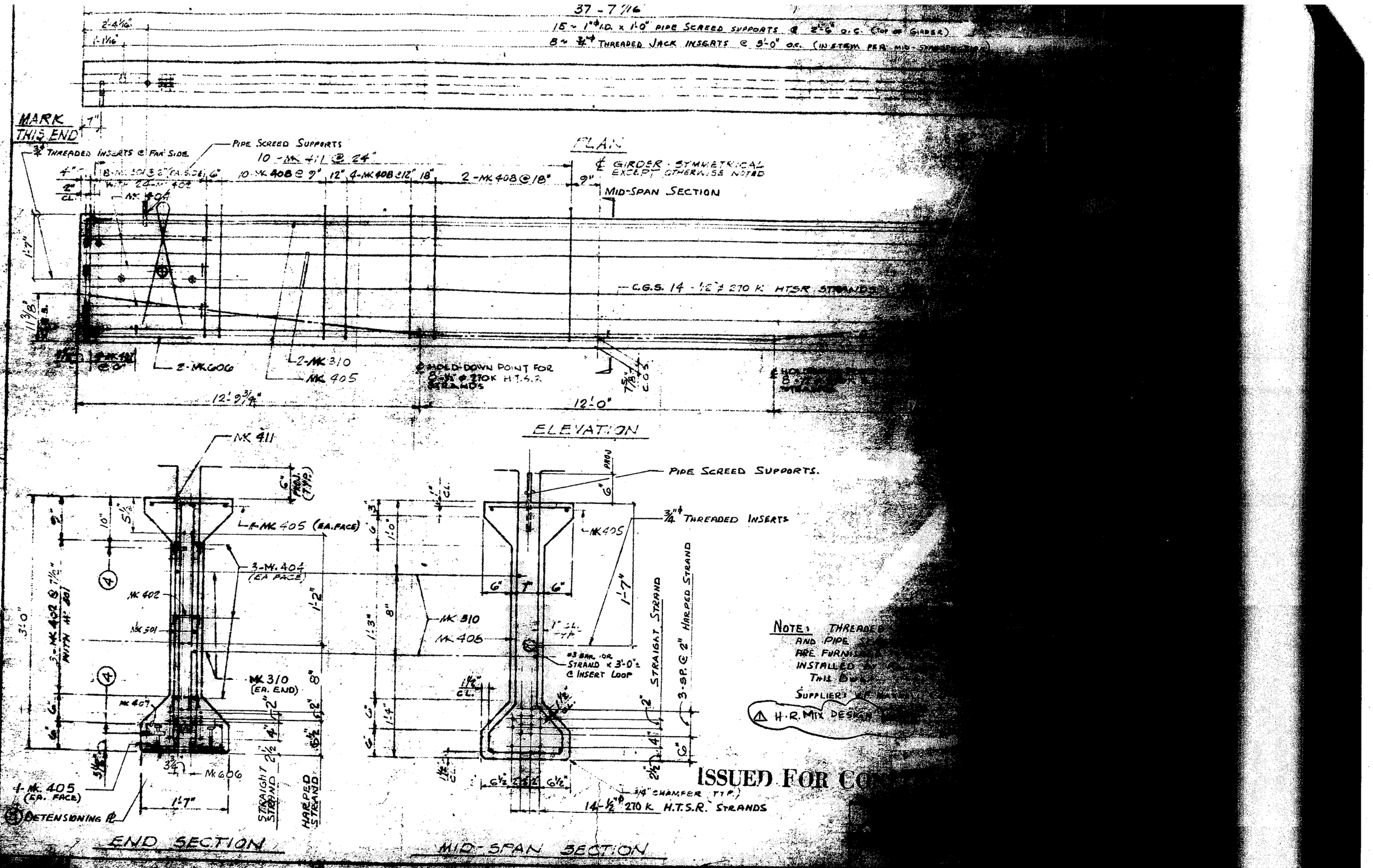
37 - 7 1/16
15 ~ 1" ϕ I.D. x 1'-0" PIPE SCREED SUPPORTS @ 2'-6" O.C. (TOP OF GIRDER)
8 ~ 3/4" ϕ THREADED JACK INSERTS @ 3'-0" O.C. (IN STEM PER MID-SPAN SECTION)
MARK THIS END
3/4" ϕ THREADED INSERTS @ FAR SIDE
PIPE SCREED SUPPORTS
10 - MK 411 @ 24"
10 - MK 408 @ 9"
12" 4 - MK 408 @ 12"
18"
2 - MK 408 @ 18"
PLAN
℄ GIRDER - SYMMETRICAL EXCEPT OTHERWISE NOTED
MID-SPAN SECTION
C.G.S. 14 - 1/2" ϕ 270 K HTSR STRANDS
2 - MK 606
2 - MK 310
MK 405
HOLD-DOWN POINT FOR 2 - 1/2" ϕ 270K H.T.S.R. STRANDS
12'-9 31/32"
12'-0"
ELEVATION
MK 411
1 - MK 405 (EA. FACE)
3 - MK. 404 (EA FACE)
MK 402
MK 501
MK 310 (EA. END)
MK 407
MK 606
1 - MK. 405 (EA. FACE)
DETENSIONING ℄
1'-7"
STRAIGHT STRAND
HARPED STRAND
END SECTION
PIPE SCREED SUPPORTS.
3/4" ϕ THREADED INSERTS
MK 405
MK 310
MK 405
#3 BAR 10" STRAND x 3'-0" ± @ INSERT LOOP
STRAIGHT STRAND
HARPED STRAND
3 - SP. @ 2"
14 - 1/2" ϕ 270 K H.T.S.R. STRANDS
3/4" CHAMFER (TYP.)
MID-SPAN SECTION
NOTE: THREADED AND PIPE ARE FURNISHED INSTALLED BY THIS BIDDER
SUPPLIER'S
H.R. MIX DESIGN
ISSUED FOR CO
CONCRETE CORP.
CALIF. 213 821-3561
PRESTRESSED I-GIRDER : G-1

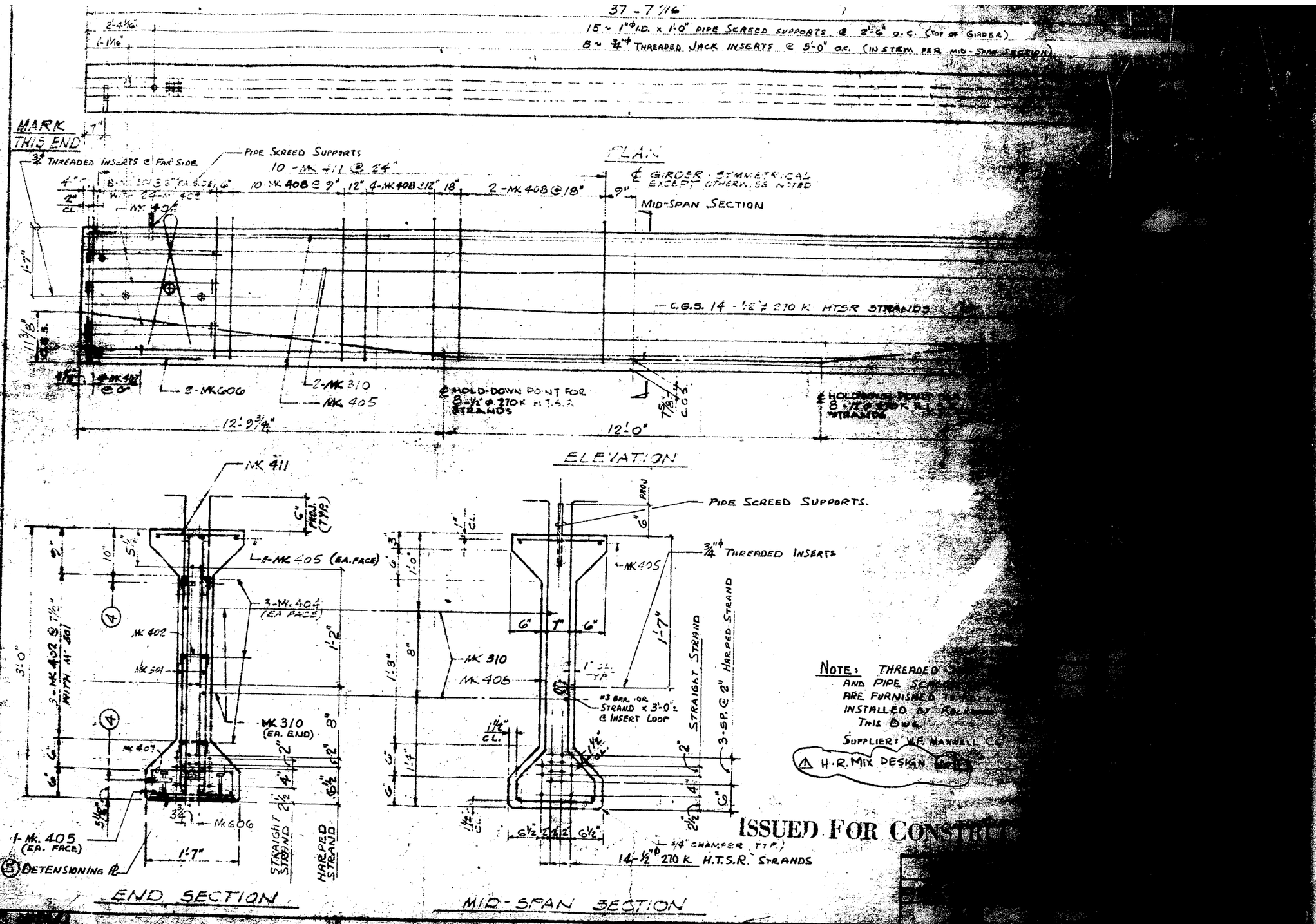

NOTE: THREADED [illegible] AND PIPE SCREED [illegible] ARE FURNISHED [illegible] INSTALLED BY [illegible] THIS DWG.
SUPPLIER: W.F. MAXWELL CO.

⚠ H.R. MIX DESIGN [illegible]

ISSUED FOR CONSTRUCTION

[illegible] SECTION PLAN SEE DWG. G-1
[illegible] AGGREGATE & HARDROCK
[illegible] = 3500
[illegible] = 4000
[illegible] 4.18
[illegible] 847
JACKING FORCE 289

ROCKWIN PRESTRESSED CONCRETE CORP.
[illegible] E. INDUSTRIAL HWY. - SANTA FE SPRINGS, CALIF. 213/921-3561

PRESTRESSED I-GIRDER : G-1
2-PAGE

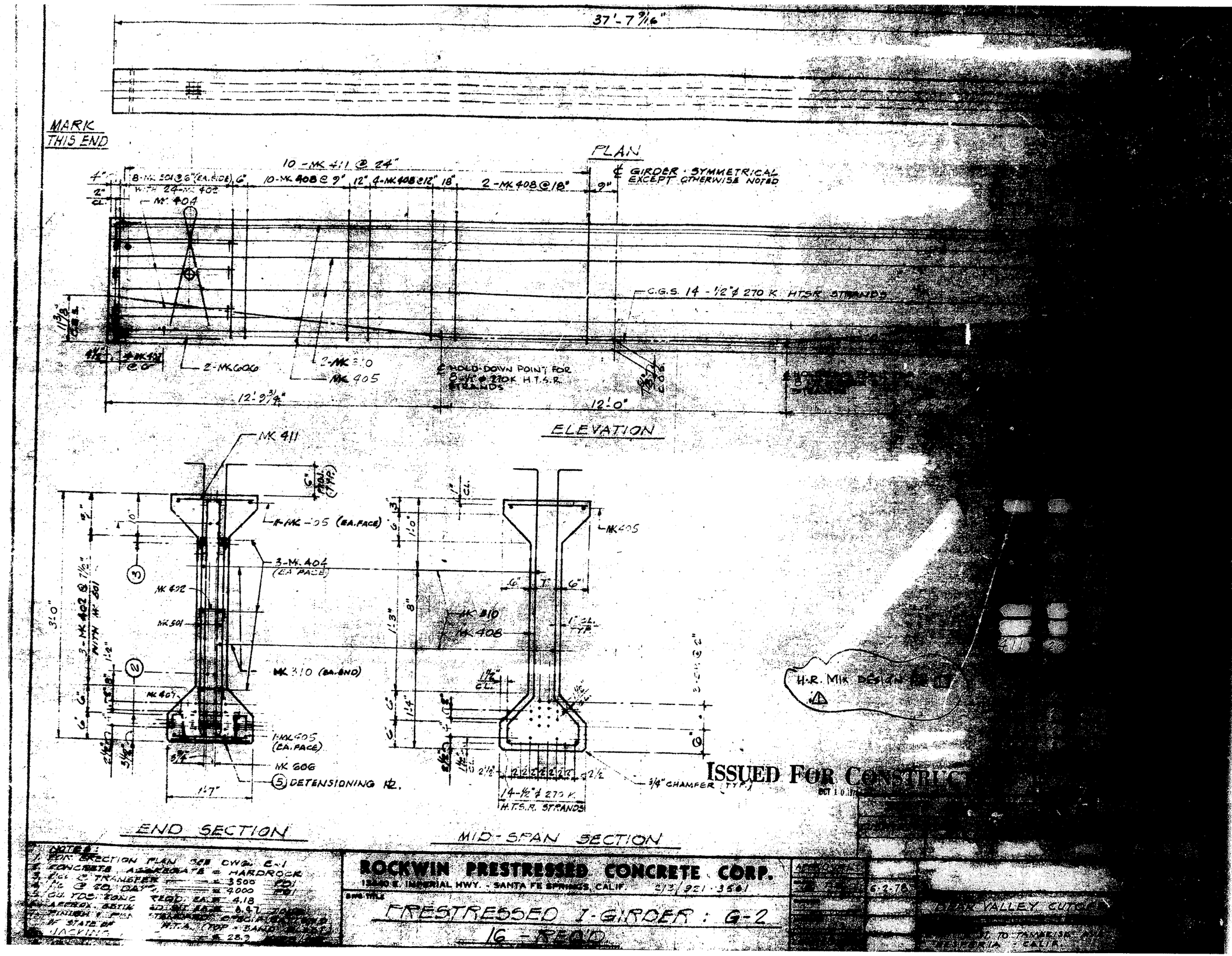
37'-7 9/16"
MARK THIS END
PLAN
℄ GIRDER - SYMMETRICAL EXCEPT OTHERWISE NOTED
10 - MK 411 @ 24"
8-MK 501 @ 6" (EA. FACE)
W/ 24-MK 402
10-MK 408 @ 9"
4-MK 408 @ 12"
2-MK 408 @ 18"
MK 404
C.G.S. 14 - 1/2"ϕ 270 K HTSR STRANDS
2-MK 606
MK 405
℄ HOLD-DOWN POINT FOR 8-1/2"ϕ 270K H.T.S.R. STRANDS
12'-9 3/4"
12'-0"
ELEVATION
MK 411
4-MK 405 (EA. FACE)
3-MK 404 (EA FACE)
MK 402
MK 501
MK 310 (EA. END)
MK 404
1-MK 605 (EA. FACE)
MK 606
DETENSIONING HD.
1'-7"
MK 405
MK 310
MK 408
14-1/2"ϕ 270 K. H.T.S.R. STRANDS
3/4" CHAMFER (TYP.)
END SECTION
MID-SPAN SECTION
H.R. MIK DESIGN
ISSUED FOR CONSTRUCTION
OCT 10 1978
NOTES:
1. FOR ERECTION PLAN SEE DWG. E-1
2. CONCRETE AGGREGATE = HARDROCK
3. f'ci @ TRANSFER = 3500 PSI
4. f'c @ 28 DAYS = 4000 PSI
5. CU. YDS. CONC. REQ. EA. = 4.18
6. APPROX. BRIDGE WT. EA. = 6.47 TONS
7. FINISH & PAINT TEMPORARY CHECK PER
8. IF STATE OF HIGHWAY (TOP - SAND
JACKING = 28.3
ROCKWIN PRESTRESSED CONCRETE CORP.
12200 E. IMPERIAL HWY. - SANTA FE SPRINGS, CALIF. 213/921-3661
PRESTRESSED I-GIRDER : G-2
16 - READ
6-2-78
VALLEY CUTOFF
TO TAMARISK AVE.
FEDERIA - CALIF.

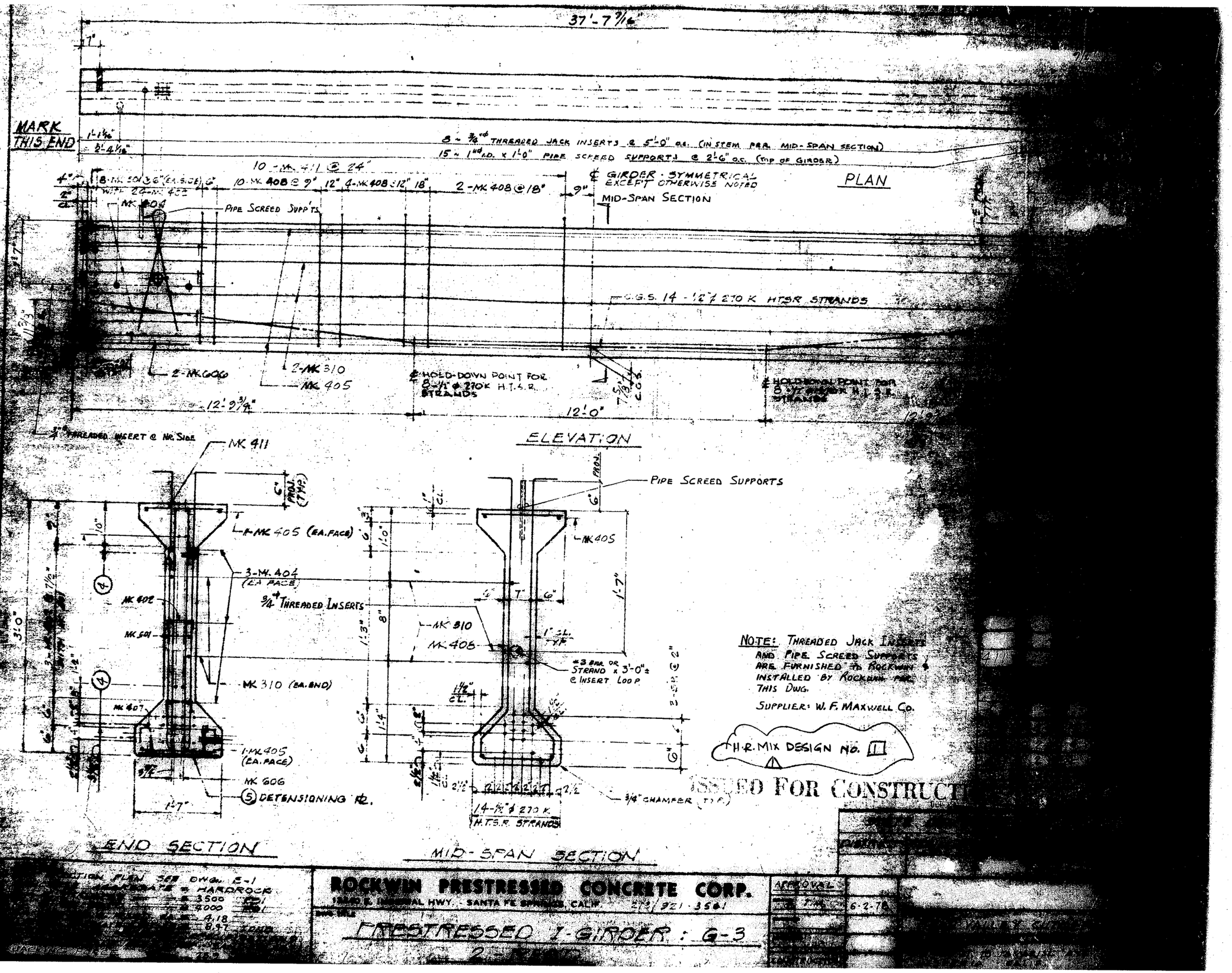
37'-7 9/16"
MARK THIS END
1'-1 1/16"
2'-4 1/16"
8 - 3/4"φ THREADED JACK INSERTS @ 5'-0" o.c. (IN STEM PER MID-SPAN SECTION)
15 - 1" I.D. x 1'-0" PIPE SCREED SUPPORTS @ 2'-6" o.c. (TOP OF GIRDER)
10 - MK 411 @ 24"
8 - MK 501 @ 6" (EA. SIDE) @ 6" WITH 24 - MK 402
10 - MK 408 @ 9"
12" 4 - MK 408 @ 12"
18"
2 - MK 408 @ 18"
9"
℄ GIRDER - SYMMETRICAL EXCEPT OTHERWISE NOTED
PLAN
MID-SPAN SECTION
MK 404
PIPE SCREED SUPP'TS
C.G.S. 14 - 1/2" ϕ 270 K HTSR STRANDS
2 - MK 606
2 - MK 310
MK 405
℄ HOLD-DOWN POINT FOR 8 - 1/2" ϕ 270K H.T.S.R. STRANDS
12'-9 3/4"
12'-0"
ELEVATION
3/4" THREADED INSERT @ NR. SIDE
MK 411
6" PROJ. (TYP.)
4 - MK 405 (EA. FACE)
3 - MK 404 (EA. FACE)
3/4" THREADED INSERTS
MK 402
MK 501
MK 310 (EA. END)
MK 407
1 - MK 405 (EA. FACE)
MK 606
5 DETENSIONING PL.
1'-7"
3'-0"
END SECTION
PIPE SCREED SUPPORTS
MK 405
MK 310
MK 408
#3 BAR OR STRAND x 3'-0"± @ INSERT LOOP
14 - 1/2" ϕ 270 K. H.T.S.R. STRANDS
3/4" CHAMFER (TYP.)
1'-7"
MID-SPAN SECTION
NOTE: THREADED JACK INSERTS AND PIPE SCREED SUPPORTS ARE FURNISHED BY ROCKWIN & INSTALLED BY ROCKWIN PER THIS DWG.
SUPPLIER: W. F. MAXWELL CO.
H.R. MIX DESIGN NO. 11
ISSUED FOR CONSTRUCTION
ROCKWIN PRESTRESSED CONCRETE CORP.
1540 E. IMPERIAL HWY. SANTA FE SPRINGS, CALIF. 213/921-3561
PRESTRESSED I-GIRDER : G-3
APPROVAL
6-2-78

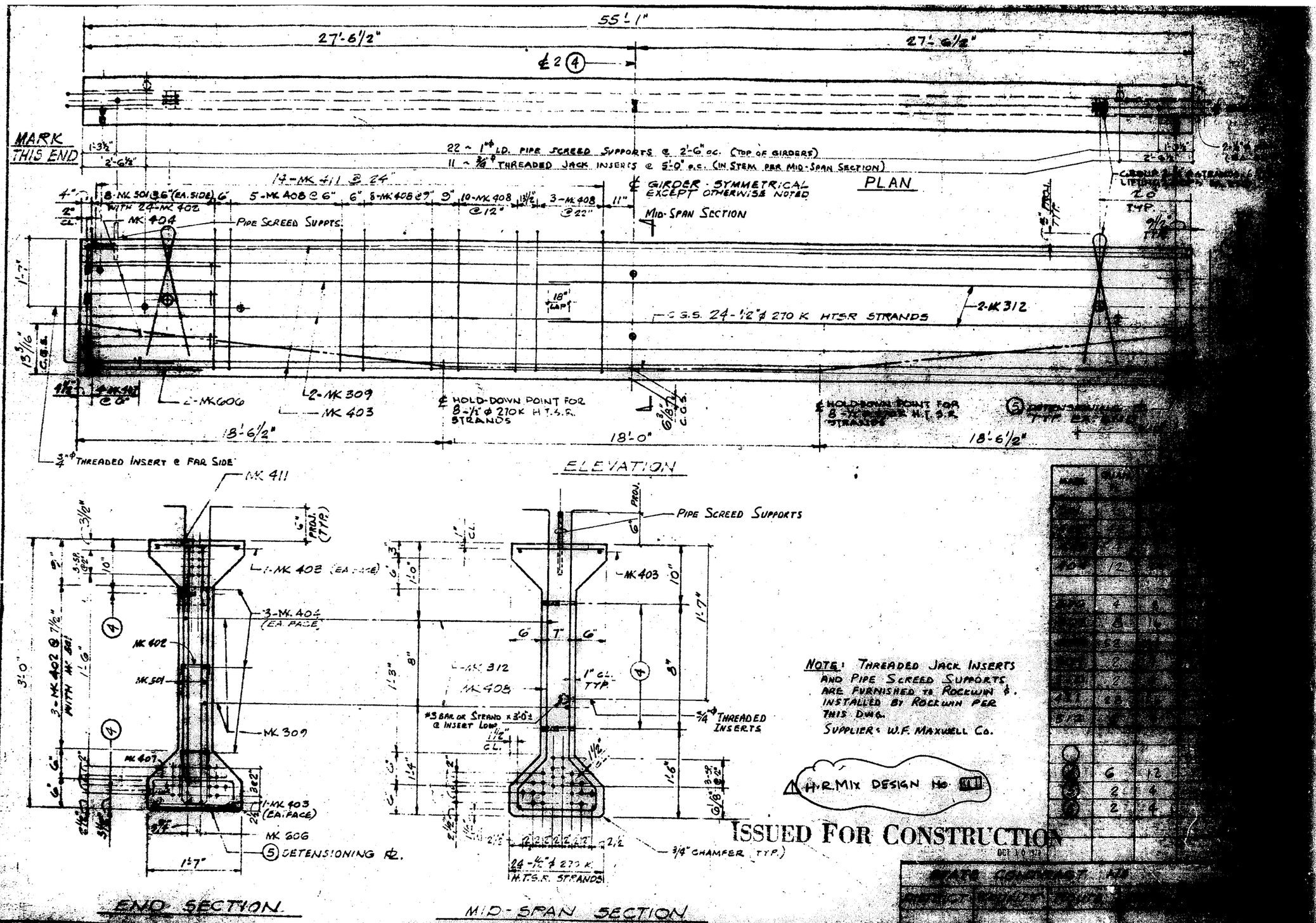

NOTE: THREADED JACK INSERTS AND PIPE SCREED SUPPORTS ARE FURNISHED TO ROCKWIN & INSTALLED BY ROCKWIN PER THIS DWG.
SUPPLIER: W.F. MAXWELL CO.

H.R. MIX DESIGN NO. [illegible]

ISSUED FOR CONSTRUCTION

MARK	QUAN.	
	12	
	4	4
	8	16
	52	
	2	
	12	
	52	
	6	12
	2	4
	2	4

STATE CONTRACT NO.

DWG. E-1
HARDROCK
4200
4200
6-12
12-24

ROCKWIN PRESTRESSED CONCRETE CORP.
12440 E. IMPERIAL HWY. - SANTA FE SPRINGS, CALIF. 213/921-3801

DWG TITLE
PRESTRESSED I-GIRDER: G-4
2-SPAN

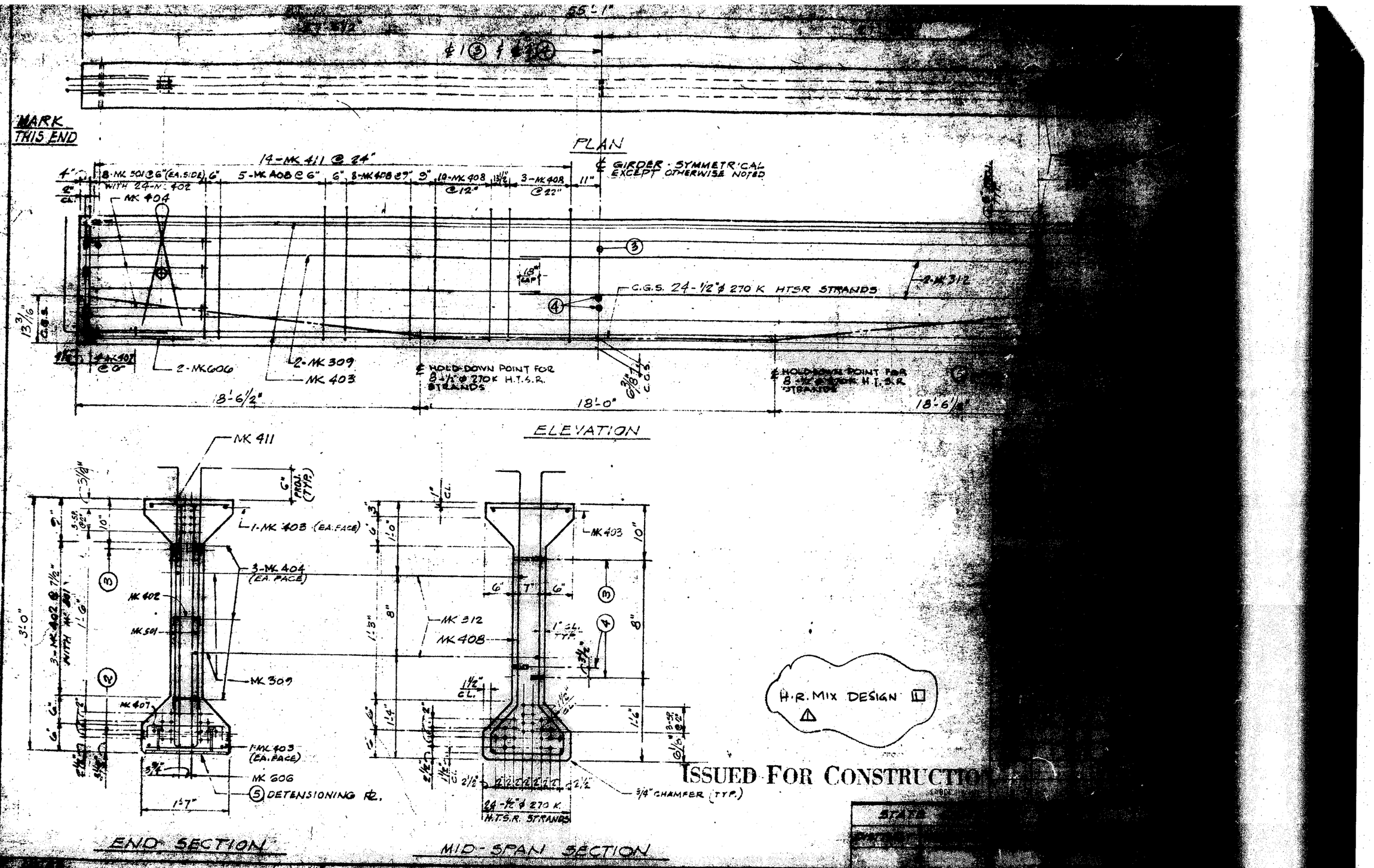
MARK THIS END
PLAN
℄ GIRDER - SYMMETRICAL EXCEPT OTHERWISE NOTED
14-MK 411 @ 24"
8-MK 501 @ 6" (EA. SIDE) WITH 24-MK 402
5-MK 408 @ 6"
8-MK 408 @ 9"
10-MK 408 @ 12"
3-MK 408 @ 22"
MK 404
C.G.S. 24-1/2"ϕ 270 K HTSR STRANDS
2-MK 312
2-MK 606
2-MK 309
MK 403
℄ HOLD-DOWN POINT FOR 8-1/2"ϕ 270K H.T.S.R. STRANDS
18'-6 1/2"
18'-0"
18'-6 1/2"
ELEVATION
MK 411
1-MK 403 (EA. FACE)
3-MK 404 (EA. FACE)
MK 402
MK 501
MK 309
MK 407
1-MK 403 (EA. FACE)
MK 606
5 DETENSIONING PL.
3'-0"
1'-7"
MK 403
MK 312
MK 408
24-1/2"ϕ 270 K H.T.S.R. STRANDS
3/4" CHAMFER (TYP.)
END SECTION
MID-SPAN SECTION
H.R. MIX DESIGN
ISSUED FOR CONSTRUCTION
ROCKWIN PRESTRESSED CONCRETE CORP.
PRESTRESSED I GIRDER : G-5

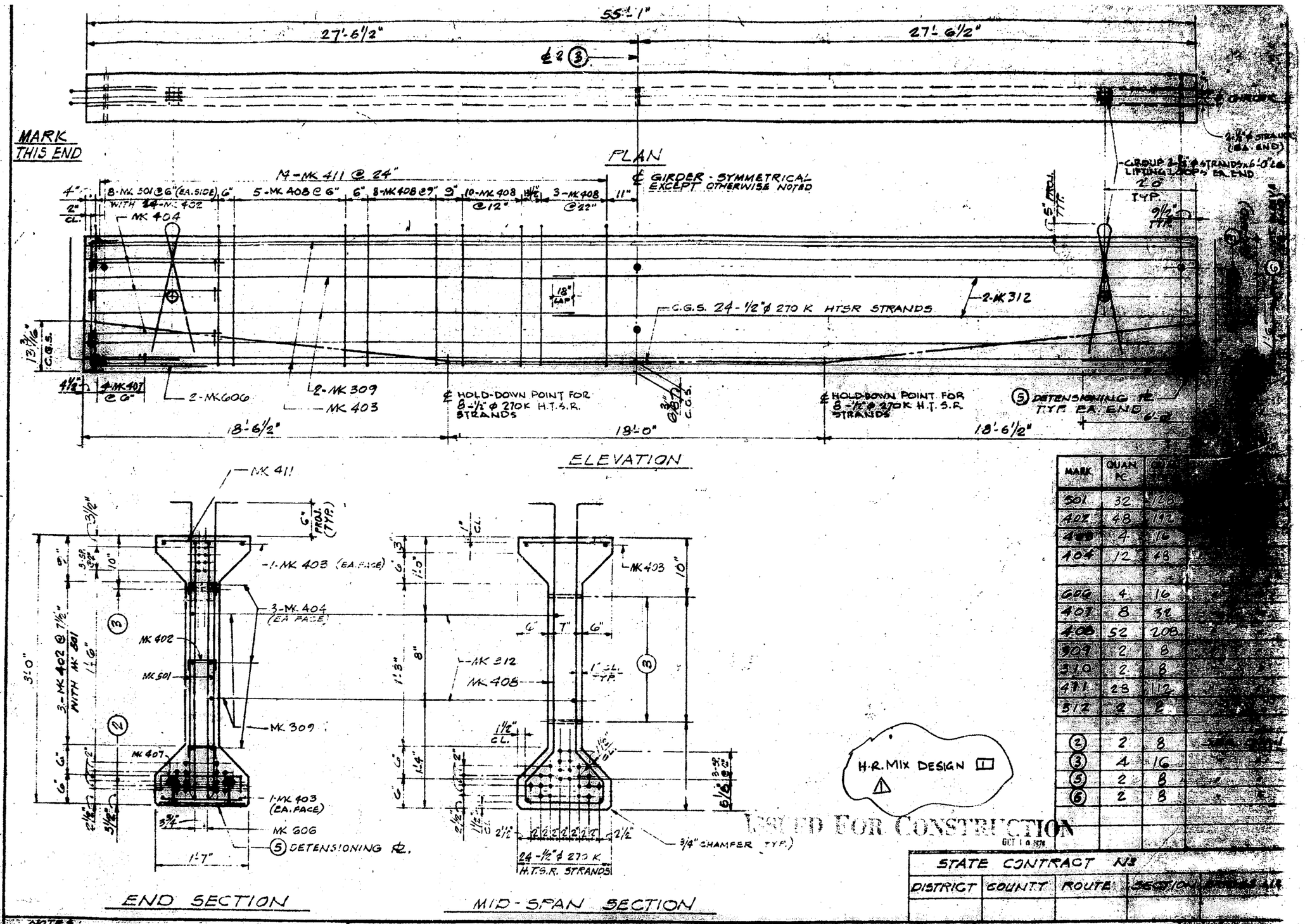

MARK	QUAN PC	
501	32	128
402	48	112
408	4	16
404	12	48
606	4	16
407	8	32
408	52	208
309	2	8
310	2	8
411	28	112
312	2	8
(2)	2	8
(3)	4	16
(5)	2	8
(6)	2	8

STATE CONTRACT NO.

DISTRICT	COUNTY	ROUTE	SECTION

NOTES:
1. FOR ERECTION PLAN SEE DWG. E-1
2. CONCRETE AGGREGATE = HARDROCK
3. f'ci @ TRANSFER = 4200 PSI
4. f'c @ 28 DAYS = 4200 PSI
5. CU. YDS. CONC. REQD. EA. = 6.12
6. STEEL ESTIMATED WT. EA. = 12.39 TONS
7. DESIGN & FOR STANDARD SPECIFICATIONS OF STATE OF CALIF. H.T.A. (TOP - SAND PLANT)
JACKING FORCE = 28.9

ROCKWIN PRESTRESSED CONCRETE CORP.
13440 E. IMPERIAL HWY. - SANTA FE SPRINGS, CALIF. 213/921-3561

DWG TITLE
PRESTRESSED I-GIRDER : G-6
4 - REQ'D.

APPROVAL
T.M. 6-2-78
CONSTRUCTION

PROJECT 7823
BEAR VALLEY CUTOFF
MAIN ST. TO TAMARISK AVE.
HESPERIA - CALIF.

G-6

APPENDIX E

APPENDIX E

CALCULATIONS

FOR

BEAR VALLEY ROAD OVERHEAD AT BNSF RAILROAD
VICTORVILLE, CALIFORNIA

City of Victorville
Street Design Standards

Street Classification	Right of Way Width (Feet)	Design Speed (mph)	Centerline Radius (ft., minimum)	Grade (percent, maximum)	Traffic Index (minimum)	Pavement Section Equivalent (AC/base, in., min.)
Local	**60**	**30**	**300**	**10%**	**6**	**3" / 8"**
Collector	**64**	**40**	**600**	**7%**	**8**	**3.5" / 8"**
Arterial	**84**	**50**		**7%**	**10**	**5.5" / 8"**
Major Arterial	**100**	**55**			**11**	**6" / 10"**
Super Arterial	**124**	**65**			**12 ***	**7" / 10"**

Notes:

1. Required right of way width may be increased for special requirements as determined by the City Engineer.
2. Minimum centerline radius for all streets shall comply with the Highway Design Manual.
3. Centerline radius may have to be increased to meet minimum sight distance standards.
4. Traffic index for Bear Valley Rd is 13.
5. Proposed TI's assume an R-value no greater than 50. Pavement section design is determined by TI and R-value.

Curb Return Radius (feet)					
Street Classification	**Local**	**Collector**	**Arterial**	**Major Arterial**	**Super Arterial**
Local	**20**				
Collector	**25**	**25**			
Arterial	**30**	**30**	**35**		
Major Arterial	**30**	**30**	**35**	**40**	
Super Arterial	**35**	**40**	**50**	**50**	**50**

Notes:

1. Caltrans requires a 50 ft. radius for street connections to State Routes

last rev. 6/20/06

CALFP Ver. 1.1

Unit System = E

Title: Bear Valley overhead at BNSF
Traffic Index (TI) = 13.0
R.Value of Subgrade (Native Soil) = 50
Required GE = 0002.08 ft

Base Type = AB-Class 2

Base Gravel Factor = 0001.10
Base R.Value = 0078.00
0.0032*TI*(100-R.VALUE) = 0000.92 ft
Base MAX. depth = 0002.00 ft
Base MIN. depth = 0000.35 ft

Depth (ft)	GF (ft)	GE (ft)	Depth (ft)	GF (ft)	GE (ft)
00.10	01.57	00.16	00.15	01.57	00.24
00.20	01.57	00.31	00.25	01.57	00.39
00.30	01.57	00.47	00.35	01.57	00.55
00.40	01.57	00.63	00.45	01.57	00.71
00.50	01.57	00.79	00.55	01.59	00.87
00.60	01.64	00.98	00.65	01.68	01.09
00.70	01.72	01.20	00.75	01.76	01.32
00.80	01.80	01.44	00.85	01.84	01.56
00.90	01.87	01.68	00.95	01.91	01.81
01.00	01.94	01.94	01.05	01.97	02.07
01.10	02.00	02.20	01.15	02.03	02.33
01.20	02.06	02.47	01.25	02.09	02.61
01.30	02.12	02.76	01.35	02.15	02.90
01.40	02.17	03.04	01.45	02.20	03.19
01.50	02.22	03.33	01.55	02.25	03.49
01.60	02.27	03.63	01.65	02.29	03.78
01.70	02.32	03.94	01.75	02.34	04.10
01.80	02.36	04.25	01.85	02.38	04.40

HMA Safety Factor (GE) = 0000.20 ft
HMA Ultimate Depth = 0001.85 ft
(HMA MAX. Depth shown in Table)

HMA MIN. Depth (from Base) = 0000.20 ft

HMA MIN. Depth (selected) = 0000.20 ft

Note: Positive Residual GE indicates over-design.
Note: Negative Safety Factor in Base

HMA ft	TPB ft	T-Base ft	B-Base ft	Subbase ft	Res-GE ft	Cost $/y^2	HMA-GF ft	ft
00.65	00.00	00.90	00.00	00.00	00.00	0000.00	01.68	
00.70	00.00	00.80	00.00	00.00	00.00	0000.00	01.72	
00.75	00.00	00.70	00.00	00.00	00.01	0000.00	01.76	
00.80	00.00	00.60	00.00	00.00	00.02	0000.00	01.80	
00.85	00.00	00.45	00.00	00.00	-00.02	0000.00	01.84	
00.90	00.00	00.35	00.00	00.00	-00.01	0000.00	01.87	
00.95	00.00	00.35	00.00	00.00	00.12	0000.00	01.91	
01.00	00.00	00.35	00.00	00.00	00.25	0000.00	01.94	
01.05	00.00	00.35	00.00	00.00	00.37	0000.00	01.97	
01.10	00.00	00.35	00.00	00.00	00.51	0000.00	02.00	

***** FINISH *****

PROJECT NAME Bear Valley @ BNSF

PROJECT NO A9072-06-01
BY JMT DATE Feb 2015
SHEET 1 OF

Ref: alternative Procedure to Estimate Flexible Pavement Rehabilitation Requirements for Project Scoping - Nov 2006

mill & overlay

$T = 13$
Design Life = 20 yr, assumed
$\rho = 80\%$
From Table 2, basic overlay thickness = 0.5'

$y_1 = 0.5'$

$y_3 = 0$ = no change to roadway profile

$$G_f^* = \frac{G_{f_1} \times h_1 + G_{f_2} \times h_2}{h_1 + h_2} = \frac{1.1 \times 0.8 + 1.4 \times 0.4}{0.8 + 0.4} = 1.346$$

$$y_2 = \frac{y_1 - y_3}{1 - \frac{G_f^*}{1.9}} = \frac{0.5 - 0}{1 - \frac{G_f^*}{1.9}} = 1.7 > 0.8 + 0.4$$

mill depth > existing paving thickness
∴ mill & overlay w/ zero change to roadway profile not feasible

Let $y_3 = 0.3$

$$y_2 = \frac{0.5 - 0.3}{1 - \frac{1.346}{1.9}} = 0.68'$$

$0.68 - 0.5' \cong 0.2$

∴ mill 0.2', place 0.68' overlay

REVISIONS
BY ____ DATE ____
BY ____ DATE ____

BY ____ DATE ____
CHECKED BY ____

GEOCON INCORPORATED

Bear Valley – Foundation Report (FR 020817)

Project No. A9072-06-01
February 8, 2017

VIA ELECTRONIC MAIL

Mr. Juann Ramos, PE
Dokken Engineering
110 Blue Ravine Road, Suite 200
Folsom, California 95630

Subject: FOUNDATION REPORT
BEAR VALLEY ROAD OVERHEAD AT BNSF RAILROAD
BRIDGE REHABILITATION AND WIDENING
VICTORVILLE, CALIFORNIA

Dear Mr. Ramos:

In accordance with your authorization, we herein submit our Foundation Report (FR) for the proposed rehabilitation and widening of Bear Valley Road at the Burlington Northern Santa Fe (BNSF) Railroad crossing in the City of Victorville, California. The accompanying report presents the findings and conclusions from our study.

Please contact us if you have any questions regarding this FR or if we may be of further service.

Sincerely,

GEOCON WEST, INC.

REGISTERED PROFESSIONAL ENGINEER
JELISA M. THOMAS
74946
CIVIL
STATE OF CALIFORNIA

Jelisa Thomas Adams
PE 74946

PROFESSIONAL GEOLOGIST
GERALD KASMAN
NO. 2251
CERTIFIED ENGINEERING GEOLOGIST
STATE OF CALIFORNIA

Gerald A. Kasman
CEG 2251

TABLE OF CONTENTS

FOUNDATION REPORT PAGE

1. INTRODUCTION AND PROJECT DESCRIPTION 1
2. SCOPE OF SERVICES 1
3. EXCEPTION TO POLICY 2
4. FIELD INVESTIGATION AND TESTING PROGRAM 2
5. LABORATORY TESTING PROGRAM 3
6. SITE GEOLOGY AND SUBSURFACE CONDITIONS 4
   6.1 Topography and Geology 4
   6.2 Types of Soil and Rock 4
      6.2.1 Previously Placed Fill 4
      6.2.2 Alluvium (Qvof) 5
   6.3 Pertinent Soil Conditions or Geologic Hazards 5
      6.3.1 Landslides 5
      6.3.2 Embankment Failures 5
      6.3.3 Ground Subsidence 5
      6.3.4 Expansive Soils 5
      6.3.5 Collapsible Soils 6
   6.4 Depth to Bedrock 6
   6.5 Groundwater 6
7. SCOUR EVALUATION 7
8. CORROSION EVALUATION 7
9. SEISMIC EVALUATION 7
   9.1 Ground Motion Evaluation 7
   9.2 Fault Rupture 9
   9.3 Liquefaction and Lateral Spreading 9
   9.4 Slope Stability 9
10. AS-BUILT DATA 9
11. FOUNDATION RECOMMENDATIONS 10
   11.1 Shallow Foundations 10
   11.2 Tieback Walls 16
12. GENERAL NOTES TO DESIGNER 18
13. CONSTRUCTION CONSIDERATIONS 18
14. DISCLAIMER AND CONTACT INFORMATION 19
15. CLOSURE 19
   15.1 Foundation and Grading Plan Review 19
   15.2 Limitations and Uniformity of Conditions 19
16. REFERENCES 20

CONTENTS (Continued)

FIGURES
Figure 1, Vicinity Map
Figure 2, Site Plan
Figure 3, Geologic Map
Figure 4, Recommended Design Response Spectrum

APPENDIX A
FIELD INVESTIGATION
Table A-1, Summary of Explorations
Figures A1 through A8, Boring Logs

APPENDIX B
LABORATORY TESTING
Figures B1 and B2, Direct Shear Test Results
Figures B3 through B9, Consolidation Test Results
Figure B10, Atterberg Limits
Figure B11 through B16, Grain Size Distribution
Figure B17, Laboratory Test Results
Figure B18 and B19, R-Value Test Results
Figure B20, Corrosivity Test Results

APPENDIX C
General Plan for *Bear Valley Road Overhead at BNSF Railroad*, March 14, 2012.

APPENDIX D
As-Built Plans for *Bear Valley Cutoff, Apatite Street to Tamarisk Avenue*, July 24, 1979.

APPENDIX E
ANALYSES AND CALCULATIONS

FOUNDATION REPORT

1. INTRODUCTION AND PROJECT DESCRIPTION

This Foundation Report (FR) presents the results of our geotechnical investigation for the proposed rehabilitation and widening of the Bear Valley Road Overhead at the Burlington Northern Santa Fe (BNSF) Railroad crossing in the City of Victorville, California. The approximate site coordinates are 34.471316° (latitude) and -117.279514° (longitude) WGS 84 Datum. The approximate site location is shown on the Vicinity Map, Figure 1.

The City of Victorville is proposing to widen the Bear Valley Road overhead at the BNSF Railroad crossing. The proposed project consists of rehabilitating, retrofitting, and widening the existing bridge which carries Bear Valley Road over the BNSF Railroad in order to meet current AASHTO safety standards and Super Arterial standard roadway configurations set forth by the City of Victorville.

The existing overhead structure is a three-span, precast and prestressed I-Girder bridge supported by two end abutments and two interior bents. The abutments are supported by continuous spread footings and the bents are supported by isolated spread footings. The bridge alignment extends approximately 133 linear feet, from approximate Station (Sta.) 28+92 to Sta. 30+25 with a width of approximately 80 feet.

Based on the current plans and project information, the existing Bear Valley Road overhead will be widened to a total width of approximately 114 feet. Current plans indicate that the overhead structure will be widened 21 feet to the north and 13 feet to the south, however it is our understanding that the plans are preliminary and subject to change. Foundations for the bridge widening will likely match the existing spread footings at the abutments and bents. The existing and proposed bridge configurations are shown on the Site Plan, Figure 2. A copy of the *General Plan* prepared by Dokken Engineering is presented in Appendix C.

2. SCOPE OF SERVICES

To prepare this FR, we performed the following scope of services:

- Reviewed published geologic maps, aerial photographs, in-house documents, and available as-built information. A list of referenced materials is provided in Section 16.0.
- Reviewed available as-built plans and project information regarding the existing bridge foundations and proposed improvements.
- Performed a field reconnaissance to observe the existing conditions of the bridge and surrounding areas.
- Drilled eight exploratory borings (A-14-001 through A-14-008) at both sides of the existing bents and along the bridge approaches to maximum depths of 50½ feet to examine and sample the prevailing soil conditions.

- Performed laboratory tests on selected samples to evaluate pertinent geotechnical parameters.
- Performed engineering analyses to evaluate potential seismic hazards, seismic design criteria, and foundation recommendations.
- Prepared this FR in general accordance with Caltrans' Foundation Report Preparation for Bridg*es*, December 2009.

3. EXCEPTION TO POLICY

Unless otherwise stated in this FR, our study and the recommendations for the proposed bridge improvements provided herein are in conformance with Caltrans' current policy.

4. FIELD INVESTIGATION AND TESTING PROGRAM

Our field investigation program was performed between November 18 and 20, 2014 and consisted of a site reconnaissance and drilling eight borings. The borings locations were based on preliminary project plans and information from Dokken Engineering. Table 4.1 summarizes the exploration locations, approximate surface elevations, and depths. The approximate boring locations are shown on the Site Plan, Figure 2.

TABLE 4.1
SUMMARY OF EXPLORATIONS

Exploration No.	Approximate Exploration Location				Exploration Depth (feet)
	Station No.	Line	Offset (feet)	Elevation (feet) [1]	
A-14-001	26+64	B.V. Rd CL	46.5L	2,994	50.5
A-14-002	22+03	B.V. Rd CL	48.5R	2,990	20.5
A-14-003	33+30	B.V. Rd CL	47.5L	2,984	40.5
A-14-004	35+24	B.V. Rd CL	62.5R	2,978	35.5
A-14-005	29+38	B.V. Rd CL	69.5R	2,964	50.5
A-14-006	29+24	B.V. Rd CL	74.5L	2,962	50.5
A-14-007	29+92	B.V. Rd CL	70R	2,964	50.5
A-14-008	29+78	B.V. Rd CL	74.5L	2,961	50.5

Note 1: Assumed elevations per 35% Project Plans.

Borings were advanced to depths ranging from approximately 20½ to 50½ feet below ground surface using a CME-75 drill rig equipped with 8-inch outer-diameter (OD), hollow-stem augers. A Geocon engineer logged the borings and visually classified soil samples at the time of drilling.

Sampling during drilling was performed in general accordance with the current Caltrans' *Soil and Rock Logging, Classification and Presentation Manual* (2010). Soil samples were typically collected at approximately 2.5- to 5-foot intervals. Relatively undisturbed soil samples were obtained by driving an approximately 3-inch-outside-diameter (OD) split-spoon sampler (California modified sampler) into the "undisturbed" soil mass with blows from a 140-pound hammer falling 30 inches. The sampler was equipped with 1-inch-long by 2.5-inch-diameter brass rings to facilitate sample removal and laboratory testing. Standard Penetration Tests (SPTs) were performed by driving a 2-inch-OD, 18 inch long split-spoon sampler in general accordance with American Society for Testing and Materials (ASTM) D-1586. The number of blows required to drive the samplers (blow counts) the last 12 inches of the 18-inch sample drive (or portion thereof) are reported on the boring logs included in Appendix A. In addition, a pocket penetrometer was used in the field to determine the consistency of cohesive soil.

5. LABORATORY TESTING PROGRAM

We performed laboratory tests in general conformance with California Test Methods (CTM) and generally accepted test methods of the ASTM. We performed the following tests:

- In-Place Dry Density and Moisture Content: ASTM D2937 (CTM 226)
- Direct Shear Strength: ASTM D 3080
- Consolidation: ASTM D 2435
- Atterberg Limits: ASTM D 4318
- Grain Size Distribution: ASTM D 422
- Compaction Curve: D 1557
- R-value: CTM 301
- pH and Resistivity: CTM 643
- Sulfate Content: CTM 417
- Chloride Content: CTM 422

Laboratory test results are presented in Appendix B. The results of dry density and moisture content testing are presented on the boring logs (Appendix A).

6. SITE GEOLOGY AND SUBSURFACE CONDITIONS

6.1 Topography and Geology

The area surrounding the Bear Valley Overhead at BNSF consists of undeveloped, commercial, and industrial land. The configuration of the proposed bridge improvements will generally maintain the existing bridge elevation and alignment.

The project vicinity is relatively flat with localized variations. The average roadway ground surface elevations range from approximately 2,991 feet Mean Sea Level (MSL) at the western project extents (Sta. 18+00) to approximately 2,990 feet MSL at the existing Bear Valley Road overhead bridge deck to approximately 2957 feet MSL at the eastern project extents (Sta. 40+85). The roadway approaches to the bridge consist of elevated fill embankments up to 36 feet high with side slope inclinations at approximately 2:1 (horizontal to vertical).

To the east of the intersection of Bear Valley Road and Ridgecrest Road, between Sta. 36+50 and Sta.40+85, the north side of Bear Valley Road is bounded by an ascending slope up to 20 feet high and with side slope inclinations of approximately 2.5:1 (H:V).

Below the existing bridge, within the BSNF railroad right-of-way, the ground surface elevation is approximately 2,965 feet MSL.

The site is located within the southwestern portion of the Mojave Desert geomorphic province. The site and near vicinity are located in an area underlain by middle to early Pleistocene very old alluvial fan deposits, (map symbol Qvof) as mapped by Morton & Miller (2003).

6.2 Types of Soil and Rock

Based on the results of our investigation, the bridge site is underlain by previously placed fill overlying alluvium. The alluvial soil generally consists of medium dense poorly graded sand (SP) and well graded sand (SW). The soil conditions encountered are described in detail below as well as on the boring logs presented in Appendix A. The soil descriptions below include the Unified Soil Classification System (USCS) symbol, where applicable.

6.2.1 Previously Placed Fill

Previously placed fill was encountered in each of our borings. The fill encountered in our borings generally consisted of loose to medium dense silty sand (SP-SM), loose sand (SP), and very stiff sandy silt (ML) with varying amounts of gravel. The existing fill appears to be performing well and is considered suitable for continued support of the existing improvements.

The thickness of fill encountered in our borings performed adjacent to the bents ranged between 6 and 9 feet. The previously placed fill may be suitable for direct support of the new abutment, bents, and crash walls.

6.2.2 Alluvium (Qvof)

Alluvium was encountered in each of our borings. The alluvium underlies the previously placed fill and extends to at least 50½ feet, the maximum depth explored. The alluvium encountered generally consists of medium dense poorly graded sand (SP) and well graded sand (SW) with varying amounts of silt and gravel. Based on the dense nature of the alluvium, the alluvium is considered suitable for direct support of new foundations.

6.3 Pertinent Soil Conditions or Geologic Hazards

The following sections discuss other pertinent soil conditions or potential geologic hazards evaluated for the project including landslides, embankment failures, ground subsidence, expansive soils, and collapsible soils.

6.3.1 Landslides

No landslides were observed during our site investigation, and none are known to exist at this location that would impact the proposed project.

6.3.2 Embankment Failures

No embankment failures were observed during our site investigation.

6.3.3 Ground Subsidence

Ground subsidence occurs where loose geologic units undergo a densification process. Subsidence can result from the extraction of mineral resources and/or groundwater, as well as the rapid settlement induced by seismic activity. Based on the subsurface conditions at the site, potential for ground subsidence is considered low.

6.3.4 Expansive Soils

Expansive soils possess a high swelling or shrinking potential due to change in moisture content. The common materials associated with high expansion potential are clays. Low to moderate plasticity silts and clays were encountered in our borings. Proposed foundations will be supported below a depth where significant moisture variation is expected. Thus, the potential for expansive soils to affect the proposed foundations is considered low.

6.3.5 Collapsible Soils

Collapsing soils are unsaturated soils that undergo a large volume change upon saturation, even without increase in external loads. Soils that generally display collapsible potential are porous and have low dry density. Based on the one-dimensional consolidation laboratory test results, the soils generally exhibit between zero and 2% volumetric change upon saturation. Provided proper drainage is implemented, the potential for collapsible soils to adversely affect the project is considered low.

6.4 Depth to Bedrock

Bedrock was not encountered in our borings explored to total depths ranging from approximately 20½ feet to 50½ feet (approximate elevations 2,969.5 and 2,911.5 feet MSL), respectively. Based on our understanding of the site geologic conditions, we anticipate the depth to bedrock is well below the depth of the proposed improvements.

6.5 Groundwater

Groundwater was not encountered in the borings drilled during our subsurface evaluation and is not anticipated to be a significant design or construction consideration for the project. Fluctuations of groundwater levels may occur due to variations in precipitation, temperature, and other factors. Depth to groundwater can also vary significantly due to localized pumping, irrigation practices, and seasonal fluctuations. Therefore, it is possible that future groundwater may be higher or lower than the levels observed during our investigation.

Based on the California Department of Water Resources (DWR) water data library (http://www.water.ca.gov/waterdatalibrary/), periodic groundwater measurements for a cluster of groundwater observation wells located approximately 1,200 feet south of the site was available for the period of March 1994 through September 2014. The four observation wells comprising the cluster (identified as state wells 04N04W03A001S, 04N04W03A002S, 04N04W03A003S, and 04N04W03A004S) were completed to depths ranging from approximately 235 to 790 feet below the existing ground surface. Periodic measurements in each well indicate variable groundwater elevations seasonally fluctuating between a high of approximately 2,806 feet MSL to a low of approximately 2,750 feet MSL corresponding to groundwater depths of 177 feet to 232 feet below ground surface, respectively. Groundwater was not encountered in the borings excavated to a maximum depth of approximately 50½ feet during our subsurface evaluation.

The *Bear Valley Road Cutoff Widen General Plan* includes LOTB sheets for four prior borings conducted at the site in 2001. The prior borings were conducted to maximum depths of approximately 74½ feet (corresponding to elevation 2,889). The LOTBs do not indicate that groundwater was encountered during the boring excavation.

7. SCOUR EVALUATION

The site is not located near an active watercourse; therefore, a scour study is not warranted.

8. CORROSION EVALUATION

According to Caltrans' *Corrosion Guidelines* (Version 2.0, November 2012), soils are considered corrosive to foundation elements if one or more of the following conditions exist: chloride concentration is 500 parts per million (ppm) or greater, or sulfate concentration is 2,000 ppm or greater, or the potential of hydrogen (pH) is 5.5 or less. Resistivity serves as an indicator parameter for the possible presence of soluble salts and is not included as a parameter to define a corrosive area for structures. A minimum resistivity value for soil and/or water less than 1,000 ohm-centimeters may indicate the presence of high quantities of soluble salts and a higher propensity for corrosion.

Resistivity, pH, chlorides, and sulfates tests were performed on two samples selected at random to generally evaluate the corrosion potential to subsurface structures. These tests were performed in accordance with CTM Nos. 417, 643,and 422. The results are presented in Table 8.1 and should be considered for design of underground structures.

TABLE 8.1
SOIL CORROSION TEST SUMMARY

Location – Boring/ Sample No.	Sample Depth (feet)	Resistivity (ohm centimeters)	pH	Chloride Content (ppm)	Sulfate Content (ppm)
A-14-006	0-5	2600	8.26	40	0
A-14-005	3	3100	7.63	10	0

Proposed improvements in contact with the ground should be designed and constructed in accordance with Caltrans' *Standard Specifications* and good construction practices. Geocon does not practice in the field of corrosion engineering. If corrosion sensitive improvements are planned, it is recommended that further evaluations by a corrosion engineer be performed to incorporate the necessary precautions to avoid premature corrosion on buried metal pipes and concrete structures in direct contact with the soils.

9. SEISMIC EVALUATION

9.1 Ground Motion Evaluation

The design response spectrum for the bridge was analyzed based on *Caltrans 2013 Seismic Design Procedure*. Both the deterministic and probabilistic response spectrums for the site were estimated using Caltrans' *Deterministic Response Spectrum Spreadsheet, Probabilistic Response Spectrum Spreadsheet* (after USGS), *2008 USGS National Seismic Hazard Map* and the *ARS Online* web tools. Site-specific information used in the procedure included the latitude of 34.471316° N and the longitude of -117.279514° W.

Site seismicity was analyzed based on Caltrans' *2013 Seismic Design Procedure*. This procedure is based on current Caltrans *Seismic Design Criteria (Appendix B), Deterministic PGA Map, ARS Online Report*, *Geotechnical Manual,* and USGS probabilistic seismic hazard analysis and tools. Based on Caltrans' web-based *ARS Online* application (V2.3.06, accessed January 17, 2015) and associated reports, key information for the controlling faults is summarized in Table 9.1 below.

TABLE 9.1
FAULT INFORMATION

Fault Name	North Frontal (West)	San Andreas (S. San Bernardino)	Helendale– So Lockhart
Fault ID#	279	325	241
M_{Max}	7.2	7.9	7.4
Fault Type	Rev	SS	SS
Fault Dip	49°	90°	90°
Dip Direction	S	V	V
Top of Rupture	0 km	0 km	0 km
Bottom of Rupture	15.8 km	12.8 km	13 km
Distance to Site (R_{RUP})	10.11 km	27.83 km	20.63 km
Depth to rock with Shear Wave Velocity of 1 km/sec ($Z_{1.0}$)	n/a*	n/a*	n/a*
Depth to rock with Shear Wave Velocity of 2.5 km/sec ($Z_{2.5}$)	n/a*	n/a*	n/a*

*Note: Site is not located within sedimentary basin as mapped/defined by Caltrans' *Seismic Design Criteria (Appendix B);* therefore, Basin Factors are not applicable.

Based on the soil conditions encountered during site exploration, the site is underlain by medium dense to dense alluvial soils and most closely reflects a Caltrans Soil Type D. We calculated an average shear wave velocity in the upper 30 meters (V_{s30}) of approximately 280 meters per second (m/sec) based on the SPT values measured in borings A-14-006 and A-14-007 and the recommended procedures in Appendix A of Caltrans *Methodology for Developing Design Response Spectrum for Use in Seismic Design Recommendations*.

Both the deterministic response spectrum and the probabilistic response spectrum of the site were estimated using Caltrans' *Deterministic Response Spectrum Spreadsheet, Probabilistic Response Spectrum Spreadsheet* (after USGS), *2008 USGS National Seismic Hazard Map,* and the *ARS Online* web tools. Where distances to the controlling faults are less than 25 kilometers, near-field factors were applied in the analysis. The design response spectrum is the upper envelope of the spectral values of the deterministic response spectrum and the probabilistic response spectrum. The recommended design response spectrum is controlled by the probabilistic results as depicted on the Recommended Design Response Spectrum, Figure 4.

9.2 Fault Rupture

The project site does not lie within or adjacent to an Alquist-Priolo Earthquake Fault Zone. In addition, there are no known or suspected faults that cross the project alignment or near vicinity. Therefore, ground rupture due to active faulting is not considered a hazard to the project.

9.3 Liquefaction and Lateral Spreading

Liquefaction is a phenomenon in which saturated cohesionless soils are subject to a temporary loss of shear strength due to pore pressure buildup under the cyclic shear stresses associated with earthquakes. Primary factors that trigger liquefaction are: moderate to strong ground shaking (seismic source), relatively clean, loose granular soils (primarily poorly graded sands and silty sands), and saturated soil conditions (shallow groundwater). Lateral spreading (lateral deformations) can also occur during liquefaction events.

Based on the lack of groundwater within the upper 200 feet (see Section 6.5), the potential for liquefaction does not appear to be a hazard for the site. Since the potential for liquefaction is likely low, the potential for lateral spreading and other secondary effects, such as seismic-induced settlement, would also be low.

Dynamic compaction of dry and loose sands may occur during a major earthquake. Typically, settlements occur in thick beds of such soils. The soils underlying the site consist predominantly of sand that is generally dense to very dense and well consolidated. Based on these conditions, appreciable dry dynamic settlements are not anticipated.

9.4 Slope Stability

Fill slopes for the existing overcrossing approaches have an inclination ranging from approximately 2H:1V to 1½H:1V. Assuming the widened embankments are designed with appropriate, typical slope inclinations (2H:1V or flatter) and that fill materials meet Caltrans specifications for structure backfill, fill slopes should have an adequate factor of safety against deep-seated and shallow failures under static and seismic loading. Once the bridge configuration is selected, slope stability analysis may be required as part of future design-level studies.

10. AS-BUILT DATA

The following as-built plans for were provided by Dokken Engineering: *Bear Valley Cutoff, Apatite Street to Tamarisk Avenue,* 30 sheets, prepared by County of San Bernardino Transportation Department dated July 24, 1979. Copies of the as-built plans are included as Appendix D.

The existing overhead structure consists of a three-span, precast and prestressed I-Girder bridge supported by two end abutments and two interior bents. The abutments are supported by continuous spread footings and the bents are supported by isolated spread footings.

Sheet five of the as-built plans provide information on the basis of bearings and benchmark used to establish the elevations indicated on the plans. The as-built plans refer to a bridge deck elevation of 2993.46 feet MSL at the bridge centerline at Abutment 1 and a deck elevation of 2991.70 feet MSL at the bridge center line at Abutment 4. Elevations used in this report to describe the existing structures are based on the information provided on the as-built plans. If it is determined that the as-built plans and current project plans use different datums, then elevations should be revised to the current datum as part of the design-level studies for the project.

The existing bents are supported on reinforced concrete spread footings. The exterior piers at bent 2 and 3 are supported on 10 foot square footings with a bottom of footing elevation of 2,952 feet. Based on a ground surface elevation of 2,961 feet MSL, the footings supporting the north piers are embedded approximately 9 feet below the ground surface. Based on a ground surface elevation of 2,962 feet MSL, the footings supporting the south piers are embedded approximately 10 feet below the ground surface.

The center piers at bents 2 and 3 are supported on 12½ foot square footings with a bottom of footing elevation of 2,953 feet. Based on an interpolated ground surface elevation of 2,962 feet MSL, the existing footings are embedded approximately 9 feet below the ground surface.

The existing abutments are supported on 7-foot-wide, 2-foot-thick, by 82-foot-long reinforced concrete spread footings with a bottom of footing elevation of approximately 2,978 feet (abutment 1) and 2,977 feet (abutment 4). Based on a ground surface elevation of 2,986 feet MSL, the footing for abutment 1 is embedded approximately 8 feet below the ground surface. Based on a ground surface elevation of 2,984 feet MSL, the footing for abutment 4 is embedded approximately 7 feet below the ground surface.

The allowable bearing pressure for the footings is 3.5 tons per square foot (tsf).

11. FOUNDATION RECOMMENDATIONS

The existing bridge is supported on spread footings and appears to be performing well without evidence of significant settlement. Given the proven performance of the existing foundations, and provided that the bridge design loading does not appreciably increase above existing, we recommend that the foundations supporting the proposed bridge widening match the existing foundations as close as possible.

11.1 Shallow Foundations

Shallow foundations consisting of spread footings may be used to support the proposed bridge widening. Geocon should observe all foundation excavations to verify proper embedment into suitable materials. If unsuitable material is encountered at the proposed support locations, the material must be removed and replaced with engineered fill, or penetrated through by proposed foundations.

We performed settlement and bearing resistance analyses for assumed footing dimensions based on the loads provided by Dokken Engineering. In accordance with current Caltrans requirements, the abutment and ramp supports were analyzed using the latest Caltrans American Association of State Highway and Transportation Officials (AASHTO) LRFD *Bridge Design Specifications* (BDS) with Caltrans Amendments methodology.

Based on the soil types present at the site and the anticipated foundation loading, the foundation soils will likely undergo immediate settlements. We do not anticipate significant time-dependent consolidation settlement. We analyzed the shallow foundation settlement of conventional spread footings using immediate "elastic" settlement theory developed by Schmertmann.

The bearing capacity against shear failure was analyzed using the general bearing capacity equation developed by Terzaghi.

Based on the Caltrans LRFD 2008 *Memo to Designers Section 4-1 Spread Footings*, the structural engineer provides the geotechnical engineer with the specified effective footing width (B'), the ratio (B'L'), and the proposed embedment depths. With the provided B' and (B'/L') ratios, we calculated the effective footing length (L') for each provided B' and (B'/L') proposed footing dimensions. These specified parameters were provided by the structural engineer and are presented in Table 12.1a and 12.1b below. The geotechnical engineer provides the permissible net contact stress and the factored gross nominal bearing resistances as a function of the parameters mentioned above through an iterative process. Under the Service-I Limit State where settlement is analyzed, the permissible net contact stress is the net bearing stress which induces one inch of settlement. Under the Strength and Extreme Event Limit states, the factored gross nominal bearing resistances were analyzed using the bearing capacity equation developed by Terzaghi.

The following tables summarize the foundation design information as well as spread footing foundation design loads provided by the project structural engineer. The foundation recommendation analyses are provided herein and calculations are presented in Appendix E.

TABLE 12.1a
ASSUMED FOUNDATION DESIGN DATA FOR RIGHT SIDE WIDENING

Location	Design Method	Foundation Type	Finish Grade Elevation (ft.) [1]	Bottom of Footing Elevation (ft.)	B'/L' Ratio	Effective Footing Size (ft.)[2]		Permissible Settlement[3] (in.)
						B'	L'	
Abut 1	LRFD	Spread Footing	2,985	2,978	1.66	8.0	13.33	1"
Bent 2	LRFD	Spread Footing	2,963	2,953	1.13	12.5	14.17	1"
Bent 3	LRFD	Spread Footing	2,963	2,953	1.13	12.5	14.17	1"
Abut 4	LRFD	Spread Footing	2,963	2,977	1.66	8.0	13.33	1"

Notes:

1. Finish Grade is assumed.
2. The footing sizes are assumed.
3. Based on Caltrans' current practice, the total permissible settlement is one inch for multi-span structures with continuous spans or multi-column bents, one inch for single-span structures with diaphragm abutments, and two inches for single-span structures with seat abutments. Different permissible settlement under services loads may be allowed if structure analysis verifies that required level of serviceability is met.

TABLE 12.1b
ASSUMED FOUNDATION DESIGN DATA FOR LEFT SIDE WIDENING

Location	Design Method	Foundation Type	Finish Grade Elevation (ft.) [1]	Bottom of Footing Elevation (ft.)	B'/L' Ratio	Effective Footing Size (ft.)[2]		Permissible Settlement[3] (in.)
						B'	L'	
Abut 1	LRFD	Spread Footing	2,985	2978	2.63	8.0	21.1	1"
Bent 2	LRFD	Spread Footing	2,963	2953	1.76	12.5	22.0	1"
Bent 3	LRFD	Spread Footing	2,963	2953	1.76	12.5	22.0	1"
Abut 4	LRFD	Spread Footing	2,963	2977	2.63	8.0	21.1	1"

Notes:

1. Finish Grade is assumed.
2. The footing sizes are assumed.
3. Based on Caltrans' current practice, the total permissible settlement is one inch for multi-span structures with continuous spans or multi-column bents, one inch for single-span structures with diaphragm abutments, and two inches for single-span structures with seat abutments. Different permissible settlement under services loads may be allowed if structure analysis verifies that required level of serviceability is met.

TABLE 12.1.2c
DESIGN LOADS FROM THE STRUCTURAL DESIGNER FOR SPREAD FOOTINGS (RIGHT SIDE WIDENING)

Support No.	Service-I Limit State	Strength Limit State		Extreme Event Limit State	
	Total Load Max per Footing	Compression Max per Footing	Tension Max per Footing	Compression Max per Footing	Tension Max per Footing
Abut 1	469 kips	616 kips	NA	NA	NA
Bent 2	614 kips	840 kips	NA	676 kips	NA
Bent 3	614 kips	840 kips	NA	676 kips	NA
Abut 4	469 kips	616 kips	NA	NA	NA

Notes:

1. Maximum factored loads are estimated based on: Strength and Extreme Limit State for bents and Service-I Limit State for abutments.

TABLE 12.1.2d
DESIGN LOADS FROM THE STRUCTURAL DESIGNER FOR SPREAD FOOTINGS
(LEFT SIDE WIDENING)

Support No.	Service-I Limit State	Strength Limit State		Extreme Event Limit State	
	Total Load Max per Footing	Compression Max per Footing	Tension Max per Footing	Compression Max per Footing	Tension Max per Footing
Abut 1	580 kips	761 kips	NA	NA	NA
Bent 2	818 kips	1098 kips	NA	472 kips	NA
Bent 3	818 kips	1098 kips	NA	472 kips	NA
Abut 4	580 kips	761 kips	NA	NA	NA

Notes:
1. Maximum factored loads are estimated based on Strength and Extreme Limit State for bents and Service-I Limit State for abutments.

Based on the AASHTO LRFD BDS with Caltrans Amendments methodology, geotechnical resistance factors (ϕ_b) for shallow foundations were used for both Strength and Extreme Event Limit State loading. As determined from AASHTO LRFD BDS Amendments Table 10.5.5.2.2-1, a resistance factor of 0.45 was used for the Strength Limit State. As determined from AASHTO LRFD BDS Section 10.5.5.3.3, a resistance factor of 1.0 was used for the Extreme Event Limit State for spread footings.

TABLE 12.1e
FOUNDATION RECOMMENDATIONS FOR SPREAD FOOTINGS
(RIGHT SIDE WIDENING)

Support No	Footing Size (ft.)[3]		Bottom of Footing Elevation (ft.)	Minimum Footing Embedment Depth (ft.)	WSD (LRFD Service-I Limit State Load Combination)		LRFD		
							Service	Strength ϕ_b=0.45	Extreme Event ϕ_b=1.00
	B'	L'			Permissible Gross Contact Stress (ksf)	Allowable Gross Bearing Capacity (ksf)	q_{pn} Permissible Net Contact Stress (ksf)	q_R Factored Gross Nominal Bearing Resistance (ksf)	q_R Factored Gross Nominal Bearing Resistance (ksf)
Abut 1	9.0	14.31	2,978	7.0	N/A	N/A	11.2	30.3	N/A
Bent 2	12.5	14.17	2,953	10.0	N/A	N/A	7.9	20.15	44.7
Bent 3	12.5	14.17	2,953	10.0	N/A	N/A	7.9	20.15	44.7
Abut 4	9.0	14.31	2,977	7.0	N/A	N/A	11.2	30.3	N/A

Notes:
1. Recommendations are based on the assumed foundation geometry and the loads provided by the Structural Designer. The footing contact area is taken as equal to the effective footing area, where applicable.
2. See MTD 4-1 for definitions and applications of recommended design parameters.
3. The footing sizes for support are effective footing dimensions based on assumed foundation dimensions.

TABLE 12.1f
FOUNDATION RECOMMENDATIONS FOR SPREAD FOOTINGS
(LEFT SIDE WIDENING)

Support No	Footing Size (ft.)[3]		Bottom of Footing Elevation (ft.)	Minimum Footing Embedment Depth (ft.)	WSD (LRFD Service-I Limit State Load Combination)		LRFD		
							Service	Strength ϕ_b=0.45	Extreme Event ϕ_b=1.00
	B'	L'			Permissible Gross Contact Stress (ksf)	Allowable Gross Bearing Capacity (ksf)	q_{pn} Permissible Net Contact Stress (ksf)	q_R Factored Gross Nominal Bearing Resistance (ksf)	q_R Factored Gross Nominal Bearing Resistance (ksf)
Abut 1	8.0	21.1	2,978	7.0	N/A	N/A	11.2	30.3	N/A
Bent 2	12.5	22.0	2,953	10.0	N/A	N/A	7.9	20.15	44.7
Bent 3	12.5	22.0	2,953	10.0	N/A	N/A	7.9	20.15	44.7
Abut 4	8.0	21.1	2,977	7.0	N/A	N/A	11.2	30.3	N/A

Notes:
1. Recommendations are based on the assumed foundation geometry and the loads provided by the Structural Designer. The footing contact area is taken as equal to the effective footing area, where applicable.
2. See MTD 4-1 for definitions and applications of recommended design parameters.
3. The footing sizes for support are effective footing dimensions based on assumed foundation dimensions.

Foundations designed in accordance with our recommendations should experience total settlements less than one inch under LRFD Service-I Limit State loading. We expect the majority of settlement will be immediate and will occur as the loads are applied during construction. If any of the support locations, footing embedment depths, or dimensions change during the design process, Geocon should be contacted for review and to provide an update of geotechnical design data, if necessary.

In the analysis of spread footings, settlement is the controlling factor for design purposes. If any of the support locations, footing embedment depths, or dimensions change during the design process, Geocon should be contacted for review and to provide an update of geotechnical design data, if necessary.

11.2 Tieback Walls

Description

The widening of Bear Valley Road at the BNSF overcrossing will require tieback retaining walls at the toe of the existing abutment slopes to facilitate construction of the proposed Bent 2 and Bent 3 foundations. The proposed tieback retaining walls will be approximately 130 feet long, with an anticipated retaining height up to approximately 8½ , and will retain an ascending 1½:1 (H:V) slope. Eachwall is proposed to have a single row of tiebacks installed at a proposed inclination of 10 degrees. Typical tieback horizontal spacing is 6 to 8 feet on center. The proposed tieback walls will be located in close proximity to Bent 2 and 3 and will facilitate construction of the new foundations.

Design Parameters

The designer of the tieback wall should verify locations of existing improvements and utilities in order to ensure the proposed tieback anchor locations are not in conflict with the existing structure.

Tieback walls consist of installing tieback anchors into slopes or excavations in a top-down construction sequence. Lagging or shotcrete facing should keep pace with excavation and anchor construction. Generally, the excavation should not be advanced deeper than 4 feet below the bottom of lagging or facing at any time. These unsupported gaps of up to 4 feet should only be allowed to stand for short periods of time (two days or less) in order to reduce the potential for soil sloughing and caving. Test sections may be completed during construction to observe if deeper cuts will stand. The contractor should be aware that borings were not performed at the location of the proposed tieback wall, and caving could occur if loose, granular soils are encountered.

The tieback wall should have a minimum embedment depth of 3 feet into competent soil of the base of the wall as per Load and Resistance Factor Design (LRFD) *Bridge Design Specifications (BDS) C11.9.5.2.*

The proposed tieback wall should be designed using the following soil properties and equivalent fluid pressures:

- Total Unit Weight of Soil (γ_{tot}) = 125 pounds per cubic foot
- Internal Angle of Friction (Φ) = 34 degrees
- Cohesion = 150 pounds per square foot
- Active Equivalent Fluid Pressure = 50 pounds per square foot
- Passive Equivalent Fluid Pressure = 500 pounds per square foot
- At-rest Equivalent Fluid Pressure = 85 pounds per square foot
- Estimated Nominal Anchor Bond Stress = 1,500 pounds per square foot

We recommend using the apparent earth pressure distribution provided on LRFD *BDS Figure 3.11.5.7.1-1(a) Apparent Earth Pressure Distributions for Anchored Walls Constructed from the Top Down in Cohesionless Soils for Walls with Single Level of Ground Anchors*. Anchor pullout capacity is influenced by soil conditions, method of anchor hole advancement, hole diameter, bonded length, grout type, and grouting pressure. The contractor must determine the ultimate anchor bond stress based on the selected construction method. The estimated nominal bond stress provided in this report is for planning purposes only.

The minimum horizontal spacing of anchors should be the larger of three times the diameter of the bonded zone or 5 feet as per LRFD *BDS Section 11.9.4.2*. If smaller spacing is required to develop the required load, consideration may be given to differing anchor inclinations between alternating anchors. Based on the wall geometry and location of the existing abutment piles, we recommend a minimum tieback unbonded length of 15 feet. The contractor must determine the minimum bonded length of the anchor based on the selected construction method as stated on the project plans.

Corrosion protection of the tieback anchors is recommended since it will be a permanent tieback structure. Corrosion protection shall be applied in accordance with the provisions of LRFD *Bridge Construction Specifications*, Section 6 *Ground Anchors*.

Settlement for the tieback wall can cause reduction in anchor loads, and therefore should be considered in design. A settlement profile behind anchored walls for cohesionless soil is presented in LRFD *BDS Figure C11.9.3.1-1*. The majority of the settlement is expected to be completed during construction.

The tieback walls should be provided with a drainage system adequate to prevent the buildup of hydrostatic forces.

Tieback Testing Program

Normally, tieback anchors are contractor-designed and installed, and there are numerous construction methods available. Anchor capacity is a function of construction method, depth of anchor, batter, diameter of the bonded section, and the length of the bonded section. Experience has shown that the use of pressure grouting during formation of the bonded portion of the anchor will increase the soil-grout bond stress. A pressure grouting tube should be installed during the construction of the anchor. Post grouting should be performed if adequate capacity cannot be obtained by other construction methods. Non-shrink grout with a minimum 28-day compressive strength of 4,000 psi should be used.
Two types of load tests should be performed on the tiebacks. Load testing should be performed in accordance with the guidelines of the Federal Highway Administration (FHWA 1999) or approved equivalent procedures. Performance tests are performed on a limited number of anchors to confirm the contractor's design, installation methods, and capacity. Proof tests are typically performed on the remaining anchors to verify adequate capacity.

Following a successful load test, we recommend that anchors be locked off at 80% of the anchor's allowable working load. Anchor test acceptance criteria should be established in the project plans and specifications. Acceptance criteria should include minimum and maximum elongation (displacement) and maximum allowable creep movement. Anchor stressing/testing should be conducted only after sufficient curing and strength has developed within the anchor grout. Anchors that fail to meet project specified test criteria should be locked off at an appropriate load and additional anchors should be constructed. Appropriate corrosion protection should be provided for the anchors.

12. GENERAL NOTES TO DESIGNER

This report is prepared based on the currently available project information including the proposed structures and foundations described herein. Geocon must be contacted for review and possible revised recommendations if the proposed structures and foundations are changed.

13. CONSTRUCTION CONSIDERATIONS

Areas to be developed should be cleared and stripped of obstructions, trees, bushes, grass, roots, and the upper few inches of soil containing organic debris. Soils/organics removed by stripping can be transported offsite or stockpiled for use in landscaping. Existing drainage and utility lines or other existing subsurface structures that are not to be utilized, if any, should be removed, destroyed or abandoned in compliance with applicable regulations.

Relevant specifications and important design criteria that were used in the geotechnical design of the foundations include:

- *Sections 6-3, 19-3, 19-5*, and *19-6* of Caltrans' *Standard Specifications*. Backfill should have an EI no greater than 50 and a Sand Equivalent of 20 or greater. Ponding or jetting of backfill should not be permitted. All structural backfill should be compacted to 95 percent of the maximum density as determined by CTM 216.
- Remedial grading should be performed to provide a relatively uniform soil mat beneath the footing and no oversized rock (with a maximum dimension of 12 inches or greater) within 5 feet of the footing.
- Retaining walls not restrained at the top and having a level backfill surface should be designed for an active soil pressure equivalent to the pressure exerted by a fluid density of 40 pcf in accordance with Caltrans' *Bridge Design Specifications* 3.20.1. Non-restrained walls supporting 2H:1V backfill should be designed for an equivalent fluid pressure of 70 pcf.
- All retaining walls should be provided with a drainage system adequate to prevent the buildup of hydrostatic forces.

Temporary excavations should be in compliance with applicable governing agency regulations. The Contractor should also execute a monitoring program for structures in proximity to deep excavations so that appropriate modifications to the excavation/shoring system can be implemented to minimize the surface deflection or structure damage in a timely manner, if warranted.

Foundation excavations should be observed by a representative of Geocon prior to the placement of reinforcing steel and concrete. If unanticipated soil conditions are encountered, foundation modifications may be required.

14. DISCLAIMER AND CONTACT INFORMATION

The recommendations contained in this report are based on specific project information regarding structure type, location, and design loads that have been provided by Dokken Engineering. If any changes are made during final project design, Geocon should review those changes to determine if these foundation recommendations are still applicable. Any questions regarding the above recommendations should be directed to the attention of Ms. Jelisa Thomas, 818-841-8388, at the Burbank office of Geocon.

15. CLOSURE

15.1 Foundation and Grading Plan Review

Geocon should review the grading plans and foundation plans prior to final design submittal to determine whether additional analysis and/or recommendations are required.

15.2 Limitations and Uniformity of Conditions

The recommendations of this report pertain only to the site investigated and are based upon the assumption that soil conditions do not deviate from those disclosed in the investigation. If any variations or undesirable conditions are encountered during construction, or if the proposed construction will differ from that anticipated herein, Geocon should be notified so that supplemental recommendations can be given. The evaluation or identification of the potential presence of hazardous or corrosive materials was not part of the scope of services provided by Geocon.

This report is issued with the understanding that it is the responsibility of the owner or his representative to ensure that the information and recommendations contained herein are brought to the attention of the architect and engineer for the project and incorporated into the plans, and that the necessary steps are taken to see that the contractor and subcontractors carry out such recommendations in the field.

The findings of this report are valid as of the present date. However, changes in the conditions of a property can occur with the passage of time, whether due to natural processes or the works of man on this or adjacent properties. In addition, changes in applicable or appropriate standards may occur, whether they result from legislation or the broadening of knowledge. Accordingly, the findings of this report may be invalidated wholly or partially by changes outside our control. Therefore, this report is subject to review and should not be relied upon after a period of three years. Our professional services were performed in accordance with generally acceptable geotechnical engineering principles and practices in the site area at this time. No warranty is provided, express or implied.

16. REFERENCES

1. California Department of Transportation, 2014, *ARS Online Version 2.3.06* http://dap3.dot.ca.gov/ARS_Online/ , accessed January 2014.
2. California Department of Transportation, 2013, *Seismic Design Criteria, Version 1.7.*
3. California Department of Transportation, *Deterministic Response Spectrum Spreadsheet,* 2012.
4. California Department of Transportation, *Probabalistic Response Spectrum Spreadsheet,* 2012.
5. California Department of Transportation, *Foundation Report Preparation for Bridge Foundations,* December 2009.
6. California Department of Transportation, *Geotechnical Services Design Manual, Version 1.0,* 2009.
7. County of San Bernardino Department of Transportation, [As-Built] Plans for Construction on Bear Valley Cutoff, *Apatite Street to Tamarisk Avenue*, July 24, 1979, 30 sheets.
8. Dokken Engineering, *Bear Valley Road Overhead General Plan, Sheets 1 and 2,* March 2012.
9. Dokken Engineering, *City of Victorville Street Improvements Plans for Bear Valley Road Overhead at BNSF Railroad, 35% Project Plans, Sheets 1 through 1,* undated.
10. Lim & Nascimento Engineering, Bear Valley Cutoff Widen General Plan, Sheets 1 through 21, dated March 3, 2003.
11. United States Department of Agriculture, *Web Soil Survey*, http://websoilsurvey.nrcs.usda.gov, accessed January 2015.
12. USGS, *2008 Interactive Deaggregations*, http://geohazards.usgs.gov/deaggint/2008/.
13. Unpublished reports, aerial photographs, and maps on file with Geocon.

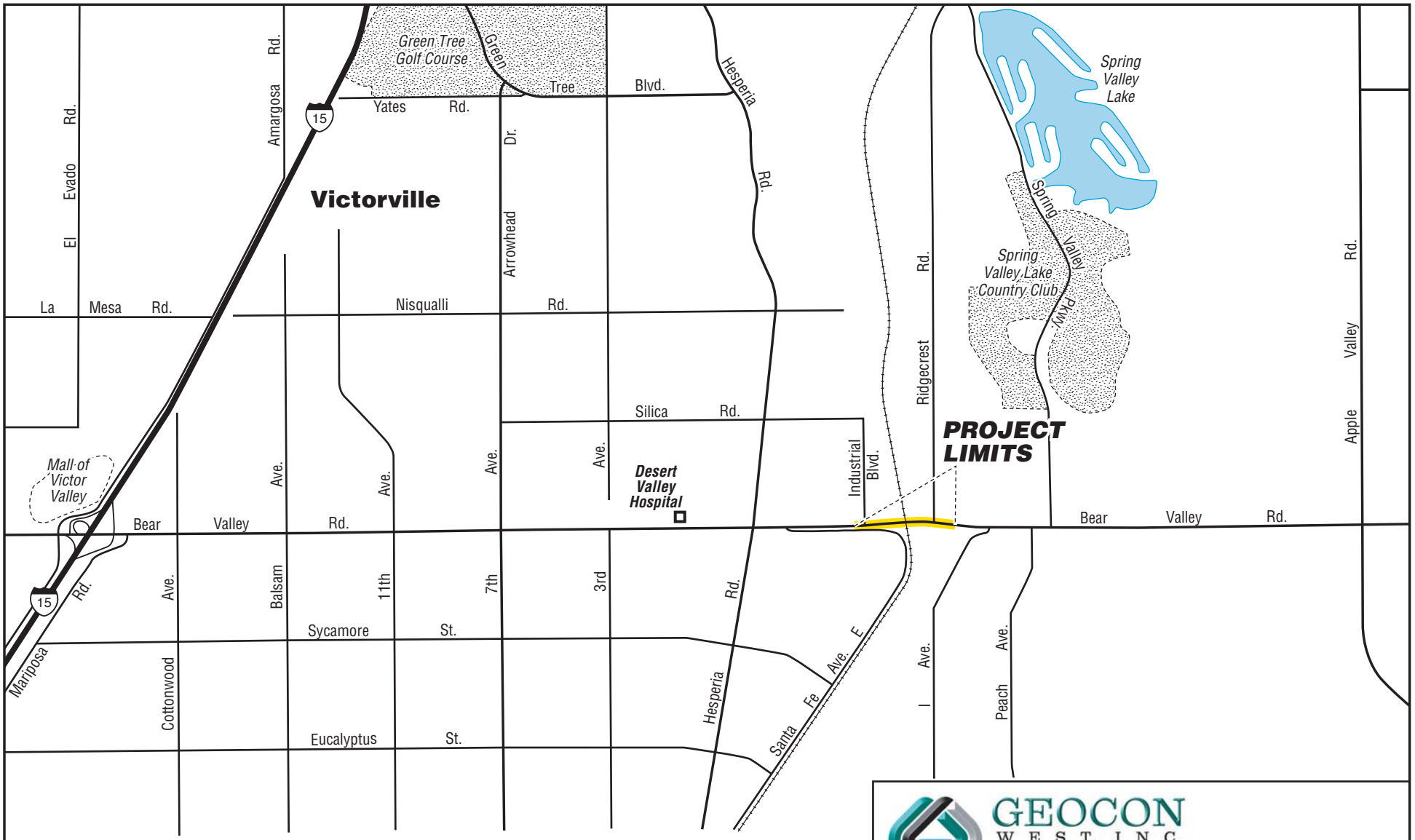

GEOCON WEST, INC.
3303 N. SAN FERNANDO BLVD. – SUITE 100 - BURBANK, CA. 91504
PHONE 818 841-8388 – FAX 818 841-1704

Bear Valley Overhead at BNSF

Victorville, California

VICINITY MAP

A9072-06-01	FEB 2017	Figure 1

BASE PLAN PROVIDED BY DOKKEN

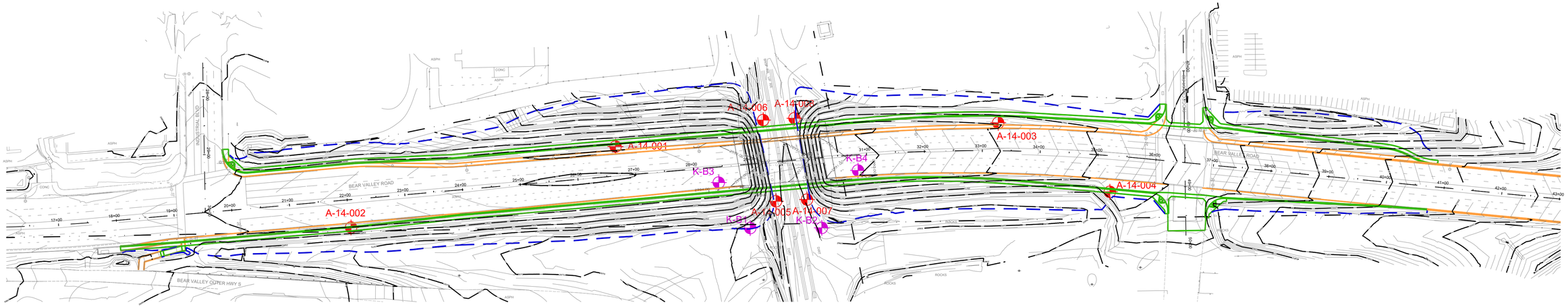

LEGEND

A-14-008	Boring Location and Number
K-B4	Prior Boring Location and Number (Kleinfelder)
	Limits of Proposed Grading
	Existing Curb and Sidewalk
	Proposed Curb and Sidewalk

0 100' 200'

GEOCON WEST, INC.

ENVIRONMENTAL GEOTECHNICAL MATERIALS
3303 N. SAN FERNANDO BLVD. - SUITE 100 - BURBANK, CA 91504
PHONE (818) 841-8388 - FAX (818) 841-1704

Drafted by: JTA | Checked by: NDB

SITE PLAN

BEAR VALLEY ROAD OVERHEAD
AT BNSF RAILROAD
CITYOF VICTORVILLE, CALIFORNIA

FEB 2017 | PROJECT NO. A9072-06-01 | FIG. 2

GEOLOGIC UNITS

Qdg - Disturbed ground (late Holocene)
Qw2 - Very young wash deposits, Unit 2 (late Holocene)
Qw1 - Very young wash deposits, Unit 1 (late Holocene)
Qyw - Young wash deposits (early Holocene)
Qyw3 - Young wash deposits, Unit 3 (early Holocene)
Qyw2 - Young wash deposits, Unit 2 (early Holocene)
Qyw1 - Young wash deposits, Unit 1 (early Holocene)
Qyf3 - Young alluvial-fan deposits, Unit 3 (Holocene and late Pleistocene)
Qya - Young alluvial-valley deposits (Holocene and late Pleistocene)

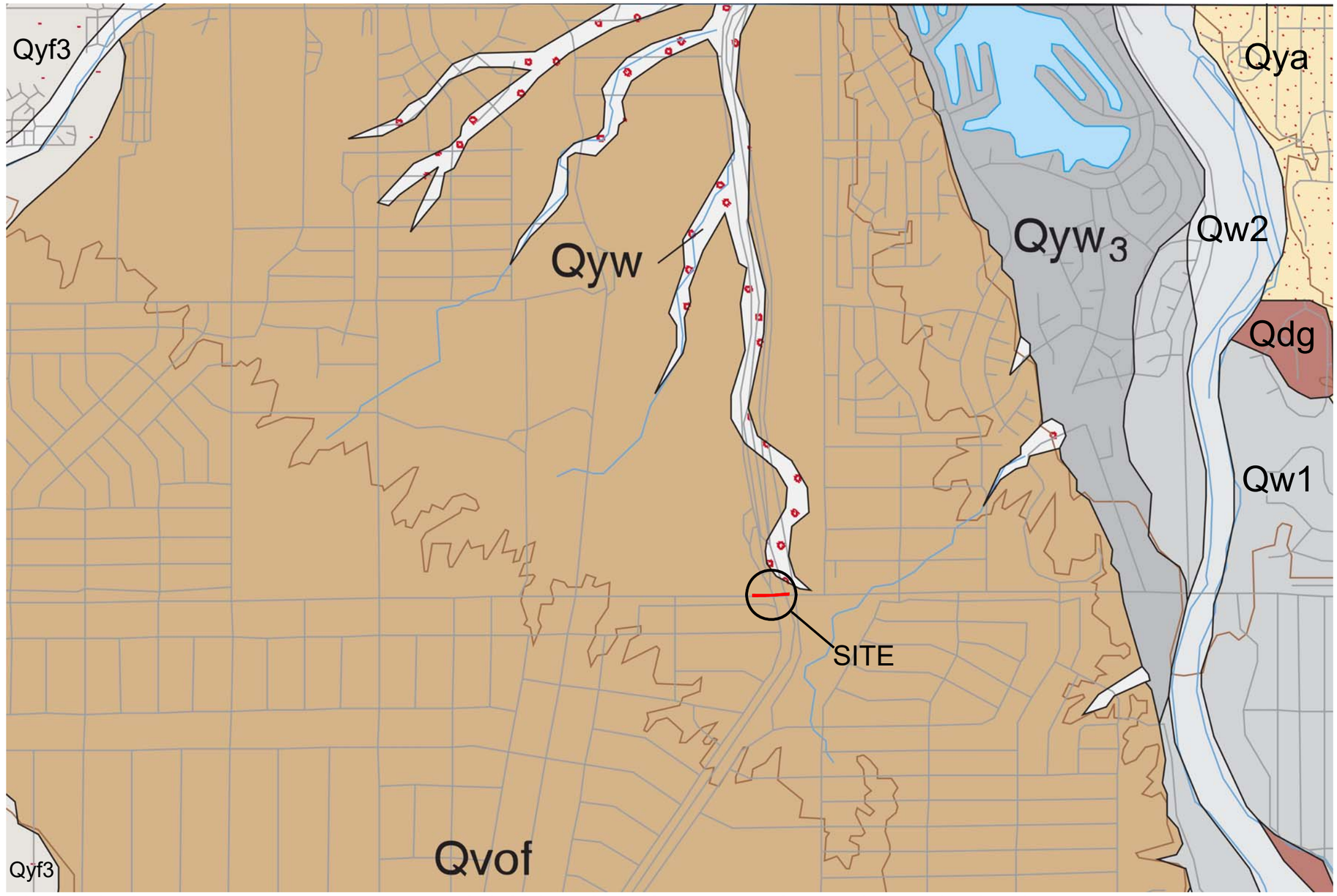

Reference: MORTON, D. M., MILLER, F. K., 2003, PRELIMINARY GEOLOGIC MAP OF THE SAN BERNARDINO 30' X 60' QUADRANGLE, CALIFORNIA

0 2000' 4000'

GEOCON WEST, INC.
ENVIRONMENTAL GEOTECHNICAL MATERIALS
3303 N. SAN FERNANDO BLVD. - SUITE 100 - BURBANK, CA 91504
PHONE (818) 841-8388 - FAX (818) 841-1704

Drafted by: RA | Checked by: GAK

GEOLOGIC MAP

BEAR VALLEY ROAD OVERHEAD
AT BNSF RAILROAD
CITYOF VICTORVILLE, CALIFORNIA

FEB 2017 | PROJECT NO. A9072-06-01 | FIG.3

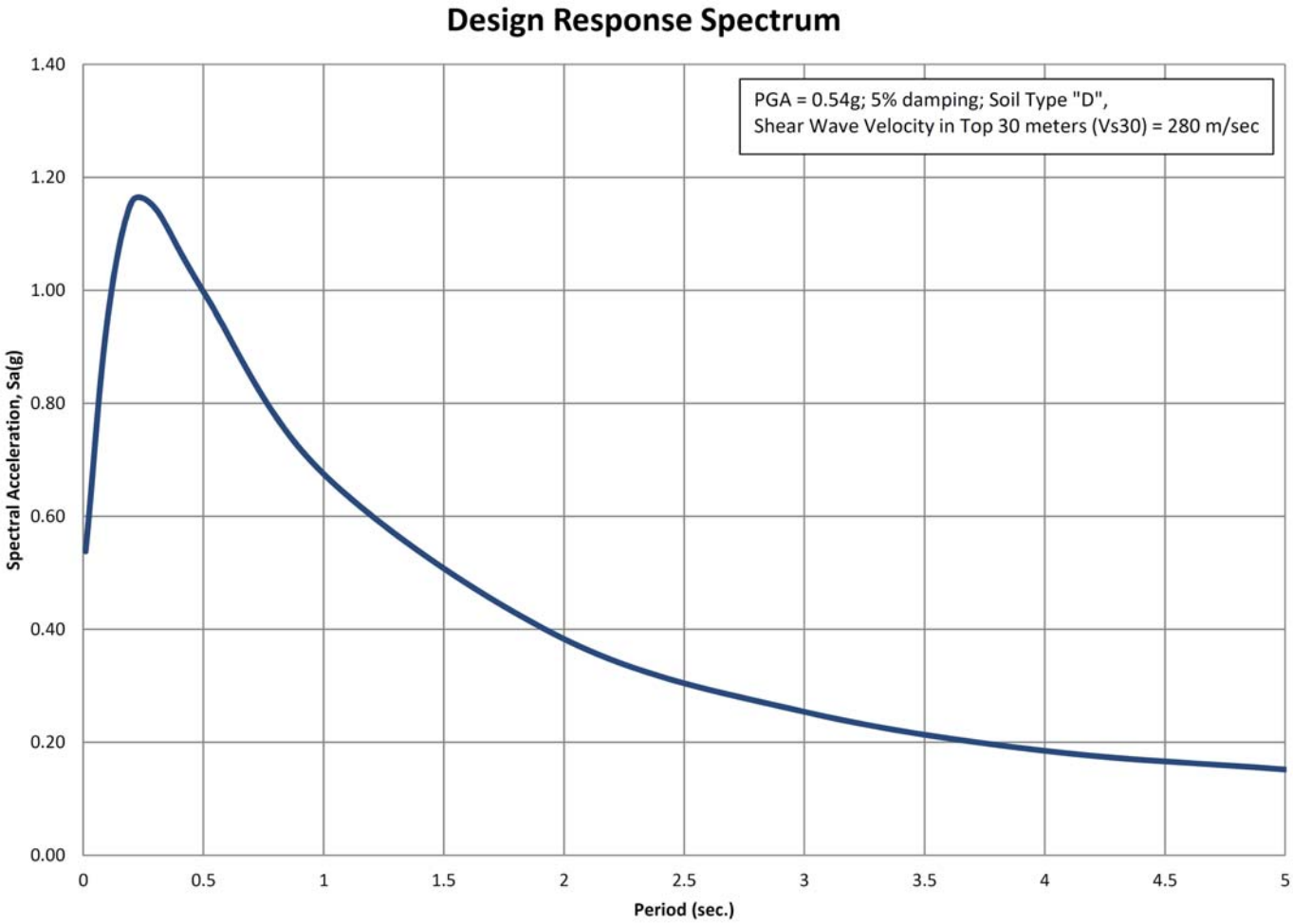

GEOCON
WEST, INC.

ENVIRONMENTAL GEOTECHNICAL MATERIALS
3303 N. SAN FERNANDO BLVD. - SUITE 100 - BURBANK, CA 91504
PHONE (818) 841-8388 - FAX (818) 841-1704

Drafted by: JTA	Checked by: NDB

RECOMMENDED DESIGN RESPONSE SPECTRUM

BEAR VALLEY ROAD OVERHEAD
AT BNSF RAILROAD
CITYOF VICTORVILLE, CALIFORNIA

FEB 2017	PROJECT NO. A9072-06-01	FIG. 4

APPENDIX A

APPENDIX A

FIELD INVESTIGATION

The field investigation for this Geotechnical Design Report (GDR) was performed between November 18 and 20, 2014, and consisted of a site reconnaissance and drilling eight borings. The explorations were located based on preliminary project plans and information from Dokken Engineering. Table A-1 is a summary of the exploration locations, approximate surface elevations, and depths. The boring locations are shown on the Site Plan, Figure 2.

TABLE A-1
SUMMARY OF EXPLORATIONS

Exploration No.	Approximate Exploration Location				Exploration Depth (feet)
	Station No.	Line	Offset (feet)	Elevation (feet)	
A-14-001	26+64	B.V. Rd CL	46.5L	2994	50.5
A-14-002	22+03	B.V. Rd CL	48.5R	2990	20.5
A-14-003	33+30	B.V. Rd CL	47.5L	2984	40.5
A-14-004	35+24	B.V. Rd CL	62.5R	2978	35.5
A-14-005	29+38	B.V. Rd CL	69.5R	2964	50.5
A-14-006	29+24	B.V. Rd CL	74.5L	2962	50.5
A-14-007	29+92	B.V. Rd CL	70R	2964	50.5
A-14-008	29+78	B.V. Rd CL	74.5L	2961	50.5

Borings A-14-001, -003, and -004 were drilled using a track-mounted CME-75 drill rig equipped with a 8-inch diameter, hollow-stem augers; boring A-14-002 was drilled with hand auger equipment; and borings A-14-005 through A-14-008 were drilled using truck-mounted CME-75 drill rig equipped with 8-inch-diameter, hollow-stem augers. Borings were advanced to depths ranging from approximately 20½ to 50½ feet.

Sampling during drilling was performed in general accordance with the current Caltrans' *Soil and Rock Logging, Classification and Presentation Manual* (2010). Soil samples were typically collected at approximately 2.5- to 5-foot intervals. Relatively undisturbed soil samples were obtained by driving an approximately 3-inch outside-diameter (OD) split-spoon sampler (California modified sampler) into the "undisturbed" soil mass with blows from a 140-pound hammer falling 30 inches. The sampler was equipped with 1-inch-long by 2.5-inch-diameter brass ring sample tubes to facilitate sample removal and laboratory testing. Standard Penetration Tests (SPTs) were performed by driving a 2-inch OD split-spoon sampler 18 inches in general accordance with American Society for Testing and Materials (ASTM) D-1586. The number of blows required to drive the samplers (blow counts) the last 12 inches of the 18-inch sample drive (or portion thereof) are reported on the logs of borings. Bulk samples of soil cuttings were also collected during the field exploration. In addition, a pocket penetrometer was used in the field to determine the consistency of cohesive soil.

The exploratory borings were sampled and logged by a staff engineer during the drilling operations. The soils encountered in the exploratory borings were classified in accordance with the Caltrans' *Soil and Rock Logging, Classification, and Presentation Manual* (2010). Upon completion of the field exploration program, the exploratory borings were backfilled with soil cuttings.

All samples were sealed in containers and transported to our laboratory for testing and further classification.

GROUP SYMBOLS AND NAMES

Graphic / Symbol	Group Names
GW	Well-graded GRAVEL Well-graded GRAVEL with SAND
GP	Poorly graded GRAVEL Poorly graded GRAVEL with SAND
GW-GM	Well-graded GRAVEL with SILT Well-graded GRAVEL with SILT and SAND
GW-GC	Well-graded GRAVEL with CLAY (or SILTY CLAY) Well-graded GRAVEL with CLAY and SAND (or SILTY CLAY and SAND)
GP-GM	Poorly graded GRAVEL with SILT Poorly graded GRAVEL with SILT and SAND
GP-GC	Poorly graded GRAVEL with CLAY (or SILTY CLAY) Poorly graded GRAVEL with CLAY and SAND (or SILTY CLAY and SAND)
GM	SILTY GRAVEL SILTY GRAVEL with SAND
GC	CLAYEY GRAVEL CLAYEY GRAVEL with SAND
GC-GM	SILTY, CLAYEY GRAVEL SILTY, CLAYEY GRAVEL with SAND
SW	Well-graded SAND Well-graded SAND with GRAVEL
SP	Poorly graded SAND Poorly graded SAND with GRAVEL
SW-SM	Well-graded SAND with SILT Well-graded SAND with SILT and GRAVEL
SW-SC	Well-graded SAND with CLAY (or SILTY CLAY) Well-graded SAND with CLAY and GRAVEL (or SILTY CLAY and GRAVEL)
SP-SM	Poorly graded SAND with SILT Poorly graded SAND with SILT and GRAVEL
SP-SC	Poorly graded SAND with CLAY (or SILTY CLAY) Poorly graded SAND with CLAY and GRAVEL (or SILTY CLAY and GRAVEL)
SM	SILTY SAND SILTY SAND with GRAVEL
SC	CLAYEY SAND CLAYEY SAND with GRAVEL
SC-SM	SILTY, CLAYEY SAND SILTY, CLAYEY SAND with GRAVEL
PT	PEAT
	COBBLES COBBLES and BOULDERS BOULDERS

Graphic / Symbol	Group Names
CL	Lean CLAY Lean CLAY with SAND Lean CLAY with GRAVEL SANDY lean CLAY SANDY lean CLAY with GRAVEL GRAVELLY lean CLAY GRAVELLY lean CLAY with SAND
CL-ML	SILTY CLAY SILTY CLAY with SAND SILTY CLAY with GRAVEL SANDY SILTY CLAY SANDY SILTY CLAY with GRAVEL GRAVELLY SILTY CLAY GRAVELLY SILTY CLAY with SAND
ML	SILT SILT with SAND SILT with GRAVEL SANDY SILT SANDY SILT with GRAVEL GRAVELLY SILT GRAVELLY SILT with SAND
OL	ORGANIC lean CLAY ORGANIC lean CLAY with SAND ORGANIC lean CLAY with GRAVEL SANDY ORGANIC lean CLAY SANDY ORGANIC lean CLAY with GRAVEL GRAVELLY ORGANIC lean CLAY GRAVELLY ORGANIC lean CLAY with SAND
OL	ORGANIC SILT ORGANIC SILT with SAND ORGANIC SILT with GRAVEL SANDY ORGANIC SILT SANDY ORGANIC SILT with GRAVEL GRAVELLY ORGANIC SILT GRAVELLY ORGANIC SILT with SAND
CH	Fat CLAY Fat CLAY with SAND Fat CLAY with GRAVEL SANDY fat CLAY SANDY fat CLAY with GRAVEL GRAVELLY fat CLAY GRAVELLY fat CLAY with SAND
MH	Elastic SILT Elastic SILT with SAND Elastic SILT with GRAVEL SANDY elastic SILT SANDY elastic SILT with GRAVEL GRAVELLY elastic SILT GRAVELLY elastic SILT with SAND
OH	ORGANIC fat CLAY ORGANIC fat CLAY with SAND ORGANIC fat CLAY with GRAVEL SANDY ORGANIC fat CLAY SANDY ORGANIC fat CLAY with GRAVEL GRAVELLY ORGANIC fat CLAY GRAVELLY ORGANIC fat CLAY with SAND
OH	ORGANIC elastic SILT ORGANIC elastic SILT with SAND ORGANIC elastic SILT with GRAVEL SANDY elastic ELASTIC SILT SANDY ORGANIC elastic SILT with GRAVEL GRAVELLY ORGANIC elastic SILT GRAVELLY ORGANIC elastic SILT with SAND
OL/OH	ORGANIC SOIL ORGANIC SOIL with SAND ORGANIC SOIL with GRAVEL SANDY ORGANIC SOIL SANDY ORGANIC SOIL with GRAVEL GRAVELLY ORGANIC SOIL GRAVELLY ORGANIC SOIL with SAND

FIELD AND LABORATORY TESTS

C	Consolidation (ASTM D 2435-04)
CL	Collapse Potential (ASTM D 5333-03)
CP	Compaction Curve (CTM 216 - 06)
CR	Corrosion, Sulfates, Chlorides (CTM 643 - 99; CTM 417 - 06; CTM 422 - 06)
CU	Consolidated Undrained Triaxial (ASTM D 4767-02)
DS	Direct Shear (ASTM D 3080-04)
EI	Expansion Index (ASTM D 4829-03)
M	Moisture Content (ASTM D 2216-05)
OC	Organic Content (ASTM D 2974-07)
P	Permeability (CTM 220 - 05)
PA	Particle Size Analysis (ASTM D 422-63 [2002])
PI	Liquid Limit, Plastic Limit, Plasticity Index (AASHTO T 89-02, AASHTO T 90-00)
PL	Point Load Index (ASTM D 5731-05)
PM	Pressure Meter
PP	Pocket Penetrometer
R	R-Value (CTM 301 - 00)
SE	Sand Equivalent (CTM 217 - 99)
SG	Specific Gravity (AASHTO T 100-06)
SL	Shrinkage Limit (ASTM D 427-04)
SW	Swell Potential (ASTM D 4546-03)
TV	Pocket Torvane
UC	Unconfined Compression - Soil (ASTM D 2166-06) Unconfined Compression - Rock (ASTM D 2938-95)
UU	Unconsolidated Undrained Triaxial (ASTM D 2850-03)
UW	Unit Weight (ASTM D 4767-04)
VS	Vane Shear (AASHTO T 223-96 [2004])

SAMPLER GRAPHIC SYMBOLS

- Standard Penetration Test (SPT)
- Standard California Sampler
- Modified California Sampler
- Shelby Tube
- Piston Sampler
- NX Rock Core
- HQ Rock Core
- Bulk Sample
- Other (see remarks)

DRILLING METHOD SYMBOLS

- Auger Drilling
- Rotary Drilling
- Dynamic Cone or Hand Driven
- Diamond Core

WATER LEVEL SYMBOLS

- First Water Level Reading (during drilling)
- Static Water Level Reading (short-term)
- Static Water Level Reading (long-term)

GEOCON WEST, INC.
Geocon West, Inc.
Environmental Geotechnical Materials
3303 N. San Fernando Blvd. - Suite 100
Burbank, CA 91504

BORING LOG LEGEND

Bear Valley Road overhead at BNSF Railroad

Date	Geocon Project No.	SHEET
JAN 2017	A9072-06-01	1 of 2

CONSISTENCY OF COHESIVE SOILS

Descriptor	Unconfined Compressive Strength (tsf)	Pocket Penetrometer (tsf)	Torvane (tsf)	Field Approximation
Very Soft	< 0.25	< 0.25	< 0.12	Easily penetrated several inches by fist
Soft	0.25 - 0.50	0.25 - 0.50	0.12 - 0.25	Easily penetrated several inches by thumb
Medium Stiff	0.50 - 1.0	0.50 - 1.0	0.25 - 0.50	Can be penetrated several inches by thumb with moderate effort
Stiff	1.0 - 2.0	1.0 - 2.0	0.50 - 1.0	Readily indented by thumb but penetrated only with great effort
Very Stiff	2.0 - 4.0	2.0 - 4.0	1.0 - 2.0	Readily indented by thumbnail
Hard	> 4.0	> 4.0	> 2.0	Indented by thumbnail with difficulty

APPARENT DENSITY OF COHESIONLESS SOILS

Descriptor	SPT N_{60} - Value (blows / foot)
Very Loose	0 - 4
Loose	5 - 10
Medium Dense	11 - 30
Dense	31 - 50
Very Dense	> 50

MOISTURE

Descriptor	Criteria
Dry	Absence of moisture, dusty, dry to the touch
Moist	Damp but no visible water
Wet	Visible free water, usually soil is below water table

PERCENT OR PROPORTION OF SOILS

Descriptor	Criteria
Trace	Particles are present but estimated to be less than 5%
Few	5 to 10%
Little	15 to 25%
Some	30 to 45%
Mostly	50 to 100%

SOIL PARTICLE SIZE

Descriptor		Size
Boulder		> 12 inches
Cobble		3 to 12 inches
Gravel	Coarse	3/4 inch to 3 inches
	Fine	No. 4 Sieve to 3/4 inch
Sand	Coarse	No. 10 Sieve to No. 4 Sieve
	Medium	No. 40 Sieve to No. 10 Sieve
	Fine	No. 200 Sieve to No. 40 Sieve
Silt and Clay		Passing No. 200 Sieve

PLASTICITY OF FINE-GRAINED SOILS

Descriptor	Criteria
Nonplastic	A 1/8-inch thread cannot be rolled at any water content.
Low	The thread can barely be rolled, and the lump cannot be formed when drier than the plastic limit.
Medium	The thread is easy to roll, and not much time is required to reach the plastic limit; it cannot be rerolled after reaching the plastic limit. The lump crumbles when drier than the plastic limit.
High	It takes considerable time rolling and kneading to reach the plastic limit. The thread can be rerolled several times after reaching the plastic limit. The lump can be formed without crumbling when drier than the plastic limit.

CEMENTATION

Descriptor	Criteria
Weak	Crumbles or breaks with handling or little finger pressure.
Moderate	Crumbles or breaks with considerable finger pressure.
Strong	Will not crumble or break with finger pressure.

NOTE: This legend sheet provides descriptors and associated criteria for required soil description components only. Refer to Caltrans Soil and Rock Logging, Classification, and Presentation Manual (July 2007), Section 2, for tables of additional soil description components and discussion of soil description and identification.

LOGGED BY	BEGIN DATE	COMPLETION DATE	BOREHOLE LOCATION (Lat/Long or North/East and Datum)	HOLE ID
RP	11-20-14	11-20-14		A-14-001
DRILLING CONTRACTOR			BOREHOLE LOCATION (Offset, Station, Line)	SURFACE ELEVATION
Cascade			46.50' Lt Sta 26+64 Bear Valley Rd. CL	2994.0 ft
DRILLING METHOD			DRILL RIG	BOREHOLE DIAMETER
Hollow-Stem Auger			CME 75 Track	8 in
SAMPLER TYPE(S) AND SIZE(S) (ID)			SPT HAMMER TYPE	HAMMER EFFICIENCY, ERi
Bulk, Std Cal (2.5")			Automatic 140 lb 30" drop	68%
BOREHOLE BACKFILL AND COMPLETION			GROUNDWATER READINGS DURING DRILLING AFTER DRILLING (DATE)	TOTAL DEPTH OF BORING
Soil Cuttings			No Groundwater Encountered	50.5 ft

ELEVATION (ft)	DEPTH (ft)	DESCRIPTION	Sample Location	Sample Number	Blows per 6 in.	Blows per foot	Recovery (%)	RQD (%)	Moisture Content (%)	Dry Unit Weight (pcf)	Shear Strength (tsf)	Drilling Method	Casing Depth	Remarks
	0	Well-graded SAND with SILT (SW-SM); medium dense; brown; dry to moist; trace fine GRAVEL [FILL].												
	1													
2992.00	2													
	3													
2990.00	4	SILTY SAND (SM); medium dense; reddish brown; moist; trace coarse GRAVEL; mostly fine to medium with trace coarse SAND [FILL].			13 16 16	32	100		5.4	107.2				
	5			5			100							PA
2988.00	6													
	7			Bulk										
2986.00	8													
	9	NO RECOVERY.			19 28 28	56	100							
2984.00	10													
	11													
2982.00	12													
	13													
2980.00	14	Mostly fine to medium SAND; decrease in SILT content.			10 14 17	31	100		4.1	98.2				
	15			15										DS, C
2978.00	16													
	17													
2976.00	18													
	19	Loose; trace fine GRAVEL; mostly medium SAND.			8 12 14	26	100		5.1	110.4				
2974.00	20			20										
	21													
2972.00	22													
	23													
2970.00	24	Medium dense; little fine GRAVEL; decrease in SILT content.				30	100		4.0	109.0				
	25													

(continued)

GEOCON WEST, INC.
Geocon West, Inc.
3303 North San Fernando Blvd, Suite 100
Burbank CA 91504
Telephone: 818-841-8388
Fax: 818-841-1704

PROJECT OR BRIDGE NAME
Bear Valley Road overhead at BNSF Railroad

PROJECT NO.
A90720601

DATE

HOLE ID
A-14-001

GEOCON WEST 5BR-STANDARD A9072-06-01 BEAR VALLEY ROAD BORINGS.GPJ CALTRANS LIBRARY DEC09-UNLOCK 2.GLB 2/16/15

ELEVATION (ft)	DEPTH (ft)	Material Graphics	DESCRIPTION	Sample Location	Sample Number	Blows per 6 in.	Blows per foot	Recovery (%)	RQD (%)	Moisture Content (%)	Dry Unit Weight (pcf)	Shear Strength (tsf)	Drilling Method	Casing Depth	Remarks
	25		SILTY SAND (SM) *(continued)*.		25	10 12 18					109.0				C
2968.00	26														
	27														
2966.00	28														
	29		Increase in SILT content.			13 17 22	39	100		9.1	120.4				
2964.00	30				30										
	31														
2962.00	32														
	33														
2960.00	34					6 8 10	18	100		2.8	118.3				
	35		Loose; strong brown; mostly fine to medium SAND.		35										C
2958.00	36														
	37														
2956.00	38														
	39		Poorly graded SAND (SP); medium dense; strong brown; moist; mostly fine to medium SAND [ALLUVIUM].			10 18 18	36	100		4.3	117.4				
2954.00	40				40										
	41														
2952.00	42														
	43														
2950.00	44		Dense; mottled pale brown and reddish brown.			27 50 50 for 6"		100		3.2	107.8				
	45				45										
2948.00	46														
	47														
2946.00	48														
	49					32 37 50 for 6"		100		1.3	107.9				
2944.00	50				50										
	51		Bottom of borehole at 50.5 ft bgs												
2942.00	52		Borehole terminated at planned depth.												
	53		This Boring Record was developed in accordance with the Caltrans Soil & Rock Logging, Classification, and Presentation Manual (2010) except as noted on the Soil or Rock Legend or below.												
2940.00	54														
	55														

GEOCON WEST, INC.

Geocon West, Inc.
3303 North San Fernando Blvd, Suite 100
Burbank CA 91504
Telephone: 818-841-8388
Fax: 818-841-1704

PROJECT OR BRIDGE NAME
Bear Valley Road overhead at BNSF Railroad

PROJECT NO.
A90720601

DATE

HOLE ID
A-14-001

SHEET
2 of 2

GEOCON WEST 5BR-STANDARD A9072-06-01 BEAR VALLEY ROAD BORINGS.GPJ CALTRANS LIBRARY DEC09-UNLOCK 2.GLB 2/16/15

LOGGED BY	BEGIN DATE	COMPLETION DATE	BOREHOLE LOCATION (Lat/Long or North/East and Datum)	HOLE ID
RA	11-20-14	11-20-14		A-14-002
DRILLING CONTRACTOR			BOREHOLE LOCATION (Offset, Station, Line)	SURFACE ELEVATION
Geocon			48.50' Rt Sta 22+03 Bear Valley Rd. C	2290.0 ft
DRILLING METHOD			DRILL RIG	BOREHOLE DIAMETER
Hand Auger			N/A	4 in
SAMPLER TYPE(S) AND SIZE(S) (ID)			SPT HAMMER TYPE	HAMMER EFFICIENCY, ERi
Bulk, Std Cal (2.5")			Slide Hammer	N/A
BOREHOLE BACKFILL AND COMPLETION			GROUNDWATER READINGS DURING DRILLING AFTER DRILLING (DATE)	TOTAL DEPTH OF BORING
Soil Cuttings			No Groundwater Encountered	20.5 ft

ELEVATION (ft)	DEPTH (ft)	DESCRIPTION	Sample Location	Sample Number	Blows per 6 in.	Blows per foot	Recovery (%)	RQD (%)	Moisture Content (%)	Dry Unit Weight (pcf)	Shear Strength (tsf)	Drilling Method	Casing Depth	Remarks
	0	Poorly graded SAND with SILT (SP-SM); loose; pale brown; dry; some GRAVEL; mostly fine to medium with some coarse SAND [FILL].					100							CP, EI, R
	1													
2288.00	2	Pale brown to reddish brown; moist; increase in SILT content.												
	3	Some SILT pods.												
2286.00	4													
	5	Brown to reddish brown; moist; mostly fine to medium with trace coarse SAND.		5			100		7.5	106.6				C
2284.00	6	Trace concrete fragments.												
	7													
2282.00	8	Increse in SILT pods.												
	9	Trace coarse GRAVEL.												
2280.00	10			10			100		6.0	102.6				C
	11													
2278.00	12	Decrease in SILT content.												
	13	Increase in SILT content.												
2276.00	14	Poorly graded SAND (SP); medium dense; pale brown; moist; some GRAVEL; mostly fine to medium with some coarse SAND; trace SILT [ALLUVIUM].												
	15			15			100		3.4	97.5				C
2274.00	16	Trace GRAVEL.												
	17													
2272.00	18	Some SILT.												
	19	Some GRAVEL; trace SILT.												
2270.00	20			20			100		3.9	102.1				
	21	Bottom of borehole at 20.5 ft bgs												
2268.00	22	Borehole terminated at planned depth.												
	23	This Boring Record was developed in accordance with the Caltrans Soil & Rock Logging, Classification, and Presentation Manual (2010) except as noted on the Soil or Rock Legend or below.												
2266.00	24													
	25													

GEOCON WEST, INC.

Geocon West, Inc.
3303 North San Fernando Blvd, Suite 100
Burbank CA 91504
Telephone: 818-841-8388
Fax: 818-841-1704

PROJECT OR BRIDGE NAME
Bear Valley Road overhead at BNSF Railroad

PROJECT NO.
A90720601

DATE

HOLE ID
A-14-002

SHEET
1 of 1

GEOCON WEST 5BR-STANDARD A9072-06-01 BEAR VALLEY ROAD BORINGS.GPJ CALTRANS LIBRARY DEC09-UNLOCK 2.GLB 2/16/15

LOGGED BY	BEGIN DATE	COMPLETION DATE	BOREHOLE LOCATION (Lat/Long or North/East and Datum)	HOLE ID
RP	11-20-14	11-20-14		A-14-003
DRILLING CONTRACTOR			BOREHOLE LOCATION (Offset, Station, Line)	SURFACE ELEVATION
Cascade			47.50' Lt Sta 33+03 Bear Valley Rd. C	2984.0 ft
DRILLING METHOD			DRILL RIG	BOREHOLE DIAMETER
Hollow-Stem Auger			CME 75 Track	8 in
SAMPLER TYPE(S) AND SIZE(S) (ID)			SPT HAMMER TYPE	HAMMER EFFICIENCY, ERi
Bulk, Std Cal (2.5")			Automatic 140 lb 30" drop	68%
BOREHOLE BACKFILL AND COMPLETION			GROUNDWATER READINGS DURING DRILLING AFTER DRILLING (DATE)	TOTAL DEPTH OF BORING
Soil Cuttings			No Groundwater Encountered	40.5 ft

ELEVATION (ft)	DEPTH (ft)	Material Graphics	DESCRIPTION	Sample Location	Sample Number	Blows per 6 in.	Blows per foot	Recovery (%)	RQD (%)	Moisture Content (%)	Dry Unit Weight (pcf)	Shear Strength (tsf)	Drilling Method	Casing Depth	Remarks
	0		SILTY SAND (SM); loose; brown; dry to moist; trace fine GRAVEL; mostly medium to coarse SAND [FILL].		Bulk			100							CP, EI, R
	1														
2982.00	2		Poorly graded SAND (SP); loose; reddish brown; moist; trace fine GRAVEL; mostly fine to medium with trace coarse SAND; trace SILT [FILL].			10	26	100		3.8	103.6				
	3				3	13 13									DS
2980.00	4														
	5					11	27	100		4.4	108.3				
2978.00	6				6	13 14									C
	7														
2976.00	8		Medium dense; mostly fine to medium SAND; no SILT.			15	43	100		8.2	120.0				
	9				9	16 27									
2974.00	10														
	11		Loose; reddish brown; trace fine GRAVEL; mostly fine SAND; trace SILT.			9	21	100		7.1	109.5				
2972.00	12				12	10 11									C
	13														
2970.00	14														
	15		SILTY SAND (SM); medium dense; white; moist; trace fine GRAVEL; low plasticity fines; mostly medium SAND [FILL].			8	23	100 100		11.3	116.3				PI, PA
2968.00	16				16	11 12						PP = > 4.5			
	17				Bulk										
2966.00	18														
	19		Poorly graded SAND (SP); medium dense; reddish brown; moist; mostly fine to medium with trace coarse SAND [FILL].			14	41	100		6.2	122.7				
2964.00	20				20	24 17									C
	21														
2962.00	22														
	23														
2960.00	24		Poorly graded SAND (SP); loose; mottled reddish brown and olive brown; mostly fine to medium with trace coarse				18	100		6.5	115.7				
	25														

(continued)

GEOCON WEST, INC.
Geocon West, Inc.
3303 North San Fernando Blvd, Suite 100
Burbank CA 91504
Telephone: 818-841-8388
Fax: 818-841-1704

PROJECT OR BRIDGE NAME
Bear Valley Road overhead at BNSF Railroad

PROJECT NO.
A90720601

DATE

HOLE ID
A-14-003

GEOCON WEST 5BR-STANDARD A9072-06-01 BEAR VALLEY ROAD BORINGS.GPJ CALTRANS LIBRARY DEC09-UNLOCK 2.GLB 2/16/15

ELEVATION (ft)	DEPTH (ft)	Material Graphics	DESCRIPTION	Sample Location	Sample Number	Blows per 6 in.	Blows per foot	Recovery (%)	RQD (%)	Moisture Content (%)	Dry Unit Weight (pcf)	Shear Strength (tsf)	Drilling Method	Casing Depth	Remarks
	25		SAND [ALLUVIUM].		25	9					115.7				
2958.00	26		Poorly graded SAND (SP) *(continued)*.			8 10									
	27														
2956.00	28														
	29		Reddish brown; mostly fine with some medium SAND.			9	17	100		5.6	115.2				
2954.00	30				30	8 9									
	31														
2952.00	32														
	33														
2950.00	34		Medium dense; pale brown; mostly fine SAND.			13	55	100		3.8	102.0				
	35				35	19 36									
2948.00	36														
	37														
2946.00	38														
	39					50 for 4"		17		2.0	98.4				
2944.00	40		Dense.		40										
	41		Bottom of borehole at 40.5 ft bgs												
2942.00	42		Borehole terminated at planned depth.												
	43		This Boring Record was developed in accordance with the Caltrans Soil & Rock Logging, Classification, and Presentation Manual (2010) except as noted on the Soil or Rock Legend or below.												
2940.00	44														
	45														
2938.00	46														
	47														
2936.00	48														
	49														
2934.00	50														
	51														
2932.00	52														
	53														
2930.00	54														
	55														

GEOCON WEST 5BR-STANDARD A9072-06-01 BEAR VALLEY ROAD BORINGS.GPJ CALTRANS LIBRARY DEC09-UNLOCK 2.GLB 2/16/15

GEOCON WEST, INC.

Geocon West, Inc.
3303 North San Fernando Blvd, Suite 100
Burbank CA 91504
Telephone: 818-841-8388
Fax: 818-841-1704

PROJECT OR BRIDGE NAME
Bear Valley Road overhead at BNSF Railroad

PROJECT NO.
A90720601

DATE

HOLE ID
A-14-003

SHEET
2 of 2

LOGGED BY	BEGIN DATE	COMPLETION DATE	BOREHOLE LOCATION (Lat/Long or North/East and Datum)	HOLE ID
RP	11-20-14	11-20-14		A-14-004
DRILLING CONTRACTOR			BOREHOLE LOCATION (Offset, Station, Line)	SURFACE ELEVATION
Cascade			62.50' Rt Sta 35+24 Bear Valley Rd. C	2978.0 ft
DRILLING METHOD			DRILL RIG	BOREHOLE DIAMETER
Hollow-Stem Auger			CME 75 Track	8 in
SAMPLER TYPE(S) AND SIZE(S) (ID)			SPT HAMMER TYPE	HAMMER EFFICIENCY, ERi
Bulk, Std Cal (2.5")			Automatic 140 lb 30" drop	68%
BOREHOLE BACKFILL AND COMPLETION			GROUNDWATER READINGS DURING DRILLING AFTER DRILLING (DATE)	TOTAL DEPTH OF BORING
Soil Cuttings			No Groundwater Encountered	35.5 ft

ELEVATION (ft)	DEPTH (ft)	DESCRIPTION	Sample Location	Sample Number	Blows per 6 in.	Blows per foot	Recovery (%)	RQD (%)	Moisture Content (%)	Dry Unit Weight (pcf)	Shear Strength (tsf)	Drilling Method	Casing Depth	Remarks
	0	AGGREGATE BASE.		Bulk			100							
	1	SILTY SAND (SM); loose; brown; dry to moist; trace fine GRAVEL; mostly fine with some medium to coarse SAND [FILL].												
2976.00	2													
	3	Poorly graded SAND (SP); loose; reddish brown; moist; mostly fine with some coarse SAND [FILL].			10	25	100		3.6	108.9				
2974.00	4			4	11 14		100							
	5			Bulk										
2972.00	6	Trace fine GRAVEL.			10	27	100		4.6	107.1				
	7			7	11 16									
2970.00	8													
	9	Medium dense.			11	31	100		6.1	112.6				
2968.00	10			10	17 14									
	11													
2966.00	12													
	13													
2964.00	14	SILTY SAND (SM); loose; brown to olive brown; mostly fine to medium SAND [FILL].			7	16	100		4.6	115.1				
	15			15	7 9									
2962.00	16													
	17													
2960.00	18													
	19				4	15	100		4.8	109.4				
2958.00	20			20	5 10									
	21													
2956.00	22													
	23													
2954.00	24	Poorly graded SAND (SP); loose; reddish brown; moist; trace fine GRAVEL; mostly fine with some medium and				22	100		5.7	106.4				
	25													

(continued)

GEOCON WEST, INC.
Geocon West, Inc.
3303 North San Fernando Blvd, Suite 100
Burbank CA 91504
Telephone: 818-841-8388
Fax: 818-841-1704

PROJECT OR BRIDGE NAME
Bear Valley Road overhead at BNSF Railroad

PROJECT NO.
A90720601

DATE

HOLE ID
A-14-004

GEOCON WEST 5BR-STANDARD A9072-06-01 BEAR VALLEY ROAD BORINGS.GPJ CALTRANS LIBRARY DEC09-UNLOCK 2.GLB 2/16/15

ELEVATION (ft)	DEPTH (ft)	Material Graphics	DESCRIPTION	Sample Location	Sample Number	Blows per 6 in.	Blows per foot	Recovery (%)	RQD (%)	Moisture Content (%)	Dry Unit Weight (pcf)	Shear Strength (tsf)	Drilling Method	Casing Depth	Remarks
	25		trace coarse SAND [ALLUVIUM]. Poorly graded SAND (SP) *(continued)*.		25	6 8 14					106.4				
2952.00	26														
	27														
2950.00	28														
	29		Medium dense; reddish brown to pale brown; trace fine GRAVEL; mostly fine to medium SAND; trace SILT.			15 20 28	48	100		4.4	104.7				
2948.00	30				30										
	31														
2946.00	32														
	33														
2944.00	34					17 21 28	49	100		0.9	103.8				
	35				35										
2942.00	36		Bottom of borehole at 35.5 ft bgs												
	37		Borehole terminated at planned depth.												
2940.00	38		This Boring Record was developed in accordance with the Caltrans Soil & Rock Logging, Classification, and Presentation Manual (2010) except as noted on the Soil or Rock Legend or below.												
	39														
2938.00	40														
	41														
2936.00	42														
	43														
2934.00	44														
	45														
2932.00	46														
	47														
2930.00	48														
	49														
2928.00	50														
	51														
2926.00	52														
	53														
2924.00	54														
	55														

GEOCON WEST 5BR-STANDARD A9072-06-01 BEAR VALLEY ROAD BORINGS.GPJ CALTRANS LIBRARY DEC09-UNLOCK 2.GLB 2/16/15

GEOCON WEST, INC.

Geocon West, Inc.
3303 North San Fernando Blvd, Suite 100
Burbank CA 91504
Telephone: 818-841-8388
Fax: 818-841-1704

PROJECT OR BRIDGE NAME
Bear Valley Road overhead at BNSF Railroad

PROJECT NO.
A90720601

DATE

HOLE ID
A-14-004

SHEET
2 of 2

LOGGED BY	BEGIN DATE	COMPLETION DATE	BOREHOLE LOCATION (Lat/Long or North/East and Datum)	HOLE ID
RP	11-19-14	11-19-14		A-14-005
DRILLING CONTRACTOR			BOREHOLE LOCATION (Offset, Station, Line)	SURFACE ELEVATION
Cascade			69.50' Rt Sta 29+38 Bear Valley Rd. C	2964.0 ft
DRILLING METHOD			DRILL RIG	BOREHOLE DIAMETER
Hollow-Stem Auger			CME 75	8 in
SAMPLER TYPE(S) AND SIZE(S) (ID)			SPT HAMMER TYPE	HAMMER EFFICIENCY, ERi
Bulk, Std Cal (2.5")			Automatic 140 lb 30" drop	60% (Assumed)
BOREHOLE BACKFILL AND COMPLETION			GROUNDWATER READINGS DURING DRILLING / AFTER DRILLING (DATE)	TOTAL DEPTH OF BORING
Soil Cuttings			No Groundwater Encountered	50.5 ft

ELEVATION (ft)	DEPTH (ft)	DESCRIPTION	Sample Location	Sample Number	Blows per 6 in.	Blows per foot	Recovery (%)	RQD (%)	Moisture Content (%)	Dry Unit Weight (pcf)	Shear Strength (tsf)	Drilling Method	Casing Depth	Remarks
	0	SILTY SAND (SM); loose to medium dense; reddish brown; dry to moist; trace fine GRAVEL; mostly fine to medium with trace coarse SAND [FILL].		Bulk			100							
	1													
2962.00	2				7 7 5	12	100		13.3	103.6				
	3	Medium dense.		3										EI, CR
2960.00	4													
	5	SANDY SILT (ML); very stiff; variegated olive brown and reddish brown; moist; trace fine GRAVEL; some fine and trace coarse SAND [FILL].			3 3 6	9	100		17.8	94.1				
2958.00	6			6							PP = 3.6			DS, C
	7													
2956.00	8	SANDY SILT (ML); very stiff; chaotic pale olive brown and olive brown; moist; some fine SAND; medium plasticity fines; trace oxidation [ALLUVIUM].			7 16 28	44	100 100		26.3	95.7				PA
	9			9							PP = > 4.5			DS, C
2954.00	10			Bulk										
	11				7 9 14	23	100		23.8	97.4				
2952.00	12			12							PP = 4.0			C
	13													
2950.00	14	Poorly graded SAND (SP); dense; pale reddish brown; moist; mostly fine to medium with little coarse SAND; trace SILT.			12 17 26	43	100		10.1	114.8				
	15			15										
2948.00	16													
	17	Well-graded SAND (SW); medium dense; pale brown; moist; trace fine GRAVEL.			9 11 17	28	100		3.6	102.8				
2946.00	18			18										
	19													
2944.00	20				12 17 23	40	100		0.8	104.0				
	21	Dense.		21										
2942.00	22													
	23													
2940.00	24	Very dense.				65	100		1.7	105.0				
	25													

(continued)

GEOCON WEST, INC.
Geocon West, Inc.
3303 North San Fernando Blvd, Suite 100
Burbank CA 91504
Telephone: 818-841-8388
Fax: 818-841-1704

PROJECT OR BRIDGE NAME
Bear Valley Road overhead at BNSF Railroad

PROJECT NO.
A90720601

DATE

HOLE ID
A-14-005

GEOCON WEST 5BR-STANDARD A9072-06-01 BEAR VALLEY ROAD BORINGS.GPJ CALTRANS LIBRARY DEC09-UNLOCK 2.GLB 2/16/15

ELEVATION (ft)	DEPTH (ft)	Material Graphics	DESCRIPTION	Sample Location	Sample Number	Blows per 6 in.	Blows per foot	Recovery (%)	RQD (%)	Moisture Content (%)	Dry Unit Weight (pcf)	Shear Strength (tsf)	Drilling Method	Casing Depth	Remarks
	25		Well-graded SAND (SW) *(continued)*.		25	12 29 36					105.0				PA
2938.00	26														
	27														
2936.00	28														
	29					15 36 40	76	100		2.6	112.7				
2934.00	30				30										
	31														
2932.00	32														
	33														
2930.00	34		SANDY SILT (ML); very stiff; olive brown; moist; trace coarse to fine GRAVEL; some medium to fine SAND; nonplastic fines [ALLUVIUM].			33 50 for 3"		100		10.8	98.8				
	35				35							PP = 2.7			CP, PI
2928.00	36														
	37														
2926.00	38														
	39		SILTY SAND (SM); very dense; brown; moist; mostly fine to medium with trace coarse SAND.			13 50 for 6"		100		12.2	116.7				
2924.00	40				40										
	41														
2922.00	42														
	43														
2920.00	44					11 22 44	66	100		14.8	109.5				
	45		Increase in SILT content.		45										
2918.00	46														
	47														
2916.00	48														
	49					8 11 19	30	100		27.3	93.6				
2914.00	50		SANDY SILT (ML); very stiff; brown to reddish brown; low plasticity fines.		50							PP = 3.7			
	51		Bottom of borehole at 50.5 ft bgs												
2912.00	52		Borehole terminated at planned depth.												
	53		This Boring Record was developed in accordance with the Caltrans Soil & Rock Logging, Classification, and Presentation Manual (2010) except as noted on the Soil or Rock Legend or below.												
2910.00	54														
	55														

GEOCON WEST, INC.

Geocon West, Inc.
3303 North San Fernando Blvd, Suite 100
Burbank CA 91504
Telephone: 818-841-8388
Fax: 818-841-1704

PROJECT OR BRIDGE NAME
Bear Valley Road overhead at BNSF Railroad

PROJECT NO.
A90720601

DATE

HOLE ID
A-14-005

SHEET
2 of 2

GEOCON WEST 5BR-STANDARD A9072-06-01 BEAR VALLEY ROAD BORINGS.GPJ CALTRANS LIBRARY DEC09-UNLOCK 2.GLB 2/16/15

LOGGED BY	BEGIN DATE	COMPLETION DATE	BOREHOLE LOCATION (Lat/Long or North/East and Datum)	HOLE ID
RP	11-19-14	11-19-14		A-14-006
DRILLING CONTRACTOR			BOREHOLE LOCATION (Offset, Station, Line)	SURFACE ELEVATION
Cascade			74.50' Lt Sta 29+24 Bear Valley Rd. C	2962.0 ft
DRILLING METHOD			DRILL RIG	BOREHOLE DIAMETER
Hollow-Stem Auger			CME 75	8 in
SAMPLER TYPE(S) AND SIZE(S) (ID)			SPT HAMMER TYPE	HAMMER EFFICIENCY, ERi
Bulk, Std Cal (2.5"), SPT (1.4")			Automatic 140 lb 30" drop	60% (Assumed)
BOREHOLE BACKFILL AND COMPLETION			GROUNDWATER READINGS DURING DRILLING AFTER DRILLING (DATE)	TOTAL DEPTH OF BORING
Soil Cuttings			No Groundwater Encountered	50.5 ft

ELEVATION (ft)	DEPTH (ft)	DESCRIPTION	Sample Location	Sample Number	Blows per 6 in.	Blows per foot	Recovery (%)	RQD (%)	Moisture Content (%)	Dry Unit Weight (pcf)	Shear Strength (tsf)	Drilling Method	Casing Depth	Remarks
	0	SILTY SAND (SM); loose; olive brown to reddish brown; moist; trace fine GRAVEL; mostly fine to medium SAND [FILL].		Bulk			100							CP, CR
2960.00	2	Medium dense; brown; trace carbon deposit staining.		2.5	13 11 11	22	100		7.4	114.0				
2958.00	4				2 3 3	6	100		6.1					
	5	Loose.		5										
2956.00	6													
	7	Some carbon deposits.		7.5	3 3 4	7	100		8.0	107.6				DS, C
2954.00	8													
	9	Poorly graded SAND (SP); loose; strong brown; moist; trace fine GRAVEL; mostly fine with some medium SAND [ALLUVIUM].		10	2 3 3	6	100		5.9					
2952.00	10													
2950.00	12	Medium dense; reddish brown.		12.5	10 11 15	26	100		11.2	111.8				
2948.00	14	Trace coarse SAND.		15	7 9 10	19	100		2.9					
2946.00	16													
	17	Well-graded SAND (SW); dense; very pale brown; moist; trace fine GRAVEL [ALLUVIUM].		17.5	10 15 24	39	100		2.7	106.6				
2944.00	18													
	19	Lean CLAY (CL); very stiff; olive brown; moist; low plasticity fines [ALLUVIUM].		20	15 13 11	24	100		9.3					PI
	21													
2940.00	22	Poorly graded SAND (SP); very dense; very pale brown; moist; trace fine GRAVEL; mostly medium with some coarse and little fine SAND [ALLUVIUM].		22.5	19 26 36	62	100		4.3	108.2				
2938.00	24	Pale brown; mostly fine to medium SAND.					100		1.1					
	25													

(continued)

GEOCON WEST, INC.
Geocon West, Inc.
3303 North San Fernando Blvd, Suite 100
Burbank CA 91504
Telephone: 818-841-8388
Fax: 818-841-1704

PROJECT OR BRIDGE NAME
Bear Valley Road overhead at BNSF Railroad

PROJECT NO.
A90720601

DATE

HOLE ID
A-14-006

GEOCON WEST 5BR-STANDARD A9072-06-01 BEAR VALLEY ROAD BORINGS.GPJ CALTRANS LIBRARY DEC09-UNLOCK 2.GLB 2/16/15

ELEVATION (ft)	DEPTH (ft)	Material Graphics	DESCRIPTION	Sample Location	Sample Number	Blows per 6 in.	Blows per foot	Recovery (%)	RQD (%)	Moisture Content (%)	Dry Unit Weight (pcf)	Shear Strength (tsf)	Drilling Method	Casing Depth	Remarks
	25		Poorly graded SAND (SP) *(continued)*.		25	16 40 50 for 4"									
2936.00	26														
	27				27.5	14 25 32	57	100		2.4	107.2				
2934.00	28														
	29		Varigated olive brown, pale brown and reddish brown; mostly fine with little coarse SAND.		30	21 44 46	90	100		1.9					
2932.00	30														
	31														
2930.00	32				32.5	9 27 40	67	100		1.5	111.0				
	33														
2928.00	34														
	35		Pink to reddish brown; mostly fine to medium SAND. SANDY SILT (ML); hard; olive brown; moist; fine SAND; trace oxidation [ALLUVIUM].		35	18 16 15	31	100		12.2					PI
2926.00	36														
	37				37.5	10 18 50 for 5"		100		19.1	109.0	PP = > 4.5			
2924.00	38		SANDY lean CLAY (CL); hard; mottled grayish brown and brown; moist; medium SAND; medium plasticity fines [ALLUVIUM].												
	39		Poorly graded SAND (SP); very dense; olive brown; moist; fine with some medium SAND [ALLUVIUM].		40	11 22 30	52	100		5.4					
2922.00	40														
	41														
2920.00	42		SILTY SAND (SM); very dense; olive brown; moist; mostly fine SAND; trace carbon deposits [ALLUVIUM].		42.5	18 33 36	69	100		6.5	113.0				
	43														
2918.00	44														
	45		Poorly graded SAND with SILT (SP-SM); medium dense; olive brown; moist; mostly fine SAND [ALLUVIUM].		45	8 11 17	28	100		6.8					
2916.00	46														
	47		SILTY SAND (SM); dense; olive brown; moist; mostly fine SAND [ALLUVIUM].		47.5	13 21 26	47	100		14.2	100.7				
2914.00	48		Poorly graded SAND (SP); dense; olive brown; moist; mostly fine SAND [ALLUVIUM].												
	49														
2912.00	50		Lean CLAY (CL); stiff; brown; moist; low plasticity fines [ALLUVIUM].		50	4 6 8	14	100		23.1					
	51		Bottom of borehole at 50.5 ft bgs												
2910.00	52		Borehole terminated at planned depth.												
	53		This Boring Record was developed in accordance with the Caltrans Soil & Rock Logging, Classification, and Presentation Manual (2010) except as noted on the Soil or Rock Legend or below.												
2908.00	54														
	55														

GEOCON WEST, INC.

Geocon West, Inc.
3303 North San Fernando Blvd, Suite 100
Burbank CA 91504
Telephone: 818-841-8388
Fax: 818-841-1704

PROJECT OR BRIDGE NAME
Bear Valley Road overhead at BNSF Railroad

PROJECT NO.
A90720601

DATE

HOLE ID
A-14-006

SHEET
2 of 2

GEOCON WEST 5BR-STANDARD A9072-06-01 BEAR VALLEY ROAD BORINGS.GPJ CALTRANS LIBRARY DEC09-UNLOCK 2.GLB 2/16/15

LOGGED BY	BEGIN DATE	COMPLETION DATE	BOREHOLE LOCATION (Lat/Long or North/East and Datum)	HOLE ID
RP	11-18-14	11-18-14		A-14-007
DRILLING CONTRACTOR			BOREHOLE LOCATION (Offset, Station, Line)	SURFACE ELEVATION
Cascade			70.00' Rt Sta 29+92 Bear Valley Rd. C	2964.0 ft
DRILLING METHOD			DRILL RIG	BOREHOLE DIAMETER
Hollow-Stem Auger			CME 75	8 in
SAMPLER TYPE(S) AND SIZE(S) (ID)			SPT HAMMER TYPE	HAMMER EFFICIENCY, ERi
Bulk, Std Cal (2.5"), SPT (1.4")			Automatic 140 lb 30" drop	60% (Assumed)
BOREHOLE BACKFILL AND COMPLETION			GROUNDWATER READINGS DURING DRILLING AFTER DRILLING (DATE)	TOTAL DEPTH OF BORING
Soil Cuttings			No Groundwater Encountered	50.5 ft

ELEVATION (ft)	DEPTH (ft)	DESCRIPTION	Sample Location	Sample Number	Blows per 6 in.	Blows per foot	Recovery (%)	RQD (%)	Moisture Content (%)	Dry Unit Weight (pcf)	Shear Strength (tsf)	Drilling Method	Casing Depth	Remarks
	0	SILTY SAND (SM); loose to medium dense; brown; moist; trace fine GRAVEL; mostly fine to medium with some coarse SAND [FILL].		Bulk			100							PA
2962.00	2			2.5	6 5 5	10	100		6.3					
	3	Well-graded SAND (SW); loose; brown; moist [FILL].												
2960.00	4				4 4 4	8	100		4.2	100.4				
	5	Dark olive brown.		5										DS
2958.00	6													
	7			7.5	3 2 3	5	100		14.6					
2956.00	8													
	9	SANDY lean CLAY (CL); hard; grayish brown and brown; moist; little fine SAND; low plasticity fines [ALLUVIUM].			9 14 17	31	100		14.7	109.6				
2954.00	10			10							PP = >4.5			DS, C
	11													
2952.00	12	Lean CLAY (CL); stiff; mottled olive brown and reddish brown; moist; trace oxidation staining [ALLUVIUM].		12.5	4 6 9	15	100		20.5					PI
	13													
2950.00	14	Poorly graded SAND (SP); very dense; mottled reddish brown, yellowish brown, and pale brown; moist; trace fine GRAVEL; mostly fine with trace coarse SAND [ALLUVIUM].			14 27 26	53	100		5.2	118.5				
	15			15										C
2948.00	16													
	17			17.5	11 14 14	28	100		4.5					
2946.00	18	Poorly graded SAND (SP); very loose; pale brown; moist; fine to medium grained SAND [ALLUVIUM].												
	19				22 31 25	56	100		1.8	112.3				
2944.00	20			20										C
	21													
2942.00	22			22.5	16 16 14	30	100		2.6					
	23													
2940.00	24	Trace fine GRAVEL; mostly medium with some fine and coarse SAND.				58	100		1.5	114.5				
	25													

(continued)

GEOCON WEST, INC.
Geocon West, Inc.
3303 North San Fernando Blvd, Suite 100
Burbank CA 91504
Telephone: 818-841-8388
Fax: 818-841-1704

PROJECT OR BRIDGE NAME
Bear Valley Road overhead at BNSF Railroad

PROJECT NO.
A90720601

DATE

HOLE ID
A-14-007

GEOCON WEST 5BR-STANDARD A9072-06-01 BEAR VALLEY ROAD BORINGS.GPJ CALTRANS LIBRARY DEC09-UNLOCK 2.GLB 2/16/15

ELEVATION (ft)	DEPTH (ft)	Material Graphics	DESCRIPTION	Sample Location	Sample Number	Blows per 6 in.	Blows per foot	Recovery (%)	RQD (%)	Moisture Content (%)	Dry Unit Weight (pcf)	Shear Strength (tsf)	Drilling Method	Casing Depth	Remarks
	25		Poorly graded SAND (SP) *(continued)*.		25	24					114.5				C
2938.00	26					26 32									
	27		Mostly fine SAND.		27.5	17 23 28	51	100		2.0					
2936.00	28														
	29					23 38	80	100		1.2	112.9				
2934.00	30		Trace coarse GRAVEL.		30	42									C
	31														
2932.00	32														
	33				32.5										
2930.00	34					30 36	89	100		1.7	113.7				
	35		Mostly medium to coarse with some fine SAND.		35	53									
2928.00	36														
	37				37.5	60 for 6"		100		2.0					
2926.00	38														
	39		SILTY SAND (SM); very dense; olive brown; moist; mostly fine with some medium SAND.			41 60		100		8.9	101.0				
2924.00	40				40										
	41														
2922.00	42				42.5	21 32 21	53	100		6.8					
	43		Poorly graded SAND (SP); very dense; pale brown; moist; fine to medium SAND.												
2920.00	44		SANDY SILT (ML); very stiff to hard; yellowish brown; moist; low plasticity fines; fine SAND.			12 20	44	100		13.4	100.9				
	45				45	24						PP = 3.8			
2918.00	46														
	47				47.5	11 15 17	32	100		20.9					
2916.00	48		Olive brown.												
	49		SILTY SAND (SM); very dense; reddish brown; moist; fine SAND; trace carbon deposits.			13 3		100		10.4	120.9				
2914.00	50				50	50 for 4"									
	51		Bottom of borehole at 50.5 ft bgs												
2912.00	52		Borehole terminated at planned depth.												
	53		This Boring Record was developed in accordance with the Caltrans Soil & Rock Logging, Classification, and Presentation Manual (2010) except as noted on the Soil or Rock Legend or below.												
2910.00	54														
	55														

GEOCON WEST, INC.

Geocon West, Inc.
3303 North San Fernando Blvd, Suite 100
Burbank CA 91504
Telephone: 818-841-8388
Fax: 818-841-1704

PROJECT OR BRIDGE NAME
Bear Valley Road overhead at BNSF Railroad

PROJECT NO.
A90720601

DATE

HOLE ID
A-14-007

SHEET
2 of 2

GEOCON WEST 5BR-STANDARD A9072-06-01 BEAR VALLEY ROAD BORINGS.GPJ CALTRANS LIBRARY DEC09-UNLOCK 2.GLB 2/16/15

LOGGED BY	BEGIN DATE	COMPLETION DATE	BOREHOLE LOCATION (Lat/Long or North/East and Datum)	HOLE ID
RP	11-18-14	11-19-14		A-14-008
DRILLING CONTRACTOR			BOREHOLE LOCATION (Offset, Station, Line)	SURFACE ELEVATION
Cascade			74.50' Lt Sta 29+78 Bear Valley Rd. C	2961.0 ft
DRILLING METHOD			DRILL RIG	BOREHOLE DIAMETER
Hollow-Stem Auger			CME 75	8 in
SAMPLER TYPE(S) AND SIZE(S) (ID)			SPT HAMMER TYPE	HAMMER EFFICIENCY, ERi
Bulk, Std Cal (2.5")			Automatic 140 lb 30" drop	60% (Assumed)
BOREHOLE BACKFILL AND COMPLETION			GROUNDWATER READINGS DURING DRILLING AFTER DRILLING (DATE)	TOTAL DEPTH OF BORING
Soil Cuttings			No Groundwater Encountered	50.5 ft

ELEVATION (ft)	DEPTH (ft)	DESCRIPTION	Sample Location	Sample Number	Blows per 6 in.	Blows per foot	Recovery (%)	RQD (%)	Moisture Content (%)	Dry Unit Weight (pcf)	Shear Strength (tsf)	Drilling Method	Casing Depth	Remarks
	0	SILTY SAND (SM); loose; brown; dry to moist; trace fine GRAVEL; mostly fine to medium with trace coarse SAND [FILL].												
2959.00	2													
	3				3 4 4	8	100		4.4	109.3				
2957.00	4	Mostly fine with little coarse and trace medium SAND.		4										C
	5			Bulk			100							PA
2955.00	6	Well-graded SAND (SW); loose; reddish brown; moist; little fine GRAVEL [ALLUVIUM].			3 3 3	6	100		12.0	107.5				
	7			7										C
2953.00	8													
	9	Poorly graded SAND (SP); loose; reddish brown; moist; mostly fine to medium with little coarse SAND [ALLUVIUM].			2 3 3	6	100		4.4	105.9				
2951.00	10			10										C
	11													
2949.00	12	Medium dense; trace coarse GRAVEL.			8 10 12	22	100		5.0	110.6				
	13			13										
2947.00	14													
	15				6 10 14	24	100		3.7	101.0				
2945.00	16	Trace fine GRAVEL.		16										C
	17													
2943.00	18				14 11 5	16	100		2.2	104.1				
	19	Trace coarse GRAVEL.		19							PP = 2.0			C
2941.00	20	Lean CLAY (CL); stiff to very stiff; olive brown; moist; slightly oxidized [ALLUVIUM].												
	21													
2939.00	22													
	23													
2937.00	24	Well-graded SAND (SW); very dense; pale brown; moist; trace coarse GRAVEL; trace SILT [ALLUVIUM].				57	100		2.5	109.6				
	25													

(continued)

GEOCON WEST, INC.
Geocon West, Inc.
3303 North San Fernando Blvd, Suite 100
Burbank CA 91504
Telephone: 818-841-8388
Fax: 818-841-1704

PROJECT OR BRIDGE NAME
Bear Valley Road overhead at BNSF Railroad

PROJECT NO.
A90720601

DATE

HOLE ID
A-14-008

GEOCON WEST 5BR-STANDARD A9072-06-01 BEAR VALLEY ROAD BORINGS.GPJ CALTRANS LIBRARY DEC09-UNLOCK 2.GLB 2/16/15

ELEVATION (ft)	DEPTH (ft)	DESCRIPTION	Sample Location	Sample Number	Blows per 6 in.	Blows per foot	Recovery (%)	RQD (%)	Moisture Content (%)	Dry Unit Weight (pcf)	Shear Strength (tsf)	Drilling Method	Casing Depth	Remarks
	25	Well-graded SAND (SW) *(continued)*.		25	8 27 30					109.6				C
2935.00	26													
	27													
2933.00	28													
	29	Poorly graded SAND (SP); very dense; pale brown; moist; mostly fine to medium with some coarse SAND [ALLUVIUM].			20 30 37	67	100		3.0	109.7				
2931.00	30			30										
	31													
2929.00	32													
	33													
2927.00	34	Poorly graded SAND (SP); dense; mottled olive brown and reddish brown; moist; mostly fine with trace coarse SAND; trace SILT [ALLUVIUM].			21 18 31	49	100		21.9	102.7				
	35			35										
2925.00	36	Reddish brown; increase in SILT content.												
	37													
2923.00	38													
	39				11 21 38	59	100		8.7	118.8				
2921.00	40	Very dense; mottled pale brown, reddish brown, and olive brown; mostly fine with some medium and trace coarse SAND.												
	41													
2919.00	42													
	43													
2917.00	44	SANDY SILT (ML); hard; dark yellowish brown; moist; fine SAND; nonplastic to low plasticity fines [ALLUVIUM].			10 27 32	59	100		13.6	110.4				
	45			45							PP = >4.5			
2915.00	46													
	47													
2913.00	48													
	49				7 20 31	51	100		17.1	107.8				
2911.00	50	Low plasticity fines; trace variegated carbon deposits.		50							PP = >4.5			
	51	Bottom of borehole at 50.5 ft bgs												
2909.00	52	Borehole terminated at planned depth.												
	53	This Boring Record was developed in accordance with the Caltrans Soil & Rock Logging, Classification, and Presentation Manual (2010) except as noted on the Soil or Rock Legend or below.												
2907.00	54													
	55													

GEOCON WEST, INC.

Geocon West, Inc.
3303 North San Fernando Blvd, Suite 100
Burbank CA 91504
Telephone: 818-841-8388
Fax: 818-841-1704

PROJECT OR BRIDGE NAME
Bear Valley Road overhead at BNSF Railroad

PROJECT NO.
A90720601

DATE

HOLE ID
A-14-008

SHEET
2 of 2

GEOCON WEST 5BR-STANDARD A9072-06-01 BEAR VALLEY ROAD BORINGS.GPJ CALTRANS LIBRARY DEC09-UNLOCK 2.GLB 2/16/15

APPENDIX B

APPENDIX B

LABORATORY TESTING

Laboratory tests were performed in accordance with California Test Methods or generally accepted test methods of the American Society for Testing and Materials (ASTM). The types of tests performed are listed below:

- In-Place Dry Density and Moisture Content: ASTM D2937 (CTM 226)
- Direct Shear Strength: ASTM D 3080
- Consolidation: ASTM D 2435
- Atterberg Limits: ASTM D 4318
- Grain Size Distribution: ASTM D 422
- Compaction Curve: D 1557
- R-value: CTM 301
- pH and Resistivity: CTM 643
- Sulfate Content: CTM 417
- Chloride Content: CTM 422

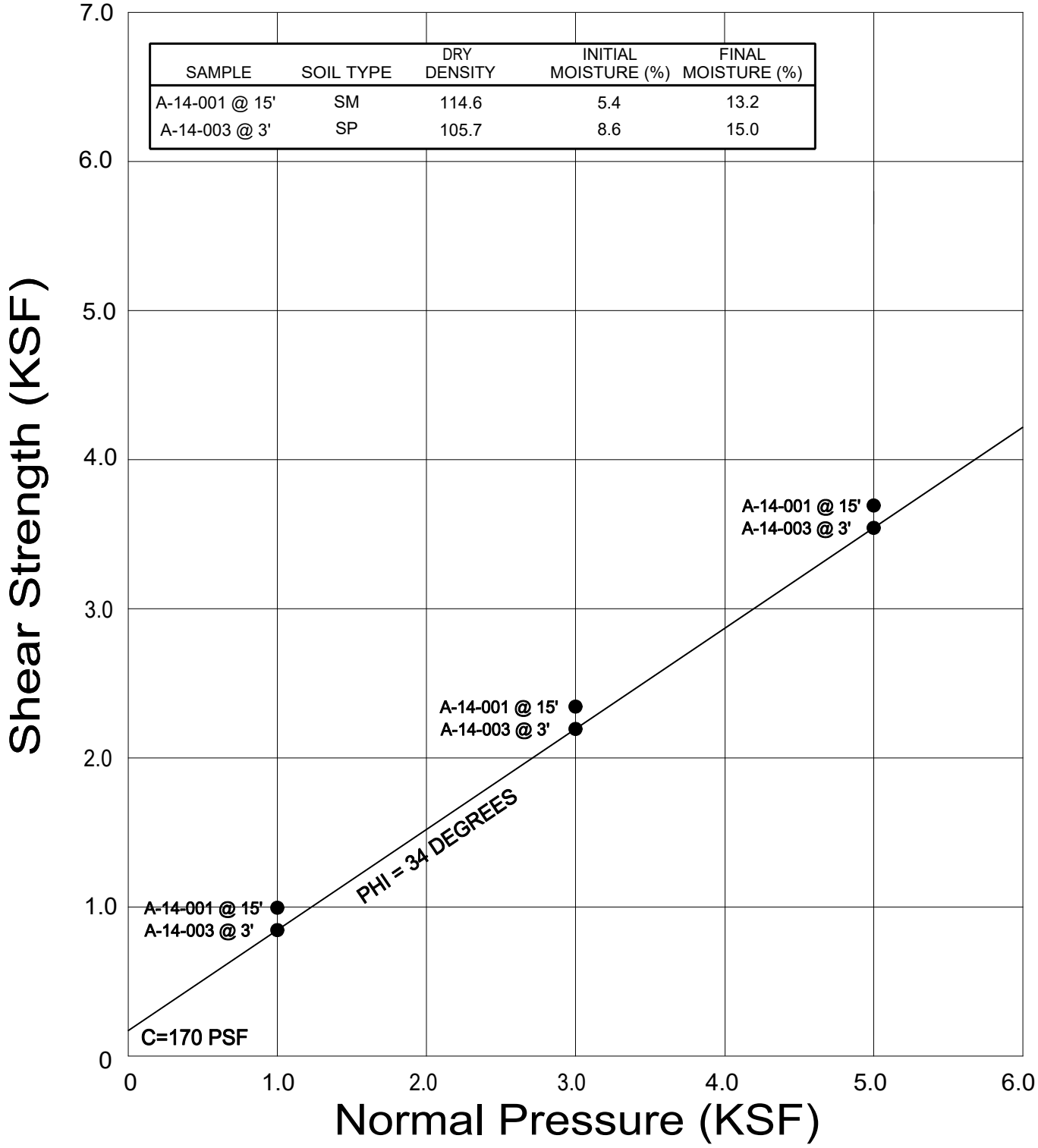

SAMPLE	SOIL TYPE	DRY DENSITY	INITIAL MOISTURE (%)	FINAL MOISTURE (%)
A-14-001 @ 15'	SM	114.6	5.4	13.2
A-14-003 @ 3'	SP	105.7	8.6	15.0

● Direct Shear, Saturated

GEOCON WEST, INC.
ENVIRONMENTAL GEOTECHNICAL MATERIALS
3303 N. SAN FERNANDO BLVD. - SUITE 100 - BURBANK, CA 91504
PHONE (818) 841-8388 - FAX (818) 841-1704

DIRECT SHEAR TEST RESULTS

BEAR VALLEY ROAD OVERHEAD
AT BNSF RAILROAD
CITYOF VICTORVILLE, CALIFORNIA

Drafted by: JTA	Checked by: NDB	FEB 2017	PROJECT NO. A9072-06-01	FIG. B1

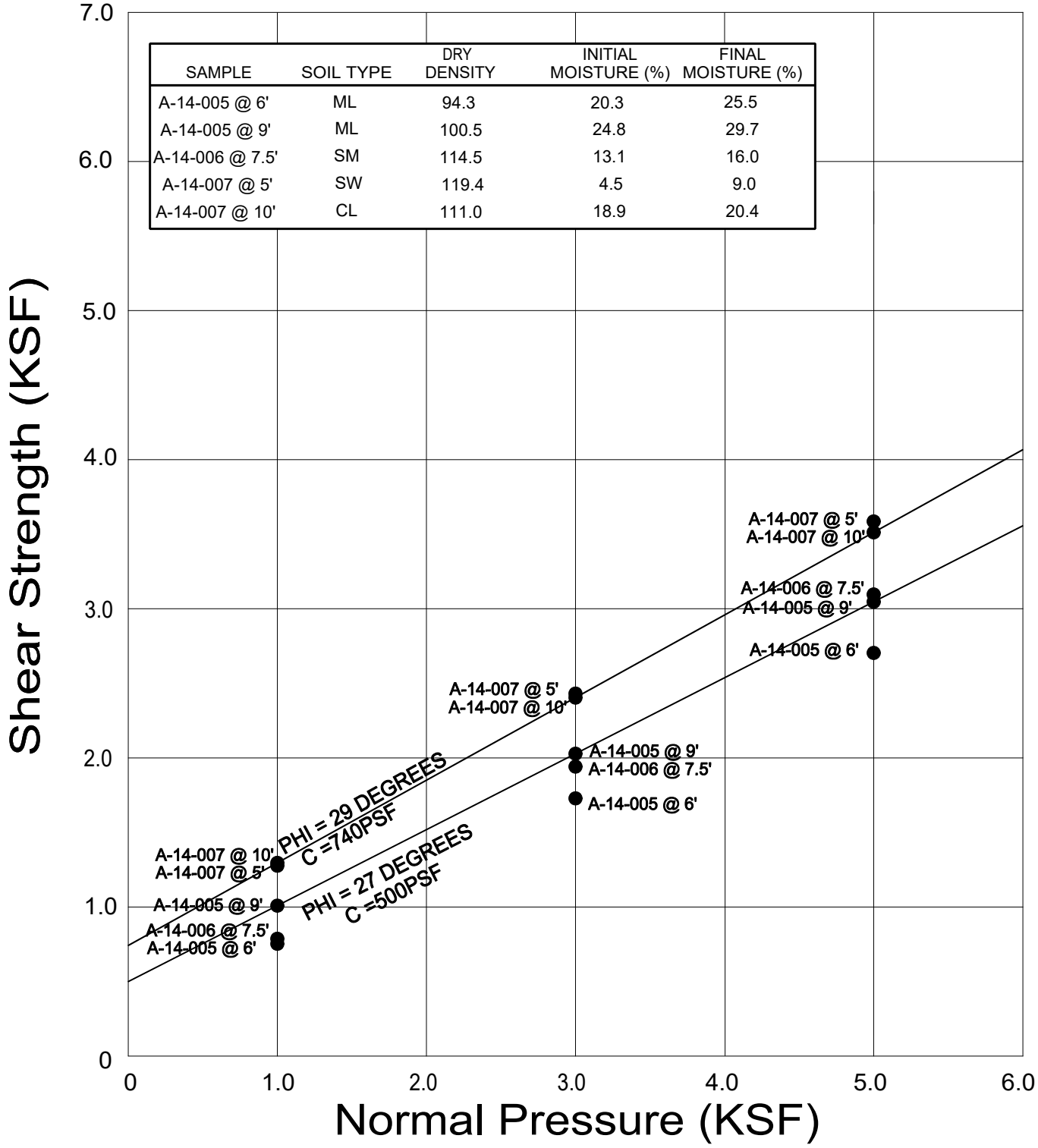

SAMPLE	SOIL TYPE	DRY DENSITY	INITIAL MOISTURE (%)	FINAL MOISTURE (%)
A-14-005 @ 6'	ML	94.3	20.3	25.5
A-14-005 @ 9'	ML	100.5	24.8	29.7
A-14-006 @ 7.5'	SM	114.5	13.1	16.0
A-14-007 @ 5'	SW	119.4	4.5	9.0
A-14-007 @ 10'	CL	111.0	18.9	20.4

GEOCON WEST, INC.
ENVIRONMENTAL GEOTECHNICAL MATERIALS
3303 N. SAN FERNANDO BLVD. - SUITE 100 - BURBANK, CA 91504
PHONE (818) 841-8388 - FAX (818) 841-1704

DIRECT SHEAR TEST RESULTS

BEAR VALLEY ROAD OVERHEAD
AT BNSF RAILROAD
CITYOF VICTORVILLE, CALIFORNIA

Drafted by: JTA	Checked by: NDB	FEB 2017	PROJECT NO. A9072-06-01	FIG. B2

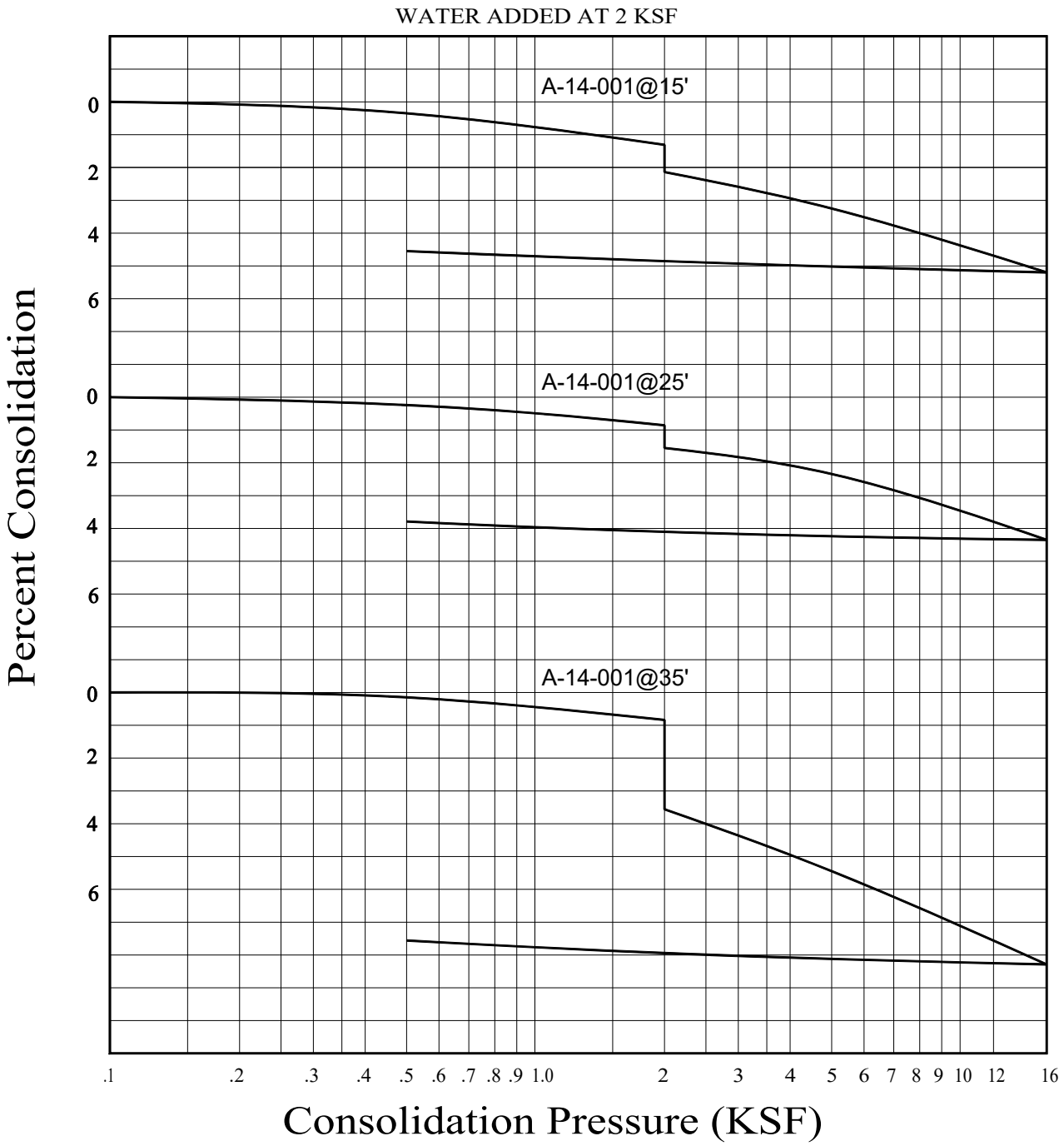

GEOCON
WEST, INC.

ENVIRONMENTAL GEOTECHNICAL MATERIALS
3303 N. SAN FERNANDO BLVD. - SUITE 100 - BURBANK, CA 91504
PHONE (818) 841-8388 - FAX (818) 841-1704

CONSOLIDATION TEST RESULTS

BEAR VALLEY ROAD OVERHEAD
AT BNSF RAILROAD
CITYOF VICTORVILLE, CALIFORNIA

Drafted by: JTA	Checked by: NDB	FEB 2017	PROJECT NO. A9072-06-01	FIG. B3

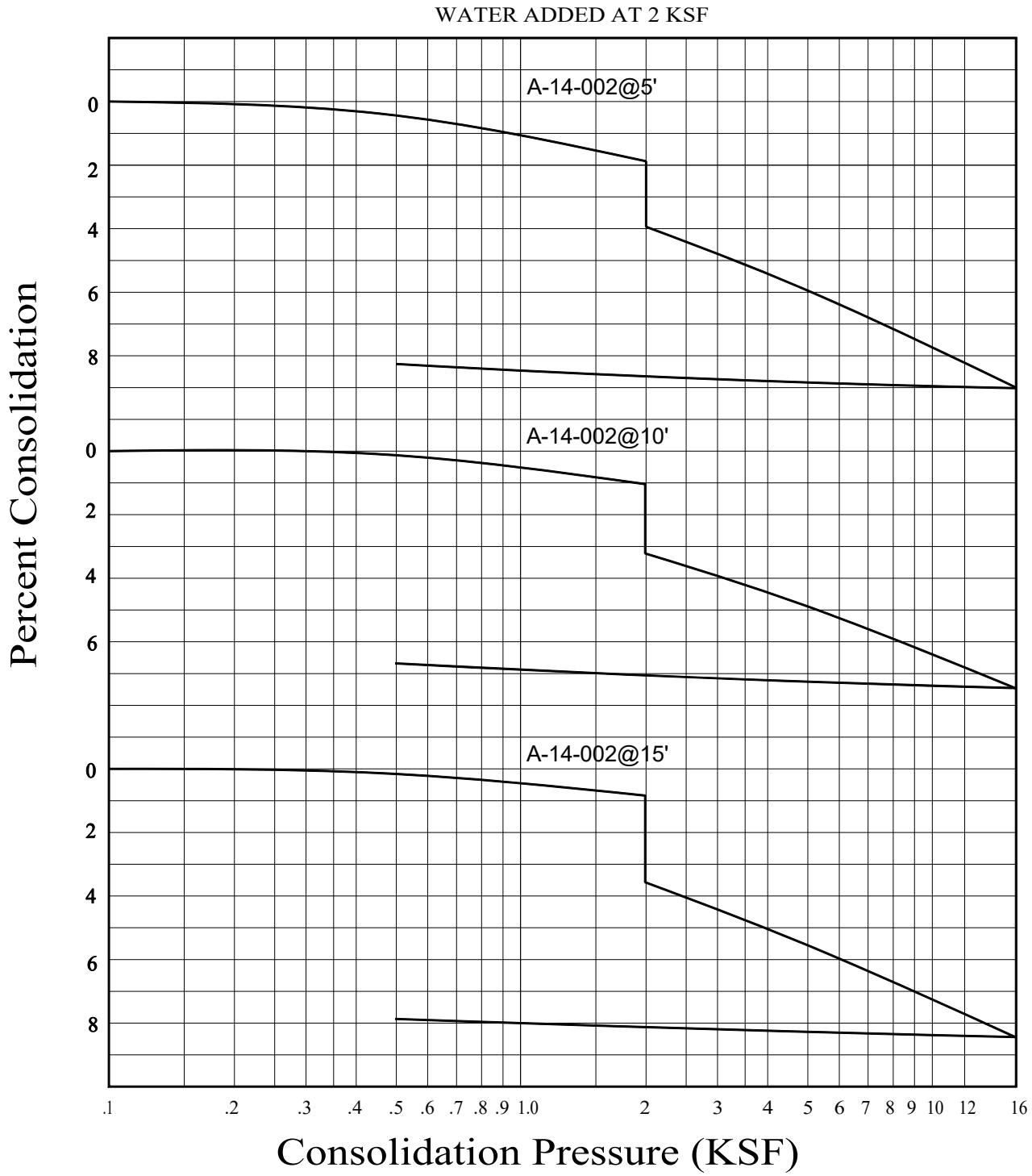

GEOCON
WEST, INC.

ENVIRONMENTAL GEOTECHNICAL MATERIALS
3303 N. SAN FERNANDO BLVD. - SUITE 100 - BURBANK, CA 91504
PHONE (818) 841-8388 - FAX (818) 841-1704

CONSOLIDATION TEST RESULTS

BEAR VALLEY ROAD OVERHEAD
AT BNSF RAILROAD
CITYOF VICTORVILLE, CALIFORNIA

Drafted by: JTA	Checked by: NDB	FEB 2017	PROJECT NO. A9072-06-01	FIG. B4

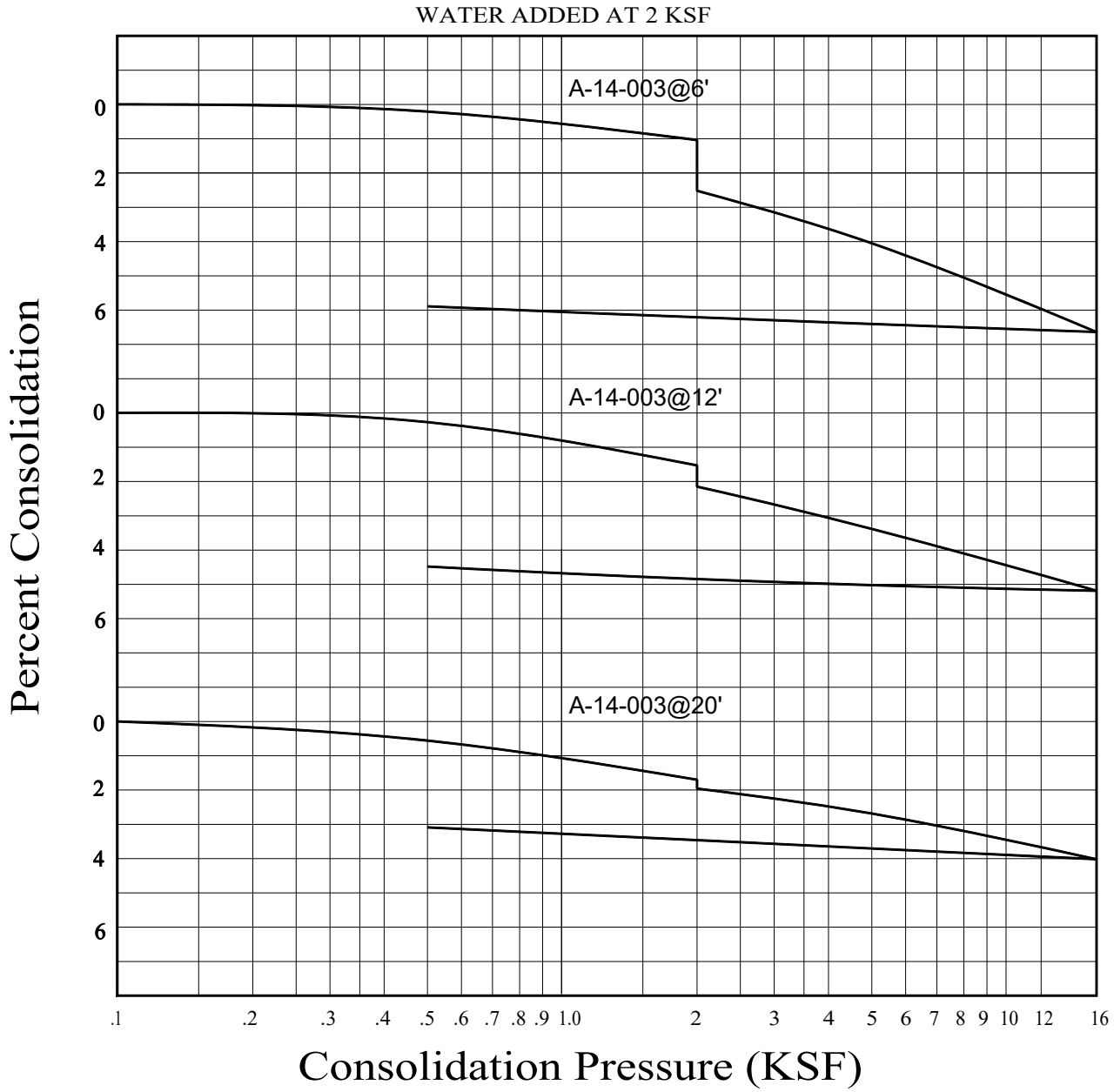

GEOCON
WEST, INC.

ENVIRONMENTAL GEOTECHNICAL MATERIALS
3303 N. SAN FERNANDO BLVD. - SUITE 100 - BURBANK, CA 91504
PHONE (818) 841-8388 - FAX (818) 841-1704

CONSOLIDATION TEST RESULTS

BEAR VALLEY ROAD OVERHEAD
AT BNSF RAILROAD
CITYOF VICTORVILLE, CALIFORNIA

Drafted by: JTA	Checked by: NDB	FEB 2017	PROJECT NO. A9072-06-01	FIG. B5

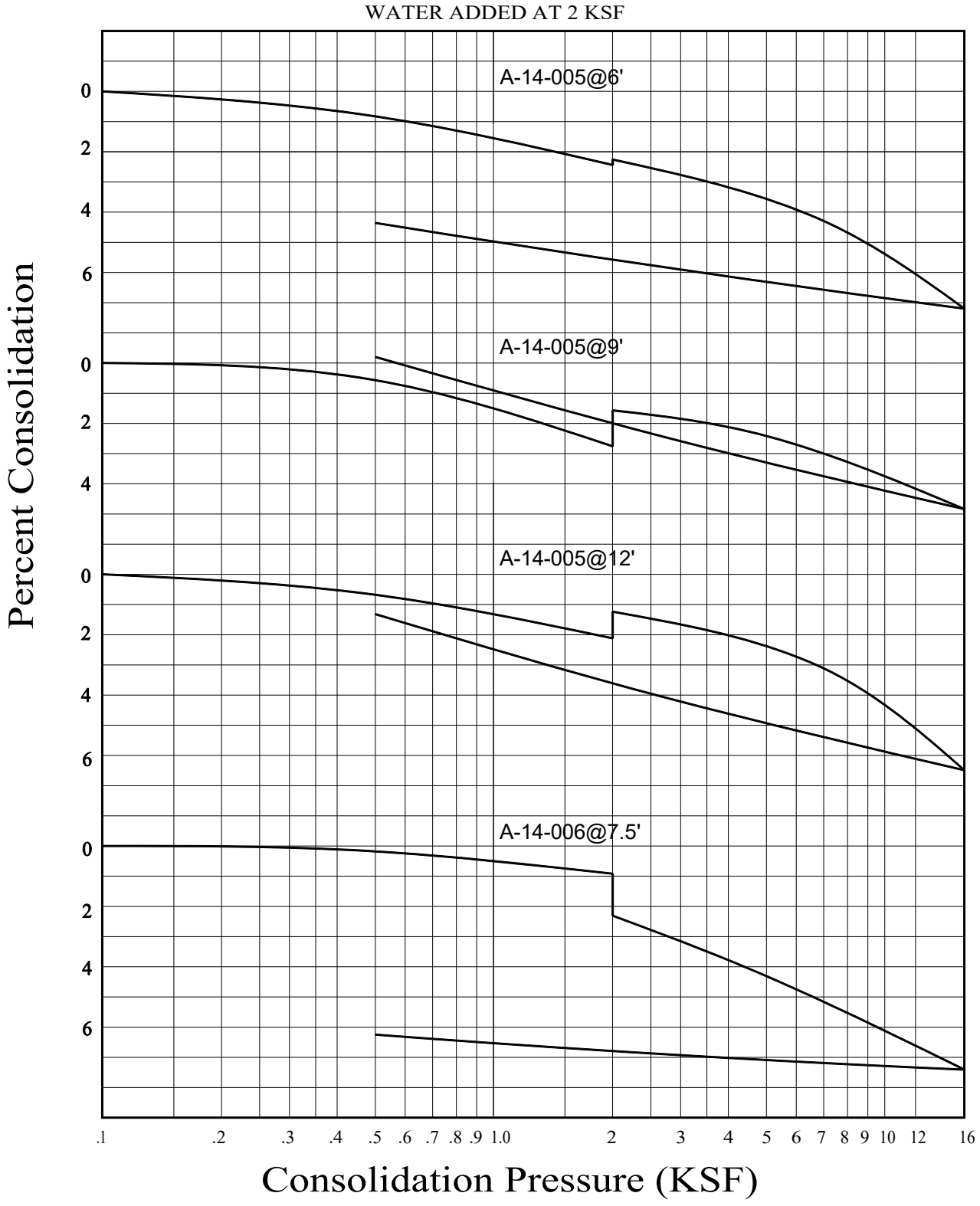

GEOCON
WEST, INC.

ENVIRONMENTAL GEOTECHNICAL MATERIALS
3303 N. SAN FERNANDO BLVD. - SUITE 100 - BURBANK, CA 91504
PHONE (818) 841-8388 - FAX (818) 841-1704

CONSOLIDATION TEST RESULTS

BEAR VALLEY ROAD OVERHEAD
AT BNSF RAILROAD
CITYOF VICTORVILLE, CALIFORNIA

Drafted by: JTA	Checked by: NDB	FEB 2017	PROJECT NO. A9072-06-01	FIG. B6

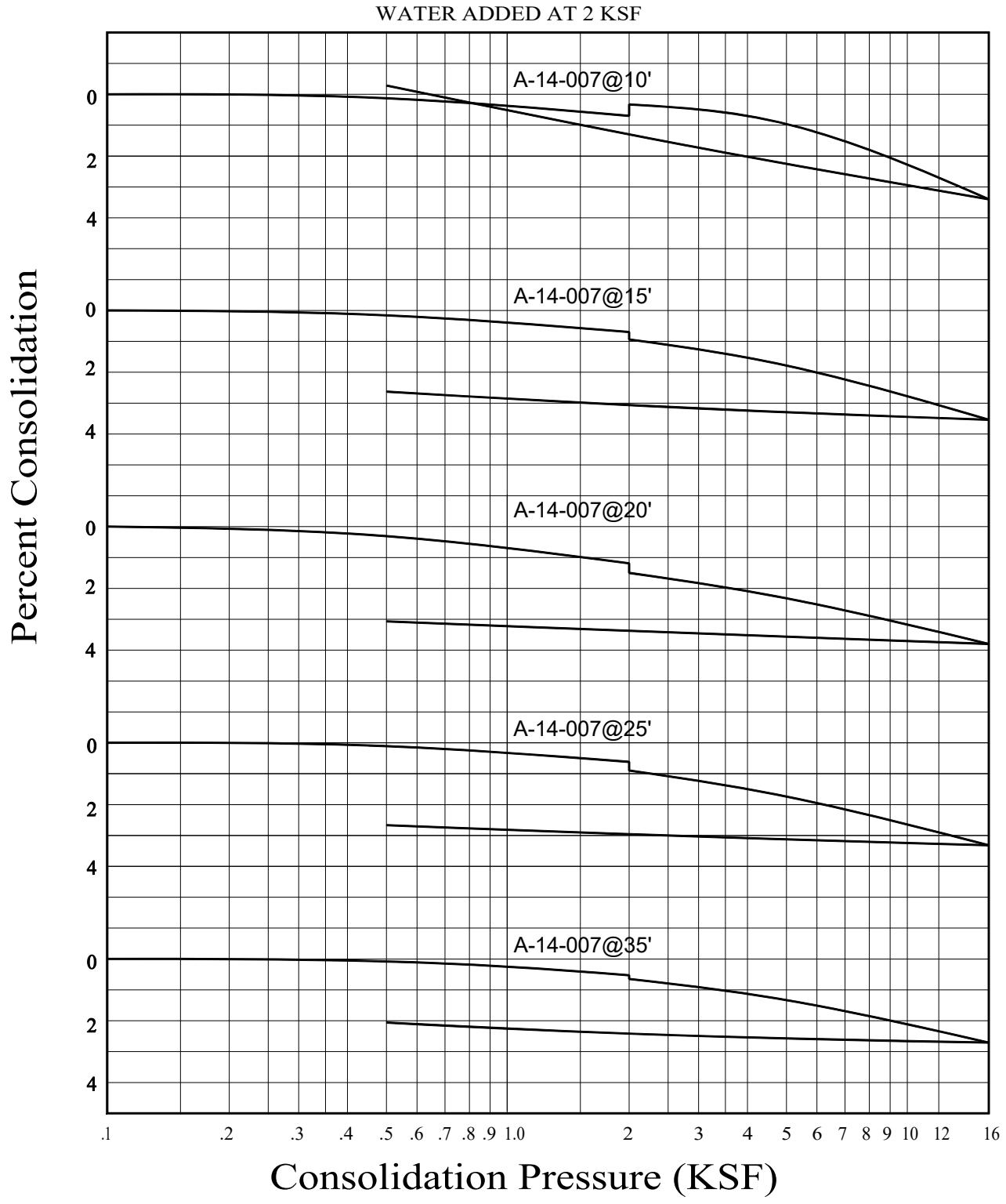

GEOCON
WEST, INC.

ENVIRONMENTAL GEOTECHNICAL MATERIALS
3303 N. SAN FERNANDO BLVD. - SUITE 100 - BURBANK, CA 91504
PHONE (818) 841-8388 - FAX (818) 841-1704

CONSOLIDATION TEST RESULTS

BEAR VALLEY ROAD OVERHEAD
AT BNSF RAILROAD
CITYOF VICTORVILLE, CALIFORNIA

Drafted by: JTA	Checked by: NDB	FEB 2017	PROJECT NO. A9072-06-01	FIG. B7

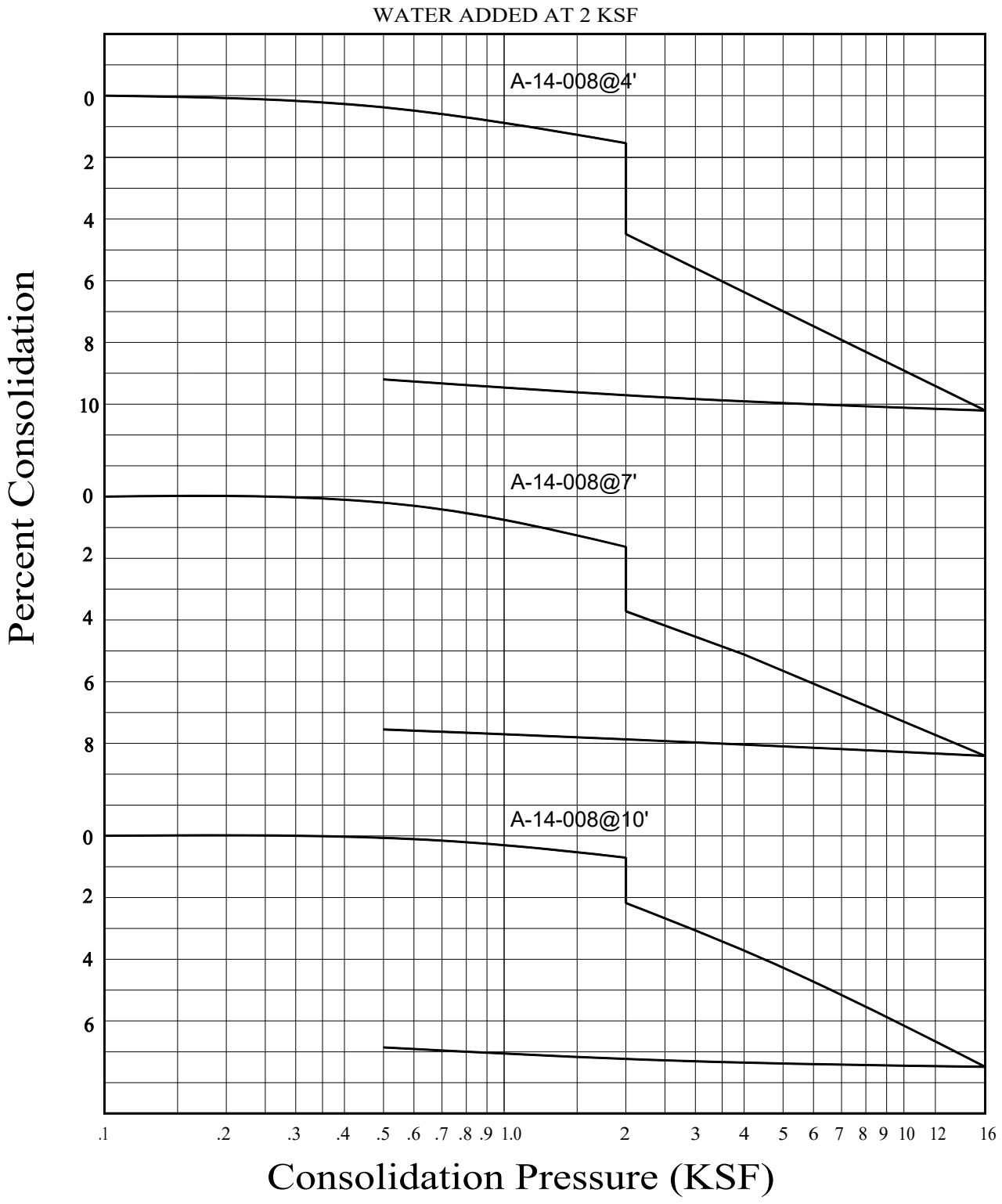

GEOCON
WEST, INC.

ENVIRONMENTAL GEOTECHNICAL MATERIALS
3303 N. SAN FERNANDO BLVD. - SUITE 100 - BURBANK, CA 91504
PHONE (818) 841-8388 - FAX (818) 841-1704

CONSOLIDATION TEST RESULTS

BEAR VALLEY ROAD OVERHEAD
AT BNSF RAILROAD
CITYOF VICTORVILLE, CALIFORNIA

Drafted by: JTA	Checked by: NDB	FEB 2017	PROJECT NO. A9072-06-01	FIG. B8

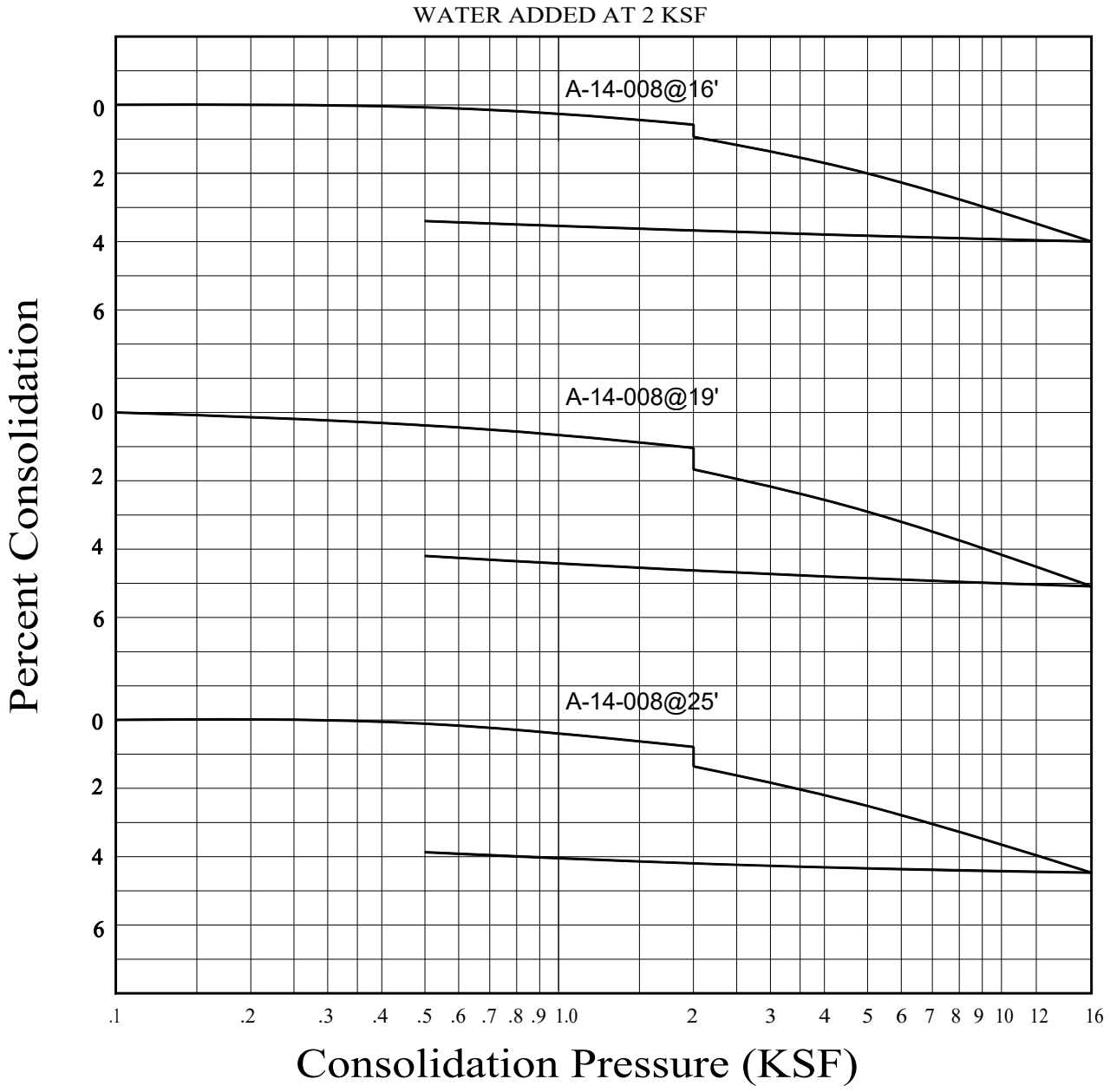

GEOCON
WEST, INC.

ENVIRONMENTAL GEOTECHNICAL MATERIALS
3303 N. SAN FERNANDO BLVD. - SUITE 100 - BURBANK, CA 91504
PHONE (818) 841-8388 - FAX (818) 841-1704

CONSOLIDATION TEST RESULTS

BEAR VALLEY ROAD OVERHEAD
AT BNSF RAILROAD
CITYOF VICTORVILLE, CALIFORNIA

Drafted by: JTA	Checked by: NDB	FEB 2017	PROJECT NO. A9072-06-01	FIG. B9

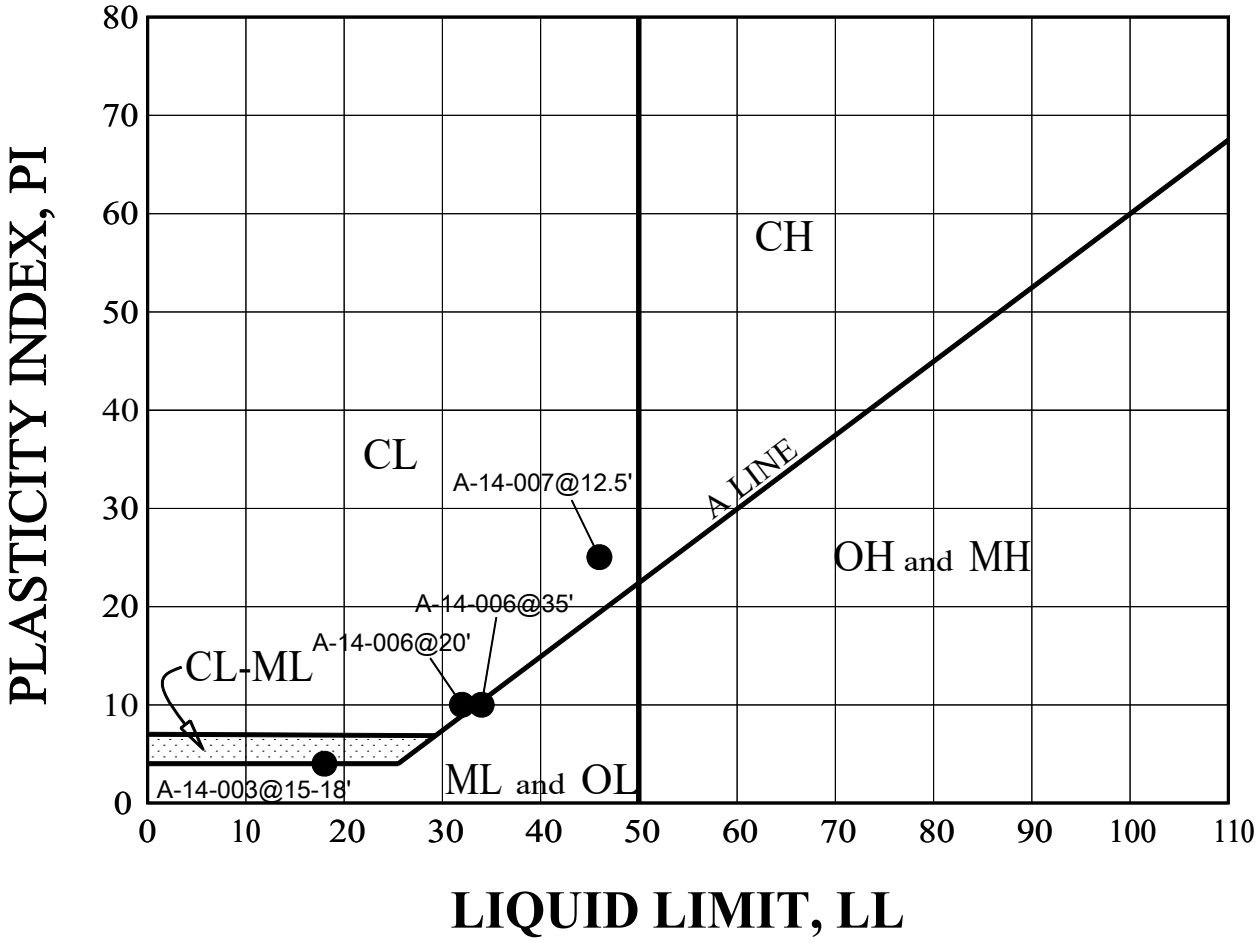

BORING NUMBER	DEPTH (FEET)	LL	PL	PI	SOIL BEHAVIOR
A-14-003	**15-18**	**18**	**14**	**4**	**CL-ML**
A-14-005	**35**	**N/P**	**N/P**	**N/P**	**- -**
A-14-006	**20**	**32**	**22**	**10**	**CL**
A-14-006	**35**	**34**	**24**	**10**	**ML**
A-14-007	**12.5**	**46**	**21**	**25**	**CL**

*N/P indicates Non-Plastic

GEOCON WEST, INC.
ENVIRONMENTAL GEOTECHNICAL MATERIALS
3303 N. SAN FERNANDO BLVD. - SUITE 100 - BURBANK, CA 91504
PHONE (818) 841-8388 - FAX (818) 841-1704

Drafted by: JTA | Checked by: NDB

ATTERBERG LIMITS

BEAR VALLEY ROAD OVERHEAD
AT BNSF RAILROAD
CITYOF VICTORVILLE, CALIFORNIA

FEB 2017 | PROJECT NO. A9072-06-01 | FIG. B10

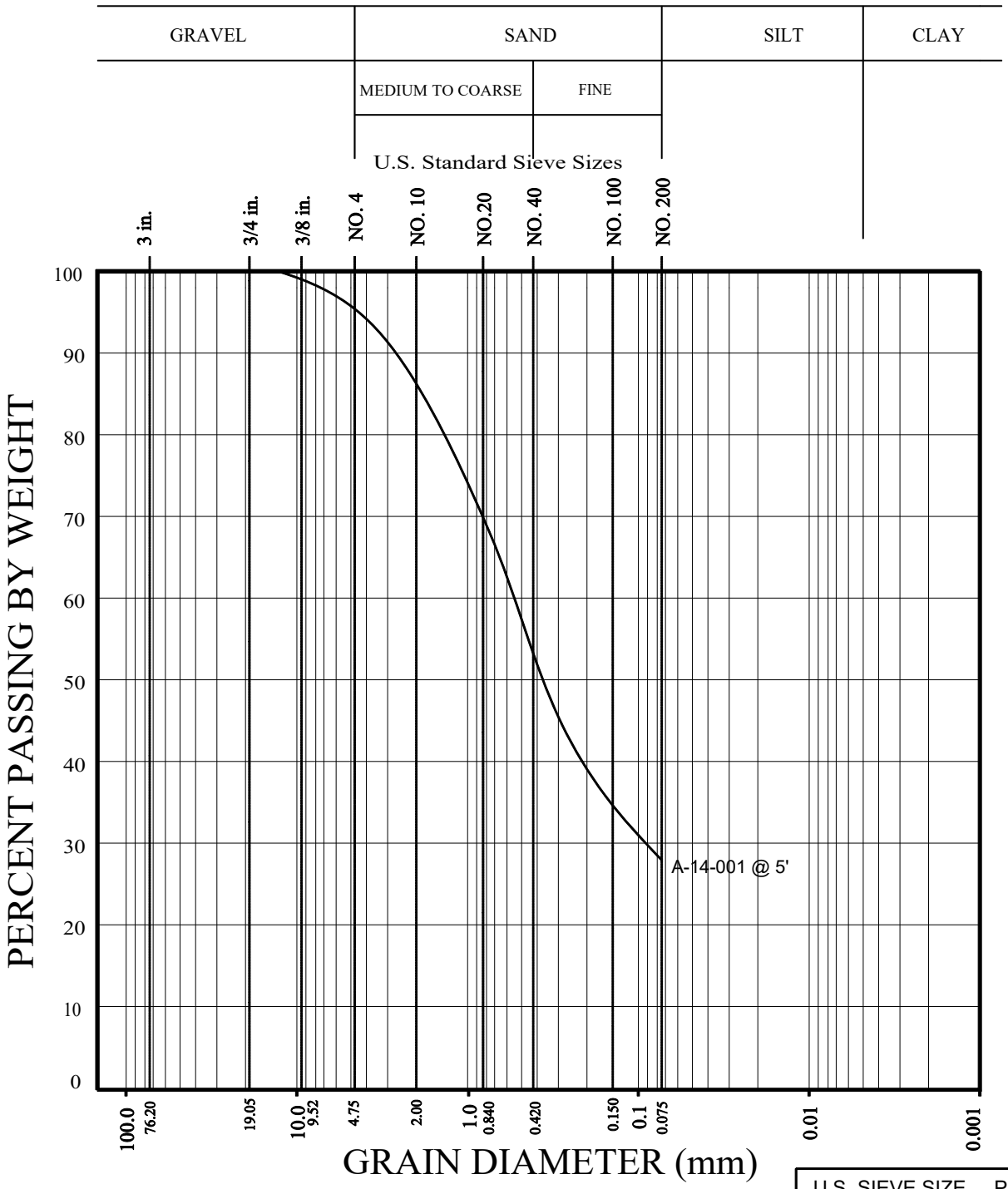

U.S. SIEVE SIZE	PERCENT
GRAVEL	5
SAND	67
FINES	28

GEOCON
WEST, INC.
ENVIRONMENTAL GEOTECHNICAL MATERIALS
3303 N. SAN FERNANDO BLVD. - SUITE 100 - BURBANK, CA 91504
PHONE (818) 841-8388 - FAX (818) 841-1704

GRAIN SIZE DISTRIBUTION

BEAR VALLEY ROAD OVERHEAD
AT BNSF RAILROAD
CITYOF VICTORVILLE, CALIFORNIA

Drafted by: JTA	Checked by: NDB	FEB 2017	PROJECT NO. A9072-06-01	FIG. B11

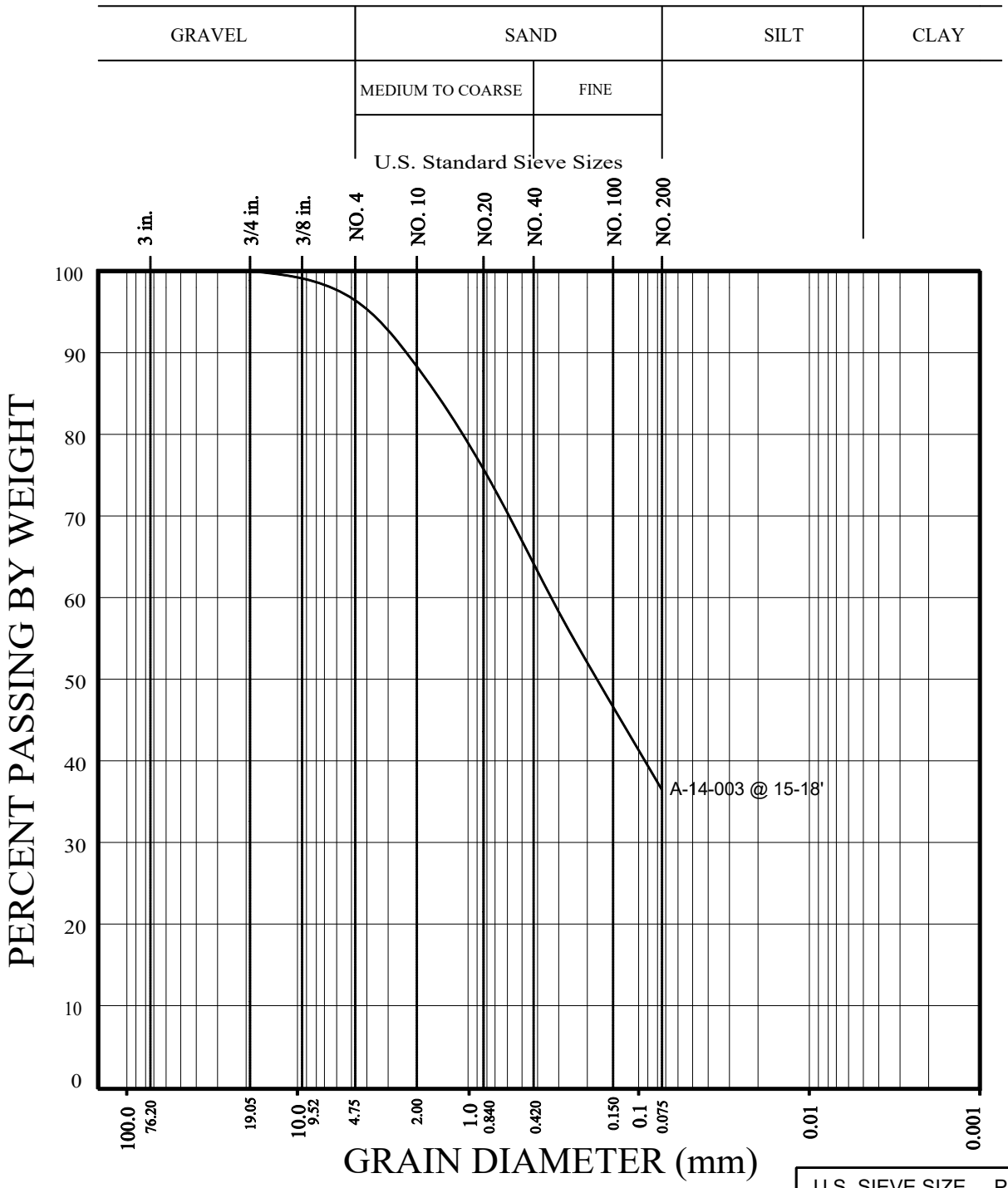

U.S. SIEVE SIZE	PERCENT
GRAVEL	4
SAND	60
FINES	36

GEOCON
WEST, INC.
ENVIRONMENTAL GEOTECHNICAL MATERIALS
3303 N. SAN FERNANDO BLVD. - SUITE 100 - BURBANK, CA 91504
PHONE (818) 841-8388 - FAX (818) 841-1704

GRAIN SIZE DISTRIBUTION

BEAR VALLEY ROAD OVERHEAD
AT BNSF RAILROAD
CITYOF VICTORVILLE, CALIFORNIA

Drafted by: JTA	Checked by: NDB	FEB 2017	PROJECT NO. A9072-06-01	FIG. B12

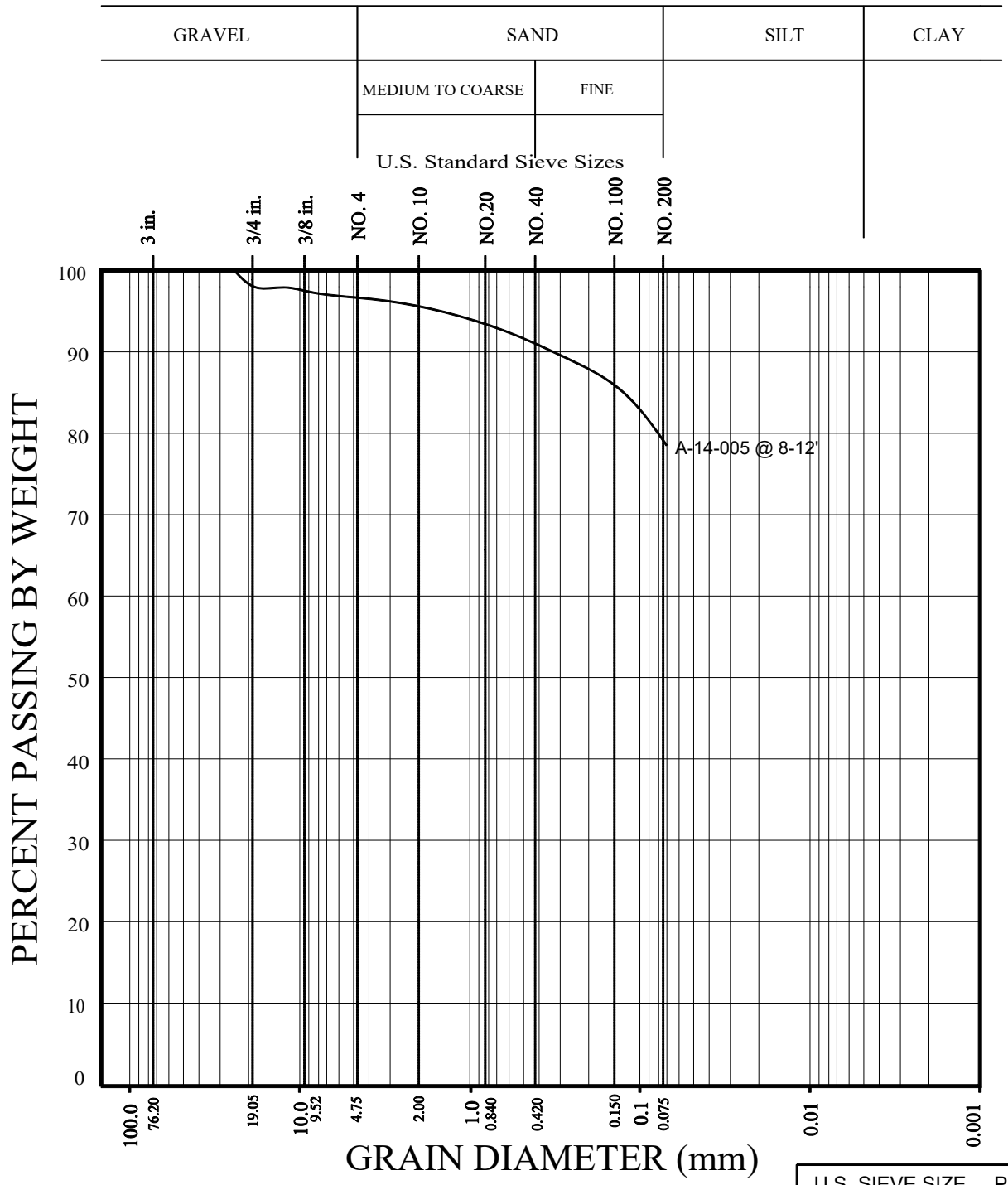

U.S. SIEVE SIZE	PERCENT
GRAVEL	3
SAND	18
FINES	79

GEOCON
WEST, INC.

ENVIRONMENTAL GEOTECHNICAL MATERIALS
3303 N. SAN FERNANDO BLVD. - SUITE 100 - BURBANK, CA 91504
PHONE (818) 841-8388 - FAX (818) 841-1704

GRAIN SIZE DISTRIBUTION

BEAR VALLEY ROAD OVERHEAD
AT BNSF RAILROAD
CITYOF VICTORVILLE, CALIFORNIA

Drafted by: JTA	Checked by: NDB	FEB 2017	PROJECT NO. A9072-06-01	FIG. B13

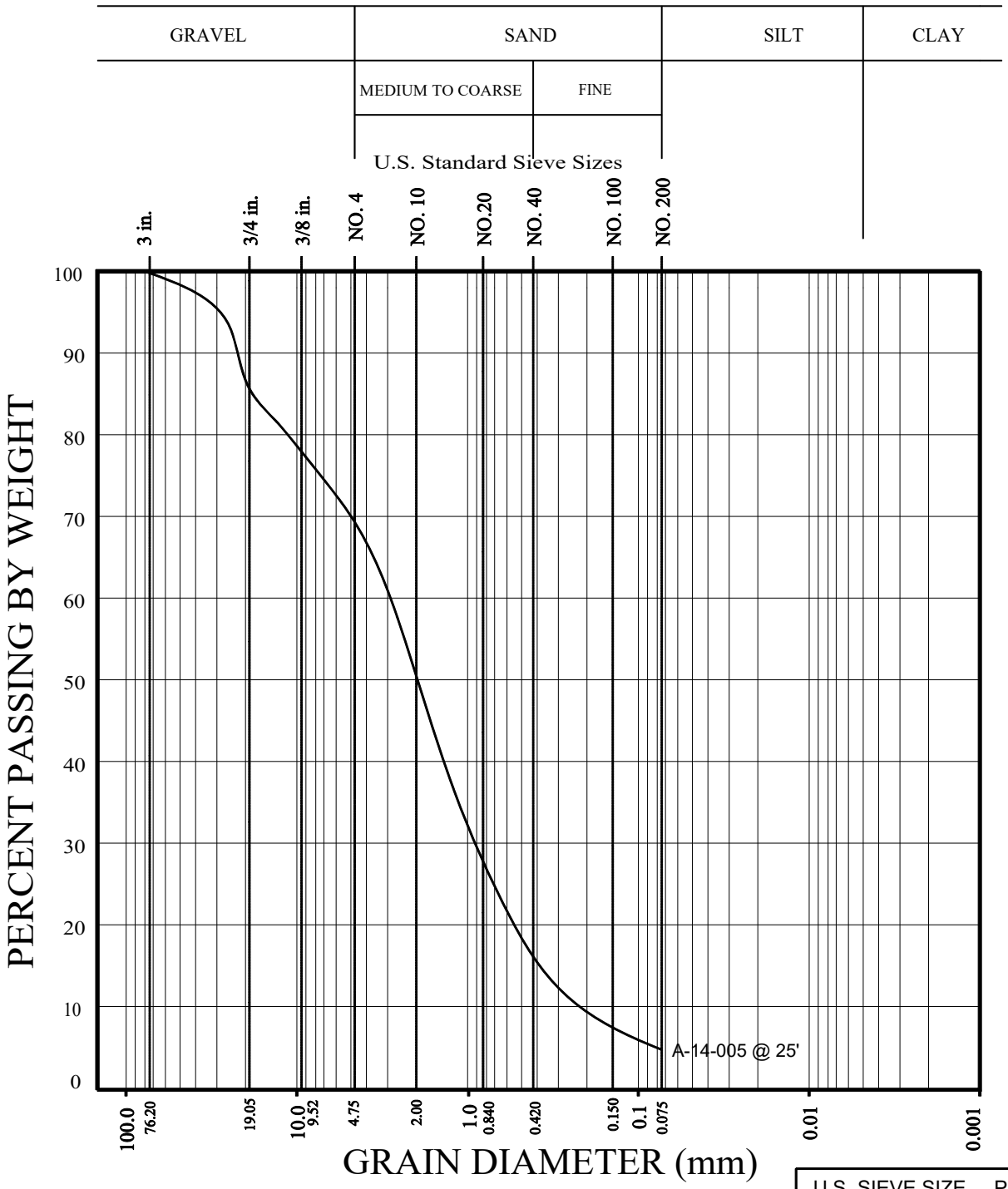

U.S. SIEVE SIZE	PERCENT
GRAVEL	31
SAND	64
FINES	5

GEOCON
WEST, INC.
ENVIRONMENTAL GEOTECHNICAL MATERIALS
3303 N. SAN FERNANDO BLVD. - SUITE 100 - BURBANK, CA 91504
PHONE (818) 841-8388 - FAX (818) 841-1704

GRAIN SIZE DISTRIBUTION

BEAR VALLEY ROAD OVERHEAD
AT BNSF RAILROAD
CITYOF VICTORVILLE, CALIFORNIA

Drafted by: JTA	Checked by: NDB	FEB 2017	PROJECT NO. A9072-06-01	FIG. B14

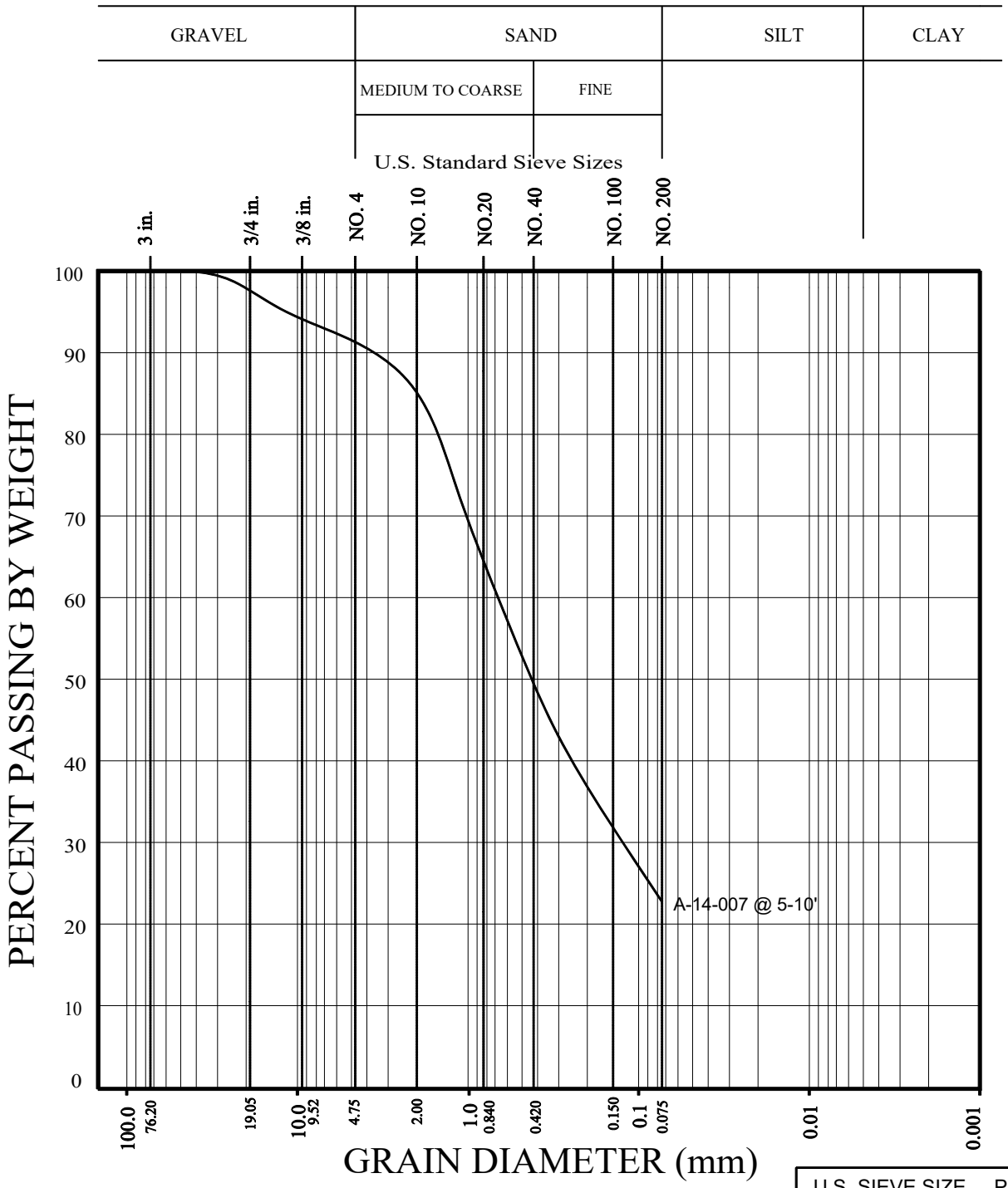

U.S. SIEVE SIZE	PERCENT
GRAVEL	9
SAND	68
FINES	23

GEOCON
WEST, INC.
ENVIRONMENTAL GEOTECHNICAL MATERIALS
3303 N. SAN FERNANDO BLVD. - SUITE 100 - BURBANK, CA 91504
PHONE (818) 841-8388 - FAX (818) 841-1704

GRAIN SIZE DISTRIBUTION

BEAR VALLEY ROAD OVERHEAD
AT BNSF RAILROAD
CITYOF VICTORVILLE, CALIFORNIA

Drafted by: JTA	Checked by: NDB	FEB 2017	PROJECT NO. A9072-06-01	FIG. B15

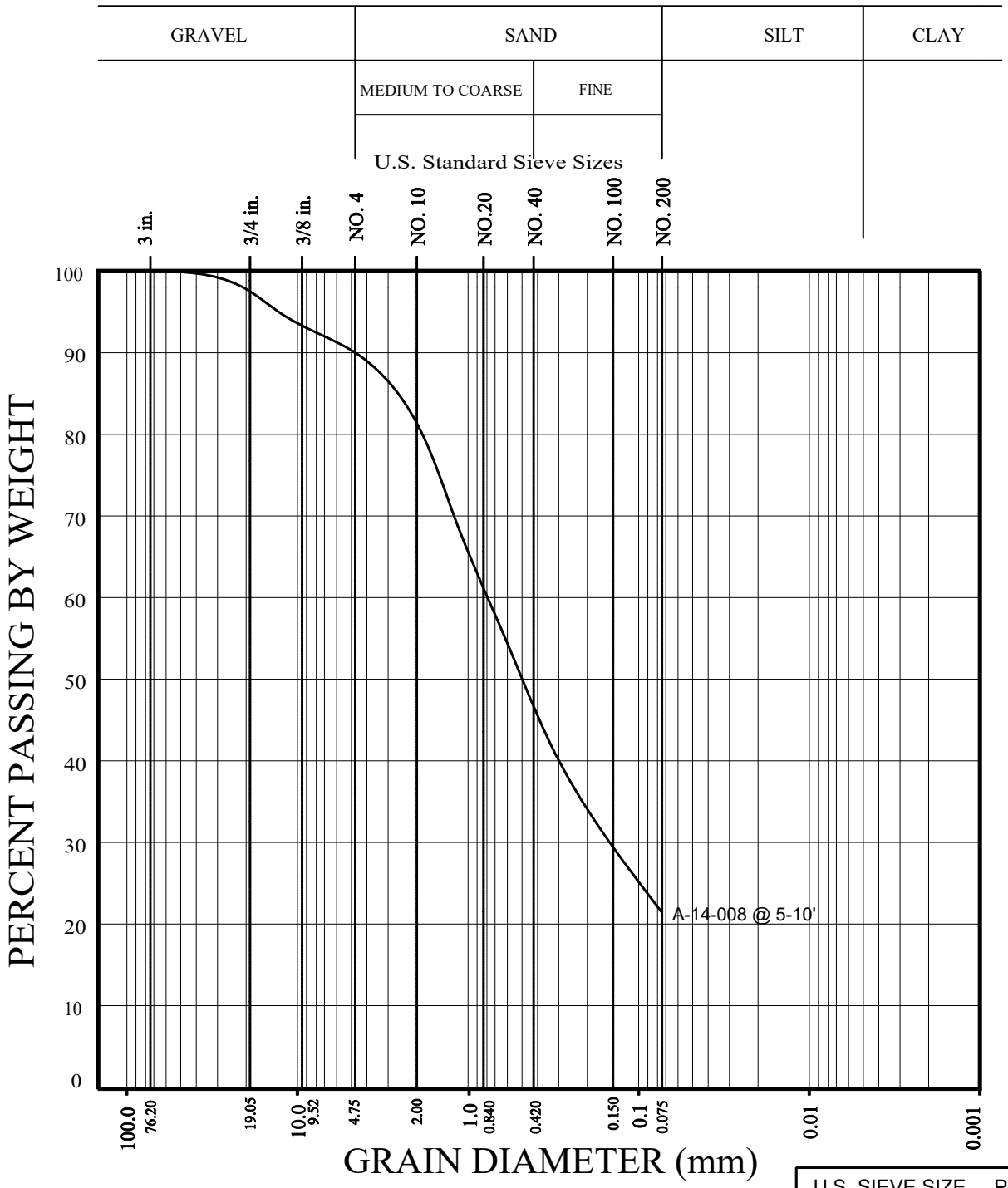

U.S. SIEVE SIZE	PERCENT
GRAVEL	10
SAND	69
FINES	21

GEOCON
WEST, INC.
ENVIRONMENTAL GEOTECHNICAL MATERIALS
3303 N. SAN FERNANDO BLVD. - SUITE 100 - BURBANK, CA 91504
PHONE (818) 841-8388 - FAX (818) 841-1704

GRAIN SIZE DISTRIBUTION

BEAR VALLEY ROAD OVERHEAD
AT BNSF RAILROAD
CITYOF VICTORVILLE, CALIFORNIA

Drafted by: JTA	Checked by: NDB	FEB 2017	PROJECT NO. A9072-06-01	FIG. B16

SUMMARY OF LABORATORY EXPANSION INDEX TEST RESULTS
ASTM D 4829-11

Sample No.	Moisture Content (%)		Dry Density (pcf)	Expansion Index	*UBC Classification	**CBC Classification
	Before	After				
A-14-002 @ 0-2'	7.4	12.2	118.0	1	Very Low	Non Expansive
A-14-003 @ 0-2'	7.3	11.5	119.1	0	Very Low	Non Expansive
A-14-005 @ 3'	8.6	18.0	109.1	3	Very Low	Non Expansive

* Reference: 1997 Uniform Building Code, Table 18-I-B.

** Reference: 2016 California Building Code, Section 1803.5.3

SUMMARY OF LABORATORY MAXIMUM DENSITY AND AND OPTIMUM MOISTURE CONTENT TEST RESULTS
ASTM D 1557-12

Sample No.	Soil Description	Maximum Dry Density (pcf)	Optimum Moisture (%)
A-14-002 @ 0-2'	Pale Brown Sand with Silt	134.1	7.6
A-14-003 @ 0-2'	Olive Brown Silty Sand	134.9	7.3
A-14-005 @ 8-12'	Olive Brown Sandy Silt	119.0	14.0
A-14-006 @ 0-5'	Olive Brown Silty Sand	134.0	7.0

SUMMARY OF LABORATORY R-VALUE TEST RESULTS
ASTM D 2844-13

Sample No.	Soil Description	R-Value
A-14-002 @ 0-2'	Brown Silty Sand	52
A-14-003 @ 0-2'	Olive Brown Silty Sand	53

GEOCON WEST, INC.
ENVIRONMENTAL GEOTECHNICAL MATERIALS
3303 N. SAN FERNANDO BLVD. - SUITE 100 - BURBANK, CA 91504
PHONE (818) 841-8388 - FAX (818) 841-1704

LABORATORY TEST RESULTS

BEAR VALLEY ROAD OVERHEAD
AT BNSF RAILROAD
CITYOF VICTORVILLE, CALIFORNIA

Drafted by: JTA	Checked by: NDB	FEB 2017	PROJECT NO. A9072-06-01	FIG. B17

Project Name: Bear Valley Overhead at BNSF
Location: Victorville, CA

Project No.: A9072-06-01
Sample No.: A-14-002@0-2'

Mold ID	A	B	C
Batch Weight	1200	1200	1200
Humidifying Moisture	48	48	48
Moisture Added	36	42	30
Soil + Mold	2950	2973	3260
Mold	1818	1826	2104
Soil	1132	1147	1156
Foot PSI	350	335	350
Height of Sample	2.41	2.46	2.48
Exudation Pressure	4800	3000	5900
Exudation PSI	380	240	470
Stability Ph	38	75	26
Turns Displacement	4.24	4.60	4.61
R-Value	66	38	74
Corrected R-Value	64	38	74
Thick by Stab./Foot	0.49	0.89	0.37
Expansion Reading	0	0	3
Thick/Exp. Press/Fppt	0.00	0.00	0.10
Moisture Content	9.5	10.0	8.9
Dry Density	130.2	128.3	129.5

Gradation Analysis

	Wt. Ret.	% Ret.
1"	-	0.8
3/4"	300	1
3/8"	835	3.9
#4	1661	7.7
Total	21,503g	

Sample Description:
SM: Brown Silty (F-C) Sand

R Value By Expansion:	82
R Value By Exudation	52
R Value By Equilibrium	**52**

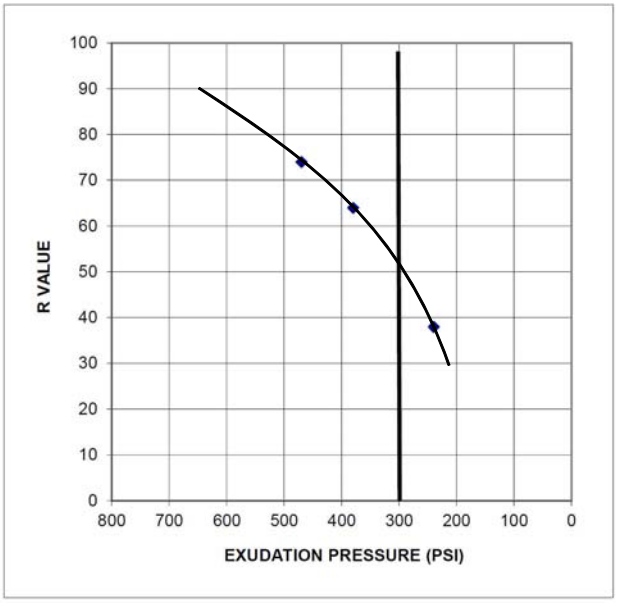

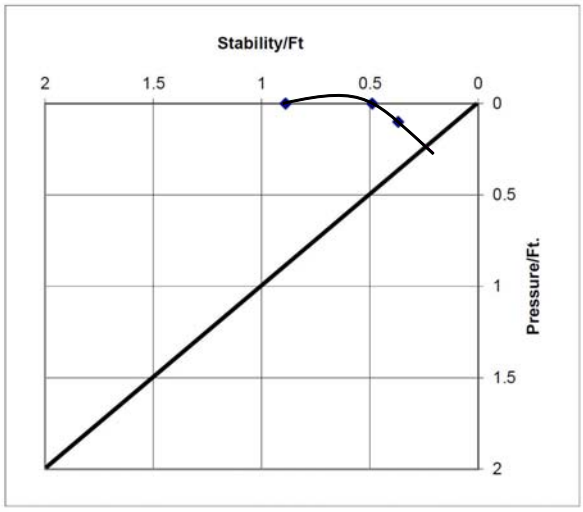

GEOCON WEST, INC.
ENVIRONMENTAL GEOTECHNICAL MATERIALS
3303 N. SAN FERNANDO BLVD. - SUITE 100 - BURBANK, CA 91504
PHONE (818) 841-8388 - FAX (818) 841-1704

R-VALUE TEST RESULTS

BEAR VALLEY ROAD OVERHEAD
AT BNSF RAILROAD
CITYOF VICTORVILLE, CALIFORNIA

JTA		8000	FEB 2017	PROJECT NO. A9072-06-01	FIG. B18

Project Name: Bear Valley Overhead at BNSF
Location: Victorville, CA

Project No.: A9072-06-01
Sample No.: A-14-003@0-2'

Mold ID	D	E	F
Batch Weight	1200	1200	1200
Humidifying Moisture	24	24	24
Moisture Added	48	60	54
Soil + Mold	3007	3082	2974
Mold	1851	1924	1806
Soil	1156	1158	1168
Foot PSI	350	350	350
Height of Sample	2.49	2.49	2.51
Exudation Pressure	9900	3700	4500
Exudation PSI	790	290	360
Stability Ph	19	60	36
Turns Displacement	5.14	4.56	4.74
R-Value	78	48	64
Corrected R-Value	78	48	64
Thick by Stab./Foot	0.32	0.75	0.52
Expansion Reading	0.6	0	0
Thick/Exp. Press/Fppt	0.20	0.00	0.00
Moisture Content	8.4	9.5	8.9
Dry Density	129.7	130.2	129.4

Gradation Analysis

	Wt. Ret.	% Ret.
1"	0	0
3/4"	106	0.5
3/8"	569	2.5
#4	1434	6.4
Total	22,468 g	

Sample Description:
SM- Olive Brown (F-C) Silty Sand with Some Clay

R Value By Expansion:	80
R Value By Exudation	53
R Value By Equilibrium	**53**

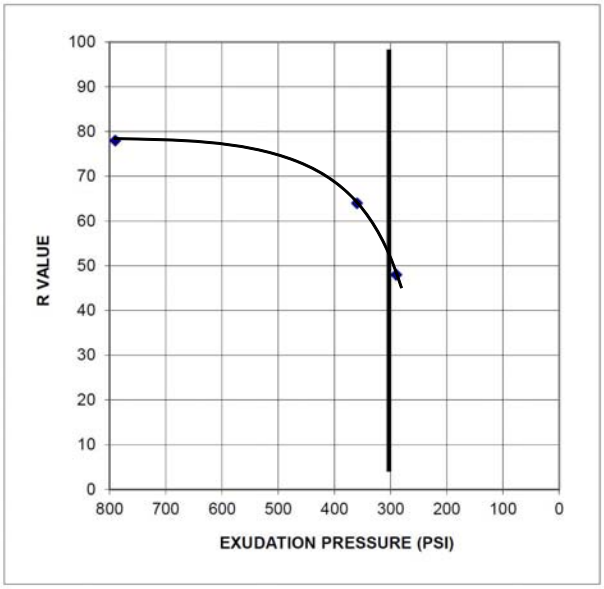

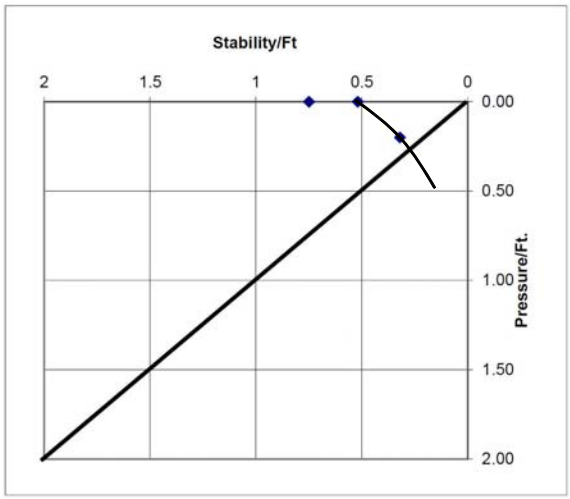

GEOCON WEST, INC.
ENVIRONMENTAL GEOTECHNICAL MATERIALS
3303 N. SAN FERNANDO BLVD. - SUITE 100 - BURBANK, CA 91504
PHONE (818) 841-8388 - FAX (818) 841-1704

R-VALUE TEST RESULTS

BEAR VALLEY ROAD OVERHEAD
AT BNSF RAILROAD
CITYOF VICTORVILLE, CALIFORNIA

JTA		8000	FEB 2017	PROJECT NO. A9072-06-01	FIG. B19

SUMMARY OF LABORATORY POTENTIAL OF HYDROGEN (pH) AND RESISTIVITY TEST RESULTS CALIFORNIA TEST NO. 643

Sample No.	pH	Resistivity (ohm centimeters)
A-14-005 @ 3'	7.63	3100
A-14-006 @ 0-5'	8.26	2600

SUMMARY OF LABORATORY CHLORIDE CONTENT TEST RESULTS EPA NO. 325.3

Sample No.	Chloride Ion Content (%)
A-14-005 @ 3'	0.001
A-14-006 @ 0-5'	0.004

SUMMARY OF LABORATORY WATER SOLUBLE SULFATE TEST RESULTS CALIFORNIA TEST NO. 417

Sample No.	Water Soluble Sulfate (% SO_4)	Sulfate Exposure*
A-14-005 @ 3'	0.000	Negligible
A-14-006 @ 0-5'	0.000	Negligible

* Reference: 2016 California Building Code, Section 1904.3 and ACI 318-11 Section 4.3.

GEOCON WEST, INC.
ENVIRONMENTAL GEOTECHNICAL MATERIALS
3303 N. SAN FERNANDO BLVD. - SUITE 100 - BURBANK, CA 91504
PHONE (818) 841-8388 - FAX (818) 841-1704

CORROSIVITY TEST RESULTS

BEAR VALLEY ROAD OVERHEAD
AT BNSF RAILROAD
CITYOF VICTORVILLE, CALIFORNIA

Drafted by: JTA	Checked by: NDB	FEB 2017	PROJECT NO. A9072-06-01	FIG. B20

APPENDIX C

APPENDIX C

General Plan

FOR

BEAR VALLEY ROAD OVERHEAD AT BNSF RAILROAD
VICTORVILLE, CALIFORNIA

DIST	COUNTY	ROUTE	POST MILES TOTAL PROJECT	SHEET No	TOTAL SHEETS
08	SB	CR		56	82

REGISTERED CIVIL ENGINEER DATE

PLANS APPROVAL DATE

REGISTERED PROFESSIONAL ENGINEER T. OSTERKAMP No. C46783 Exp. 6/30/17 CIVIL STATE OF CALIFORNIA

The State of California or its officers or agents shall not be responsible for the accuracy or completeness of scanned copies of this plan sheet.

DOKKEN ENGINEERING
110 BLUE RAVINE ROAD, SUITE 200
FOLSOM, CA 95630

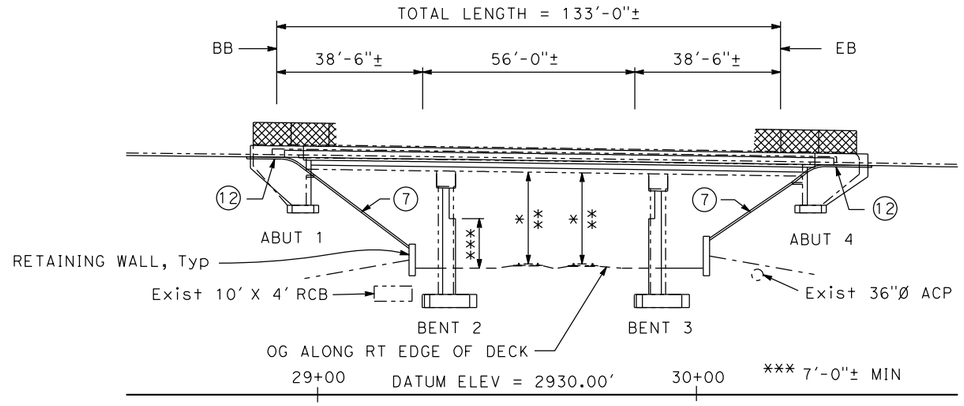

ELEVATION

1" = 20'

	WEST TRACK	EAST TRACK
* MIN VERT CLR TO WIDENING	24'-0"±	23'-5"±
** MIN VERT CLR TO EXISTING	22'-9¼"±	22'-3"±

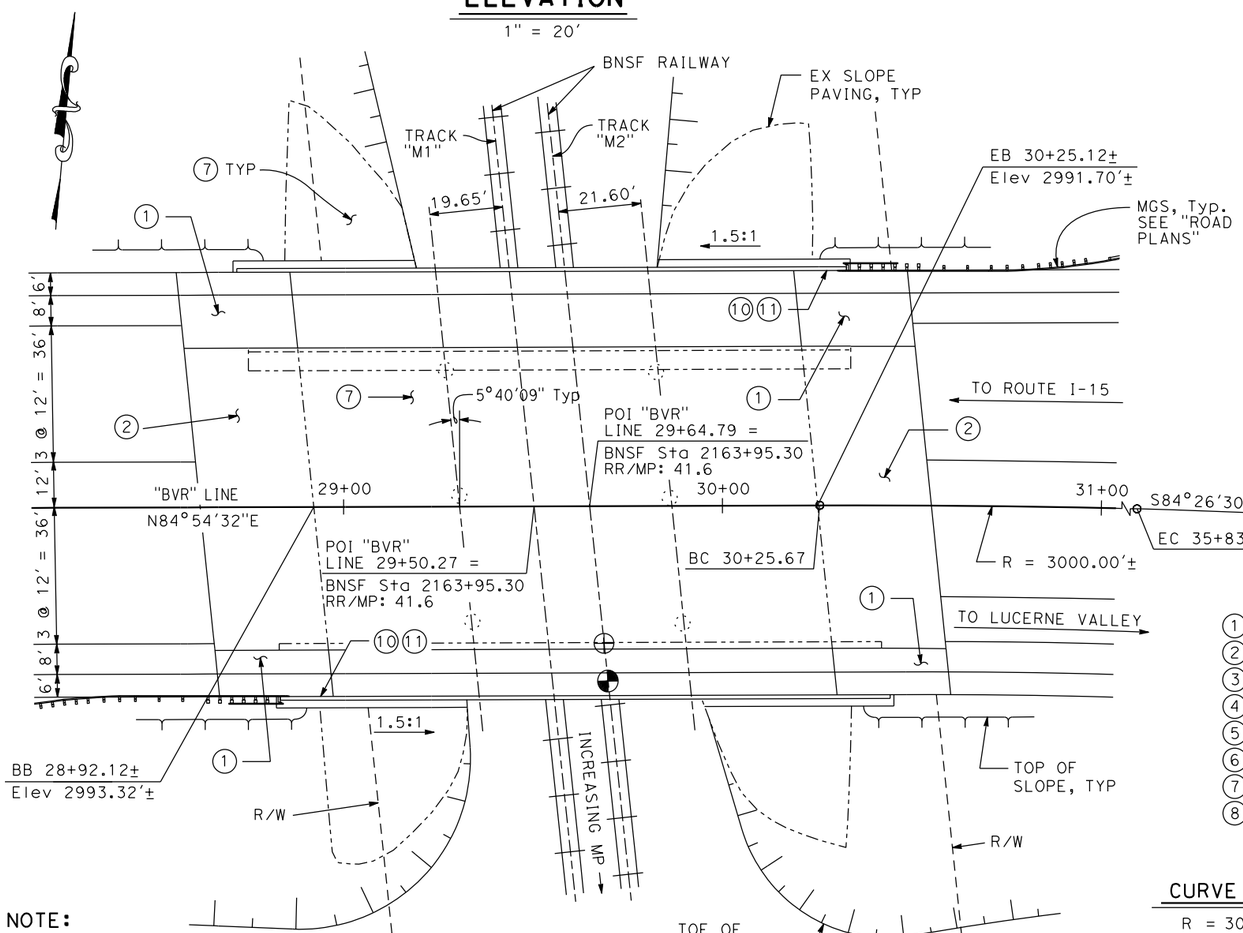

PLAN

1" = 20'

NOTE:

The contractor shall verify all controlling field dimensions before ordering or fabricating any material.

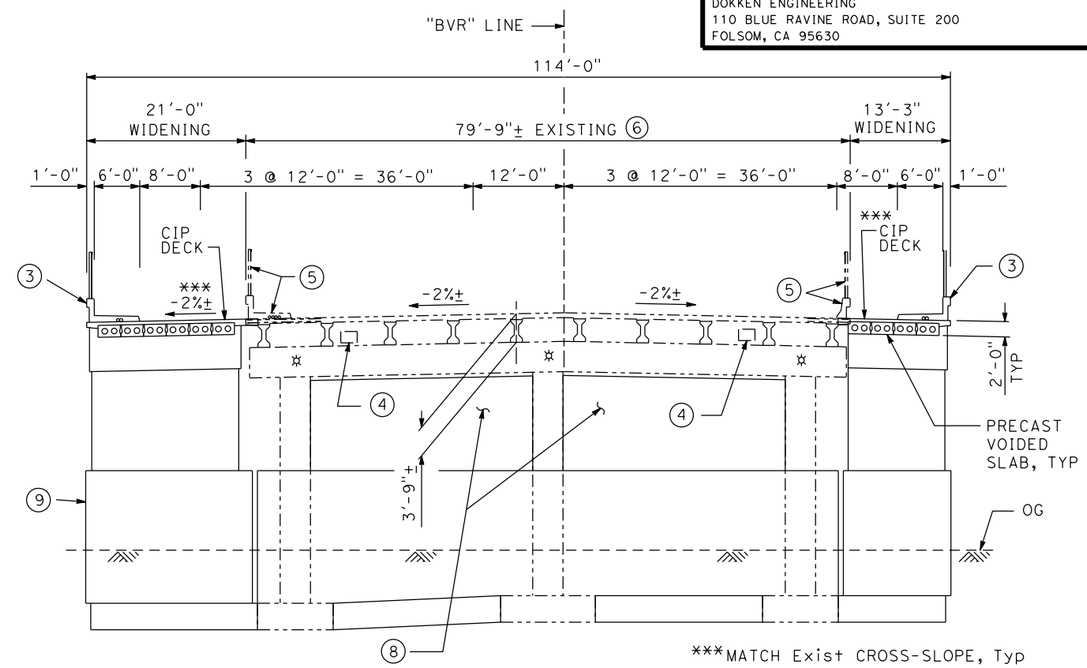

TYPICAL SECTION

1" = 10'

LEGEND:

1. STRUCTURE APPROACH TYPE N(30S)
2. STRUCTURE APPROACH TYPE R(30S)
3. CONCRETE BARRIER TYPE 732SW (MOD) W/ CHAIN LINK RAILING TYPE 7 (MOD)
4. 18" X 26" EX FUTURE UTILITY OPENING
5. REMOVE EX BARRIER, SIDEWALK AND RAILING
6. BRIDGE DECK METHACRYLATE RESIN TREATMENT
7. SLOPE PAVING, H=1.5 : V=1.0
8. INFILL WALLS
9. CRASH WALLS
10. PAINT "BEAR VALLEY ROAD OVERHEAD" & YEAR COMPLETED
11. PAINT "BRIDGE NO. 54C0547"
12. SLOPE PAVING

✲ RAILWAY TRACK LIGHTING FIXTURES (NEW)
◕ DENOTES POINT OF MIN VERT CLR TO WIDENING
⊕ DENOTES POINT OF MIN VERT CLR TO EXISTING
—·—·— DENOTES Exist STRUCTURE

CURVE DATA

R = 3000.00'
Δ = 10°38'58"
T = 279.61'
L = 557.60'

NOTES:

1. FOR "INDEX TO PLANS" AND "STANDARD PLANS", SEE "INDEX TO PLANS" SHEET.
2. FOR GENERAL NOTES, SEE "FOUNDATION PLAN" SHEET.

95% PLANS NOT FOR CONSTRUCTION

	BY	CHECKED
DESIGN	T. Osterkamp	M. Iley
DETAILS	R. Liptak	M. Iley
QUANTITIES	R. Liptak	M. Iley

LOAD & RESISTANCE FACTOR DESIGN — LIVE LOADING: HL93 W/"LOW-BOY"; PERMIT DESIGN VEHICLE
LAYOUT — BY — CHECKED
SPECIFICATIONS — BY — PLANS AND SPECS COMPARED

PREPARED FOR THE CITY OF VICTORVILLE

T. Osterkamp
PROJECT ENGINEER

BRIDGE NO. 54C0547
POST MILES

BEAR VALLEY ROAD OVERHEAD
GENERAL PLAN No. 1

DESIGN GENERAL PLAN SHEET (ENGLISH) (REV. 03/14/12)

ORIGINAL SCALE IN INCHES FOR REDUCED PLANS 0 1 2 3

UNIT:
PROJECT NUMBER & PHASE: CONTRACT NO.:

DISREGARD PRINTS BEARING EARLIER REVISION DATES

REVISION DATES: X

SHEET 1 OF 27

FILE => J:\2007_Bear_Vly_BR_Widen\517\2007GP01.dgn

USERNAME => unknown DATE PLOTTED => $DATE TIME PLOTTED => 5:02:59 PM

DIST	COUNTY	ROUTE	POST MILES TOTAL PROJECT	SHEET No	TOTAL SHEETS
08	SB	CR		57	82

REGISTERED CIVIL ENGINEER DATE

PLANS APPROVAL DATE

REGISTERED PROFESSIONAL ENGINEER T. OSTERKAMP No. C46783 Exp. 6/30/17 CIVIL STATE OF CALIFORNIA

The State of California or its officers or agents shall not be responsible for the accuracy or completeness of scanned copies of this plan sheet.

DOKKEN ENGINEERING
110 BLUE RAVINE ROAD, SUITE 200
FOLSOM, CA 95630

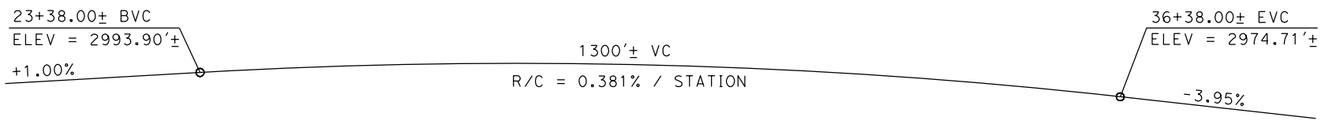

PROFILE GRADE - BEAR VALLEY ROAD

NO SCALE

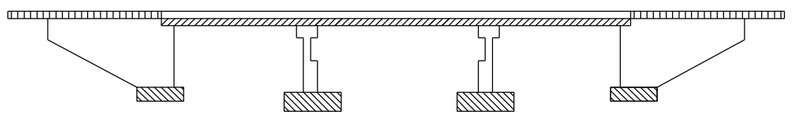

STRUCTURAL CONCRETE, BRIDGE

STRUCTURAL CONCRETE, APPROACH SLAB

STRUCTURAL CONCRETE, BRIDGE FOOTING

PRECAST VOIDED SLAB

CONCRETE STRENGTH AND TYPE LIMITS

NO SCALE

INDEX TO PLANS

SHEET NO.	TITLE
1	GENERAL PLAN
2	INDEX TO PLANS
3	FOUNDATION PLAN
4	ABUTMENT 1 LAYOUT
5	ABUTMENT 4 LAYOUT
6	ABUTMENT DETAILS
7	BENT LAYOUT NO. 1
8	BENT LAYOUT NO. 2
9	BENT DETAILS NO. 1
10	BENT DETAILS NO. 2
11	BENT DETAILS NO. 3
12	TYPICAL SECTION
13	GIRDER LAYOUT
14	PC/PS CONCRETE SLAB GIRDER
15	MISCELLANEOUS DETAILS
16	CONSTRUCTION SEQUENCE
17	SUB HORIZONTAL GROUND ANCHOR DETAILS
18	STRUCTURE APPROACH TYPE N(30S)
19	STRUCTURE APPROACH TYPE R(30S)
20	STRUCTURE APPROACH DRAINAGE DETAILS
21	SLOPE PAVING - FULL SLOPE
22	CONCRETE BARRIER TYPE 732SW No. 1
23	CONCRETE BARRIER TYPE 732SW No. 2
24	LOG OF TEST BORINGS NO. 1
25	LOG OF TEST BORINGS NO. 2
26	LOG OF TEST BORINGS NO. 3
27	(AS BUILT) LOG OF TEST BORINGS

STANDARD PLANS DATED 2015

Sheet No.	Title
A3A	ABBREVIATIONS (SHEET 1 OF 3)
A3B	ABBREVIATIONS (SHEET 2 OF 3)
A3C	ABBREVIATIONS (SHEET 3 OF 3)
A10A	LEGEND - LINES AND SYMBOLS (SHEET 1 OF 5)
A10B	LEGEND - LINES AND SYMBOLS (SHEET 2 OF 5)
A10C	LEGEND - LINES AND SYMBOLS (SHEET 3 OF 5)
A10D	LEGEND - LINES AND SYMBOLS (SHEET 4 OF 5)
A10E	LEGEND - LINES AND SYMBOLS (SHEET 5 OF 5)
A10F	LEGEND - SOIL (SHEET 1 OF 2)
A10G	LEGEND - SOIL (SHEET 2 OF 2)
A10H	LEGEND - ROCK
A62C	LIMITS OF PAYMENT FOR EXCAVATION AND BACKFILL BRIDGE
B0-1	BRIDGE DETAILS
B0-3	BRIDGE DETAILS
B0-5	BRIDGE DETAILS
B0-13	BRIDGE DETAILS
B2-5	PILE DETAILS CLASS 90 AND CLASS 140
B6-21	JOINT SEALS (MAXIMUM MOVEMENT RATING = 2")
B7-6	DECK DRAINS TYPES D-1 AND D-2
B11-7	CHAIN LINK RAILING

STANDARD PLAN SHEET No.

DETAIL No.

95% PLANS NOT FOR CONSTRUCTION

USERNAME => untitled DATE PLOTTED => $DATE TIME PLOTTED => 5:03:00 PM

DESIGN OVERSIGHT

SIGN OFF DATE

	BY	CHECKED
DESIGN	T. Osterkamp	M. Iley
DETAILS	R. Liptak	M. Iley
QUANTITIES	R. Liptak	M. Iley

PREPARED FOR THE **CITY OF VICTORVILLE**

T. Osterkamp
PROJECT ENGINEER

BRIDGE NO. 54C0547
POST MILES

BEAR VALLEY ROAD OVERHEAD
INDEX TO PLANS

DESIGN DETAIL SHEET (ENGLISH) (REV. 03/14/12)

ORIGINAL SCALE IN INCHES FOR REDUCED PLANS 0 1 2 3

UNIT:
PROJECT NUMBER & PHASE:
CONTRACT NO.:

DISREGARD PRINTS BEARING EARLIER REVISION DATES

REVISION DATES: X

SHEET 2 OF 27

FILE => J:\2007_Bear_Vly_BR_Widen\517\2007INDX.dgn

DIST	COUNTY	ROUTE	POST MILES TOTAL PROJECT	SHEET No	TOTAL SHEETS
08	SB	CR		58	82

REGISTERED CIVIL ENGINEER DATE

PLANS APPROVAL DATE

The State of California or its officers or agents shall not be responsible for the accuracy or completeness of scanned copies of this plan sheet.

REGISTERED PROFESSIONAL ENGINEER T. OSTERKAMP No. C46783 Exp. 6/30/17 CIVIL STATE OF CALIFORNIA

DOKKEN ENGINEERING
110 BLUE RAVINE ROAD, SUITE 200
FOLSOM, CA 95630

PLAN

1" = 20'

CURVE DATA

R = 3000.00'
△ = 10°38'58"
T = 279.61'
L = 557.60'

LEGEND

DENOTES BOTTOM OF FOOTING ELEV

DENOTES EX STRUCTURE

(1) POI "BVR" LINE 29+50.27 = BNSF Sta 2163+95.30
RR/MP: 41.6

(2) POI "BVR" LINE 29+64.79 = BNSF Sta 2163+95.30
RR/MP: 41.6

GENERAL NOTES
LOAD AND RESISTANCE FACTOR DESIGN

DESIGN:
AASHTO LRFD Bridge Design Specifications, 6th edition
with California Amendments v. 6

SEISMIC DESIGN:
Caltrans Seismic Design Criteria (SDC), Version 1.7, April 2013

DEAD LOAD:
Includes 35 psf for future wearing surface.

LIVE LOADING:
HL93 and permit design load.

SEISMIC LOADING:
Soil profile type D : Vs30 = 280 m/s
Magnitude group (6.5 ±0.25)
Peak Ground Acceleration 0.54g

CONCRETE:
fy = 60 ksi
f'c = 3.6 ksi
n = 8

SPREAD FOOTING DATA TABLE

Support Location	Service Permissible Net Contact Stress (Settlement) (ksf)	Strength/Construction Factored Gross Nominal Bearing Resistance ϕ_b = 0.45 (ksf)	Extreme Event Factored Gross Nominal Bearing Resistance ϕ_b = 1.00 (ksf)
Abut 1	10	31.3	N/A
Bent 2	7.9	20.15	44.7
Bent 3	7.9	20.15	44.7
Abut 4	10	31.3	N/A

95% PLANS NOT FOR CONSTRUCTION

TIME PLOTTED => 5:03:00 PM

USERNAME => untitled DATE PLOTTED => $DATE

DESIGN OVERSIGHT

SIGN OFF DATE

	BY	CHECKED
DESIGN	T. Osterkamp	M. Iley
DETAILS	R. Liptak	M. Iley
QUANTITIES	R. Liptak	M. Iley

PREPARED FOR THE
CITY OF VICTORVILLE

T. Osterkamp
PROJECT ENGINEER

BRIDGE NO. 54C0547
POST MILES

BEAR VALLEY ROAD OVERHEAD
FOUNDATION PLAN

DESIGN DETAIL SHEET (ENGLISH) (REV. 03/14/12)

ORIGINAL SCALE IN INCHES FOR REDUCED PLANS 0 1 2 3

UNIT:
PROJECT NUMBER & PHASE:
CONTRACT NO.:

DISREGARD PRINTS BEARING EARLIER REVISION DATES

REVISION DATES x

SHEET 3 OF 27

FILE => J:\2007_Bear_Vly_BR_Widen\517\2007FP01.dgn

DIST	COUNTY	ROUTE	POST MILES TOTAL PROJECT	SHEET No	TOTAL SHEETS
08	SB	CR		59	82

REGISTERED CIVIL ENGINEER DATE

PLANS APPROVAL DATE

REGISTERED PROFESSIONAL ENGINEER T. OSTERKAMP No. C46783 Exp. 6/30/17 CIVIL STATE OF CALIFORNIA

The State of California or its officers or agents shall not be responsible for the accuracy or completeness of scanned copies of this plan sheet.

DOKKEN ENGINEERING
110 BLUE RAVINE ROAD, SUITE 200
FOLSOM, CA 95630

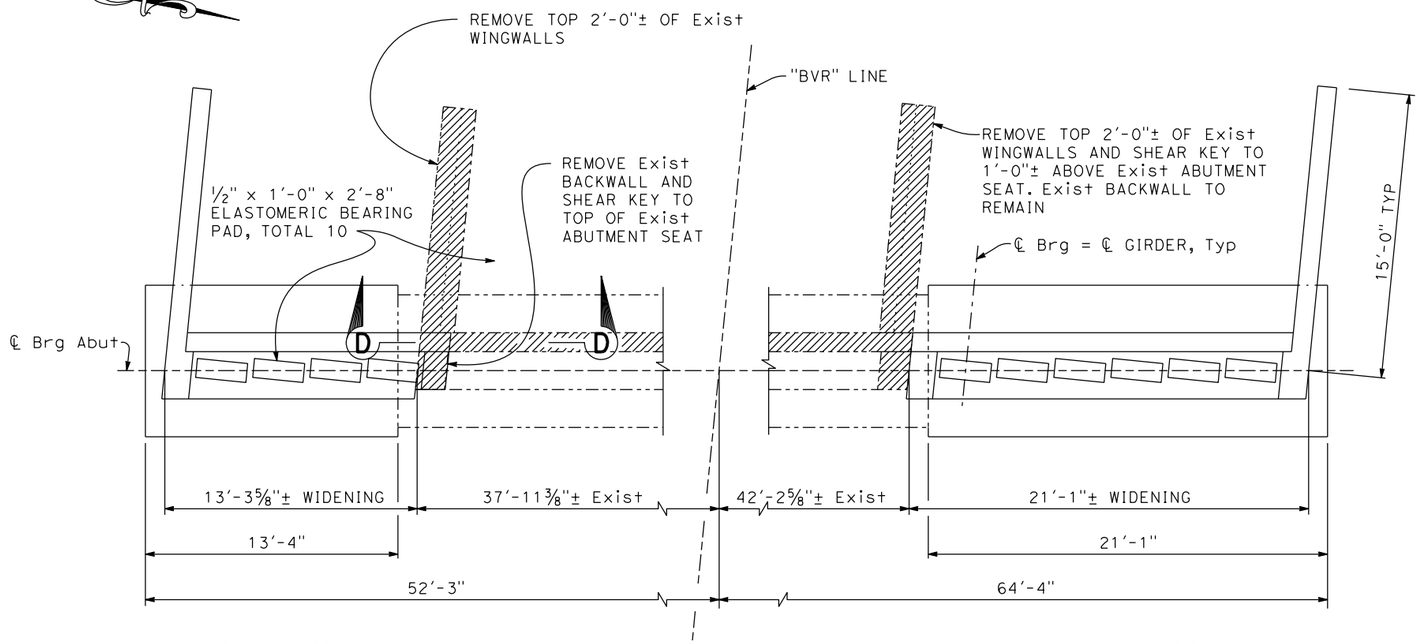

PLAN

1/4" = 1'-0"

(FOR SECTION D-D, SEE "ABUTMENT DETAILS" SHEET)

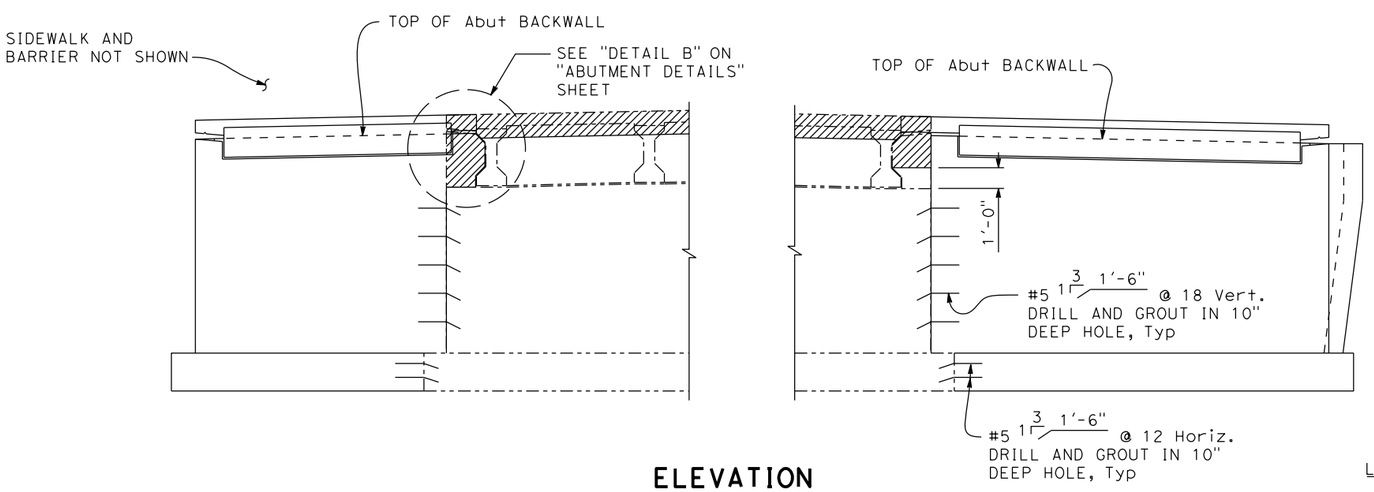

ELEVATION

1/4" = 1'-0"

LEGEND:

- - - - - - DENOTES EX STRUCTURE

DENOTES CONCRETE REMOVAL

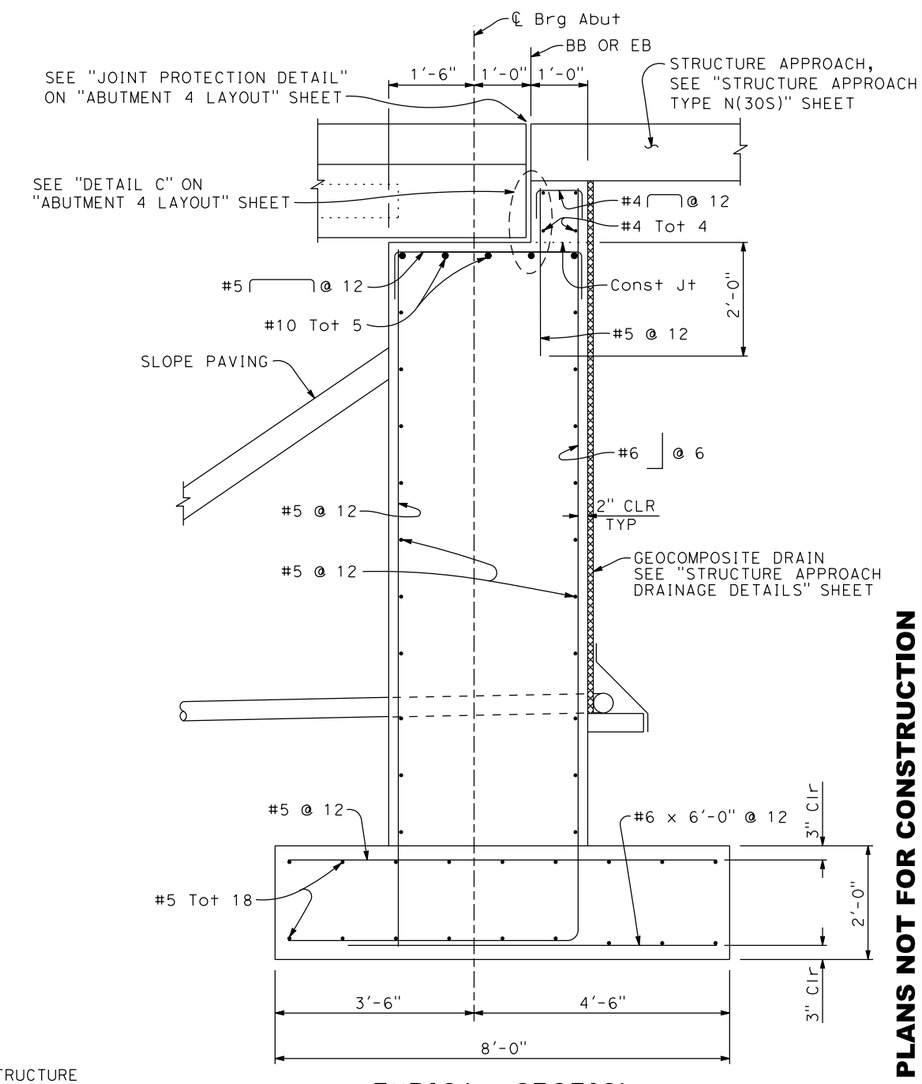

TYPICAL SECTION

3/4" = 1'-0"

95% PLANS NOT FOR CONSTRUCTION

USERNAME => untitled DATE PLOTTED => $DATE TIME PLOTTED => 5:03:01 PM

DESIGN	BY T. Osterkamp	CHECKED M. Iley	
DETAILS	BY R. Liptak	CHECKED M. Iley	
QUANTITIES	BY R. Liptak	CHECKED M. Iley	

DESIGN OVERSIGHT

SIGN OFF DATE

PREPARED FOR THE CITY OF VICTORVILLE

T. Osterkamp
PROJECT ENGINEER

BRIDGE NO. 54C0547
POST MILES

BEAR VALLEY ROAD OVERHEAD
ABUTMENT 1 LAYOUT

DESIGN DETAIL SHEET (ENGLISH) (REV. 03/14/12)

ORIGINAL SCALE IN INCHES FOR REDUCED PLANS 0 1 2 3

UNIT:
PROJECT NUMBER & PHASE: CONTRACT NO.:

DISREGARD PRINTS BEARING EARLIER REVISION DATES

REVISION DATES: x

SHEET 4 OF 27

FILE => J:\2007_Bear_Vly_BR_Widen\517\2007AL1.dgn

DIST	COUNTY	ROUTE	POST MILES TOTAL PROJECT	SHEET No	TOTAL SHEETS
08	SB	CR		60	82

REGISTERED CIVIL ENGINEER DATE

PLANS APPROVAL DATE

REGISTERED PROFESSIONAL ENGINEER T. OSTERKAMP No. C46783 Exp. 6/30/17 CIVIL STATE OF CALIFORNIA

The State of California or its officers or agents shall not be responsible for the accuracy or completeness of scanned copies of this plan sheet.

DOKKEN ENGINEERING
110 BLUE RAVINE ROAD, SUITE 200
FOLSOM, CA 95630

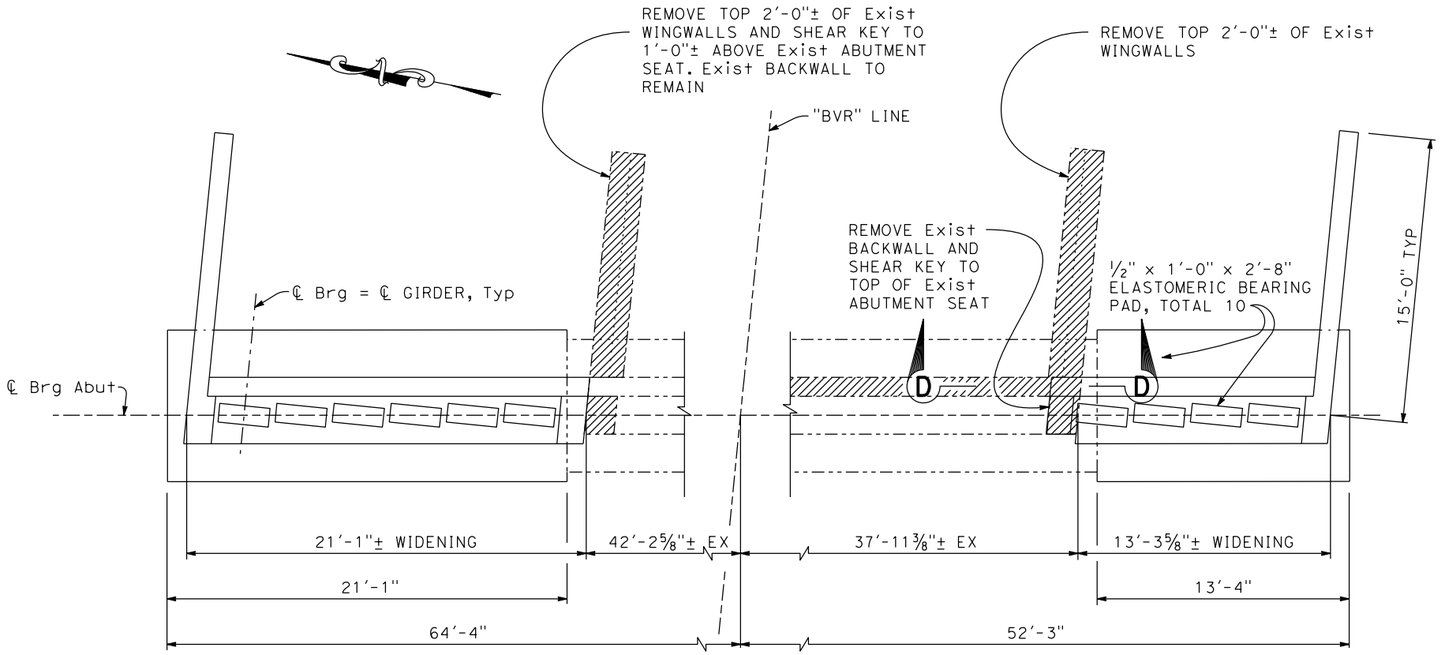

PLAN

¼" = 1'-0"

(FOR SECTION D-D, SEE "ABUTMENT DETAILS" SHEET)

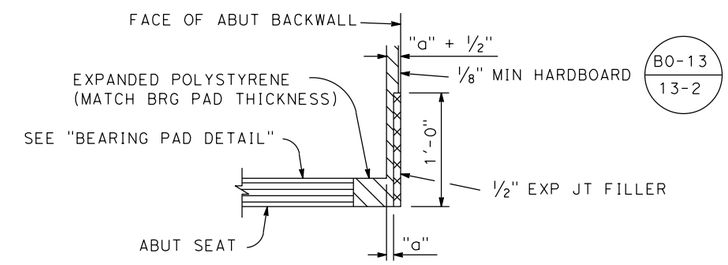

DETAIL C

NO SCALE

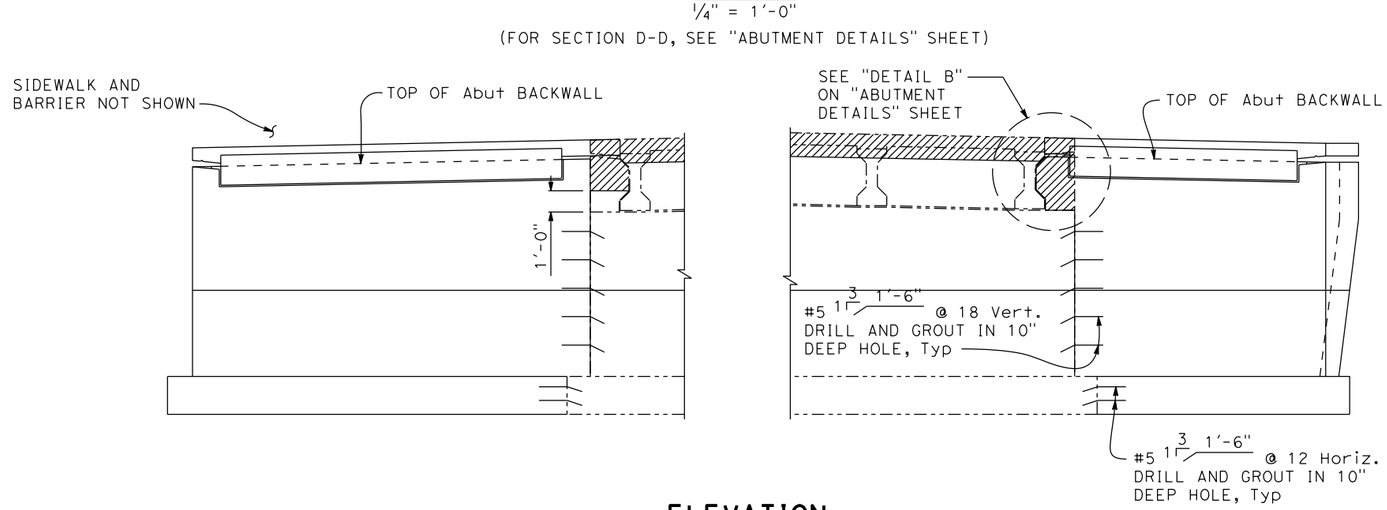

ELEVATION

¼" = 1'-0"

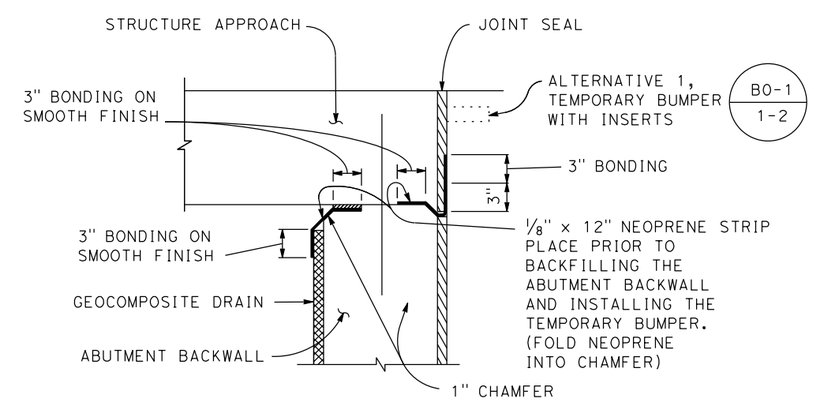

JOINT PROTECTION DETAIL

NO SCALE

LEGEND:

- - - - - - DENOTES EX STRUCTURE

DENOTES CONCRETE REMOVAL

95% PLANS NOT FOR CONSTRUCTION

USERNAME => unknown DATE PLOTTED => $DATE TIME PLOTTED => 5:03:02 PM

DESIGN OVERSIGHT

SIGN OFF DATE

	BY	CHECKED
DESIGN	T. Osterkamp	M. Iley
DETAILS	R. Liptak	M. Iley
QUANTITIES	R. Liptak	M. Iley

PREPARED FOR THE **CITY OF VICTORVILLE**

T. Osterkamp
PROJECT ENGINEER

BRIDGE NO. 54C0547
POST MILES

BEAR VALLEY ROAD OVERHEAD
ABUTMENT 4 LAYOUT

DESIGN DETAIL SHEET (ENGLISH) (REV. 03/14/12)

ORIGINAL SCALE IN INCHES FOR REDUCED PLANS 0 1 2 3

UNIT:
PROJECT NUMBER & PHASE: CONTRACT NO.:

DISREGARD PRINTS BEARING EARLIER REVISION DATES

REVISION DATES x

SHEET 5 OF 27

FILE => J:\2007_Bear_Vly_BR_Widen\517\2007AL2.dgn

DIST	COUNTY	ROUTE	POST MILES TOTAL PROJECT	SHEET No	TOTAL SHEETS
08	SB	CR		61	82

REGISTERED CIVIL ENGINEER DATE

PLANS APPROVAL DATE

The State of California or its officers or agents shall not be responsible for the accuracy or completeness of scanned copies of this plan sheet.

REGISTERED PROFESSIONAL ENGINEER T. OSTERKAMP No. C46783 Exp. 6/30/17 CIVIL STATE OF CALIFORNIA

DOKKEN ENGINEERING
110 BLUE RAVINE ROAD, SUITE 200
FOLSOM, CA 95630

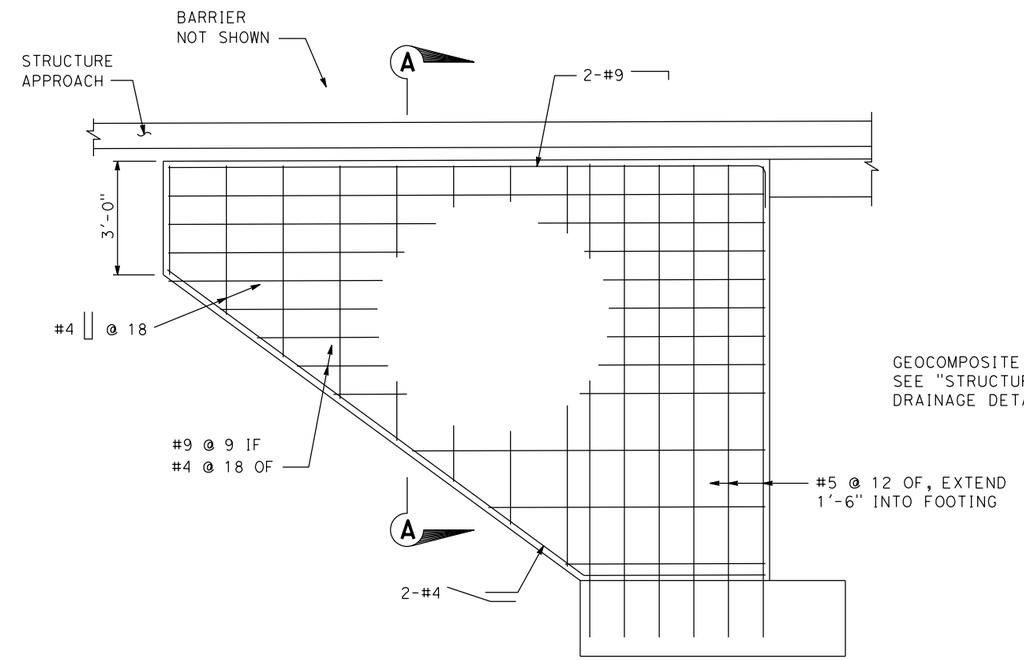

WINGWALL ELEVATION

1/2" = 1'-0"

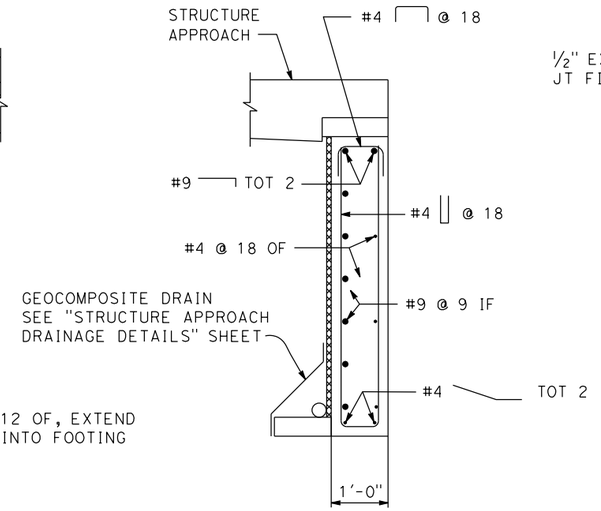

SECTION A-A

3/4" = 1'-0"

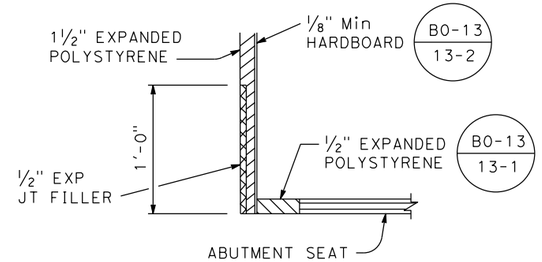

DETAIL A

NO SCALE

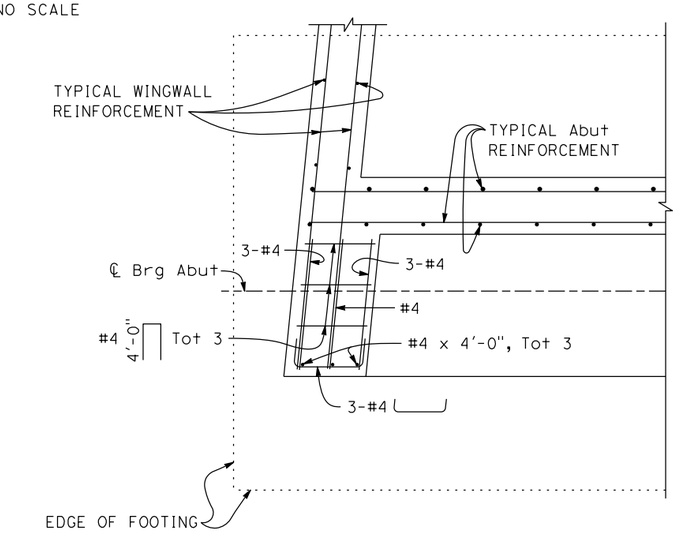

SECTION B-B

3/4" = 1'-0"

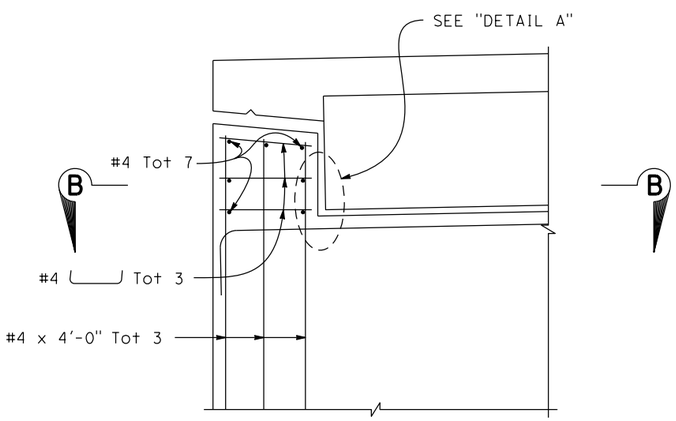

EXTERNAL SHEAR KEY

1" = 1'-0"

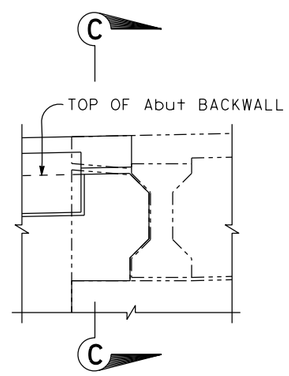

DETAIL B

1/2" = 1'-0"

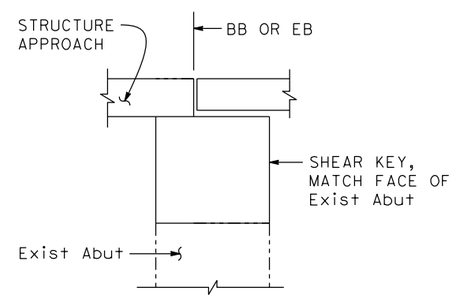

SECTION C-C

1/2" = 1'-0"

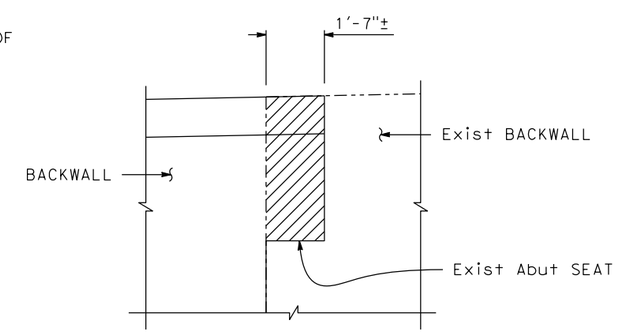

SECTION D-D

1/2" = 1'-0"

95% PLANS NOT FOR CONSTRUCTION

DESIGN OVERSIGHT	DESIGN	BY T. Osterkamp	CHECKED M. Iley
SIGN OFF DATE	DETAILS	BY R. Liptak	CHECKED M. Iley
	QUANTITIES	BY R. Liptak	CHECKED M. Iley

PREPARED FOR THE CITY OF VICTORVILLE

T. Osterkamp
PROJECT ENGINEER

BRIDGE NO. 54C0547
POST MILES

BEAR VALLEY ROAD OVERHEAD
ABUTMENT DETAILS

DESIGN DETAIL SHEET (ENGLISH) (REV. 03/14/12)

ORIGINAL SCALE IN INCHES FOR REDUCED PLANS 0 1 2 3

UNIT:
PROJECT NUMBER & PHASE: CONTRACT NO.:

DISREGARD PRINTS BEARING EARLIER REVISION DATES

REVISION DATES: x

SHEET 6 OF 27

FILE => J:\2007_Bear_Vly_BR_Widen\517\2007AD1.dgn

USERNAME => untitled DATE PLOTTED => $DATE TIME PLOTTED => 5:03:02 PM

DIST	COUNTY	ROUTE	POST MILES TOTAL PROJECT	SHEET No	TOTAL SHEETS
08	SB	CR		62	82

REGISTERED CIVIL ENGINEER DATE

PLANS APPROVAL DATE

REGISTERED PROFESSIONAL ENGINEER T. OSTERKAMP No. C46783 Exp. 6/30/17 CIVIL STATE OF CALIFORNIA

The State of California or its officers or agents shall not be responsible for the accuracy or completeness of scanned copies of this plan sheet.

DOKKEN ENGINEERING
110 BLUE RAVINE ROAD, SUITE 200
FOLSOM, CA 95630

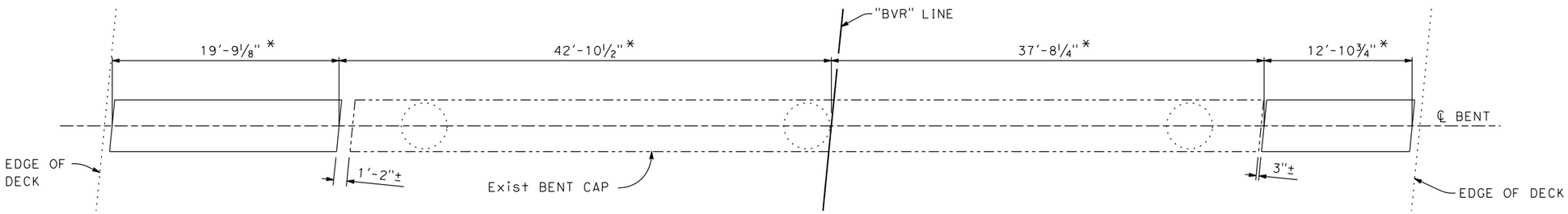

* MEASURED ALONG ℄ BENT

SECTION A-A

3/16" = 1'-0"

NOTES:

1. For Sections B-B, C-C, and D-D, see "BENT LAYOUT NO. 2" sheet.

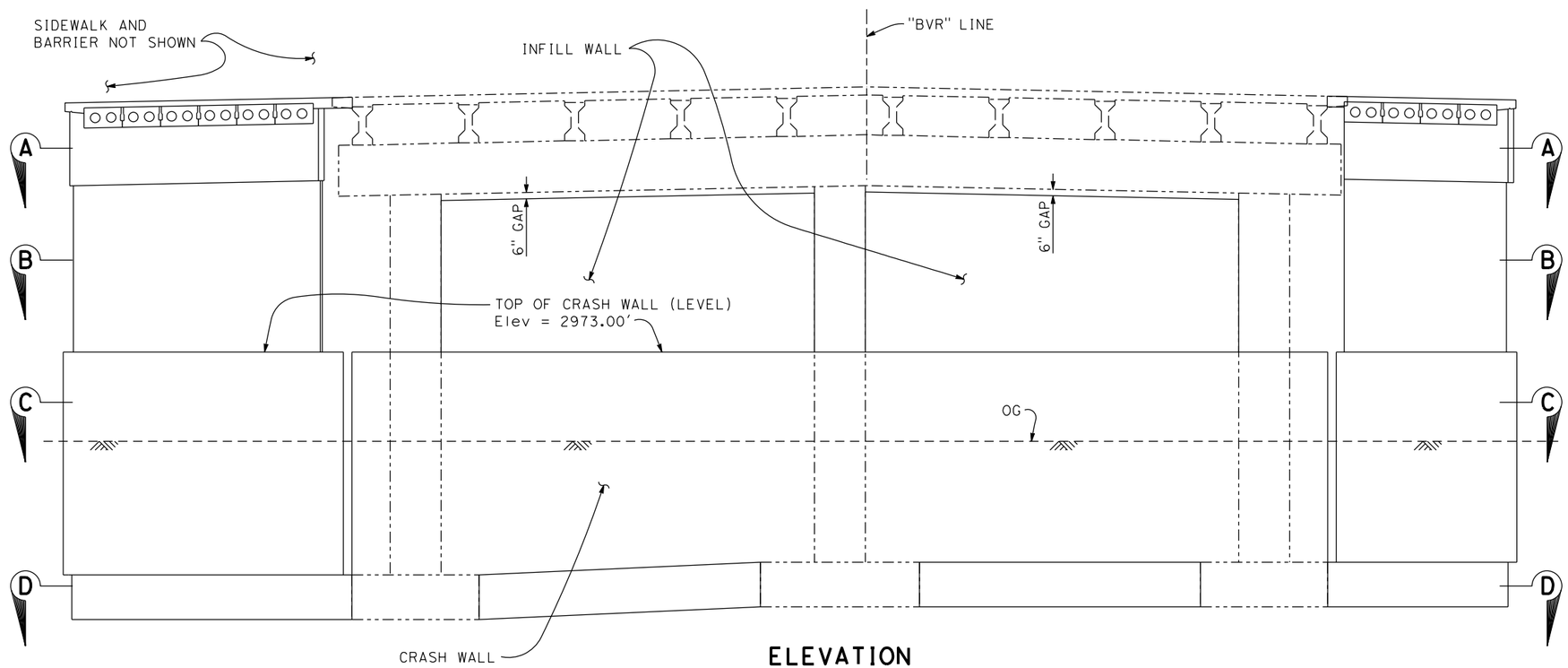

ELEVATION

3/16" = 1'-0"

BENT 2 SHOWN, MIRROR BENT 3 SIMILAR.

LEGEND

——-——- DENOTES EX STRUCTURE

95% PLANS NOT FOR CONSTRUCTION

USERNAME => unfitled DATE PLOTTED => $DATE TIME PLOTTED => 5:03:03 PM

DESIGN OVERSIGHT

SIGN OFF DATE

	BY	CHECKED
DESIGN	T. Osterkamp	M. Iley
DETAILS	R. Liptak	M. Iley
QUANTITIES	R. Liptak	M. Iley

PREPARED FOR THE CITY OF VICTORVILLE

T. Osterkamp
PROJECT ENGINEER

BRIDGE NO. 54C0547
POST MILES

BEAR VALLEY ROAD OVERHEAD
BENT LAYOUT NO. 1

DESIGN DETAIL SHEET (ENGLISH) (REV. 03/14/12)

ORIGINAL SCALE IN INCHES FOR REDUCED PLANS 0 1 2 3

UNIT:
PROJECT NUMBER & PHASE: CONTRACT NO.:

DISREGARD PRINTS BEARING EARLIER REVISION DATES

REVISION DATES x

SHEET 7 OF 27

FILE => J:\2007_Bear_Vly_BR_Widen\517\2007BL1.dgn

DIST	COUNTY	ROUTE	POST MILES TOTAL PROJECT	SHEET No	TOTAL SHEETS
08	SB	CR		63	82

REGISTERED CIVIL ENGINEER DATE

PLANS APPROVAL DATE

REGISTERED PROFESSIONAL ENGINEER T. OSTERKAMP No. C46783 Exp. 6/30/17 CIVIL STATE OF CALIFORNIA

The State of California or its officers or agents shall not be responsible for the accuracy or completeness of scanned copies of this plan sheet.

DOKKEN ENGINEERING
110 BLUE RAVINE ROAD, SUITE 200
FOLSOM, CA 95630

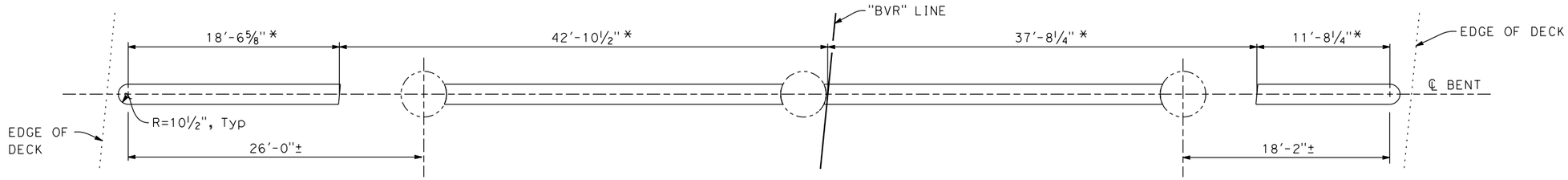

SECTION B-B

3/16" = 1'-0"

* MEASURED ALONG ℄ BENT

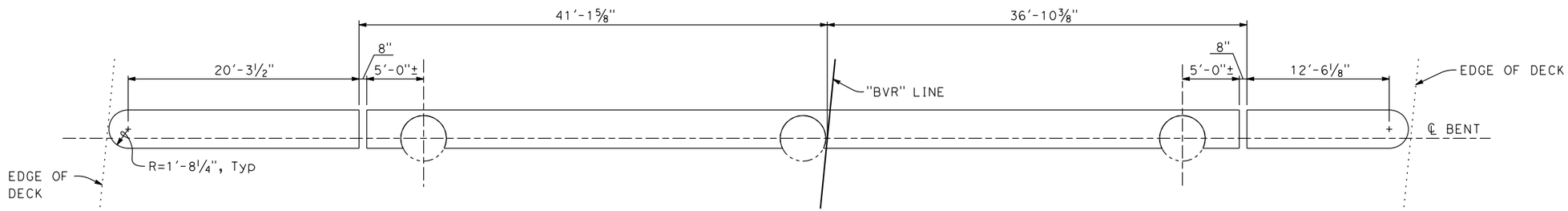

SECTION C-C

3/16" = 1'-0"

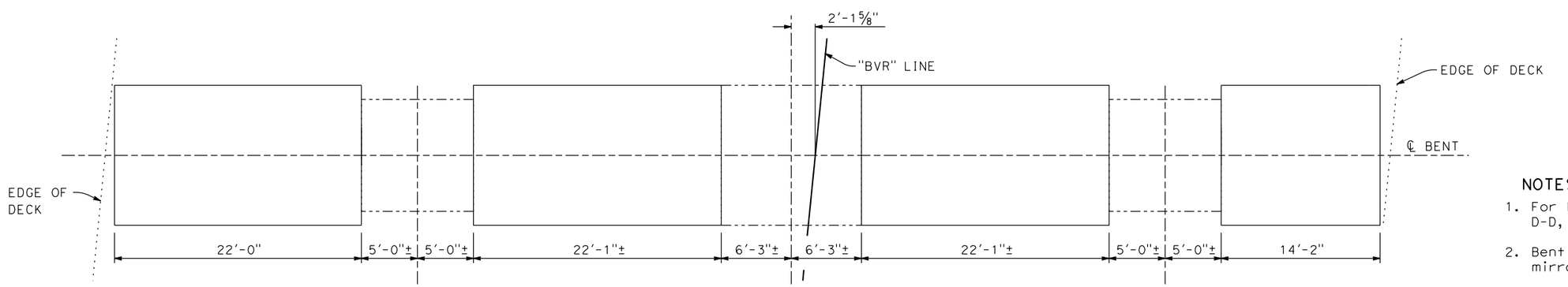

SECTION D-D

3/16" = 1'-0"

NOTES:

1. For location of Sections B-B, C-C, and D-D, see "BENT LAYOUT NO. 1" sheet.
2. Bent 2 shown, Bent 3 similar as mirror about ℄ bent.

LEGEND

—·—·— DENOTES Exist STRUCTURE

95% PLANS NOT FOR CONSTRUCTION

USERNAME => untitled DATE PLOTTED => $DATE TIME PLOTTED => 5:03:03 PM

DESIGN OVERSIGHT

SIGN OFF DATE

	BY	CHECKED
DESIGN	T. Osterkamp	M. Iley
DETAILS	R. Liptak	M. Iley
QUANTITIES	R. Liptak	M. Iley

PREPARED FOR THE **CITY OF VICTORVILLE**

T. Osterkamp
PROJECT ENGINEER

BRIDGE NO. 54C0547
POST MILES

BEAR VALLEY ROAD OVERHEAD
BENT LAYOUT NO. 2

DESIGN DETAIL SHEET (ENGLISH) (REV. 03/14/12)

ORIGINAL SCALE IN INCHES FOR REDUCED PLANS 0 1 2 3

UNIT:
PROJECT NUMBER & PHASE:
CONTRACT NO.:

DISREGARD PRINTS BEARING EARLIER REVISION DATES

REVISION DATES: x

SHEET 8 OF 27

FILE => J:\2007_Bear_Vly_BR_Widen\517\2007BL2.dgn

DIST	COUNTY	ROUTE	POST MILES TOTAL PROJECT	SHEET No	TOTAL SHEETS
08	SB	CR		64	82

REGISTERED CIVIL ENGINEER DATE

PLANS APPROVAL DATE

REGISTERED PROFESSIONAL ENGINEER T. OSTERKAMP No. C46783 Exp. 6/30/17 CIVIL STATE OF CALIFORNIA

The State of California or its officers or agents shall not be responsible for the accuracy or completeness of scanned copies of this plan sheet.

DOKKEN ENGINEERING
110 BLUE RAVINE ROAD, SUITE 200
FOLSOM, CA 95630

LEGEND

—·—·— DENOTES EXIST STRUCTURE

NOTES:

1. For Sections A-A and B-B, see "BENT DETAILS NO. 2" sheet.
2. For Sections C-C, D-D, E-E, F-F, G-G and H-H, see "BENT DETAILS NO. 3" sheet.

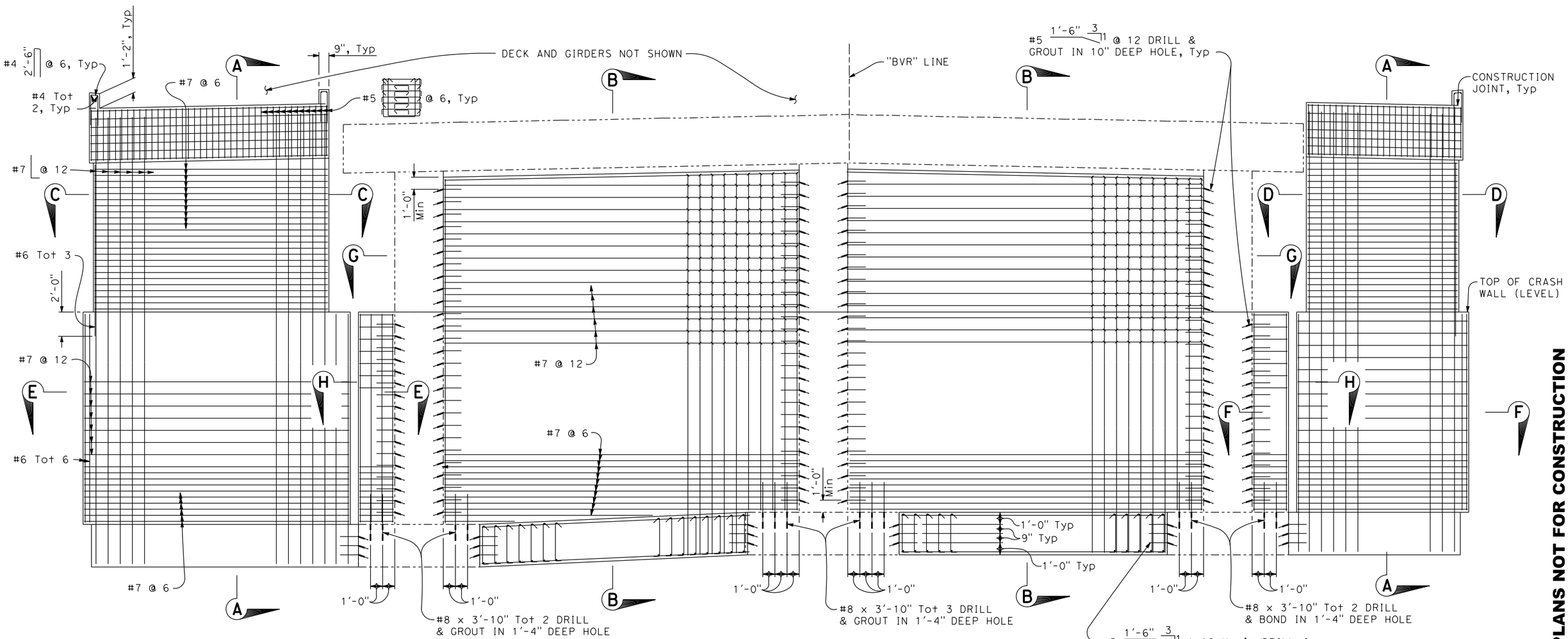

BENT ELEVATION

1/4" = 1'-0"

BENT 2 SHOWN, BENT 3 SIMILAR.

95% PLANS NOT FOR CONSTRUCTION

TIME PLOTTED => 5:03:03 PM

USERNAME => untitled DATE PLOTTED => $DATE

DESIGN OVERSIGHT

SIGN OFF DATE

	BY	CHECKED
DESIGN	T. Osterkamp	M. Iley
DETAILS	R. Liptak	M. Iley
QUANTITIES	R. Liptak	M. Iley

PREPARED FOR THE CITY OF VICTORVILLE

T. Osterkamp
PROJECT ENGINEER

BRIDGE NO. 54C0547
POST MILES

BEAR VALLEY ROAD OVERHEAD
BENT DETAILS NO. 1

DESIGN DETAIL SHEET (ENGLISH) (REV. 03/14/12)

ORIGINAL SCALE IN INCHES FOR REDUCED PLANS 0 1 2 3

UNIT:
PROJECT NUMBER & PHASE:
CONTRACT NO.:

DISREGARD PRINTS BEARING EARLIER REVISION DATES

REVISION DATES: X

SHEET 9 OF 27

FILE => J:\2007_Bear_Vly_BR_Widen\517\2007BD1.dgn

DIST	COUNTY	ROUTE	POST MILES TOTAL PROJECT	SHEET No	TOTAL SHEETS
08	SB	CR		65	82

REGISTERED CIVIL ENGINEER DATE

PLANS APPROVAL DATE

REGISTERED PROFESSIONAL ENGINEER T. OSTERKAMP No. C46783 Exp. 6/30/17 CIVIL STATE OF CALIFORNIA

The State of California or its officers or agents shall not be responsible for the accuracy or completeness of scanned copies of this plan sheet.

DOKKEN ENGINEERING
110 BLUE RAVINE ROAD, SUITE 200
FOLSOM, CA 95630

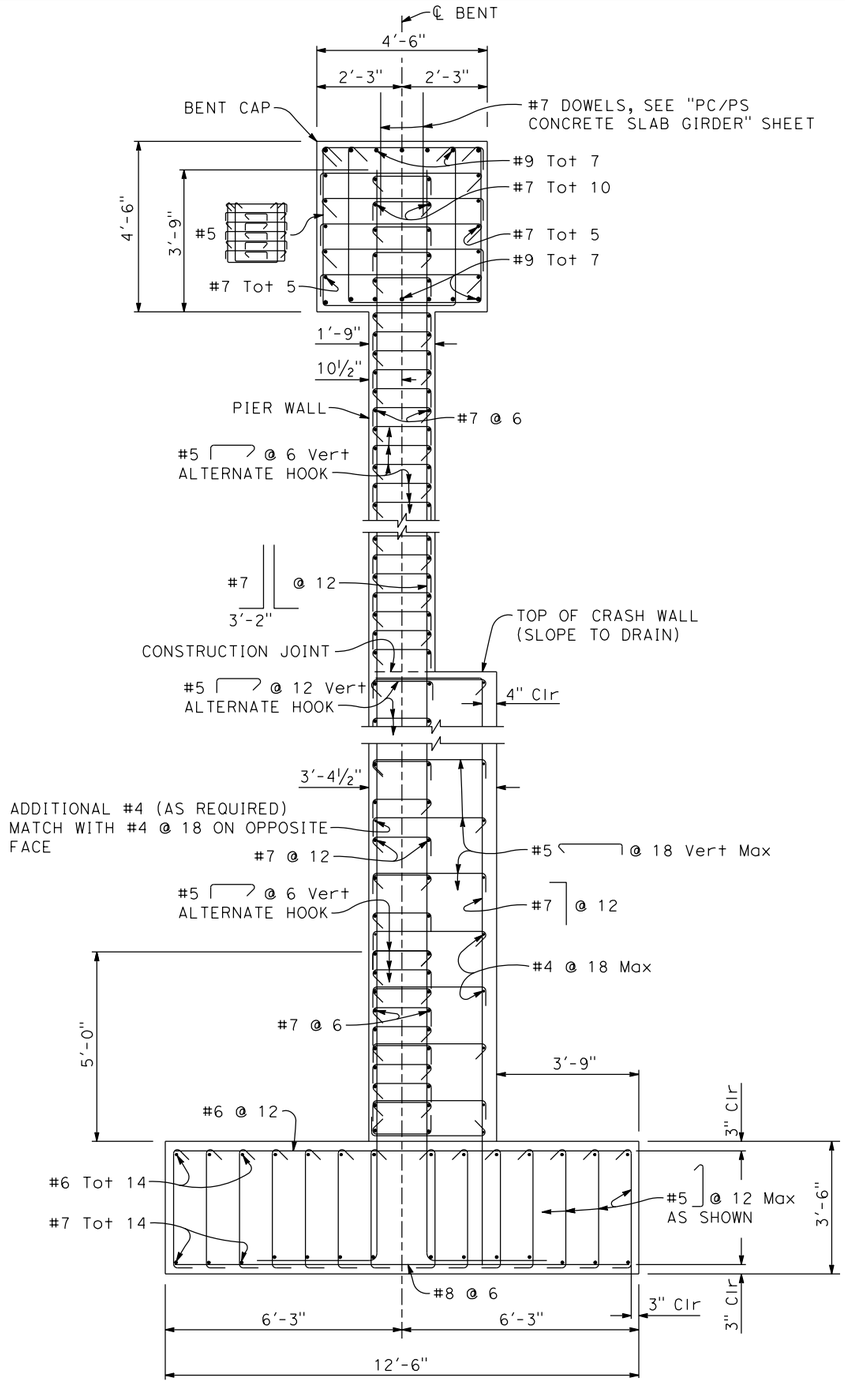

SECTION A-A

½" = 1'-0"

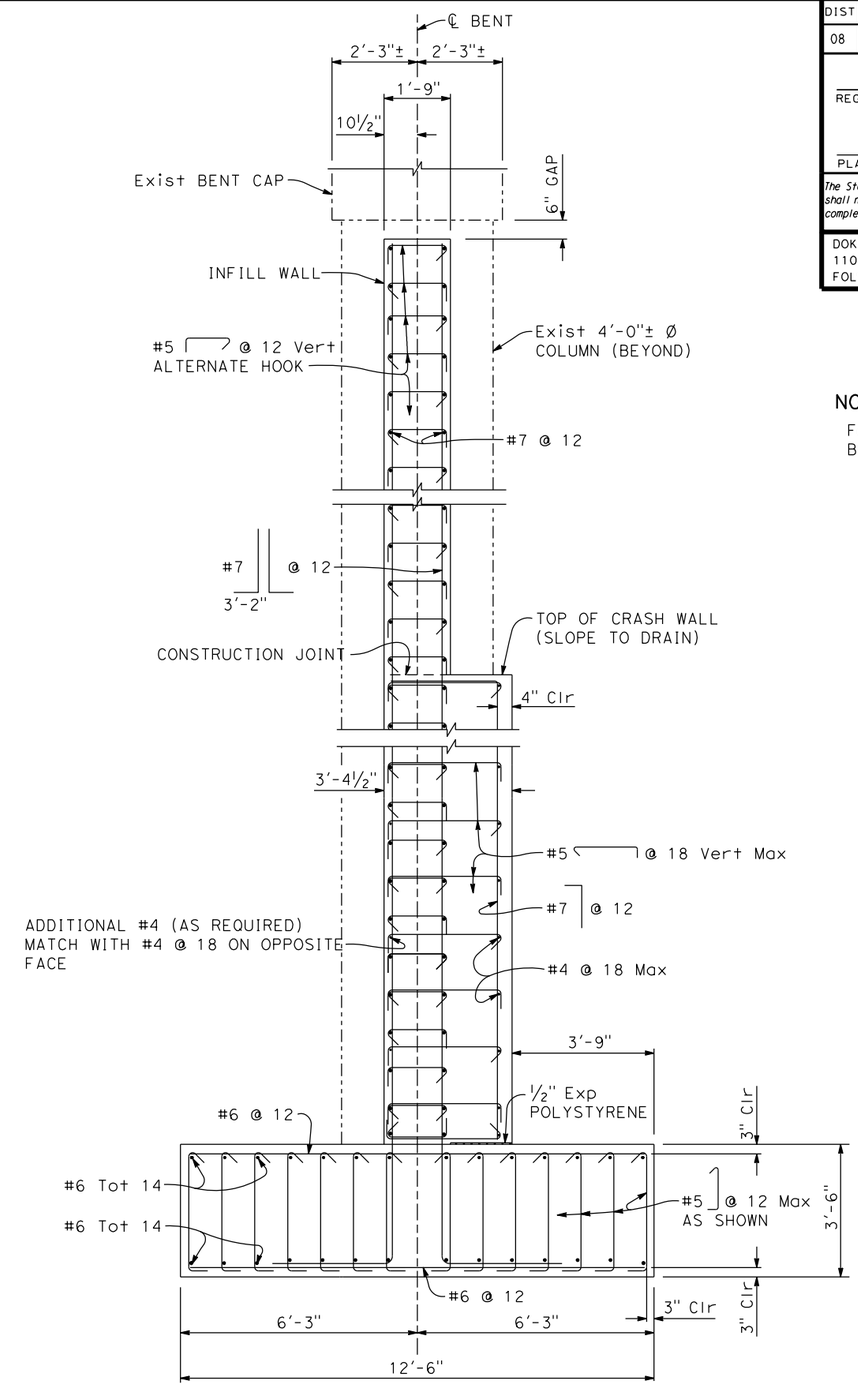

SECTION B-B

½" = 1'-0"

NOTE:

For location of Sections A-A and B-B, see "BENT DETAILS NO. 1" sheet.

LEGEND

——-——-—— DENOTES EXIST STRUCTURE

95% PLANS NOT FOR CONSTRUCTION

USERNAME => unfitled DATE PLOTTED => $DATE TIME PLOTTED => 5:03:04 PM

DESIGN OVERSIGHT

SIGN OFF DATE

	BY	CHECKED
DESIGN	T. Osterkamp	M. Iley
DETAILS	R. Liptak	M. Iley
QUANTITIES	R. Liptak	M. Iley

PREPARED FOR THE CITY OF VICTORVILLE

T. Osterkamp
PROJECT ENGINEER

BRIDGE NO. 54C0547
POST MILES

BEAR VALLEY ROAD OVERHEAD

BENT DETAILS NO. 2

DESIGN DETAIL SHEET (ENGLISH) (REV. 03/14/12)

ORIGINAL SCALE IN INCHES FOR REDUCED PLANS 0 1 2 3

UNIT:
PROJECT NUMBER & PHASE: CONTRACT NO.:

DISREGARD PRINTS BEARING EARLIER REVISION DATES

REVISION DATES x

SHEET 10 OF 27

FILE => J:\2007_Bear_Vly_BR_Widen\517\2007BD2.dgn

DIST	COUNTY	ROUTE	POST MILES TOTAL PROJECT	SHEET No	TOTAL SHEETS
08	SB	CR		66	82

REGISTERED CIVIL ENGINEER DATE

PLANS APPROVAL DATE

The State of California or its officers or agents shall not be responsible for the accuracy or completeness of scanned copies of this plan sheet.

REGISTERED PROFESSIONAL ENGINEER T. OSTERKAMP No. C46783 Exp. 6/30/17 CIVIL STATE OF CALIFORNIA

DOKKEN ENGINEERING
110 BLUE RAVINE ROAD, SUITE 200
FOLSOM, CA 95630

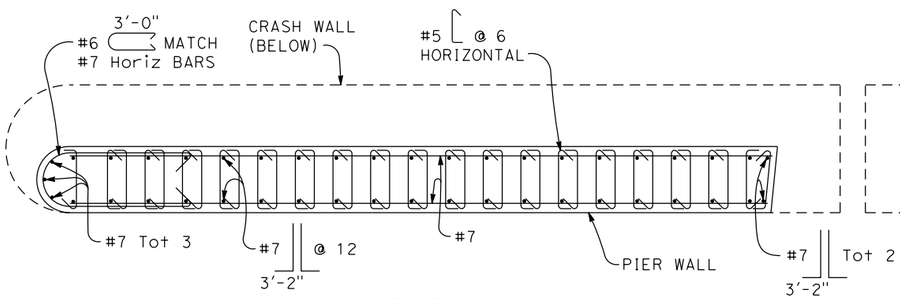

SECTION C-C

½" = 1'-0"

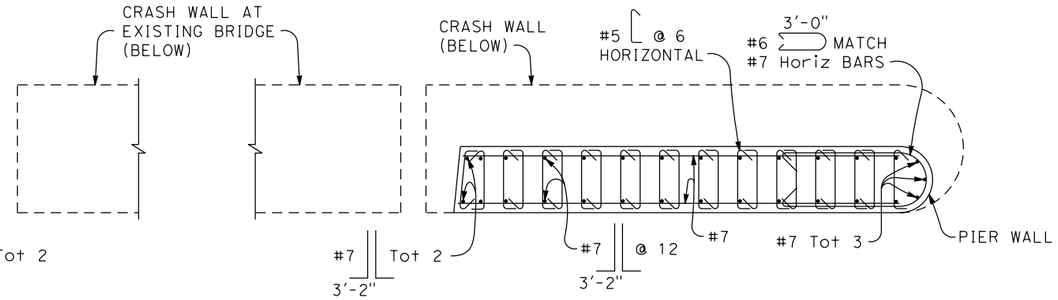

SECTION D-D

½" = 1'-0"

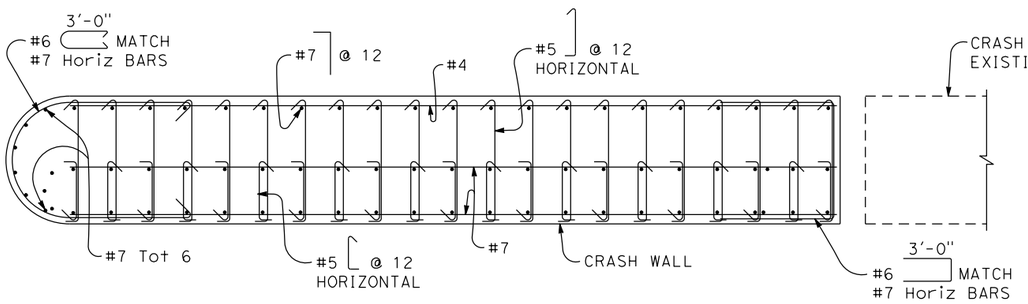

SECTION E-E

½" = 1'-0"

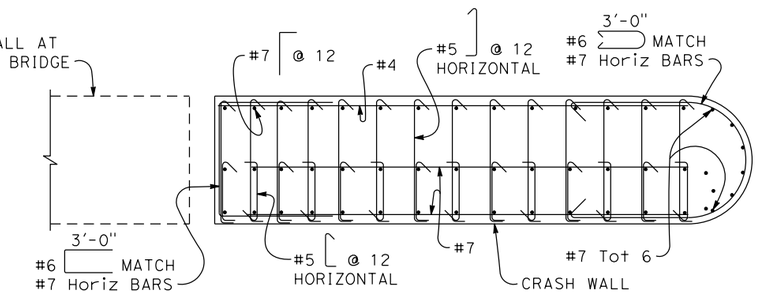

SECTION F-F

½" = 1'-0"

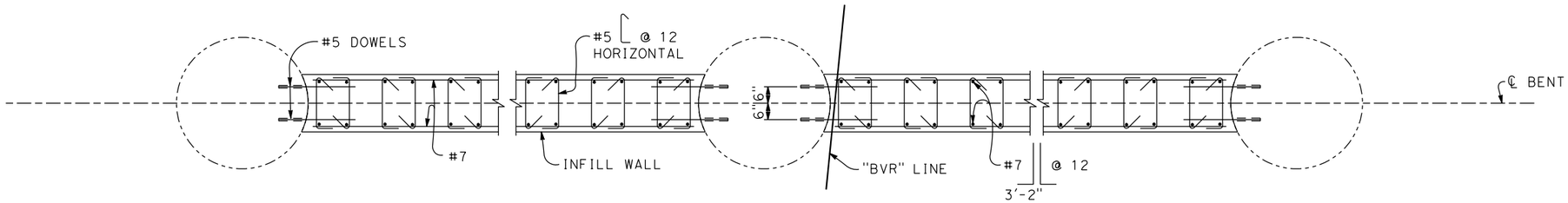

SECTION G-G

½" = 1'-0"

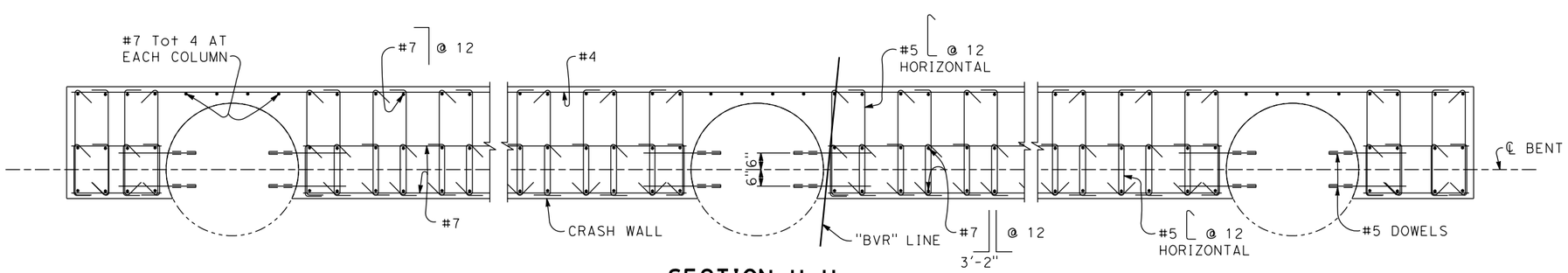

SECTION H-H

½" = 1'-0"

LEGEND

——-——- DENOTES EXIST STRUCTURE

NOTE:

For location of Sections C-C, D-D, E-E, F-F, G-G and H-H, see "BENT DETAILS NO. 1" sheet.

95% PLANS NOT FOR CONSTRUCTION

USERNAME => untitled DATE PLOTTED => $DATE TIME PLOTTED => 5:03:04 PM

DESIGN OVERSIGHT	DESIGN	BY T. Osterkamp	CHECKED M. Iley
SIGN OFF DATE	DETAILS	BY R. Liptak	CHECKED M. Iley
	QUANTITIES	BY R. Liptak	CHECKED M. Iley

PREPARED FOR THE **CITY OF VICTORVILLE**

T. Osterkamp
PROJECT ENGINEER

BRIDGE NO. 54C0547
POST MILES

BEAR VALLEY ROAD OVERHEAD
BENT DETAILS NO. 3

DESIGN DETAIL SHEET (ENGLISH) (REV. 03/14/12)

ORIGINAL SCALE IN INCHES FOR REDUCED PLANS 0 1 2 3

UNIT:
PROJECT NUMBER & PHASE:
CONTRACT NO.:

DISREGARD PRINTS BEARING EARLIER REVISION DATES

REVISION DATES: X

SHEET 11 OF 27

FILE => J:\2007_Bear_Vly_BR_Widen\517\2007BD3.dgn

DIST	COUNTY	ROUTE	POST MILES TOTAL PROJECT	SHEET No	TOTAL SHEETS
08	SB	CR		67	82

REGISTERED CIVIL ENGINEER DATE

PLANS APPROVAL DATE

The State of California or its officers or agents shall not be responsible for the accuracy or completeness of scanned copies of this plan sheet.

REGISTERED PROFESSIONAL ENGINEER T. OSTERKAMP No. C46783 Exp. 6/30/17 CIVIL STATE OF CALIFORNIA

DOKKEN ENGINEERING
110 BLUE RAVINE ROAD, SUITE 200
FOLSOM, CA 95630

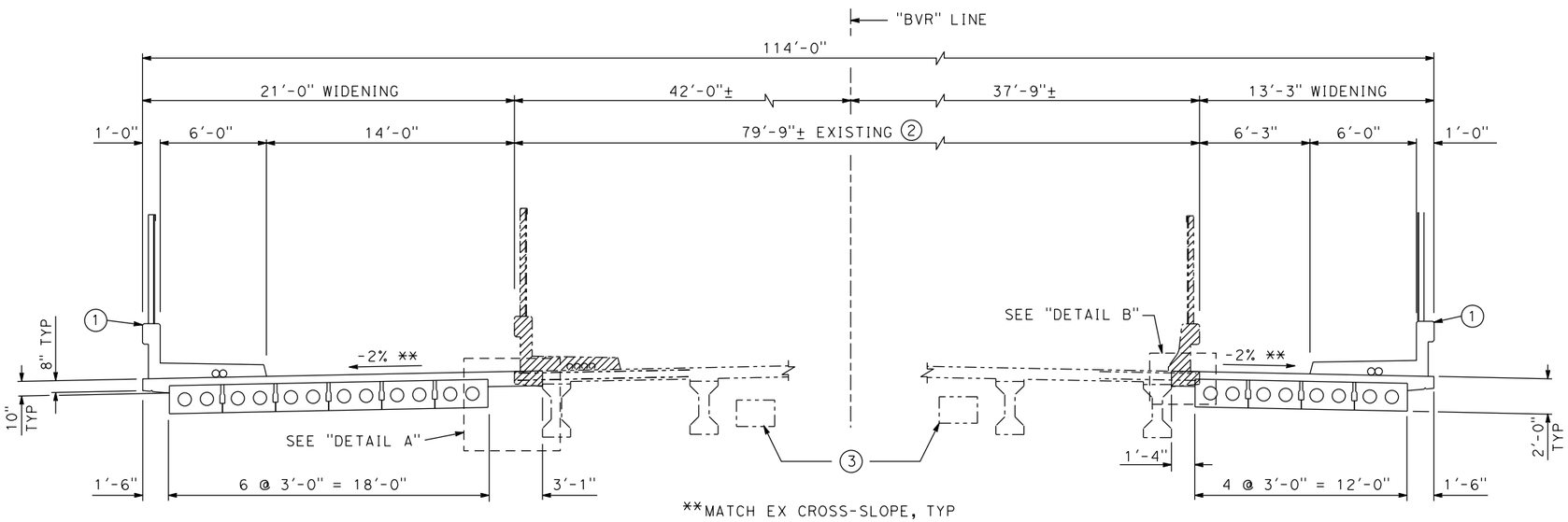

LEFT WIDEN

RIGHT WIDEN

TYPICAL SECTION

1/4" = 1'-0"

LEGEND:

1. CONCRETE BARRIER TYPE 732SW (MOD) W/ CHAIN LINK RAILING TYPE 7 (MOD)
2. BRIDGE DECK METHACRYLATE RESIN TREATMENT
3. 18" X 26" EX FUTURE UTILITY OPENINGS, TOT 2

REMOVE EX OVERHANG, BARRIER, SIDEWALK AND RAILING

DENOTES EX STRUCTURE

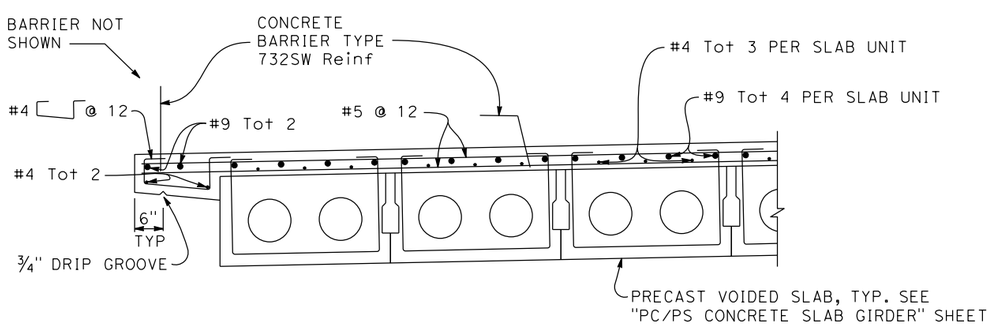

PART TYPICAL SECTION

3/4" = 1'-0"

LEFT WIDENING SHOWN, RIGHT WIDENING SIMILAR.

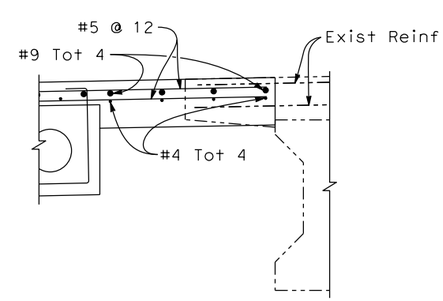

DETAIL A

3/4" = 1'-0"

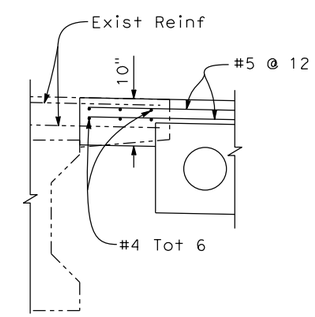

DETAIL B

3/4" = 1'-0"

95% PLANS NOT FOR CONSTRUCTION

USERNAME => unknown DATE PLOTTED => $DATE TIME PLOTTED => 5:03:05 PM

DESIGN OVERSIGHT			
SIGN OFF DATE			
DESIGN	BY T. Osterkamp	CHECKED M. Iley	
DETAILS	BY R. Liptak	CHECKED M. Iley	
QUANTITIES	BY R. Liptak	CHECKED M. Iley	

PREPARED FOR THE CITY OF VICTORVILLE

T. Osterkamp
PROJECT ENGINEER

BRIDGE NO. 54C0547
POST MILES

BEAR VALLEY ROAD OVERHEAD
TYPICAL SECTION

DESIGN DETAIL SHEET (ENGLISH) (REV. 03/14/12)

ORIGINAL SCALE IN INCHES FOR REDUCED PLANS 0 1 2 3

UNIT:
PROJECT NUMBER & PHASE:
CONTRACT NO.:

DISREGARD PRINTS BEARING EARLIER REVISION DATES

REVISION DATES: X

SHEET 12 OF 27

FILE => J:\2007_Bear_Vly_BR_Widen\517\2007TS.dgn

DIST	COUNTY	ROUTE	POST MILES TOTAL PROJECT	SHEET No	TOTAL SHEETS
08	SB	CR		68	82

REGISTERED CIVIL ENGINEER DATE

PLANS APPROVAL DATE

REGISTERED PROFESSIONAL ENGINEER
T. OSTERKAMP
No. C46783
Exp. 6/30/17
CIVIL
STATE OF CALIFORNIA

The State of California or its officers or agents shall not be responsible for the accuracy or completeness of scanned copies of this plan sheet.

DOKKEN ENGINEERING
110 BLUE RAVINE ROAD, SUITE 200
FOLSOM, CA 95630

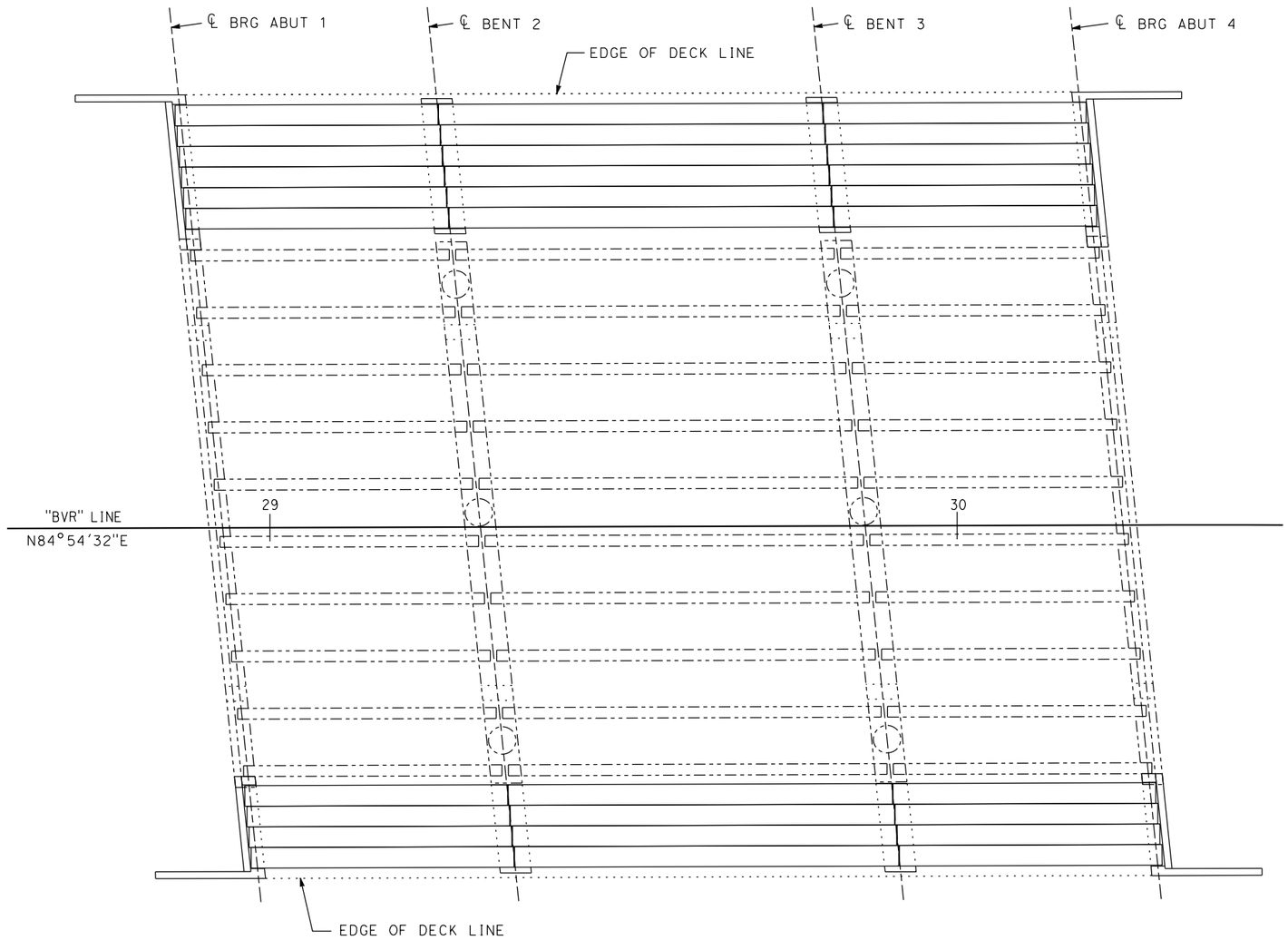

PLAN

1" = 10'

95% PLANS NOT FOR CONSTRUCTION

USERNAME => unfiled DATE PLOTTED => $DATE TIME PLOTTED => 5:03:05 PM

DESIGN OVERSIGHT

SIGN OFF DATE

	BY	CHECKED
DESIGN	T. Osterkamp	M. Iley
DETAILS	R. Liptak	M. Iley
QUANTITIES	R. Liptak	M. Iley

PREPARED FOR THE CITY OF VICTORVILLE

T. Osterkamp
PROJECT ENGINEER

BRIDGE NO. 54C0547
POST MILES

BEAR VALLEY ROAD OVERHEAD
GIRDER LAYOUT

DESIGN DETAIL SHEET (ENGLISH) (REV. 03/14/12)

ORIGINAL SCALE IN INCHES FOR REDUCED PLANS 0 1 2 3

UNIT:
PROJECT NUMBER & PHASE: CONTRACT NO.:

DISREGARD PRINTS BEARING EARLIER REVISION DATES

REVISION DATES: x

SHEET 13 OF 27

FILE => J:\2007_Bear_Vly_BR_Widen\517\2007GL01.dgn

DIST	COUNTY	ROUTE	POST MILES TOTAL PROJECT	SHEET No	TOTAL SHEETS
08	SB	CR		69	82

REGISTERED CIVIL ENGINEER DATE

PLANS APPROVAL DATE

REGISTERED PROFESSIONAL ENGINEER T. OSTERKAMP No. C46783 Exp. 6/30/17 CIVIL STATE OF CALIFORNIA

The State of California or its officers or agents shall not be responsible for the accuracy or completeness of scanned copies of this plan sheet.

DOKKEN ENGINEERING
110 BLUE RAVINE ROAD, SUITE 200
FOLSOM, CA 95630

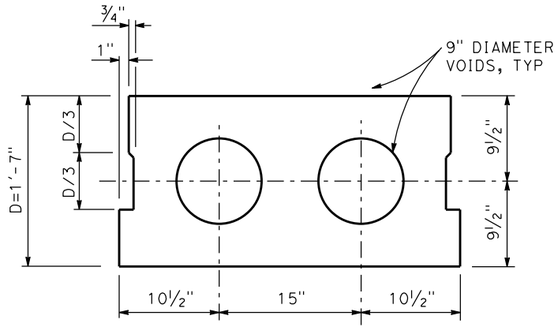

TYPICAL SECTION - INTERIOR GIRDER

NO SCALE

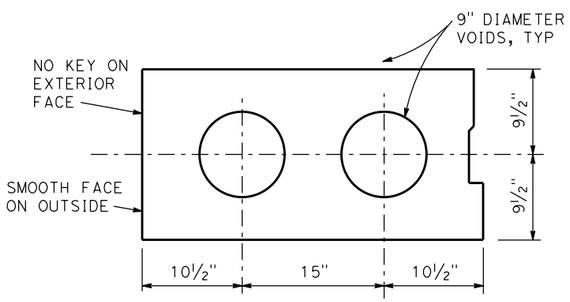

TYPICAL SECTION - EXTERIOR GIRDER

NO SCALE

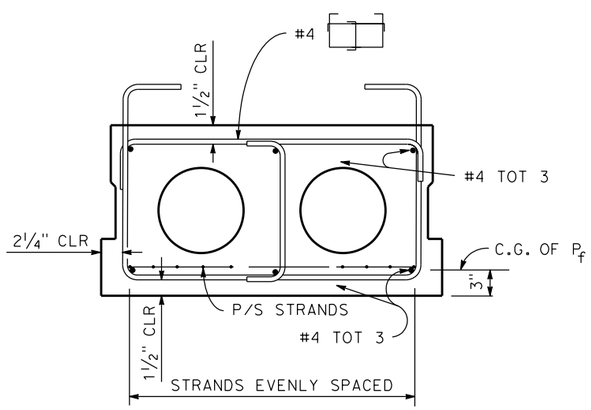

TYPICAL REINFORCEMENT

NO SCALE

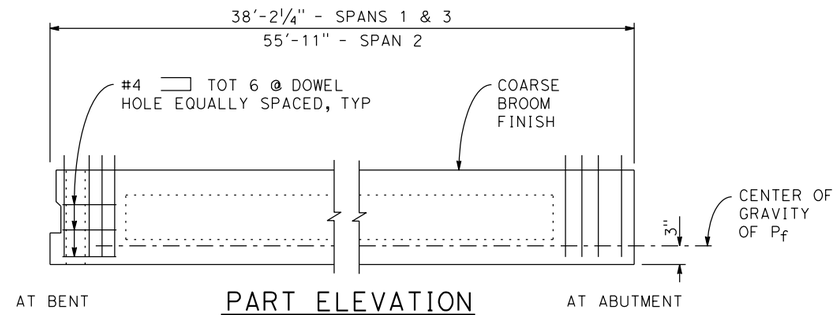

PART ELEVATION

NO SCALE

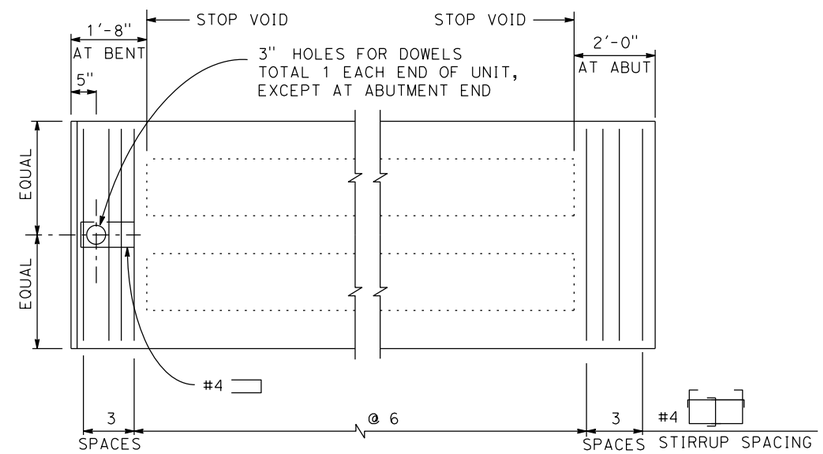

PART PLAN

NO SCALE

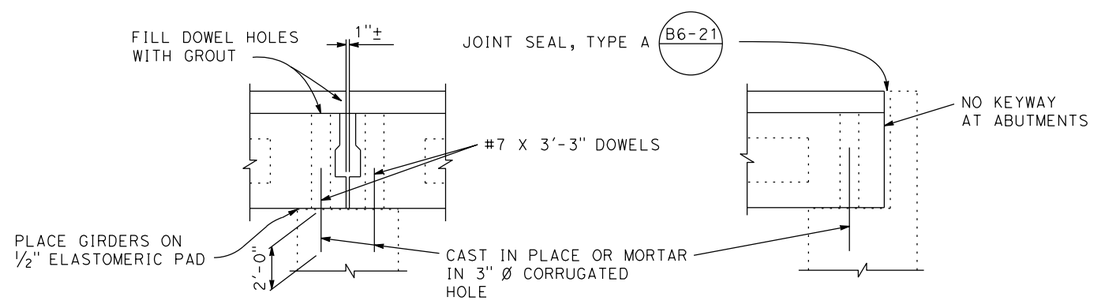

SUPPORT DETAILS

NO SCALE

GENERAL NOTES

1. P_f IS THE FORCE REQUIRED AT CENTER OF SPAN AFTER ALL LOSSES.
2. SLABS DESIGNED FOR PRETENSIONING.
3. KEYWAYS TO BE FILLED WITH GROUT.

GIRDER LOCATION OR DESIGNATION AND LENGTH	JACKING FORCE (P_f) IN Kips	CONCRETE STRENGTH (ksi)	
		f'_{ci}	f'_c
SPANS 1 & 3 38'-0"	410	4.0	6.0
SPAN 2 55'-9 1/2"	450	4.0	6.0

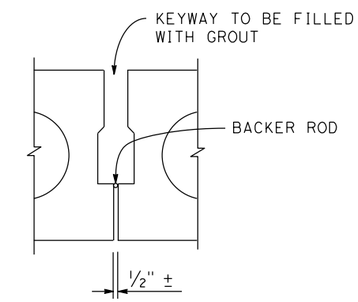

KEYWAY DETAIL

NO SCALE

95% PLANS NOT FOR CONSTRUCTION

USERNAME => untitled DATE PLOTTED => $DATE TIME PLOTTED => 5:03:06 PM

DESIGN OVERSIGHT

SIGN OFF DATE

	BY	CHECKED
DESIGN	T. Osterkamp	M. Iley
DETAILS	R. Liptak	M. Iley
QUANTITIES	R. Liptak	M. Iley

PREPARED FOR THE CITY OF VICTORVILLE

T. Osterkamp
PROJECT ENGINEER

BRIDGE NO. 54C0547
POST MILES

BEAR VALLEY ROAD OVERHEAD
PC/PS CONCRETE SLAB GIRDER

DESIGN DETAIL SHEET (ENGLISH) (REV. 03/14/12)

ORIGINAL SCALE IN INCHES FOR REDUCED PLANS 0 1 2 3

UNIT:
PROJECT NUMBER & PHASE:
CONTRACT NO.:

DISREGARD PRINTS BEARING EARLIER REVISION DATES

REVISION DATES x

SHEET 14 OF 27

FILE => J:\2007_Bear_Vly_BR_Widen\517\2007SLAB.dgn

DIST	COUNTY	ROUTE	POST MILES TOTAL PROJECT	SHEET No	TOTAL SHEETS
08	SB	CR		70	82

REGISTERED CIVIL ENGINEER DATE

PLANS APPROVAL DATE

REGISTERED PROFESSIONAL ENGINEER
T. OSTERKAMP
No. C46783
Exp. 6/30/17
CIVIL
STATE OF CALIFORNIA

The State of California or its officers or agents shall not be responsible for the accuracy or completeness of scanned copies of this plan sheet.

DOKKEN ENGINEERING
110 BLUE RAVINE ROAD, SUITE 200
FOLSOM, CA 95630

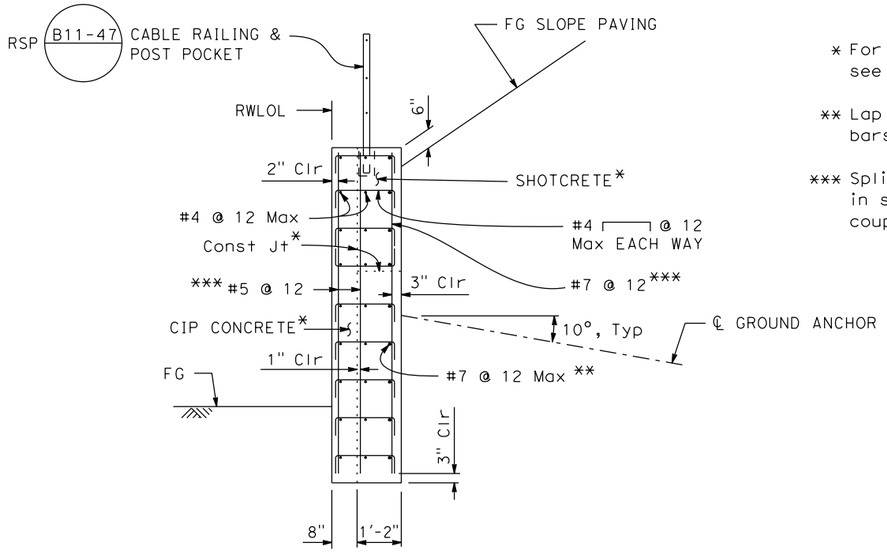

RETAINING WALL TYPICAL SECTION

½" = 1'-0"

* For limits of shotcrete lifts and CIP concrete, see "Retaining Wall Details No. 1" sheet.

** Lap #7 horizontal bars with #6 horizontal bars (3'-6" minimum lap)

*** Splices in vertical reinforcement at Const Jt in shotcrete shall be service spliced with mechanical couplers.

LEGEND

LIMITS OF EXCAVATION

LIMITS OF BACKFILL

—·-·—·— DENOTES EXIST STRUCTURE

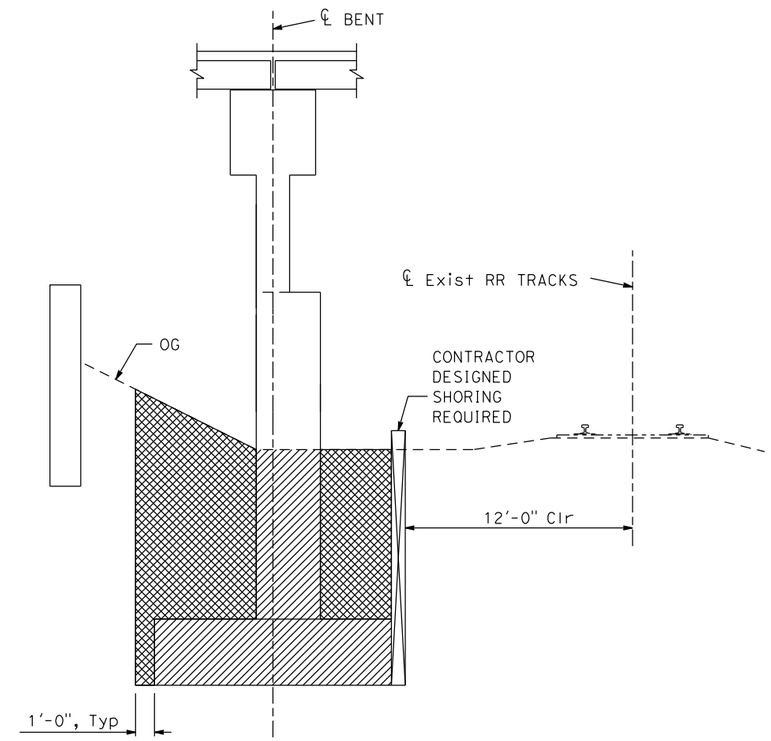

EXCAVATION & BACKFILL LIMITS

NO SCALE

95% PLANS NOT FOR CONSTRUCTION

DESIGN OVERSIGHT	DESIGN	BY T. Osterkamp	CHECKED M. Iley	PREPARED FOR THE CITY OF VICTORVILLE	T. Osterkamp PROJECT ENGINEER
SIGN OFF DATE	DETAILS	BY R. Liptak	CHECKED M. Iley		BRIDGE NO. 54C0547
	QUANTITIES	BY R. Liptak	CHECKED M. Iley		POST MILES

BEAR VALLEY ROAD OVERHEAD

MISCELLANEOUS DETAILS

DESIGN DETAIL SHEET (ENGLISH) (REV. 03/14/12)

ORIGINAL SCALE IN INCHES FOR REDUCED PLANS 0 1 2 3

UNIT:
PROJECT NUMBER & PHASE: CONTRACT NO.:

DISREGARD PRINTS BEARING EARLIER REVISION DATES

REVISION DATES: x

SHEET 15 OF 27

FILE => J:\2007_Bear_Vly_BR_Widen\517\2007MD1.dgn

USERNAME => untitled DATE PLOTTED => $DATE TIME PLOTTED => 5:03:06 PM

DIST	COUNTY	ROUTE	POST MILES TOTAL PROJECT	SHEET No	TOTAL SHEETS
08	SB	CR		71	82

REGISTERED CIVIL ENGINEER DATE

PLANS APPROVAL DATE

REGISTERED PROFESSIONAL ENGINEER T. OSTERKAMP No. C46783 Exp. 6/30/17 CIVIL STATE OF CALIFORNIA

The State of California or its officers or agents shall not be responsible for the accuracy or completeness of scanned copies of this plan sheet.

DOKKEN ENGINEERING
110 BLUE RAVINE ROAD, SUITE 200
FOLSOM, CA 95630

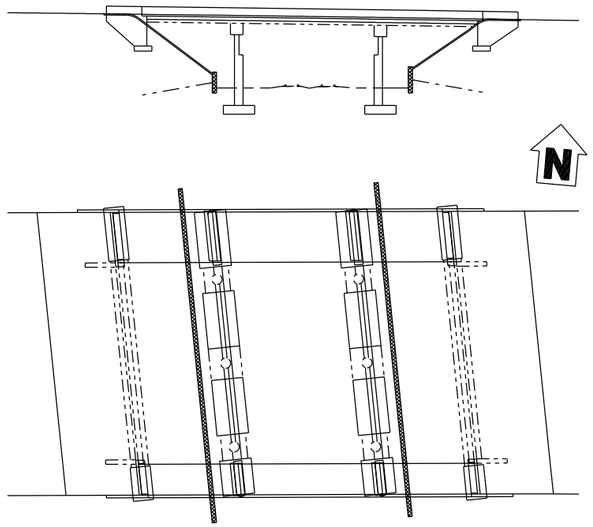

STEP 1
NO SCALE

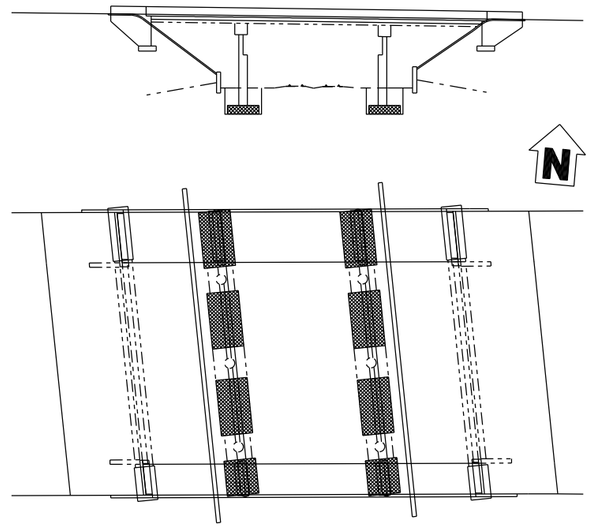

STEP 2
NO SCALE

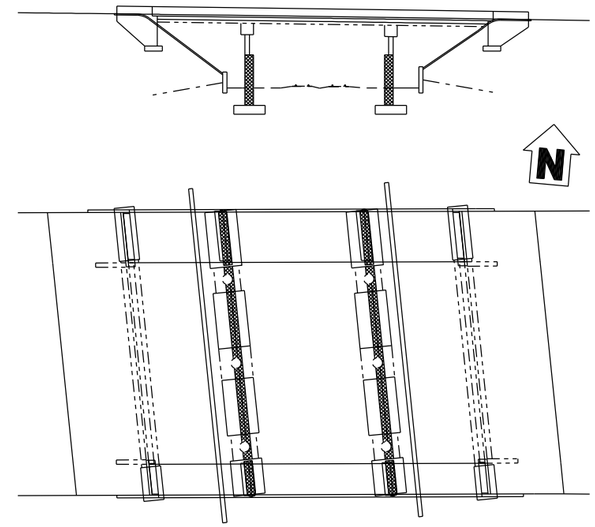

STEP 3
NO SCALE

LEGEND

STEP CONSTRUCTION

STEPS:

1. Remove slope paving (partial) and construct tie back walls.
2. Excavate and shore. Construct footings.
3. Construct crash walls and bents to top of crash walls. Backfill excavations. Remaining bent wall between existing columns can be constructed in steps 3-6.
4. Construct remaining bent and bent cap, south side only. Construct south side abutments (may be constructed in steps 1-4).
5. Construct south side superstructure, barriers, and closure pour.
6. Repeat steps 4 and 5 for north side construction.

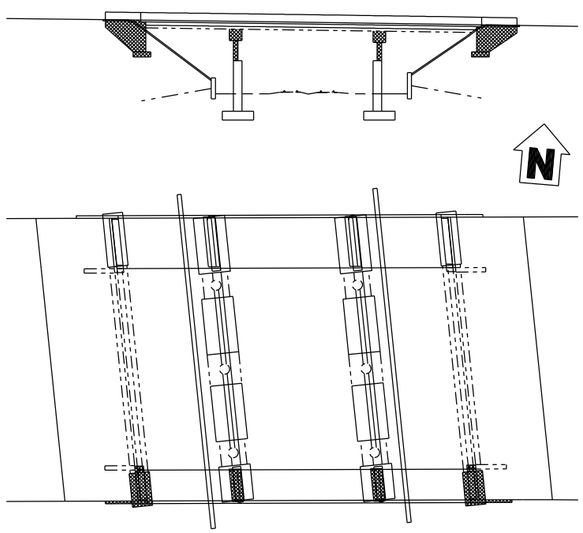

STEP 4
NO SCALE

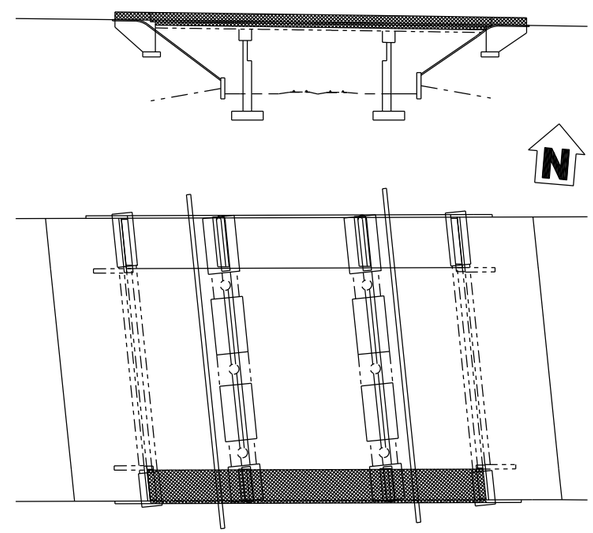

STEP 5
NO SCALE

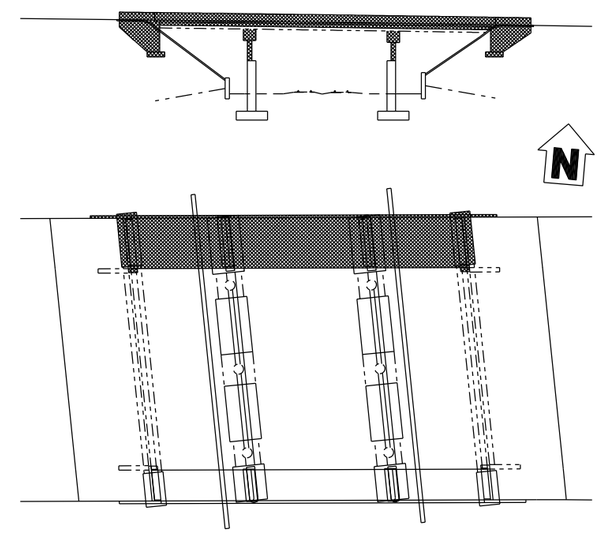

STEP 6
NO SCALE

95% PLANS NOT FOR CONSTRUCTION

USERNAME => untitled DATE PLOTTED => $DATE TIME PLOTTED => 5:03:07 PM

DESIGN OVERSIGHT

SIGN OFF DATE

	BY	CHECKED
DESIGN	T. Osterkamp	M. Iley
DETAILS	R. Liptak	M. Iley
QUANTITIES	R. Liptak	M. Iley

PREPARED FOR THE **CITY OF VICTORVILLE**

T. Osterkamp
PROJECT ENGINEER

BRIDGE NO. 54C0547
POST MILES

BEAR VALLEY ROAD OVERHEAD
CONSTRUCTION SEQUENCE

DESIGN DETAIL SHEET (ENGLISH) (REV. 03/14/12)

ORIGINAL SCALE IN INCHES FOR REDUCED PLANS 0 1 2 3

UNIT:
PROJECT NUMBER & PHASE: CONTRACT NO.:

DISREGARD PRINTS BEARING EARLIER REVISION DATES

REVISION DATES x

SHEET 16 OF 27

FILE => J:\2007_Bear_Vly_BR_Widen\517\2007CONST1.dgn

DIST	COUNTY	ROUTE	POST MILES TOTAL PROJECT	SHEET No.	TOTAL SHEETS
06	Kern	99	24.5	72	82

REGISTERED STRUCTURAL ENGINEER DATE

PLANS APPROVAL DATE

The State of California or its officers or agents shall not be responsible for the accuracy or completeness of electronic copies of this plan sheet.

REGISTERED PROFESSIONAL ENGINEER T. OSTERKAMP No. C46783 Exp. 6/30/17 STRUCTURAL STATE OF CALIFORNIA

DOKKEN ENGINEERING
110 BLUE RAVINE ROAD, SUITE 200
FOLSOM, CA 95630

GENERAL NOTES

DESIGN:

AASHTO LRFD Bridge Design Specifications, 4th Edition with California Amendments.

PRESTRESSING STEEL:

Bars - ASTM Designation: A722 Type II (150 ksi)

Strand Tendons-ASTM Designation: A416 (270 Ksi Low Relaxation steel)

FTL = Factored Test Load per anchor (Kips)

fpu = Minimum tensile strength of prestressing steel

As = Minimum cross sectional area of prestressing steel in ground anchor (square inch)

$As(Min) = \frac{1.0\ FTL}{0.75\ fpu}$ (Strands)

$As(Min) = \frac{1.0\ FTL}{0.80\ fpu}$ (Bars)

Lock-off = 0.60 FTL ⟨1⟩

NOTES:

(A) Level of initial grouting for drilled hole 6" in diameter or smaller

(B) Level of secondary grouting

(C) Level of initial grouting inside corrugated sheathing

(D) Bonded length shall be determined by the contractor

(E) For unbonded length = 15'-0" min

(F) For inclination, see "General Plan" sheet

(G) Face of Wall Excavation

NOTES:

1. Anchorage enclosure shall only be used when anchor head assembly is not enclosed in concrete.
2. Anchorage enclosure shall have provisions to allow injecting grout at low end and venting at high end. Galvanize after fabrication.
3. Silicone sealant to cover full width of flange.
4. Steel tube (Min thickness = 1/4") welded to bearing plate. Galvanize assembly after fabrication
5. Steel tube welded to bearing plate. Inside diameter of steel tube (Min thickness = 1/4") to be 1" greater than outside diameter of smooth sheathing.
6. Galvanize assembly after fabrication.
7. For other wall details, see PROJECT PLANS.

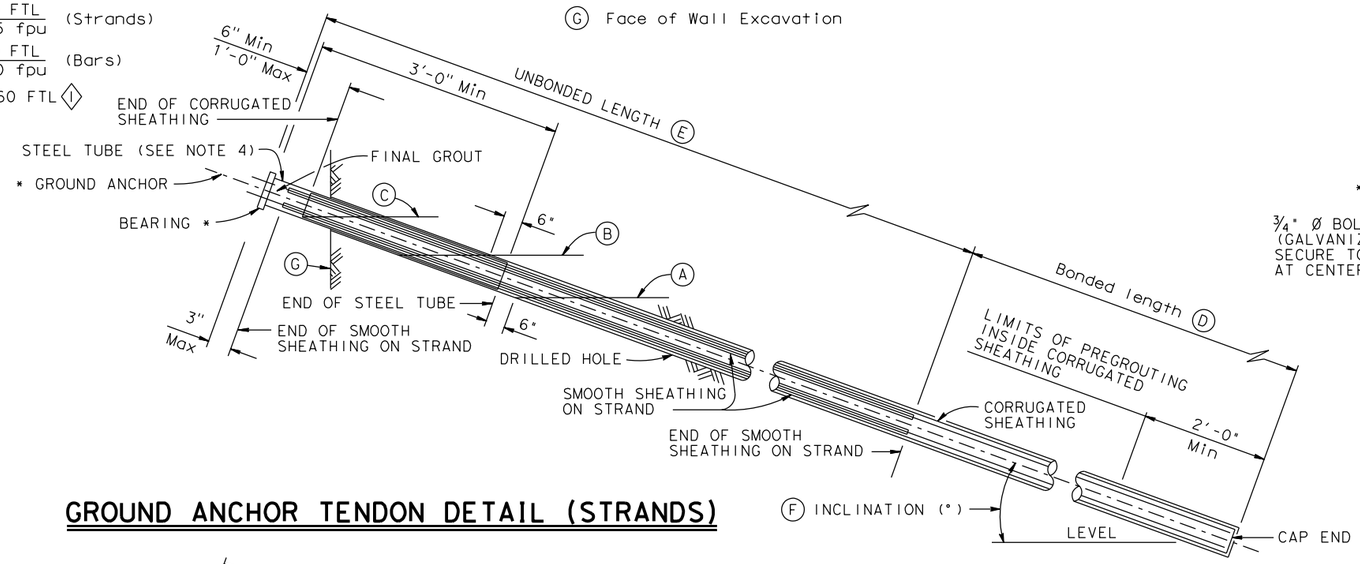

GROUND ANCHOR TENDON DETAIL (STRANDS)

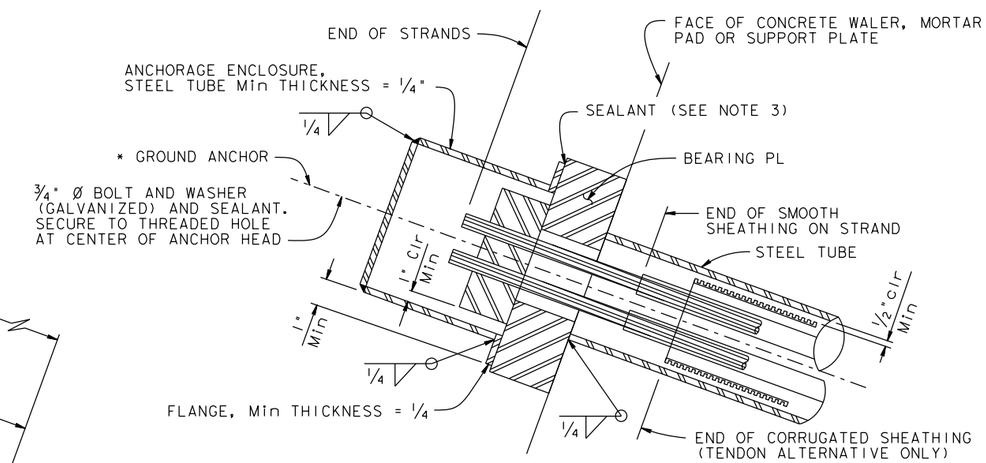

ALTERNATIVE X

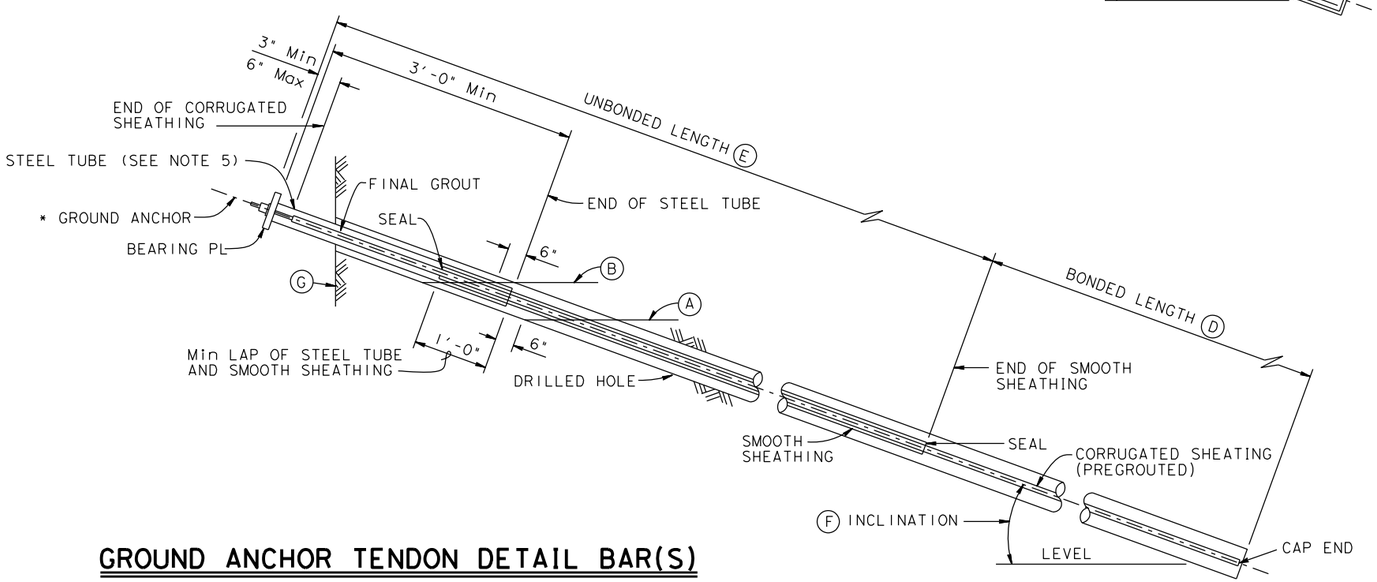

GROUND ANCHOR TENDON DETAIL BAR(S)

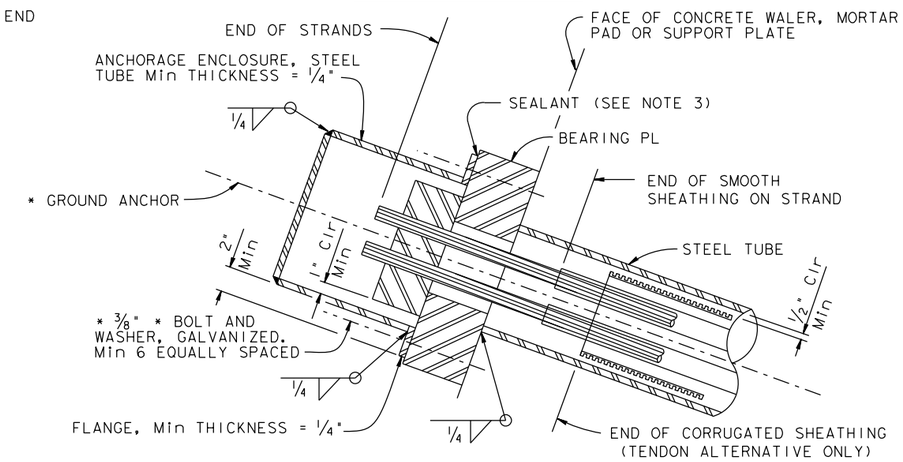

ALTERNATIVE Y

ANCHORAGE ENCLOSURE DETAILS

NO SCALE

95% PLANS NOT FOR CONSTRUCTION

USERNAME => unfitled DATE PLOTTED => $DATE TIME PLOTTED => 5:03:07 PM

REVISED STANDARD DRAWING

FILE NO. xs12-040

APPROVAL DATE July 2014

⟨1⟩ ADDED LOCK-OFF LOAD

STATE OF CALIFORNIA DEPARTMENT OF TRANSPORTATION

DIVISION OF ENGINEERING SERVICES

BRIDGE NO. 50E0025

POST MILE 24.5

BEAR VALLEY ROAD OVERHEAD

SUB HORIZONTAL GROUND ANCHOR DETAILS

DS OSD 2147A (ENGLISH STANDARD DRAWING "XS" BORDER REV. (02-02-11)

ORIGINAL SCALE IN INCHES FOR REDUCED PLANS 0 1 2 3

UNIT: X
PROJECT NUMBER & PHASE: 0000020505 CONTRACT NO.: 06-933770

DISREGARD PRINTS BEARING EARLIER REVISION DATES

REVISION DATES 6-24-14 7-12-16

SHEET 17 OF 27

FILE => J:\2007_Bear_Vly_BR_Widen\517\2007MD2.dgn

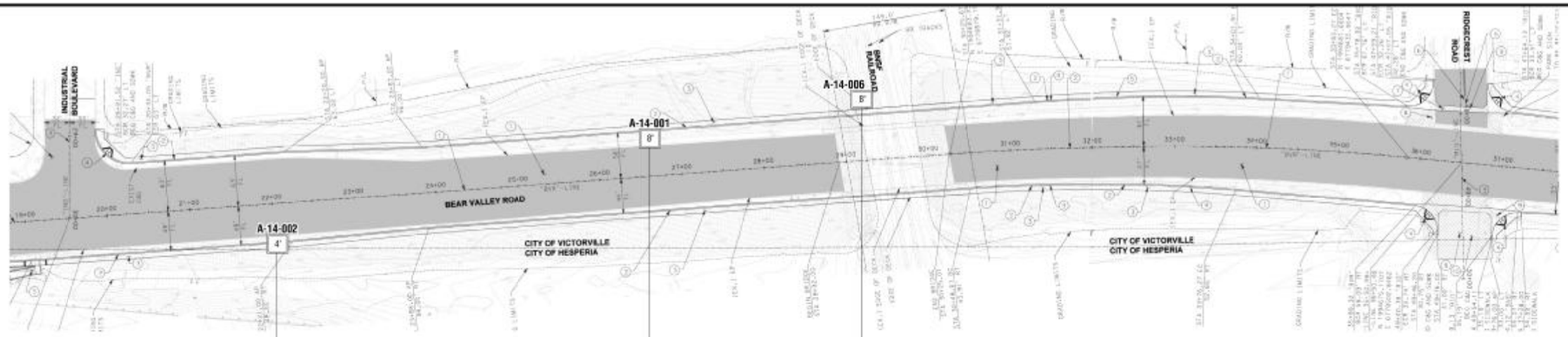

PLAN

SCALE: 1" = 80'

NOTES:

1. The consistency/apparent density descriptions are from Figures 2-9 and 2-10 of the Caltrans "Soil and Rock Logging, Classification, and Presentation Manual". These descriptions are based upon the Standard Penetration Test (ASTM D 1586) corrected for Hammer Energy Ratio and the Modified California sampling method (ASTM D 3550). The descriptions based on the Mod Cal blow counts have been correlated to SPT blow counts based on a correction factor of 0.55 (Rogers, 2006).

2. Relatively undisturbed soil samples were obtained by driving a 3-inch outside diameter, with a 2.5-inch inside diameter (California Modified) split-spoon sampler for Modified California Sampling Methods and a 2-inch outside diameter split-spoon sampler for Standard Penetration Test Sampling Methods.

3. The boring logs and related information represent the opinion of the professional engineer as to the character of the materials at the locations shown. Soil and groundwater conditions between adjacent boreholes or other locations may differ from those shown. Ground water conditions may change with passage of time.

4. Test boring elevations are approximate based on topography as based on field surveys performed for this project.

5. Test boring locations were determined in the field, based on scaling and pacing from mapped site features. The locations shown on the exploration sheet should be considered accurate only to the degree implied by the measuring methods used.

6. A 140-pound automatic hammer falling 30 inches was used to drive samplers.

7. Visual classification of earth materials was based on field inspection and was confirmed or revised with laboratory test results.

8. This LOTB sheet was prepared in accordance with the Caltrans Soil & Rock Logging, Classification, and Presentation Manual (2010).

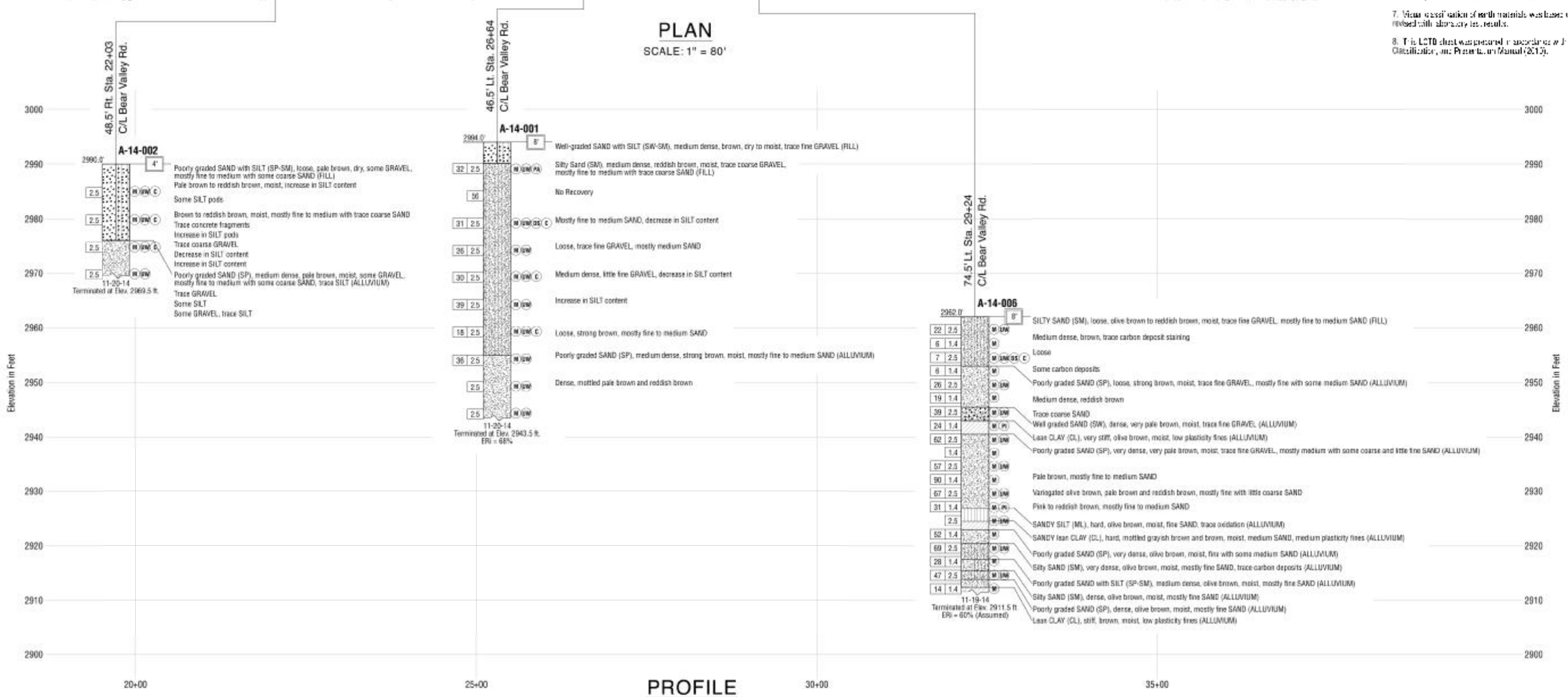

PROFILE

HORIZONTAL SCALE: 1" = 80'
VERTICAL SCALE: 1" = 10'

NO.	REVISION	BY	DATE

DESIGNED: JELISA THOMAS
DRAWN: DIRK HANSEN
CHECKED: JELISA THOMAS

RECORD DRAWING DATE:
SCALE: HORIZ: 80' VERT: 10'
PROJECT NO. XXXXX
CAD FILE: ...\511\2007_001.dgn

CITY OF VICTORVILLE
ENGINEERING DIVISION
14343 CIVIC DRIVE,
VICTORVILLE, CA 92392
(760) 955-5158

DOKKEN ENGINEERING
110 BLUE RAVINE ROAD SUITE 200, FOLSOM CA. 916-858-0642

JUANN RAMOS, PROJECT ENGINEER
DATE

REGISTERED PROFESSIONAL ENGINEER
JELISA THOMAS
CIVIL
STATE OF CALIFORNIA

BEAR VALLEY ROAD OH AT BNSF RAILROAD

LOG OF TEST BORING NO. 1

DWG. NO. 6

DIST	COUNTY	ROUTE	POST MILES TOTAL PROJECT	SHEET No	TOTAL SHEETS
08	SB	CR		73	82

REGISTERED CIVIL ENGINEER DATE

PLANS APPROVAL DATE

REGISTERED PROFESSIONAL ENGINEER T. OSTERKAMP No. C46783 Exp. 6/30/17 CIVIL STATE OF CALIFORNIA

The State of California or its officers or agents shall not be responsible for the accuracy or completeness of scanned copies of this plan sheet.

DOKKEN ENGINEERING
110 BLUE RAVINE ROAD, SUITE 200
FOLSOM, CA 95630

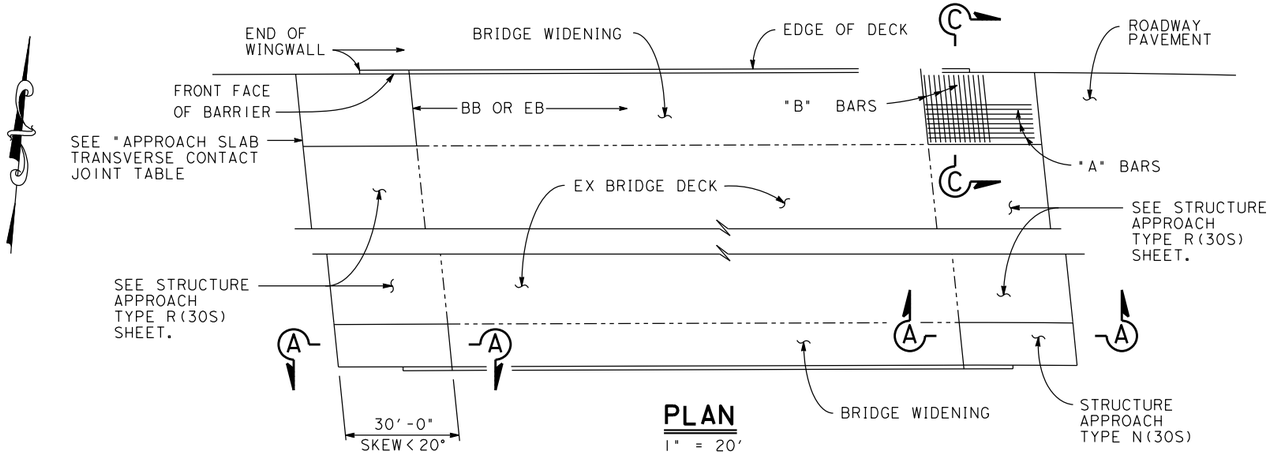

PLAN

1" = 20'

APPROACH SLAB TRANSVERSE CONTACT JOINT		
APPROACH SKEW	WITH AC ROADWAY PAVEMENT	WITH PCC ROADWAY PAVEMENT
< 20°	PARALLEL TO FACE OF PN	PARALLEL TO FACE OF PN

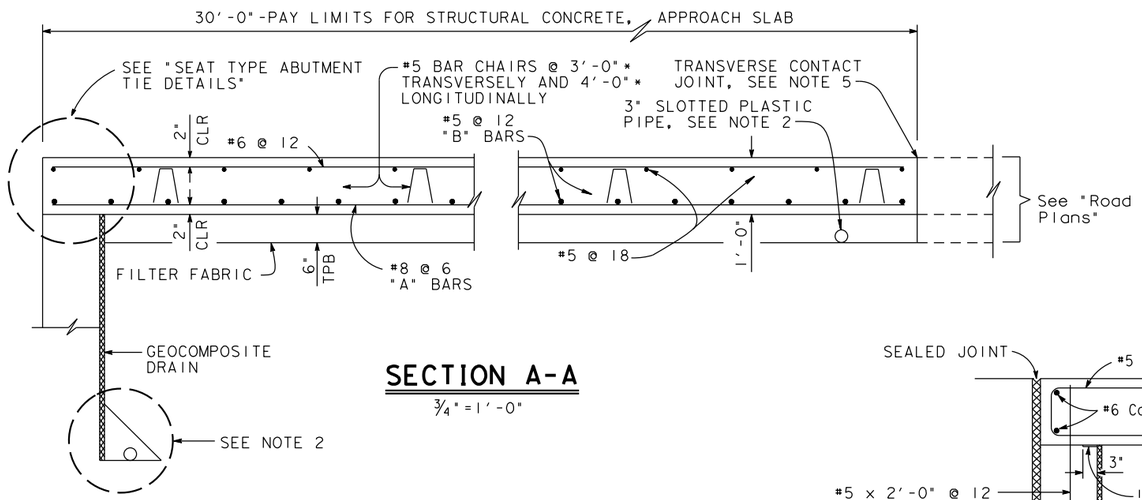

SECTION A-A

3/4" = 1'-0"

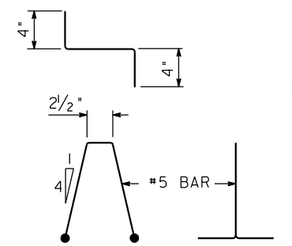

BAR CHAIR DETAIL

1 1/2" = 1'-0"

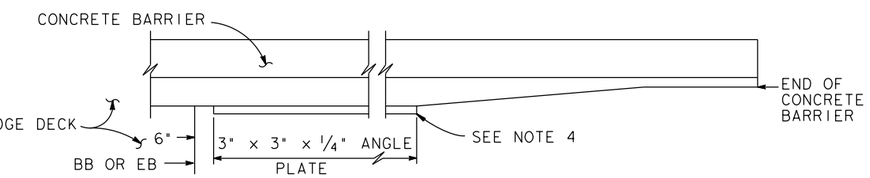

EDGE ANGLE DETAIL

1/2" = 1'-0"

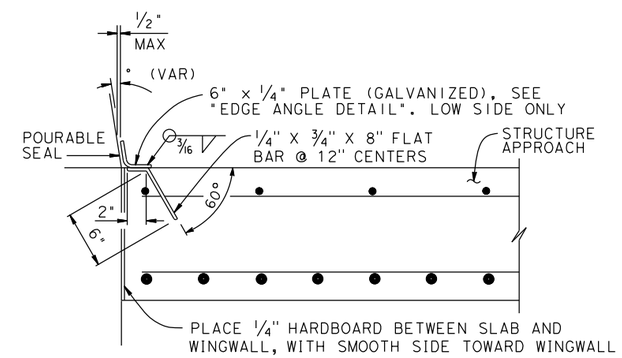

DETAIL B

1 1/2" = 1'-0"

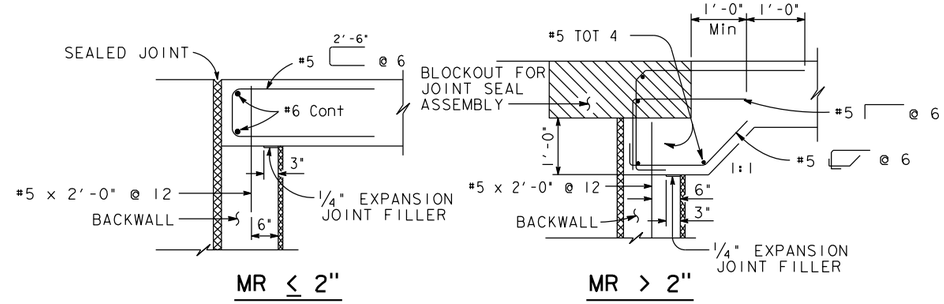

MR ≤ 2" MR > 2"

SEAT TYPE ABUTMENT TIE DETAILS (SEE NOTE 1)

3/4" = 1'-0"

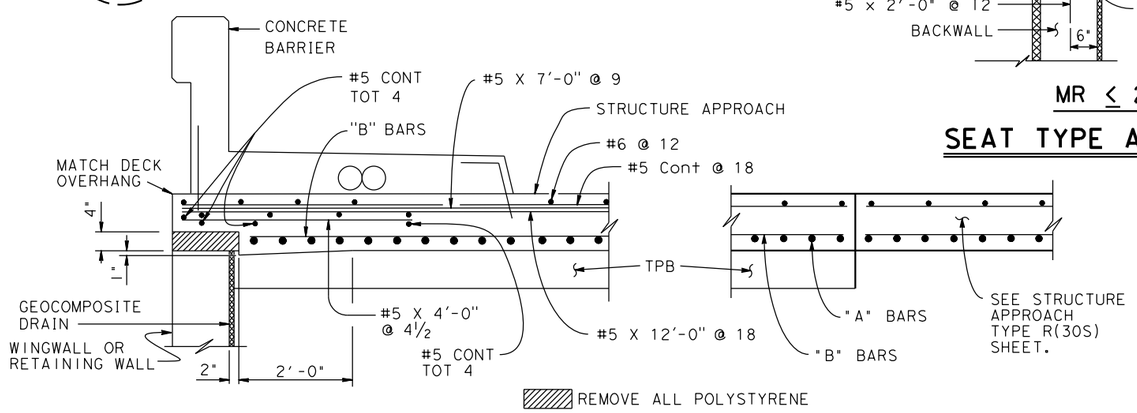

REMOVE ALL POLYSTYRENE

SECTION C-C

3/4" = 1'-0"

LEGEND:

—·—·—·— DENOTES EX STRUCTURE

NOTES:

1. FOR DETAILS NOT SHOWN, SEE STRUCTURE PLANS. FOR MR ≤ 2", ADJUST BAR REINFORCEMENT TO CLEAR A SAWCUT FOR SEALED JOINT, WHEN REQUIRED
2. FOR DRAINAGE DETAILS, SEE "STRUCTURE APPROACH DRAINAGE DETAILS" SHEET
3. LONGITUDINAL CONSTRUCTION JOINTS, WHEN PERMITTED BY THE ENGINEER, SHALL BE LOCATED ON LANE LINES
4. END ANGLE OR PLATE AT BEGINNING OF BARRIER TRANSITION, END OF WINGWALL OR END OF STRUCTURE APPROACH AS APPLICABLE
5. FOR TRANSVERSE CONTACT JOINT WITH NEW PCC PAVING, REFER TO STANDARD PLAN P10
6. AT THE CONTRACTOR'S OPTION, APPROACH SLAB TRANSVERSE REINFORCEMENT MAY BE PLACED PARALLEL TO PAVING NOTCH. SPACING OF TRANSVERSE reinforcement is measured along ℄ roadway

95% PLANS NOT FOR CONSTRUCTION

USERNAME => untitled DATE PLOTTED => $DATE TIME PLOTTED => 5:03:08 PM

DESIGN OVERSIGHT

SIGN OFF DATE

	BY	CHECKED
DESIGN	T. Osterkamp	M. Iley
DETAILS	R. Liptak	M. Iley
QUANTITIES	R. Liptak	M. Iley

PREPARED FOR THE CITY OF VICTORVILLE

T. Osterkamp
PROJECT ENGINEER

BRIDGE NO. 54C0547
POST MILES

BEAR VALLEY ROAD OVERHEAD
STRUCTURE APPROACH TYPE N(30S)

DESIGN DETAIL SHEET (ENGLISH) (REV. 03/14/12)

ORIGINAL SCALE IN INCHES FOR REDUCED PLANS 0 1 2 3

UNIT:
PROJECT NUMBER & PHASE: CONTRACT NO.:

DISREGARD PRINTS BEARING EARLIER REVISION DATES

REVISION DATES x

SHEET 18 OF 27

FILE => J:\2007_Bear_Vly_BR_Widen\517\2007SAN30S.dgn

DIST	COUNTY	ROUTE	POST MILES TOTAL PROJECT	SHEET No	TOTAL SHEETS
08	SB	CR		74	82

REGISTERED CIVIL ENGINEER DATE

PLANS APPROVAL DATE

REGISTERED PROFESSIONAL ENGINEER T. OSTERKAMP No. C46783 Exp. 6/30/17 CIVIL STATE OF CALIFORNIA

The State of California or its officers or agents shall not be responsible for the accuracy or completeness of scanned copies of this plan sheet.

DOKKEN ENGINEERING
110 BLUE RAVINE ROAD, SUITE 200
FOLSOM, CA 95630

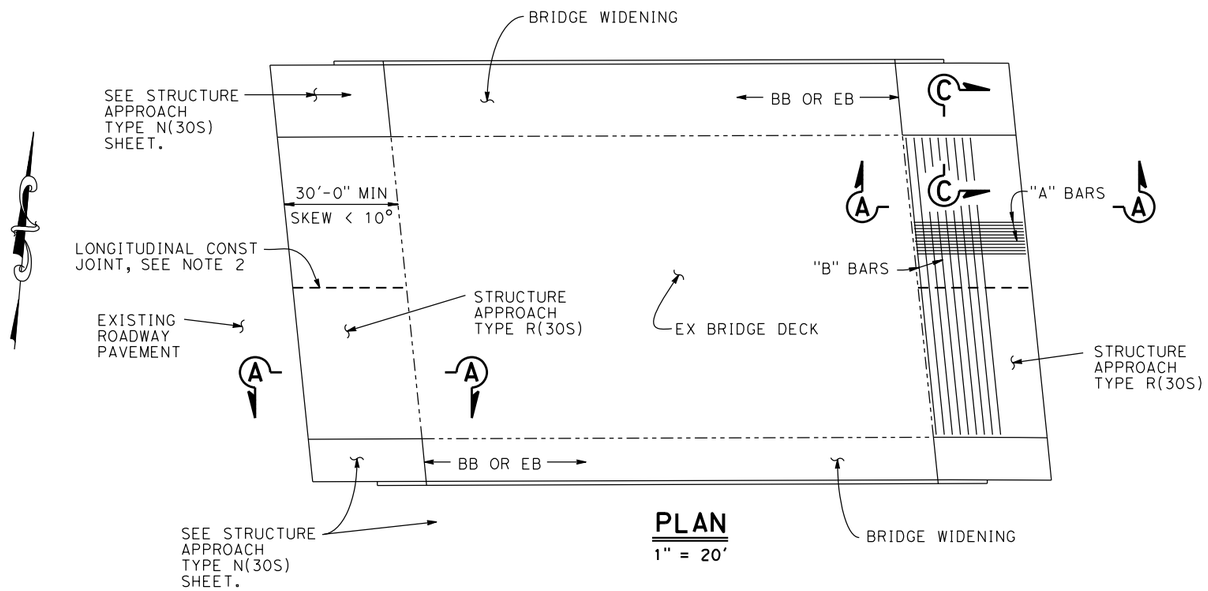

PLAN
1" = 20'

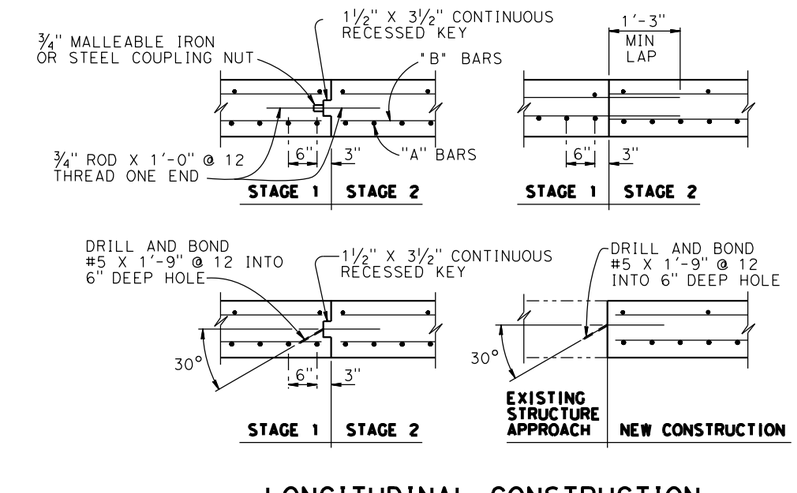

LONGITUDINAL CONSTRUCTION JOINT ALTERNATIVES
3/4" = 1'-0"

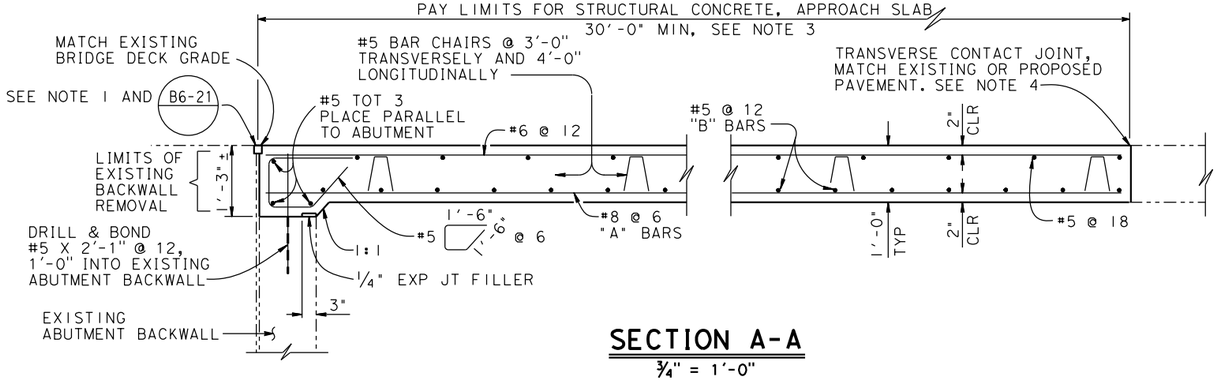

SECTION A-A
3/4" = 1'-0"

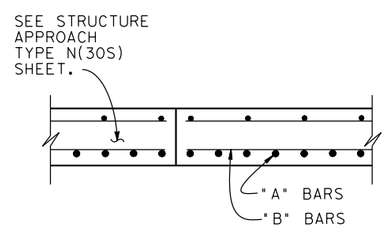

SECTION C-C
3/4" = 1'-0"

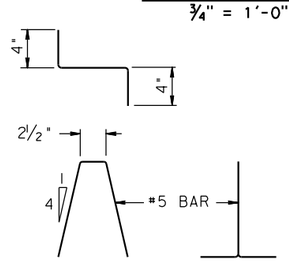

BAR CHAIR DETAIL
1 1/2" = 1'-0"

LEGEND:

—·—·— DENOTES EX STRUCTURE

APPROACH SLAB TRANSVERSE CONTACT JOINT		
APPROACH SKEW	WITH AC ROADWAY PAVEMENT	WITH PCC ROADWAY PAVEMENT
< 10°	PARALLEL TO FACE OF PN	PARALLEL TO FACE OF PN

NOTES:

1. SEALED JOINT, FOR MR SEE STRUCTURE PLANS. ADJUST BAR REINFORCEMENT TO CLEAR A SAWCUT FOR SEALED JOINT, WHEN REQUIRED
2. LONGITUDINAL CONSTRUCTION JOINTS, WHEN PERMITTED BY ENGINEER, SHALL BE LOCATED ON LANE LINES
3. TRANSVERSE CONTACT JOINT SHALL BE A MINIMUM OF 5'-0" FROM AN EXISTING OR CONSTRUCTED WEAKENED PLANE JOINT
4. FOR TRANSVERSE CONTACT JOINT WITH NEW PCC PAVING, REFER TO STANDARD PLAN P10
5. COUPLERS ARE REQUIRED FOR STAGE CONSTRUCTION
6. END ANGLE OR PLATE AT BEGINNING OF BARRIER TRANSITION, END OF WINGWALL OR END OF STRUCTURE APPROACH AS APPLICABLE

NOTE:
THE CONTRACTOR SHALL VERIFY ALL CONTROLLING FIELD DIMENSIONS BEFORE ORDERING OR FABRICATING ANY MATERIAL.

95% PLANS NOT FOR CONSTRUCTION

USERNAME => untitled DATE PLOTTED => $DATE TIME PLOTTED => 5:03:08 PM

DESIGN OVERSIGHT

SIGN OFF DATE

	BY	CHECKED
DESIGN	T. Osterkamp	M. Iley
DETAILS	R. Liptak	M. Iley
QUANTITIES	R. Liptak	M. Iley

PREPARED FOR THE CITY OF VICTORVILLE

T. Osterkamp
PROJECT ENGINEER

BRIDGE NO. 54C0547
POST MILES

BEAR VALLEY ROAD OVERHEAD
STRUCTURE APPROACH TYPE R(30S)

DESIGN DETAIL SHEET (ENGLISH) (REV. 03/14/12)

ORIGINAL SCALE IN INCHES FOR REDUCED PLANS 0 1 2 3

UNIT: X
PROJECT NUMBER & PHASE: X
CONTRACT NO.: X

DISREGARD PRINTS BEARING EARLIER REVISION DATES

REVISION DATES x

SHEET 19 OF 27

FILE => J:\2007_Bear_Vly_BR_Widen\517\2007SAR30S.dgn

DIST	COUNTY	ROUTE	POST MILES TOTAL PROJECT	SHEET No.	TOTAL SHEETS
08	SB	CR		75	82

REGISTERED CIVIL ENGINEER DATE

PLANS APPROVAL DATE

The State of California or its officers or agents shall not be responsible for the accuracy or completeness of electronic copies of this plan sheet.

REGISTERED PROFESSIONAL ENGINEER T. OSTERKAMP No. C46783 Exp. 6/30/17 CIVIL STATE OF CALIFORNIA

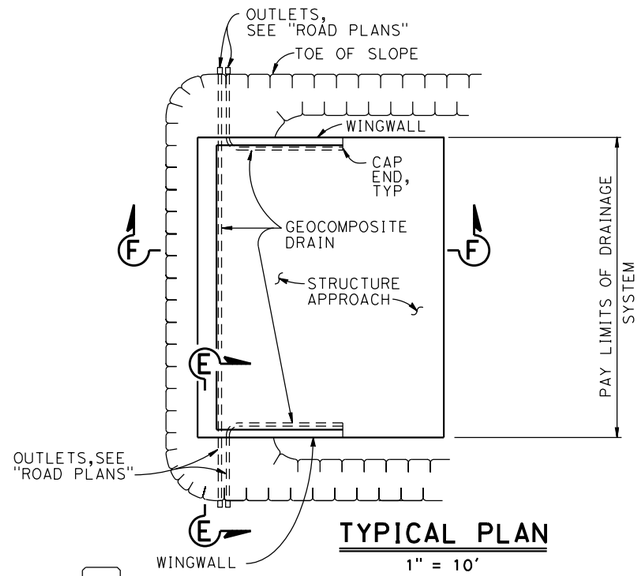

TYPICAL PLAN

1" = 10'

* FOR PIPE LAYOUT AT STAGGERED END, SEE "DETAIL B"

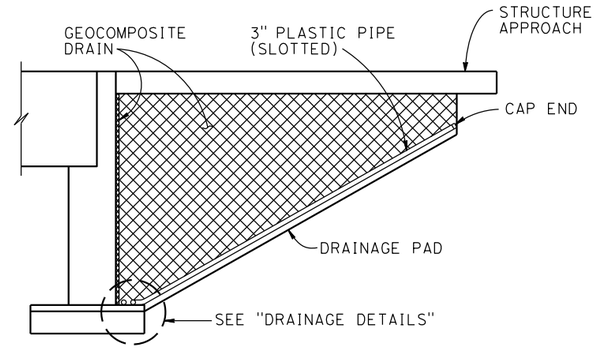

CANTILEVER WINGWALL

SECTION F-F

1/4" = 1'-0"

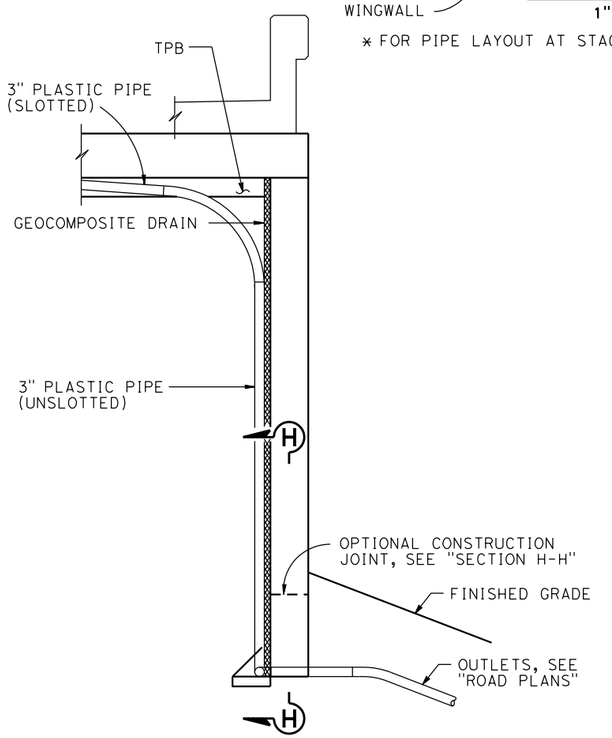

SECTION E-E

1/2" = 1'-0"

NOTE: BENDS AND JUNCTIONS IN 3" PLASTIC PIPE ARE 30" RADIUS MIN

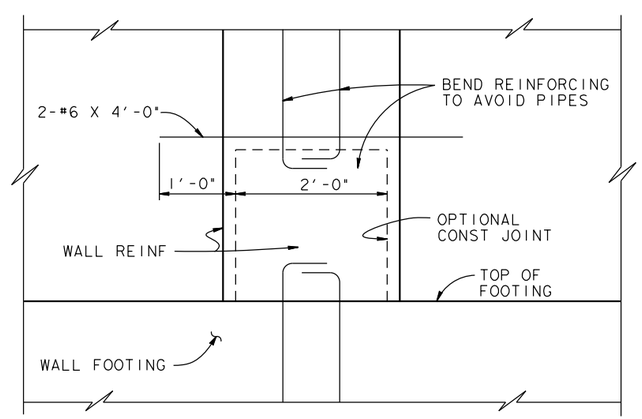

SECTION H-H

1" = 1'-0"

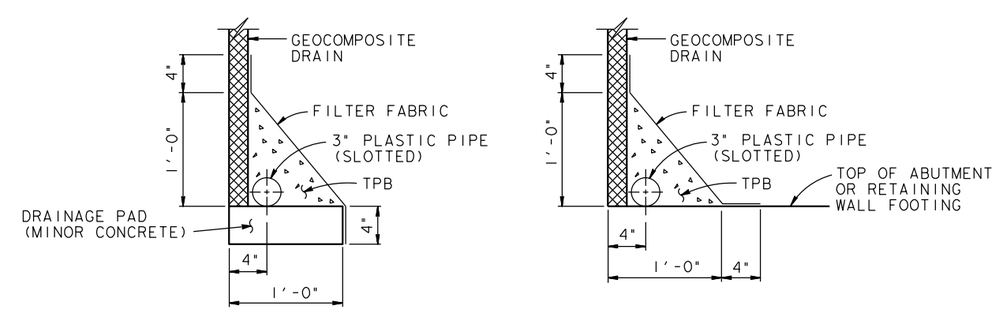

WITHOUT FOOTING

WITH FOOTING

DRAINAGE DETAILS

1 1/2" = 1'-0"

95% PLANS NOT FOR CONSTRUCTION

USERNAME => untitled DATE PLOTTED => $DATE TIME PLOTTED => 5:03:09 PM

STANDARD DRAWING

FILE NO. xs3-110

APPROVAL DATE July 2011

DS OSD 2147A (ENGLISH STANDARD DRAWING "XS" BORDER REV. (02-02-11))

ORIGINAL SCALE IN INCHES FOR REDUCED PLANS 0 1 2 3

STATE OF CALIFORNIA DEPARTMENT OF TRANSPORTATION

DIVISION OF ENGINEERING SERVICES

BRIDGE NO. 54C0547

POST MILE

BEAR VALLEY ROAD OVERHEAD

STRUCTURE APPROACH DRAINAGE DETAILS

UNIT: X

PROJECT NUMBER & PHASE: X

CONTRACT NO.: X

DISREGARD PRINTS BEARING EARLIER REVISION DATES

REVISION DATES

SHEET 20 OF 27

FILE => J:\2007_Bear_Vly_BR_Widen\517\2007SAD.dgn

DIST	COUNTY	ROUTE	POST MILES TOTAL PROJECT	SHEET No	TOTAL SHEETS
08	SB	CR		76	82

REGISTERED CIVIL ENGINEER DATE

PLANS APPROVAL DATE

REGISTERED PROFESSIONAL ENGINEER T. OSTERKAMP No. C46783 Exp. 6/30/17 CIVIL STATE OF CALIFORNIA

The State of California or its officers or agents shall not be responsible for the accuracy or completeness of scanned copies of this plan sheet.

DOKKEN ENGINEERING
110 BLUE RAVINE ROAD, SUITE 200
FOLSOM, CA 95630

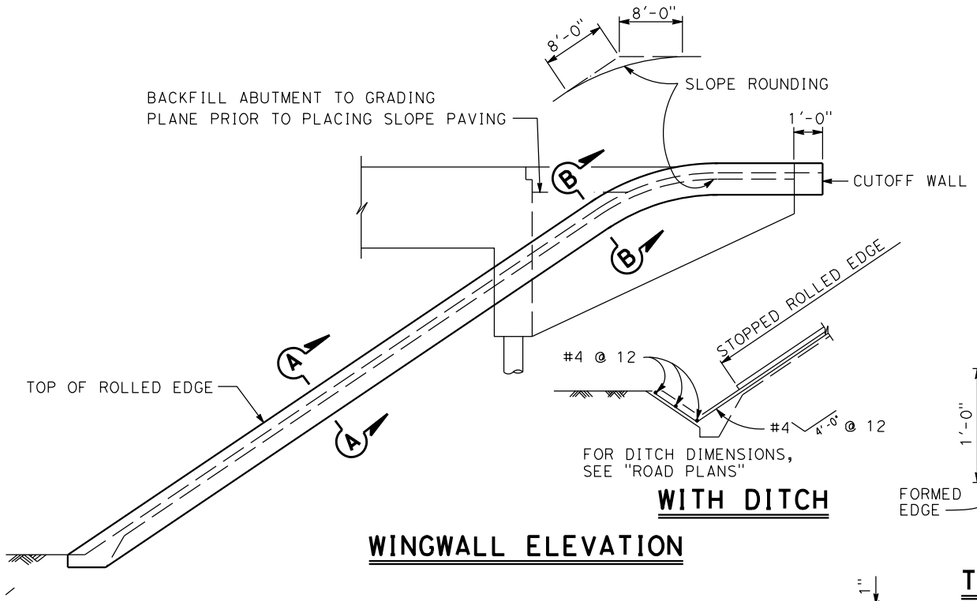

WITH DITCH

WINGWALL ELEVATION

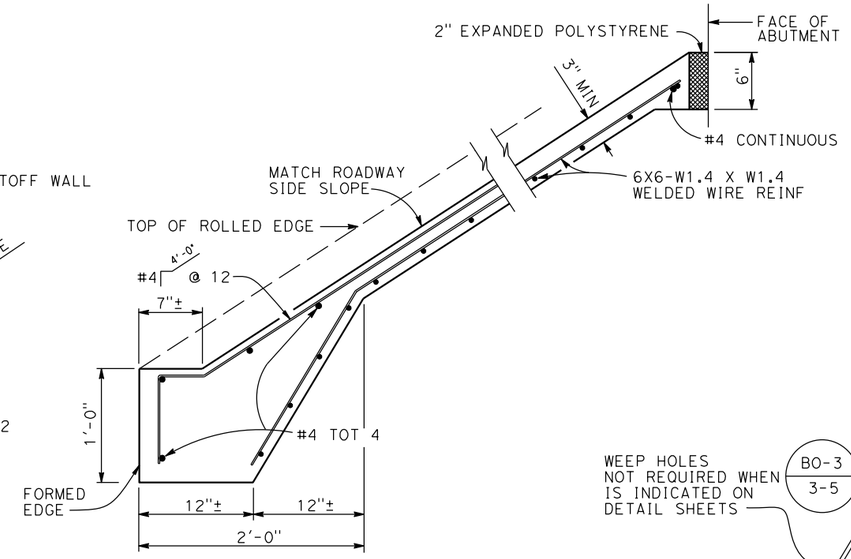

TYPICAL SECTION - CONCRETE PAVING

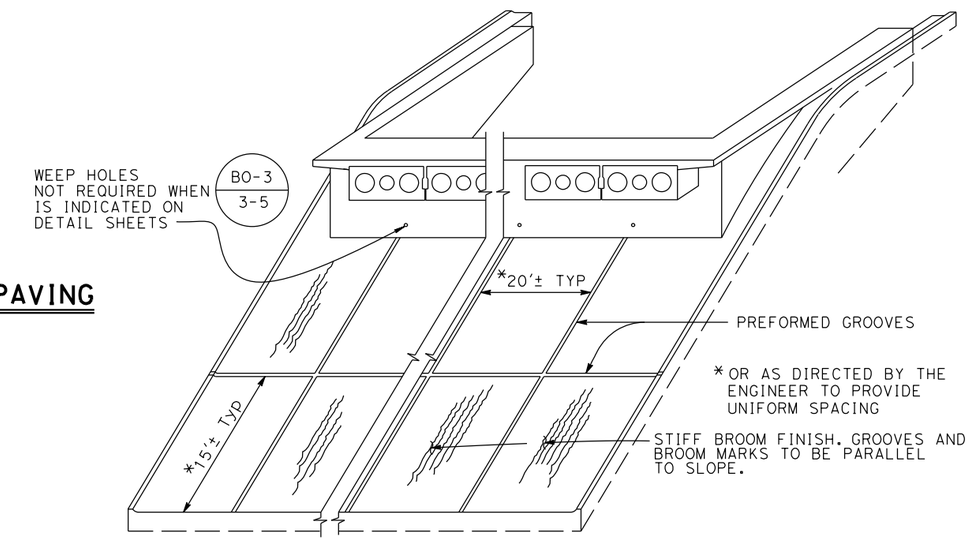

PICTORIAL VIEW OF TYPICAL INSTALLATION

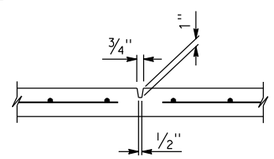

PREFORMED GROOVE

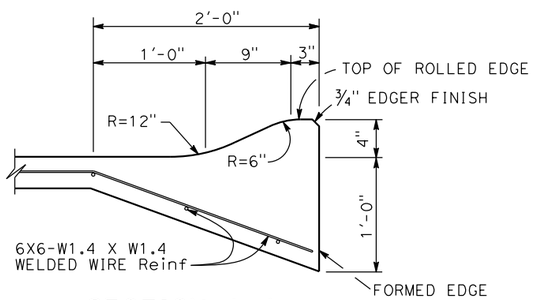

SECTION A-A

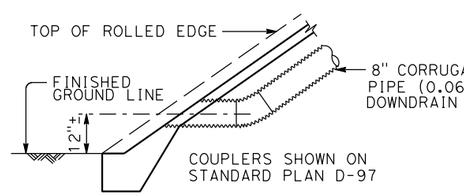

TYPICAL - NO CURB

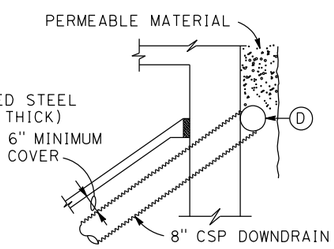

TYPICAL - DRAIN CONNECTION

* THIS DIMENSION BECOMES ZERO WHEN EDGE OF DECK IS AT OUTSIDE FACE OF WW

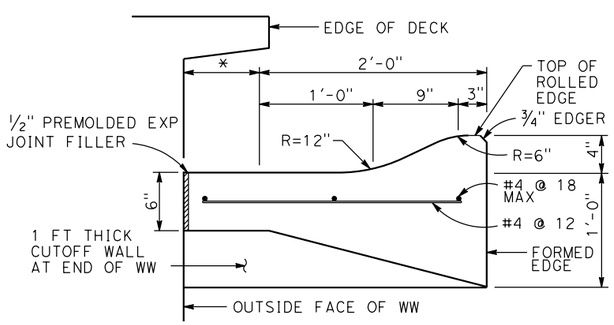

SECTION B-B

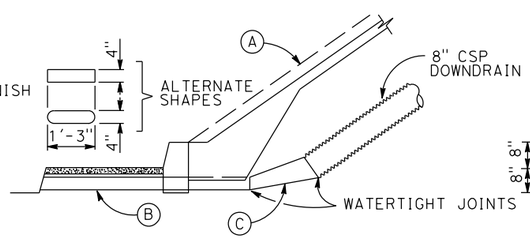

TYPICAL - WITH SIDEWALK

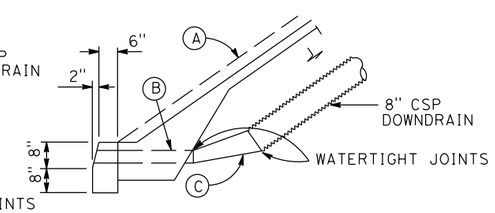

TYPICAL - WITH CURB

DRAINAGE DETAILS

NOTE:
Drainage details are only applicable when is indicated on detail sheets. BO-3 / 3-5

NO SCALE

LIMITS OF SLOPE PAVING & DRAINAGE LAYOUT:

(A) TOP OF ROLLED EDGE

(B) CONDUIT:
0.064" GALV CORRUGATED STEEL OR 0.109" SMOOTH GALV STEEL

(C) TAPER: 0.064" GALV CORRUGATED STEEL OR 0.109" SMOOTH GALV STEEL

(D) 8" PERFORATED STEEL PIPE (0.064" THICK) UNDERDRAIN BEHIND ABUTMENT. CONNECT TO DOWNDRAIN AS SHOWN ON LIMITS OF SLOPE PAVING & DRAINAGE LAYOUT.

95% PLANS NOT FOR CONSTRUCTION

USERNAME => untitled DATE PLOTTED => $DATE TIME PLOTTED => 5:03:09 PM

DESIGN	BY T. Osterkamp	CHECKED M. Iley	
DETAILS	BY R. Liptak	CHECKED M. Iley	
QUANTITIES	BY R. Liptak	CHECKED M. Iley	

DESIGN OVERSIGHT

SIGN OFF DATE

PREPARED FOR THE CITY OF VICTORVILLE

T. Osterkamp
PROJECT ENGINEER

BRIDGE NO. 54C0547
POST MILES

BEAR VALLEY ROAD OVERHEAD
SLOPE PAVING - FULL SLOPE

DESIGN DETAIL SHEET (ENGLISH) (REV. 03/14/12)

ORIGINAL SCALE IN INCHES FOR REDUCED PLANS 0 1 2 3

UNIT: X
PROJECT NUMBER & PHASE: X
CONTRACT NO.: X

DISREGARD PRINTS BEARING EARLIER REVISION DATES

REVISION DATES: X

SHEET 21 OF 27

FILE => J:\2007_Bear_Vly_BR_Widen\517\2007SLP.dgn

DIST	COUNTY	ROUTE	POST MILES TOTAL PROJECT	SHEET No	TOTAL SHEETS
08	SB	CR		77	82

REGISTERED CIVIL ENGINEER DATE

PLANS APPROVAL DATE

The State of California or its officers or agents shall not be responsible for the accuracy or completeness of scanned copies of this plan sheet.

REGISTERED PROFESSIONAL ENGINEER T. OSTERKAMP No. C46783 Exp. 6/30/17 CIVIL STATE OF CALIFORNIA

DOKKEN ENGINEERING
110 BLUE RAVINE ROAD, SUITE 200
FOLSOM, CA 95630

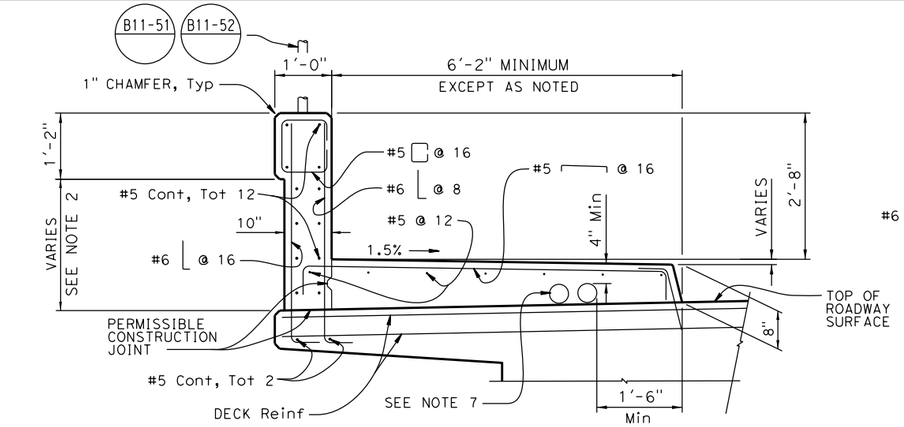

SECTION A-A

¾" = 1'-0"

TYPICAL SECTION ON DECK

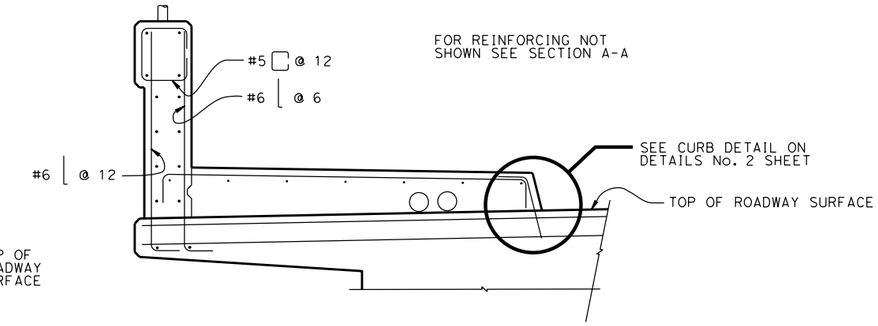

SECTION B-B

¾" = 1'-0"

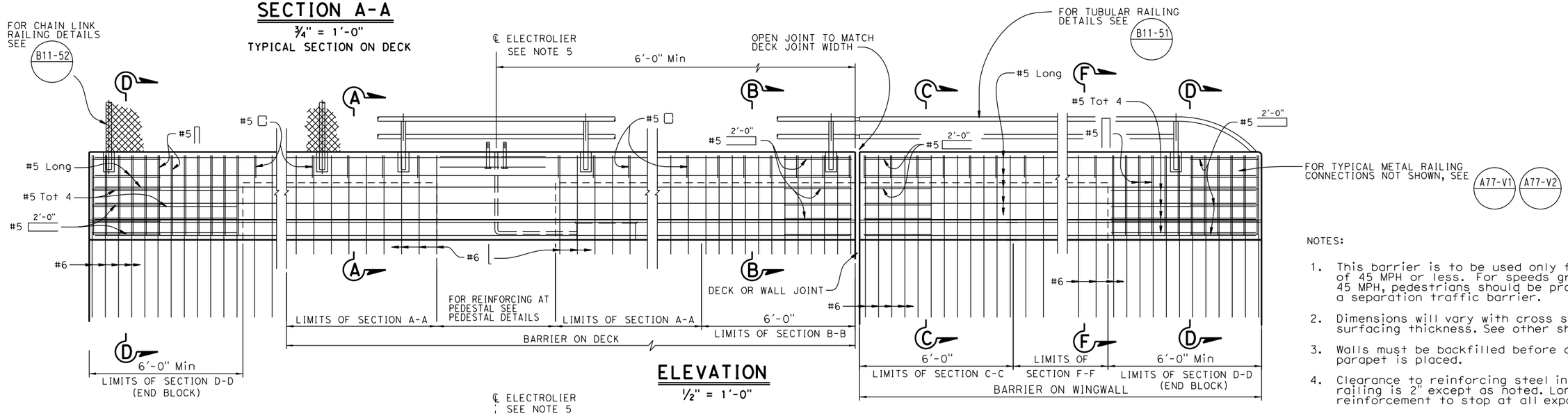

ELEVATION

½" = 1'-0"

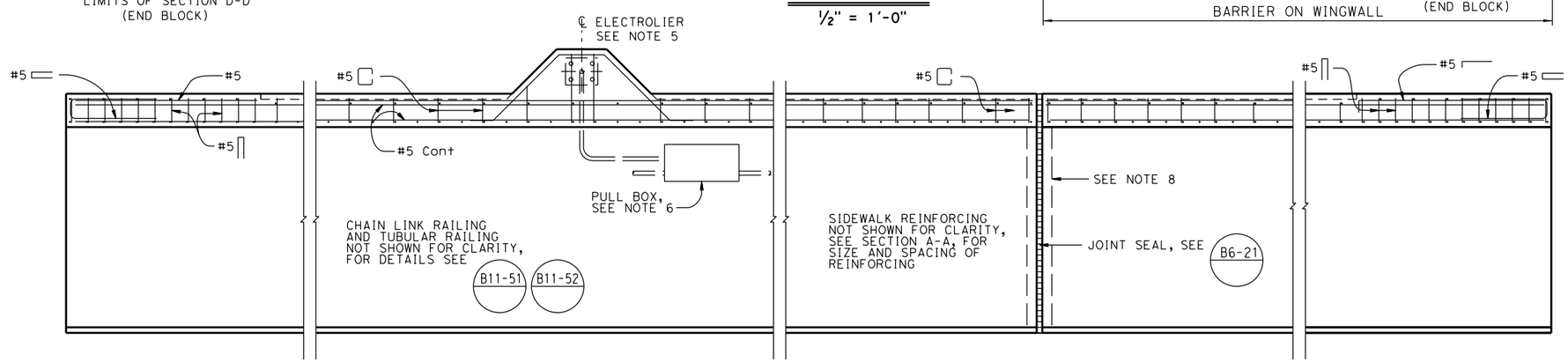

PLAN

½" = 1'-0"

NOTES:

1. This barrier is to be used only for speeds of 45 MPH or less. For speeds greater than 45 MPH, pedestrians should be protected by a separation traffic barrier.
2. Dimensions will vary with cross slope and surfacing thickness. See other sheets.
3. Walls must be backfilled before curb and parapet is placed.
4. Clearance to reinforcing steel in curb and railing is 2" except as noted. Longitudinal reinforcement to stop at all expansion joints.
5. See Project Plans for electrolier locations and pull box type.
6. For electrical details, see Standard Plans ES-9A, ES-9B, ES-9C, ES-9D, and ES-9E.
7. Two - 4" round openings for future utilities must be located a minimum of 6" from face of barrier and a minimum of 1'-6" from the face of curb. Openings must be sealed at ends and extended 8" minimum past end of sidewalk if not used. Duct forms must be tied down. For exact number and placement of utility openings see project plans.
8. See Project Plans for "Joint Armor For Pedestrian Walkways" details.
9. Tubular hand railing and chain link railing continuous at pedestal.

95% PLANS NOT FOR CONSTRUCTION

USERNAME => unttitled DATE PLOTTED => $DATE TIME PLOTTED => 5:03:10 PM

DESIGN OVERSIGHT

SIGN OFF DATE

	BY	CHECKED
DESIGN	T. Osterkamp	M. Iley
DETAILS	R. Liptak	M. Iley
QUANTITIES	R. Liptak	M. Iley

PREPARED FOR THE **CITY OF VICTORVILLE**

T. Osterkamp
PROJECT ENGINEER

BRIDGE NO. 54C0547
POST MILES

BEAR VALLEY ROAD OVERHEAD
CONCRETE BARRIER TYPE 732SW No. 1

DESIGN DETAIL SHEET (ENGLISH) (REV. 03/14/12)

ORIGINAL SCALE IN INCHES FOR REDUCED PLANS 0 1 2 3

UNIT:
PROJECT NUMBER & PHASE:
CONTRACT NO.:

DISREGARD PRINTS BEARING EARLIER REVISION DATES

REVISION DATES: X

SHEET 22 OF 27

FILE => J:\2007_Bear_Vly_BR_Widen\517\2007732SW1.dgn

DIST	COUNTY	ROUTE	POST MILES TOTAL PROJECT	SHEET No	TOTAL SHEETS
08	SB	CR		78	82

REGISTERED CIVIL ENGINEER DATE

PLANS APPROVAL DATE

REGISTERED PROFESSIONAL ENGINEER T. OSTERKAMP No. C46783 Exp. 6/30/17 CIVIL STATE OF CALIFORNIA

The State of California or its officers or agents shall not be responsible for the accuracy or completeness of scanned copies of this plan sheet.

DOKKEN ENGINEERING
110 BLUE RAVINE ROAD, SUITE 200
FOLSOM, CA 95630

RAILING AND FENCE NOT SHOWN FOR CLARITY

FOR DIMENSIONS AND REINFORCING NOT SHOWN SEE SECTION C-C (WITH APPROACH SLAB)

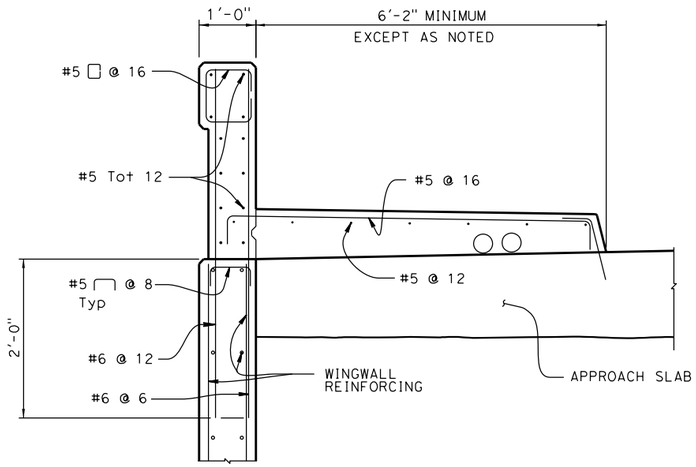

(WITH APPROACH SLAB)

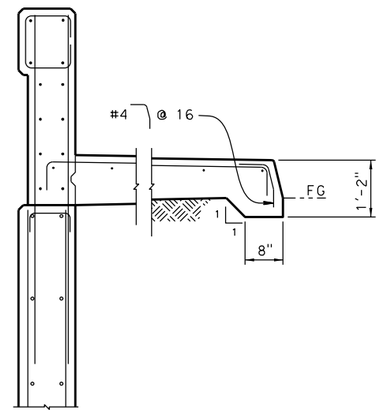

(WITHOUT APPROACH SLAB)

SECTION C-C

3/4" = 1'-0"

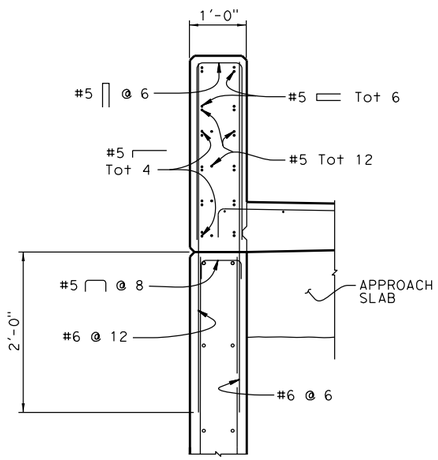

NOTE:
FOR SIDEWALK SEE SECTION C-C

SECTION D-D

3/4" = 1'-0"

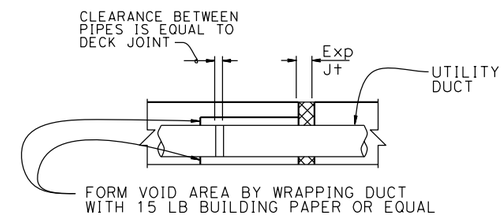

UTILITY DUCT EXPANSION JOINT

1 1/2" = 1'-0"

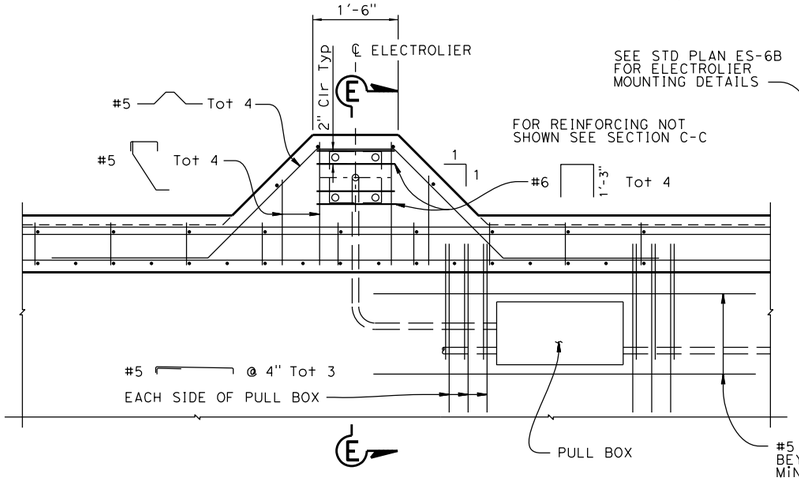

PEDESTAL PLAN

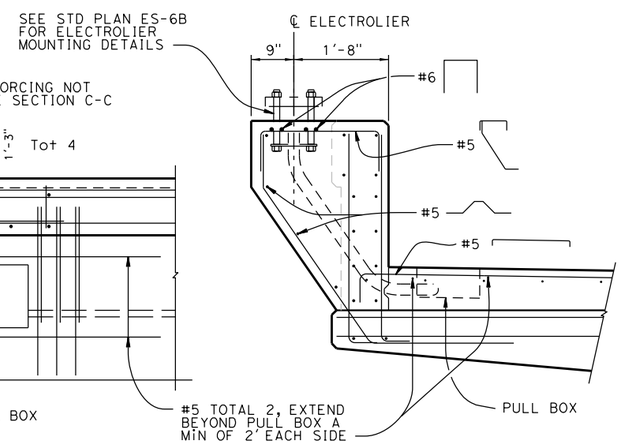

SECTION E-E

FOR REINFORCING NOT SHOWN SEE SECTION C-C

FOR DIMENSIONS AND Reinf NOT SHOWN SEE SECTION C-C

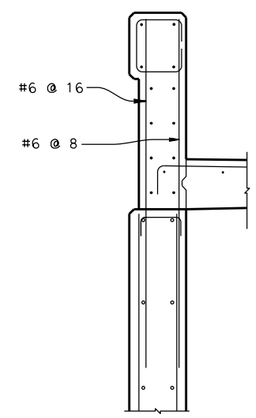

SECTION F-F

3/4" = 1'-0"

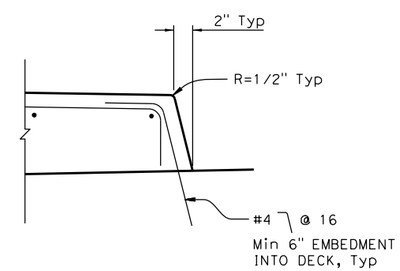

CURB DETAIL

1 1/2" = 1'-0"

PEDESTAL DETAILS

3/4" = 1'-0"

95% PLANS NOT FOR CONSTRUCTION

USERNAME => untitled DATE PLOTTED => $DATE TIME PLOTTED => 5:03:10 PM

DESIGN OVERSIGHT

SIGN OFF DATE

	BY	CHECKED
DESIGN	T. Osterkamp	M. Iley
DETAILS	R. Liptak	M. Iley
QUANTITIES	R. Liptak	M. Iley

PREPARED FOR THE CITY OF VICTORVILLE

T. Osterkamp
PROJECT ENGINEER

BRIDGE NO. 54C0547
POST MILES

BEAR VALLEY ROAD OVERHEAD
CONCRETE BARRIER TYPE 732SW No. 2

DESIGN DETAIL SHEET (ENGLISH) (REV. 03/14/12)

ORIGINAL SCALE IN INCHES FOR REDUCED PLANS 0 1 2 3

UNIT:
PROJECT NUMBER & PHASE: CONTRACT NO.:

DISREGARD PRINTS BEARING EARLIER REVISION DATES

REVISION DATES x

SHEET 23 OF 27

FILE => J:\2007_Bear_Vly_BR_Widen\517\2007732SW2.dgn

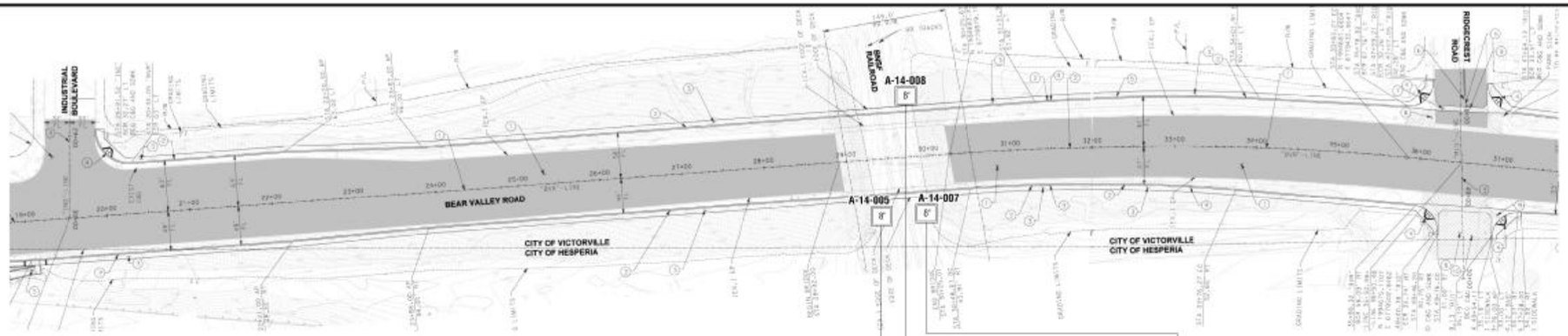

PLAN

SCALE: 1" = 80'

NOTES:

1. The consistency/apparent density descriptions are from Figures 2-9 and 2-10 of the Caltrans "Soil and Rock Logging, Classification, and Presentation Manual". These descriptions are based upon the Standard Penetration Test (ASTM D 1586) corrected for Hammer Energy Ratio and the Modified California sampling method (ASTM D 3550). The descriptions based on the Mod Cal blow counts have been correlated to SPT blow counts based on a correction factor of 0.55 (Rogers, 2006).

2. Relatively undisturbed soil samples were obtained by driving a 3-inch outside diameter, with a 2.5-inch inside diameter (California Modified) split-spoon sampler for Modified California Sampling Methods and a 2-inch outside diameter split-spoon sampler for Standard Penetration Test Sampling Methods.

3. The boring logs and related information represent the opinion of the professionals given as to the character of the materials at the locations shown. Soil and groundwater conditions between adjacent boreholes should be expected to vary. Actual conditions may differ from those shown. Groundwater conditions may change with passage of time.

4. Test boring elevations are approximate based on topography as based on mapping provided for this project.

5. Test boring locations were determined in the field based on scaling and pacing from mapped site features. The locations shown should be considered accurate only to the degree implied by the measuring methods used.

6. A 140-pound automatic hammer falling 30 inches was used to drive samplers.

7. Visual classification of earth materials was based on field inspection and was confirmed or revised with laboratory test results.

8. This LOTB sheet was prepared in accordance with the Caltrans Soil & Rock Logging, Classification, and Presentation Manual (2010).

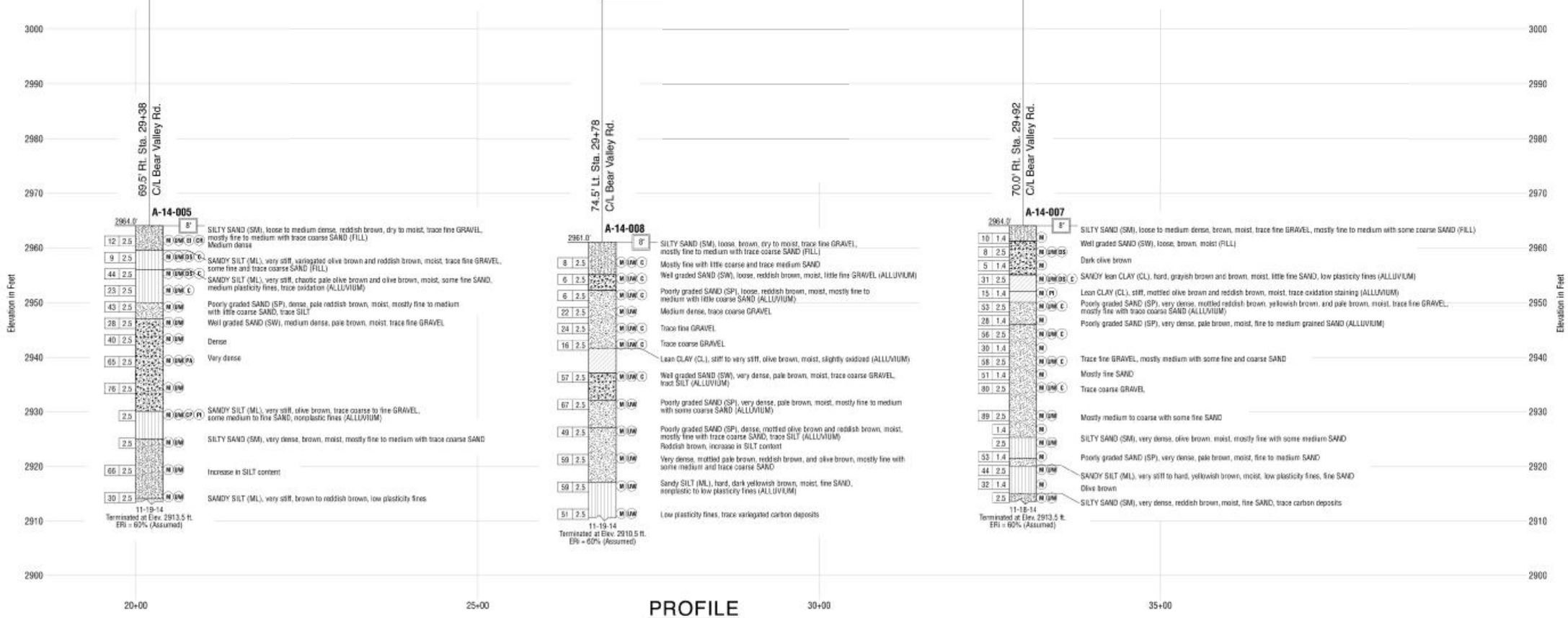

PROFILE

HORIZONTAL SCALE: 1" = 80'
VERTICAL SCALE: 1" = 10'

NO.	REVISION	BY	DATE

DESIGNED: JELISA THOMAS
DRAWN: DIRK HANSEN
CHECKED: JELISA THOMAS

RECORD DRAWING DATE:
SCALE HORIZ: 80' VERT: 10'
PROJECT NO. XXXXX
CAD FILE: ...\5112007_A01.dgn

CITY OF VICTORVILLE
ENGINEERING DIVISION
14343 CIVIC DRIVE,
VICTORVILLE, CA 92392
(760) 955-5158

DOKKEN ENGINEERING
110 BLUE RAVINE ROAD SUITE 200, FOLSOM CA. 916-858-0642
JUANN RAMOS, PROJECT ENGINEER DATE

REGISTERED PROFESSIONAL ENGINEER JELISA THOMAS CIVIL STATE OF CALIFORNIA

BEAR VALLEY ROAD OH AT BNSF RAILROAD

LOG OF TEST BORING NO. 2

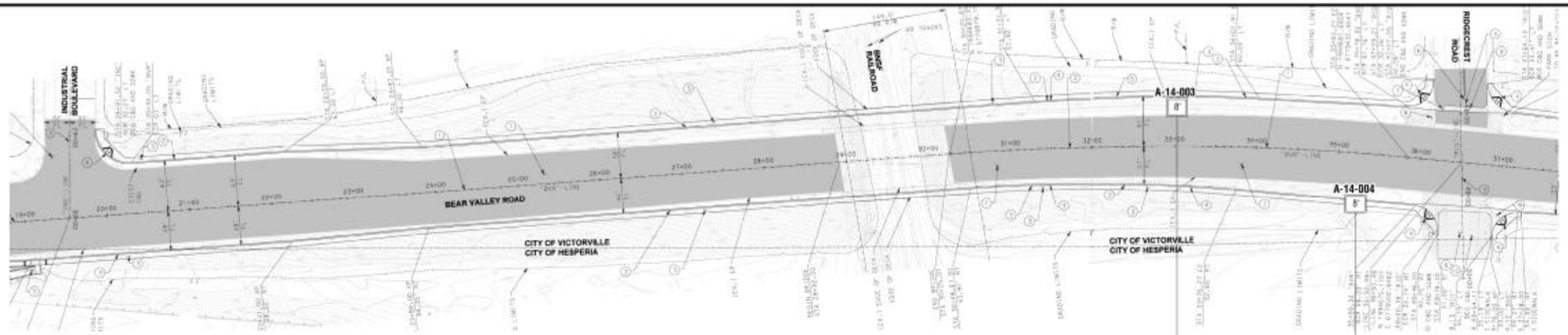

PLAN

SCALE: 1" = 80'

NOTES:

1. The consistency/apparent density descriptions are from Figures 2-9 and 2-10 of the Caltrans "Soil and Rock Logging, Classification, and Presentation Manual". These descriptions are based upon the Standard Penetration Test (ASTM D 1586) corrected for Hammer Energy Ratio and the Modified California sampling method (ASTM D 3550). The descriptions based on the Mod Cal blow counts have been correlated to SPT blow counts based on a correction factor of 0.55 (Rogers, 2006).

2. Relatively undisturbed soil samples were obtained by driving a 3-inch outside diameter, with a 2.5-inch inside diameter (California Modified) split-spoon sampler for Modified California Sampling Methods and a 2-inch outside diameter split-spoon sampler for Standard Penetration Test Sampling Methods.

3. The boring logs and related information represent the opinion of the professional engineer as to the character of the materials at the locations shown. Soil and groundwater conditions between adjacent boreholes should be expected to vary. Variations may differ from those shown. Ground water conditions may change with passage of time.

4. Test boring elevations are approximate based on topographic base sheet mapping prepared for this project.

5. Test boring locations were determined in the field based on scaling and pacing from mapped site features. The locations shown on the exploration sheet should be considered accurate only to the degree implied by the measuring methods used.

6. A 140-pound automatic hammer falling 30 inches was used to drive samplers.

7. Visual classification of earth materials was based on field inspection and was confirmed or revised with laboratory test results.

8. This LOTB sheet was prepared in accordance with the Caltrans Soil & Rock Logging, Classification, and Presentation Manual (2010).

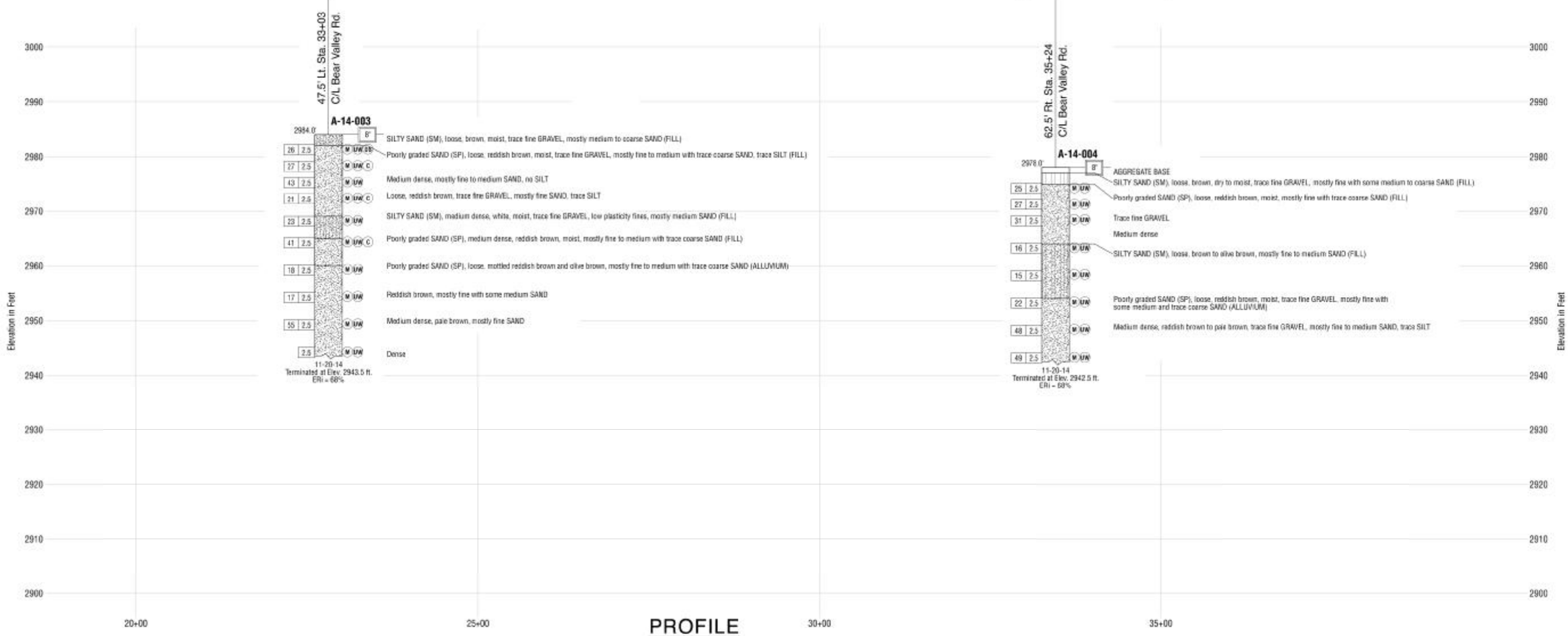

PROFILE

HORIZONTAL SCALE: 1" = 80'
VERTICAL SCALE: 1" = 10'

NO.	REVISION	BY	DATE

DESIGNED: JELISA THOMAS
DRAWN: DIRK HANSEN
CHECKED: JELISA THOMAS

RECORD DRAWING DATE:
SCALE HORIZ: 80' VERT: 10'
PROJECT NO. XXXXX
CAD FILE: ...\5111\2007_001.dgn

CITY OF VICTORVILLE
ENGINEERING DIVISION
14343 CIVIC DRIVE,
VICTORVILLE, CA 92392
(760) 955-5158

DOKKEN ENGINEERING
110 BLUE RAVINE ROAD SUITE 200, FOLSOM CA. 916-858-0642
JUANN RAMOS, PROJECT ENGINEER
DATE

REGISTERED PROFESSIONAL ENGINEER
JELISA THOMAS
CIVIL
STATE OF CALIFORNIA

BEAR VALLEY ROAD OH AT BNSF RAILROAD

LOG OF TEST BORING NO. 3

DWG. NO. 6

DIST	COUNTY	ROUTE	POST MILES TOTAL PROJECT	SHEET No	TOTAL SHEETS
08	SB	CR		82	82

REGISTERED CIVIL ENGINEER DATE

PLANS APPROVAL DATE

REGISTERED PROFESSIONAL ENGINEER T. OSTERKAMP No. C46783 Exp. 6/30/17 CIVIL STATE OF CALIFORNIA

The State of California or its officers or agents shall not be responsible for the accuracy or completeness of scanned copies of this plan sheet.

DOKKEN ENGINEERING
110 BLUE RAVINE ROAD, SUITE 200
FOLSOM, CA 95630

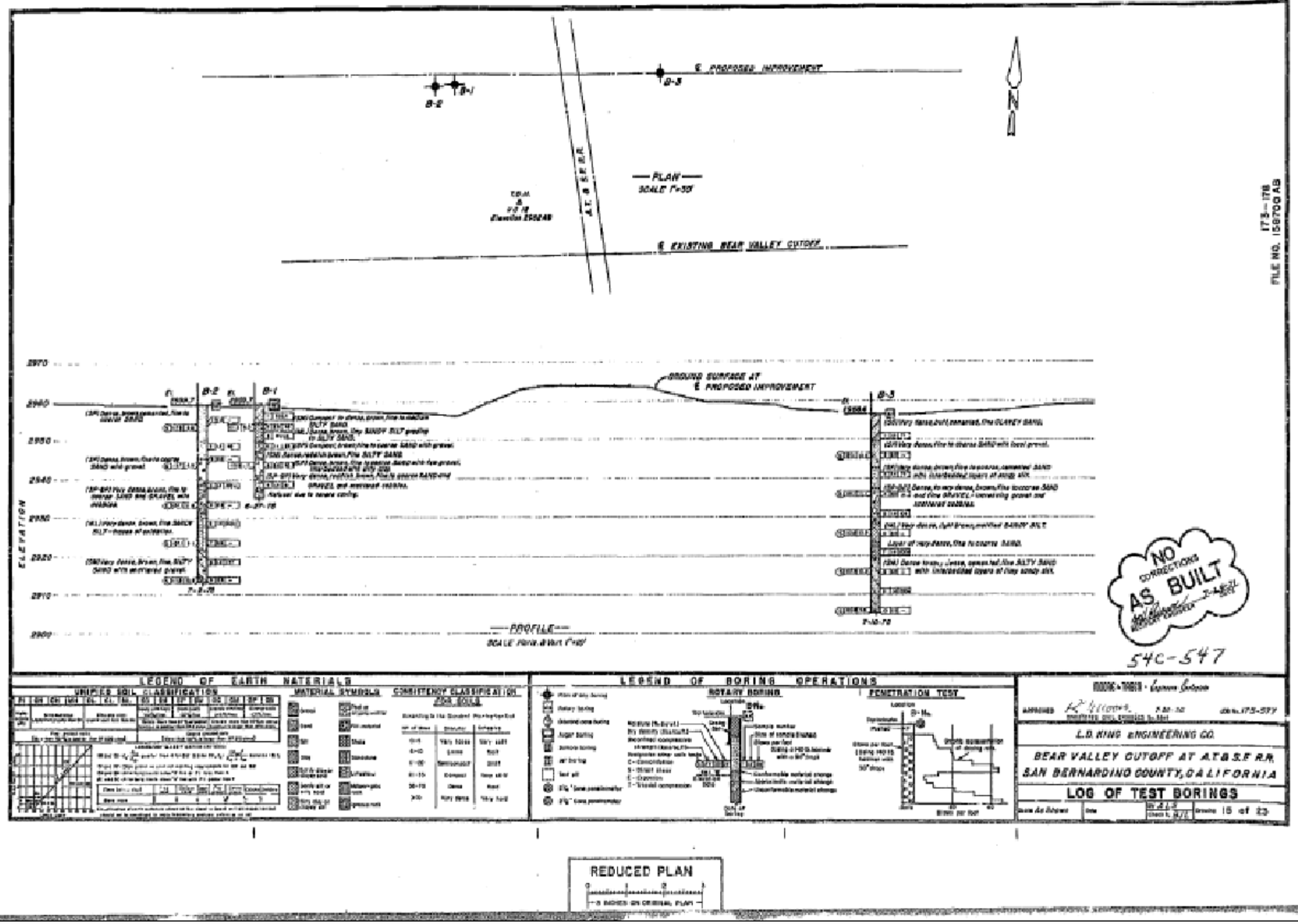

175-178
FILE NO. 159700 AB

GEOTECHNICAL SERVICES - DIVISION OF ENGINEERING SERVICES

As-Built Log of Test Borings sheet is considered an informational document only. As such, the State of California registration seal with signature, license number and registration certificate expiration date confirm that this is a true and accurate copy of the original document. It does not attest to the accuracy or validity of the information contained in the original document. This drawing is available and presented only for the convenience of any bidder, contractor or other interested party.

DIST	COUNTY	ROUTE	POST MILES - TOTAL PROJECT	SHEET NO.	TOTAL SHEETS
-	SBd	LOCAL	-	-	-

REGISTERED ENGINEER - CIVIL DATE

BEAR VALLEY ROAD OH
(AS BUILT) LOG OF TEST BORINGS

NOTE: A COPY OF THIS LOG OF TEST BORINGS IS AVAILABLE AT OFFICE OF STRUCTURE MAINTENANCE AND INVESTIGATIONS, SACRAMENTO, CALIFORNIA

CU: - EA: - BRIDGE NO. 54C-547

95% PLANS NOT FOR CONSTRUCTION

USERNAME => unfitled DATE PLOTTED => $DATE TIME PLOTTED => 5:05:35 PM

DESIGN OVERSIGHT

SIGN OFF DATE

	BY	CHECKED
DESIGN	T. Osterkamp	M. Iley
DETAILS	R. Liptak	M. Iley
QUANTITIES	R. Liptak	M. Iley

PREPARED FOR THE CITY OF VICTORVILLE

T. Osterkamp
PROJECT ENGINEER

BRIDGE NO. 54C0547
POST MILES

BEAR VALLEY ROAD OVERHEAD
(AS BUILT) LOG OF TEST BORINGS

DESIGN DETAIL SHEET (ENGLISH) (REV. 03/14/12)

ORIGINAL SCALE IN INCHES FOR REDUCED PLANS 0 1 2 3

UNIT:
PROJECT NUMBER & PHASE: CONTRACT NO.:

DISREGARD PRINTS BEARING EARLIER REVISION DATES

REVISION DATES: X

SHEET 27 OF 27

FILE => J:\2007_Bear_Vly_BR_Widen\517\2007ASBUILTLOTB.dgn

APPENDIX D

APPENDIX D

AS-BUILT PLANS

FOR

BEAR VALLEY CUTOFF, APATITE STREET TO TAMARISK AVENUE,
VICTORVILLE, CALIFORNIA

COUNTY OF SAN BERNARDINO
TRANSPORTATION DEPARTMENT

PLANS FOR CONSTRUCTION ON

BEAR VALLEY CUTOFF — A GRADE SEPARATION WITH A.T. & S.F. RAILWAY

APATITE STREET TO TAMARISK AVENUE

WORK ORDER NO. H05347 ROAD NO. 178700AB

TO BE SUPPLEMENTED BY STANDARD PLANS DATED MARCH 1977
AND SAN BERNARDINO COUNTY STANDARD DRAWINGS

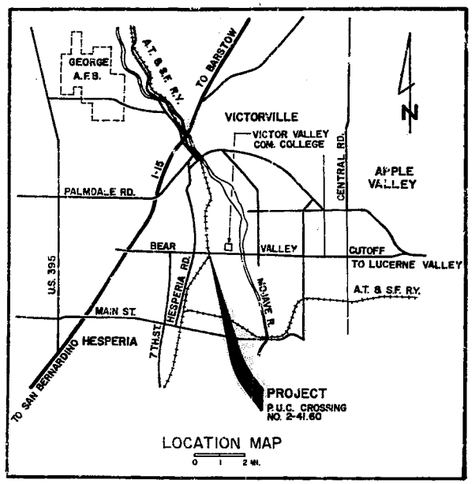

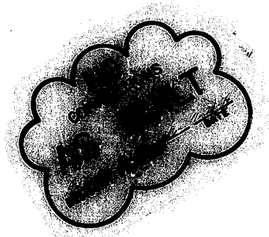

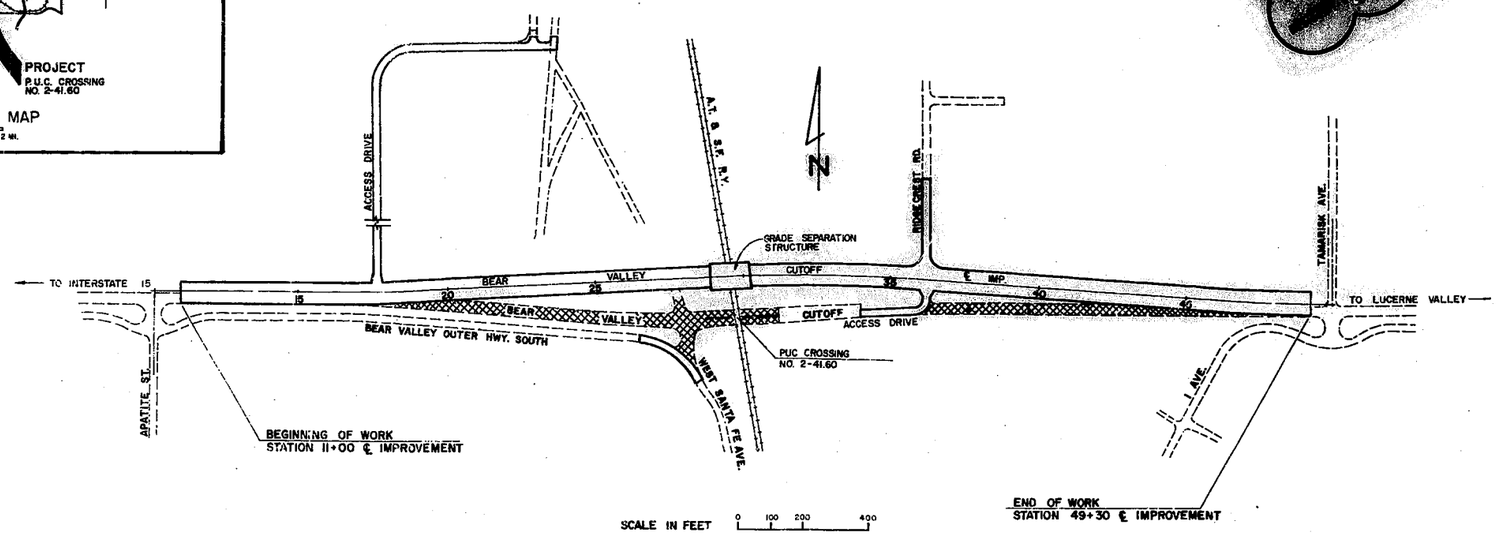

SCALE IN FEET 0 100 200 400

LENGTH OF WORK = 0.73 MILES

INDEX OF SHEETS

SHEET	DESCRIPTION
	ROADWAY
1	TITLE SHEET
2	TYPICAL SECTIONS
3-8	PLANS AND PROFILES
9	CONSTRUCTION DETAILS
10	SUMMARY OF DRAINAGE STRUCTURES AND SUMMARY OF QUANTITIES
11	CONSTRUCTION STAGING DIAGRAMS
12	SINGLE BOX CULVERT DETAILS
13	BOX CULVERT MISC. DETAILS
	STRUCTURE
14	GENERAL PLAN AND ELEVATION
15	LOG OF TEST BORINGS
16	FOUNDATION PLAN AND MISC. DETAILS
17	ABUTMENT 1
18	ABUTMENT 4
19	PIER 2 AND 3
20	DECK PLAN AND GIRDER LAYOUT
21	DECK DETAILS AND MISC. DETAILS
22	PRESTRESSED I GIRDER
23	SLOPE PAVING DETAILS
	CROSS SECTIONS
1-8	BEAR VALLEY CUTOFF
9	ACCESS DRIVE
10	ACCESS DRIVE
11-12	RIDGECREST RD., W. SANTE FE AVE. AND DITCHES

STANDARD PLANS

STATE OF CALIF., BUSINESS AND TRANSPORTATION AGENCY, DEPARTMENT OF TRANSPORTATION, STANDARD PLANS MARCH 1977 EDITION

A62-A3, A62-B8, A62-CA, A62-CB, A62-CC, A62-CD, A73-10, A74-A7, A74-B3, A77-C.8W, A77-E4, A78-A6, A78-B2, A78-C7, B0-3, B0-5, B6-21, B7-10, B11-53, B11-54, D84-3, D88-5, D97-B, D97-C, D97-D

SAN BERNARDINO COUNTY STANDARD DRAWINGS

115, 117, 119, 129, 203, 204, 206, 206 A, 206 B

LINDBERG CONSULTING ENGINEERS
ONTARIO, CALIFORNIA
RCE NO. 15268 DATE 12-8-77

FOR DE LEUW, CATHER & CO. RSE 1209

COUNTY OF SAN BERNARDINO
APPROVED BY _____ 12-28-78
COUNTY ROAD COMMISSIONER RCE 10818 DATE

SHEET NO.	TOTAL SHEETS
1	23

REDUCED PLAN
0 1 2 3
3 INCHES ON ORIGINAL PLAN

173-178
FILE NO. 158700 AB

173-178
FILE NO. 158700 AB

SHEET NO.	SHEETS
2	23

LOCKING CONSULTING ENGINEERS
ONTARIO, CALIFORNIA
D. H. Mayo
RCE NO. 21062 DATE 12-8-77

COUNTY OF SAN BERNARDINO
TRANSPORTATION DEPARTMENT
HESPERIA AREA

BEAR VALLEY CUTOFF

APATITE STREET TO TAMARISK AVENUE

TYPICAL CROSS SECTIONS

W.O. NO. H05347 | FIELD BOOK REF.
SUBMITTED BY | RECOMMENDED/APPROVED BY
PROJECT ENGINEER DATE | ADMINISTRATOR DATE
DESIGN ENGINEER DATE | COUNTY ENGINEER DATE

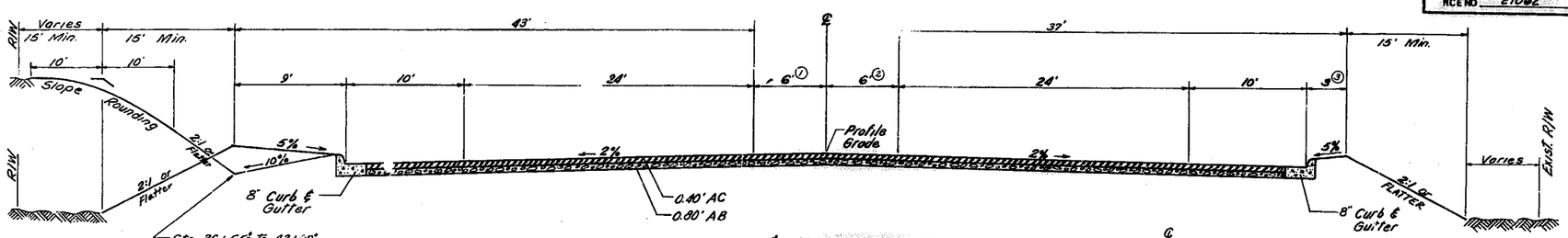

¢ IMPROVEMENT
BEAR VALLEY CUTOFF
Sta. 11+25 to 48+75

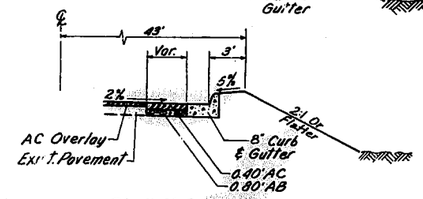

Sta. 11+00 to 15+50± Rt.
Sta. 45+50± to 49+30 Rt.
(Pavement Widening)

LEGEND

- Asphalt Concrete (A.C.)
- Aggregate Base (A.B.)
- Concrete (P.C.C.)
- Original Ground

DESIGN DESIGNATION

A.D.T. (1975)	6100	D = 65 %
A.D.T. (1996)	14,500	T = 3 %
D.H.V.	1400	V = 65 MPH
		TI = 10

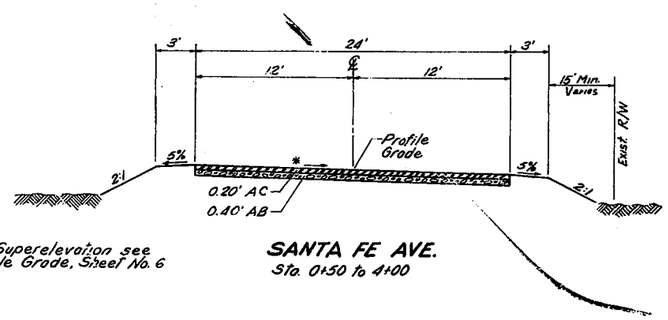

* For Superelevation see Profile Grade, Sheet No. 6

SANTA FE AVE.
Sta. 0+50 to 4+00

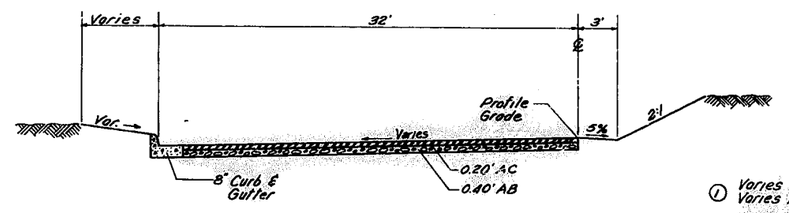

RIDGECREST RD.
Sta. 1+30± to 3+92.66

① Varies from 6' at Sta. 24+71.77 ℄ Imp. to 2' at Sta. 28+71.77 ℄ Imp.
Varies from 2' at Sta. 30+38.15 ℄ Imp. to 6' at Sta. 34+38.15 ℄ Imp.

② Varies from 6' at Sta. 24+79.11 ℄ Imp. to 2' at Sta. 28+79.11 ℄ Imp.
Varies from 2' at Sta. 30+45.49 ℄ Imp. to 6' at Sta. 34+45.49 ℄ Imp.

③ Varies from 3' at Sta. 24+79.11 ℄ Imp. to 7' at Sta. 28+79.11 ℄ Imp.

Note: All transitions; the rate of change is constant

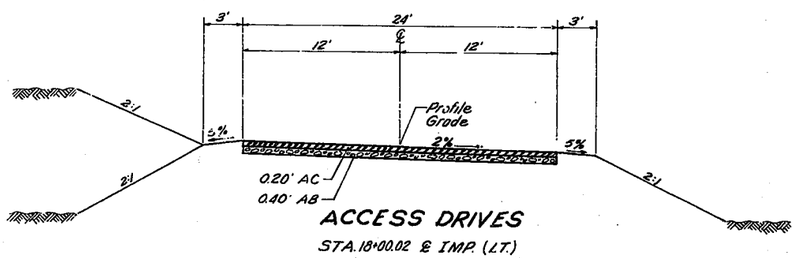

ACCESS DRIVES

STA. 18+00.02 ℄ IMP. (LT.)
(Sta. 10+40 to 25+80) *

STA 36+34.68 ℄ IMP. (RT.)
(Sta. 0+40± to 3+50)

* A.C. Paving to Sta. 11+02 Earth
Sta. 11+02 to 25+80

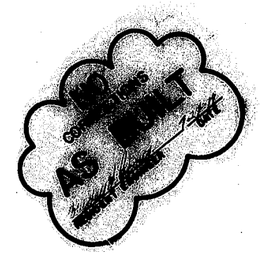

1. Dimensions shown are subject to tolerances specified in the Standard Specifications.
2. Warp A.C. at intersections, overlays and transitions as directed by the Engineer.
3. Super elevation as directed by the Engineer and rotates about the point; (Profile Grade).
4. The second paragraph of Section 19-5.03, "Relative Compaction (95 %) of the Standard Specifications will not apply to Santa Fe Ave., Ridgecrest Rd., and the Access Drives.
5. Relative Compaction of 90 % will be required on the unpaved portion of the Access Drive whether in excavation or embankment.

173-178
FILE NO. 158700 AB

DATE	APPR.	REVISIONS	MARK

DRAWN	CHECKED	
DESIGNED		

173-178
FILE NO. 158700 AB

REDUCED PLAN
0 1 2 3
3 INCHES ON ORIGINAL PLAN

1. Utilities are to be removed or relocated as necessary by others unless otherwise noted.
2. Existing utilities were plotted using available record information. The contractor shall notify the utility companies and verify the location of utilities prior to construction.
3. The contractor shall verify the exact location of removal items prior to construction.
4. The contractor shall maintain access to residences and businesses at all times during construction.

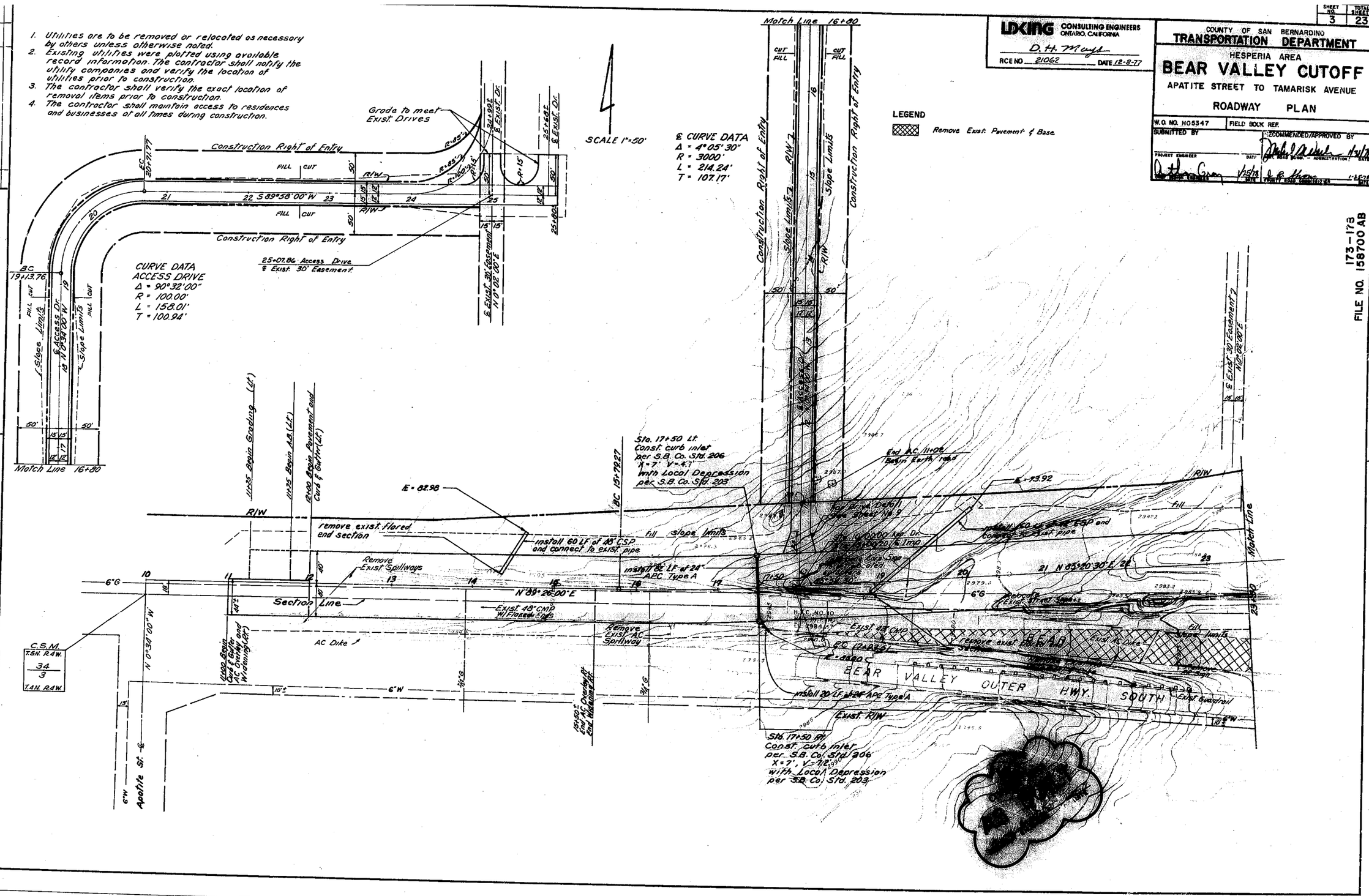

LDKING CONSULTING ENGINEERS
ONTARIO, CALIFORNIA
D. H. Murph
RCE NO. 21062 DATE 12-8-77

SHEET NO. 3 TOTAL SHEETS 23

COUNTY OF SAN BERNARDINO
TRANSPORTATION DEPARTMENT
HESPERIA AREA

BEAR VALLEY CUTOFF

APATITE STREET TO TAMARISK AVENUE

ROADWAY PLAN

W.O. NO. H05347 | FIELD BOOK REF.

SUBMITTED BY | RECOMMENDED/APPROVED BY

PROJECT ENGINEER | DATE | DEPT. HEAD DESIGN — ADMINISTRATION | DATE

1/25/78 | 1-26-78

FILE NO. 173-178 158700 AB

REDUCED PLAN
0 1 2 3
3 INCHES ON ORIGINAL PLAN

FILE NO. 173-178 158700 AB

LDKING CONSULTING ENGINEERS
ONTARIO, CALIFORNIA
D. H. Meyer
RCE NO. 21062 DATE 12-8-27

COUNTY OF SAN BERNARDINO
TRANSPORTATION DEPARTMENT
HESPERIA AREA

BEAR VALLEY CUTOFF

APATITE STREET TO TAMARISK AVENUE

ROADWAY PROFILES

W.O. NO. H05347 | FIELD BOOK REF
SUBMITTED BY | RECOMMENDED/APPROVED BY
PROJECT ENGINEER DATE | ADMINISTRATOR DATE
COUNTY TRANS. COMMISSIONER DATE

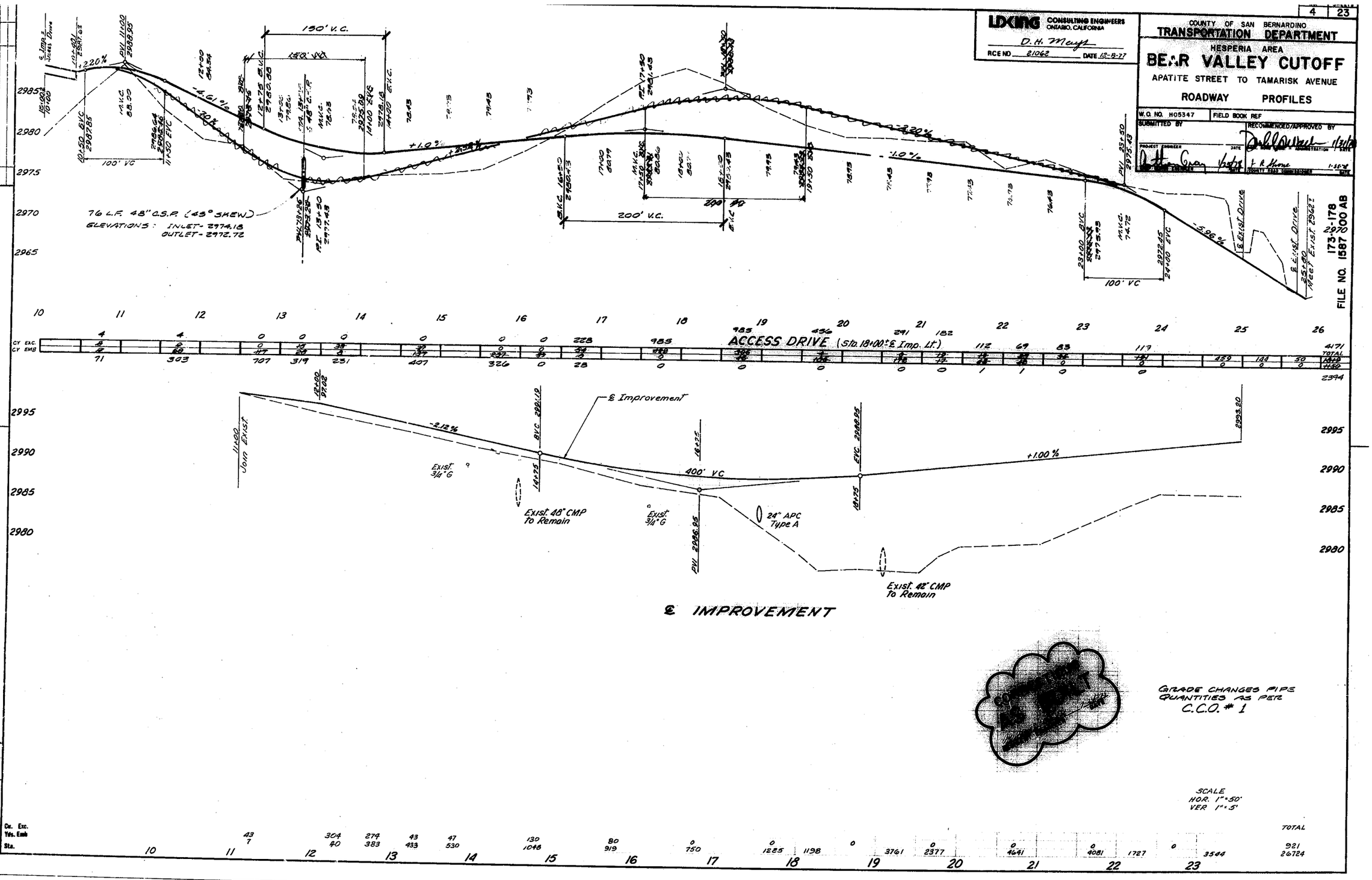

FILE NO. 1587 00 AB
173-178
297 00

REVISIONS | MARK | DATE | APPR.

LAB CHECKED | LAB NAMED | LAB CHECKED

FILE NO. 1587 00 AB
173-178

REDUCED PLAN
0 1 2 3
3 INCHES ON ORIGINAL PLAN

The basis of bearings is section line 34/3 from its point of intersection with the centerline of Apatite Street and section corner 34/35 3/2

The bearing of said section line being N89°26'00"E

The intersection of the centerlines of Bear Valley Cutoff and Apatite Street is Station 10+00.00, assumed.

The bearing of the Section Line being N89°26'00"E and is based on 1961 "as-built" plans. The Section Line distances are based on a 1975 County Survey

BENCH MARK
S.B.C.O. 703-40
Brass Disc in North East corner of concrete block signal base 10.5' East of Easterly R.R. rail and 0.2' North of Bear Valley Cutoff. (exist.)
Elev. = 2956.15

BENCH MARK
D-316 CSFB 4153/280
Chisel □ on North East corner of PCC Drainage Inlet, 170'± East and 30' South of the intersection of Bear Valley Cutoff and Jacaranda Elev. = 2885.26

LDKING CONSULTING ENGINEERS
ONTARIO, CALIFORNIA
D. H. Musgr
RCE NO. 21062 DATE 12-8-77

COUNTY OF SAN BERNARDINO
TRANSPORTATION DEPARTMENT
HESPERIA AREA
BEAR VALLEY CUTOFF
APATITE STREET TO TAMARISK AVENUE
ROADWAY PLAN

W.O. NO. H05347 | FIELD BOOK REF.
SUBMITTED BY | RECOMMENDED/APPROVED BY
PROJECT ENGINEER DATE | ASST. ROAD COMM. ADMINISTRATION DATE 1/3/78
DEPUTY ROAD COMMISSIONER DATE 1-13-78

CORRECTIONS AS BUILT
PROJECT ENGINEER DATE

SCALE 1"=50'

℄ CURVE DATA
Δ = 10°38'30"
R = 3000'
L = 557.20'
T = 279.40'

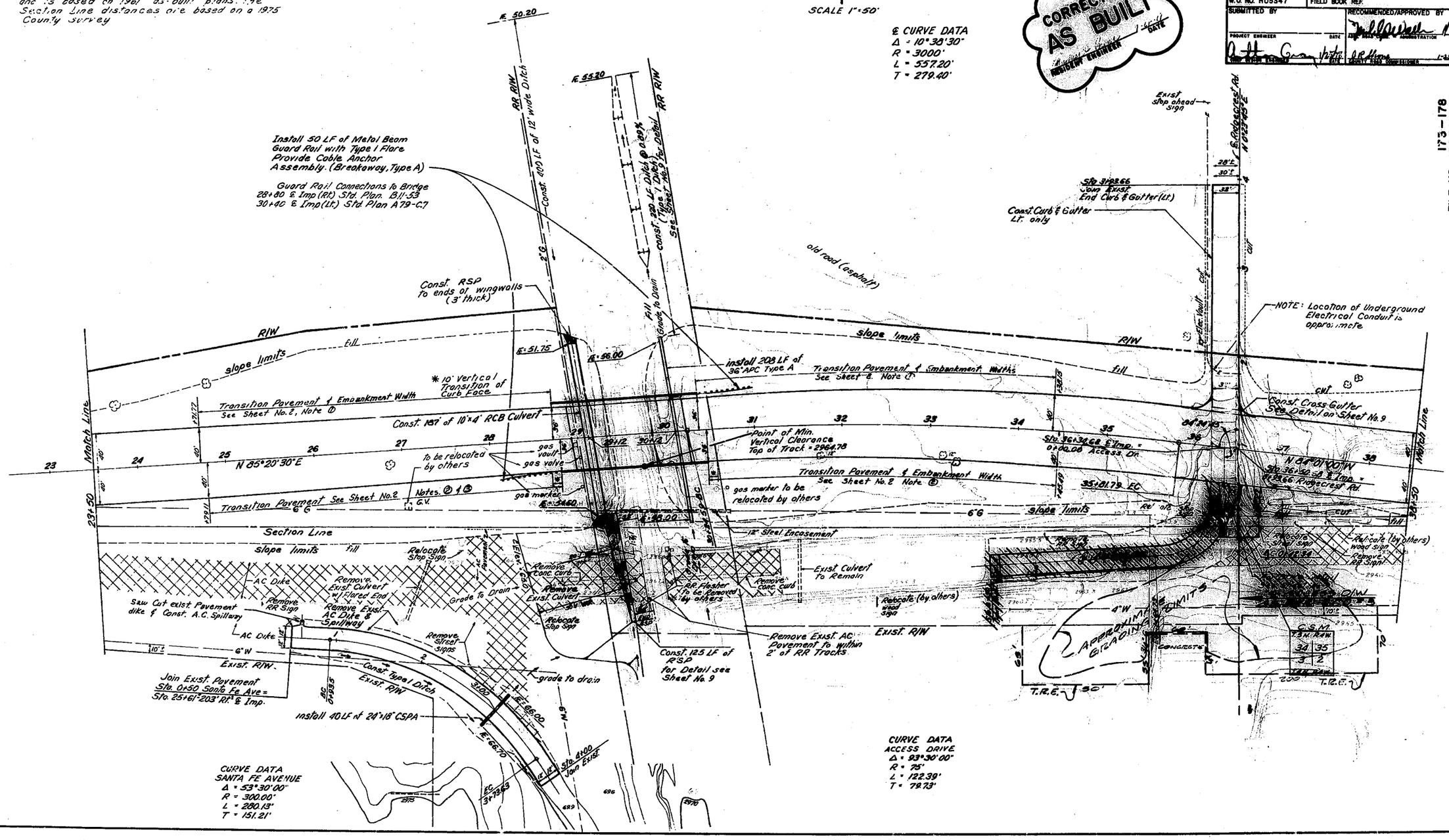

REDUCED PLAN
0 1 2 3
3 INCHES ON ORIGINAL PLAN

FILE NO. 173-178 158700 AB

MARK	REVISIONS	APPR	DATE

DESIGNED BY DRAWN CHECKED BY

FILE NO. 173-178 158700 AB

SHEET NO.	TOTAL SHEETS
6	23

LDKING CONSULTING ENGINEERS
ONTARIO, CALIFORNIA
D. H. Mayo
RCE NO. 21062 DATE 12-8-77

COUNTY OF SAN BERNARDINO
TRANSPORTATION DEPARTMENT
HESPERIA AREA

BEAR VALLEY CUTOFF

APATITE STREET TO TAMARISK AVENUE

ROADWAY — PROFILES

W.O. NO. H06347 | FIELD BOOK REF.

SUBMITTED BY — PROJECT ENGINEER — DATE

RECOMMENDED/APPROVED BY — DIV. ROAD YARD — ADMINISTRATION — DATE

COUNTY ROAD COMMISSIONER — DATE

FILE NO. 158700 AB 173-178

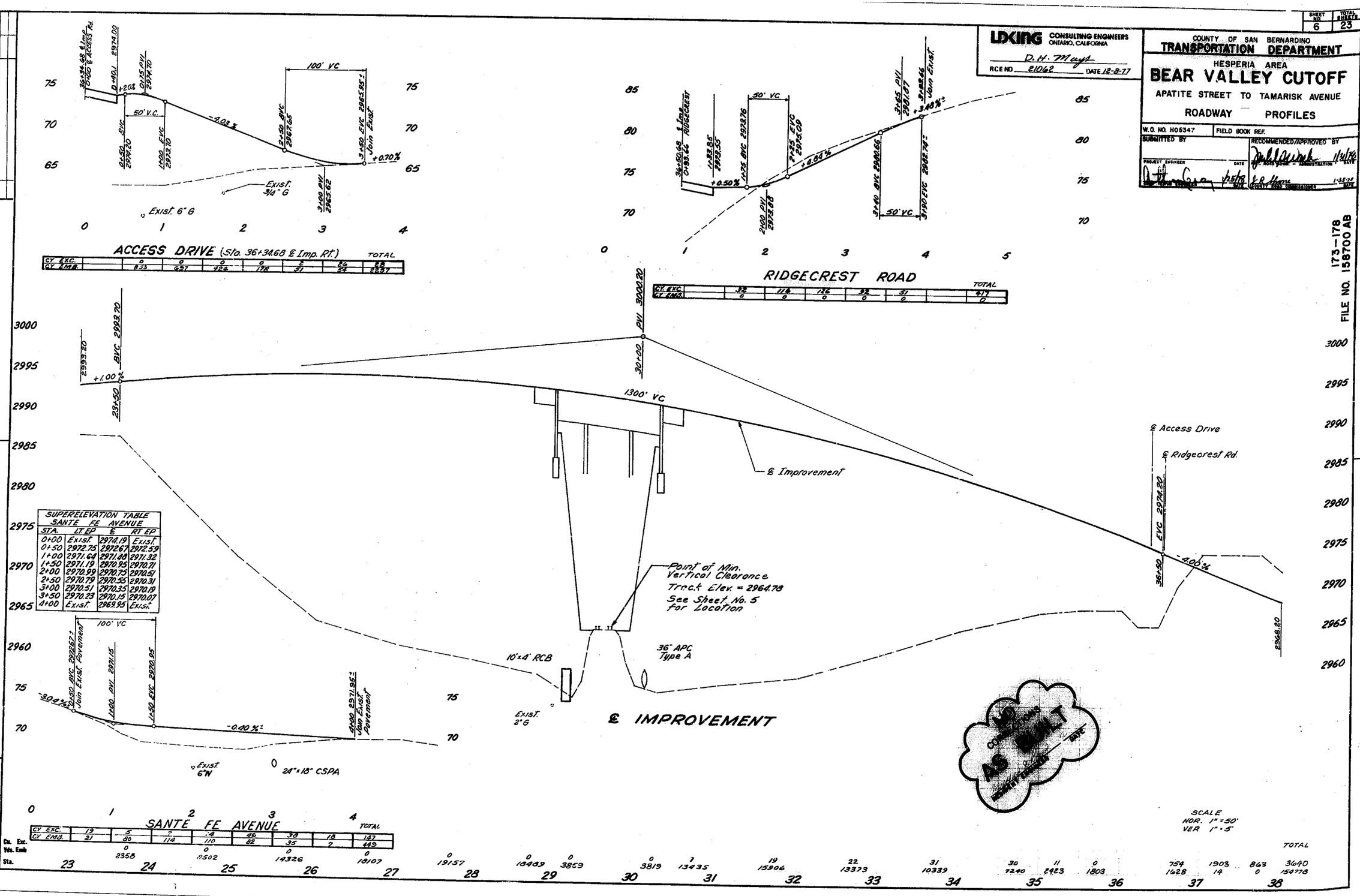

SUPERELEVATION TABLE
SANTE FE AVENUE

STA.	LT. EP	℄	RT. EP
0+00	Exist.	2974.19	Exist.
0+50	2972.75	2972.67	2972.59
1+00	2971.68	2971.60	2971.32
1+50	2971.19	2970.95	2970.71
2+00	2970.99	2970.75	2970.51
2+50	2970.79	2970.55	2970.31
3+00	2970.51	2970.35	2970.19
3+50	2970.23	2970.15	2970.07
4+00	Exist.	2969.95	Exist.

ACCESS DRIVE (S/O. 36+34.68 ℄ Imp. Rt.)

							TOTAL
CY EXC.	0	0	0	0	2	26	28
CY EMB.	835	427	424	178	51	54	2237

RIDGECREST ROAD

							TOTAL
CY EXC.	32	116	126	93	51		417
CY EMB.	0	0	0	0	0		0

SANTE FE AVENUE

								TOTAL
CY EXC.	19	5	7	4	46	38	18	147
CY EMB.	21	80	114	110	82	35	7	449

Sta.	23	24	25	26	27	28	29	30	31	32	33	34	35	36	37	38
Cu. Yds. Exc.	0	0	0	0	0	0	0	0	7	19	22	31	30	0	754	1903	843	3640
Yds. Emb.	2358	10502	14326	18107	19157	16483	3859	3819	13435	15906	13373	10339	7240	2423	1803	1628	14	0	154778

REDUCED PLAN
0 1 2 3

MARK	REVISIONS	APPR.	DATE

DESIGNED BY — DRAWN BY — CHECKED BY

FILE NO. 158700 AB 173-178

MARK	REVISIONS	APPR	DATE

LDKING CONSULTING ENGINEERS
ONTARIO, CALIFORNIA

D. H. May
RCE NO 21062 DATE 12-8-77

COUNTY OF SAN BERNARDINO
TRANSPORTATION DEPARTMENT

HESPERIA AREA

BEAR VALLEY CUTOFF

APATITE STREET TO TAMARISK AVENUE

ROADWAY PLAN

W.O. NO. H05347 | FIELD BOOK REF.

SUBMITTED BY — PROJECT ENGINEER — DATE

RECOMMENDED/APPROVED BY — ASST. DIR. OF TRANSPORTATION — DATE

1/5/78 — DIR. OF TRANSPORTATION — DATE

1-16-78 — COUNTY BOARD OF SUPERVISORS — DATE

FILE NO. 173-178 158700 AB

SCALE 1"=50'

℄ CURVE DATA
Δ = 6°18'45"
R = 3000'
L = 330.52'
T = 165.43'

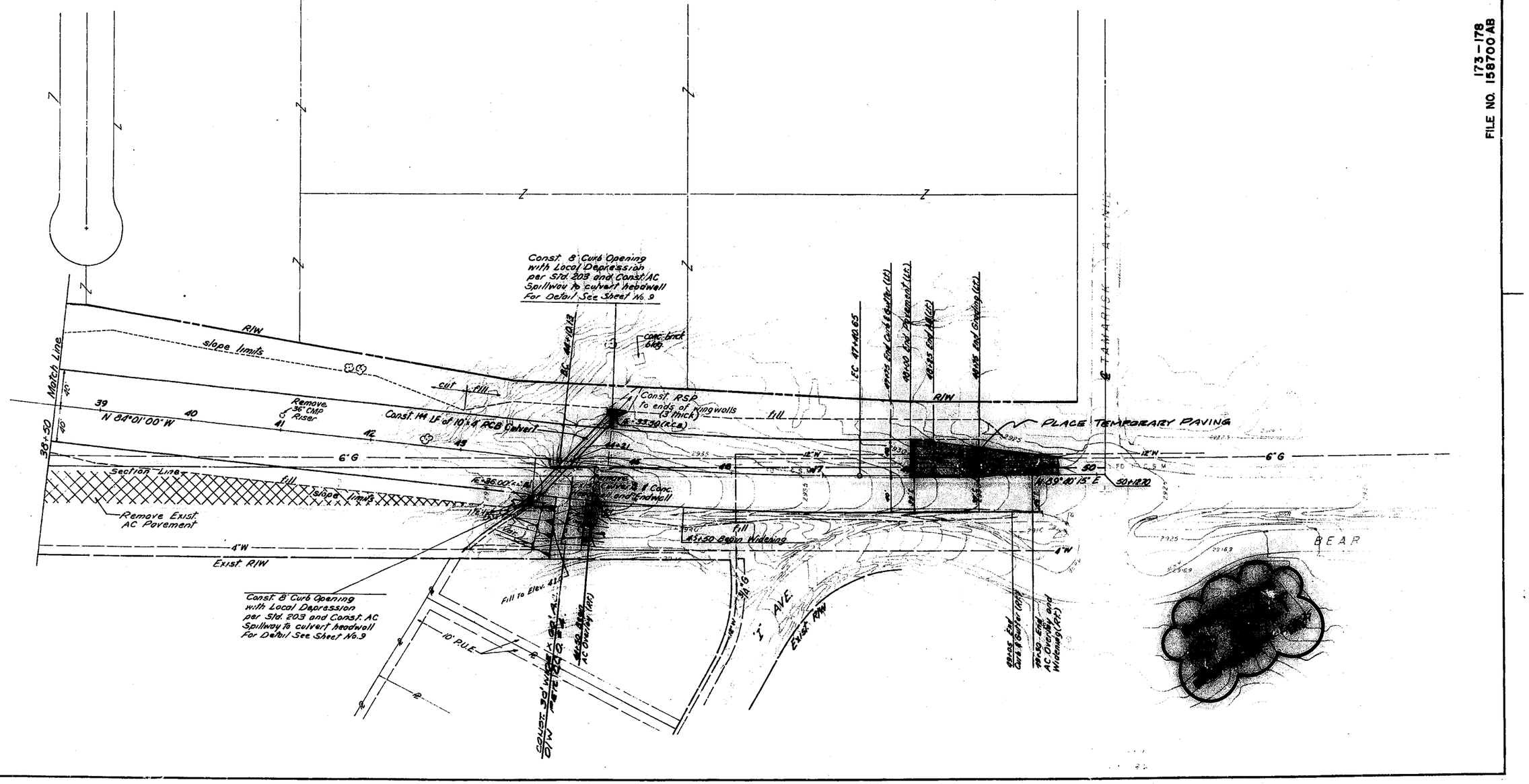

REDUCED PLAN
0 1 2 3
3 INCHES ON ORIGINAL PLAN

FILE NO. 173-178 158700 AB

MARK	REVISIONS	APPR	DATE

LOKING CONSULTING ENGINEERS
ONTARIO, CALIFORNIA
D.H. May
RCE NO. 21062 DATE 12-8-77

8 | 23

COUNTY OF SAN BERNARDINO
TRANSPORTATION DEPARTMENT
HESPERIA AREA

BEAR VALLEY CUTOFF

APATITE STREET TO TAMARISK AVENUE

ROADWAY PROFILES

W.O. NO. H05347 | FIELD BOOK REF.

SUBMITTED BY — PROJECT ENGINEER — DATE 1/25/80

RECOMMENDED/APPROVED BY — ADMINISTRATION — DATE 1/25/80 — FILE OF RIGHTS AND WAY ENGINEER — DATE 1-25-80

FILE NO. 173-178 158700 AB

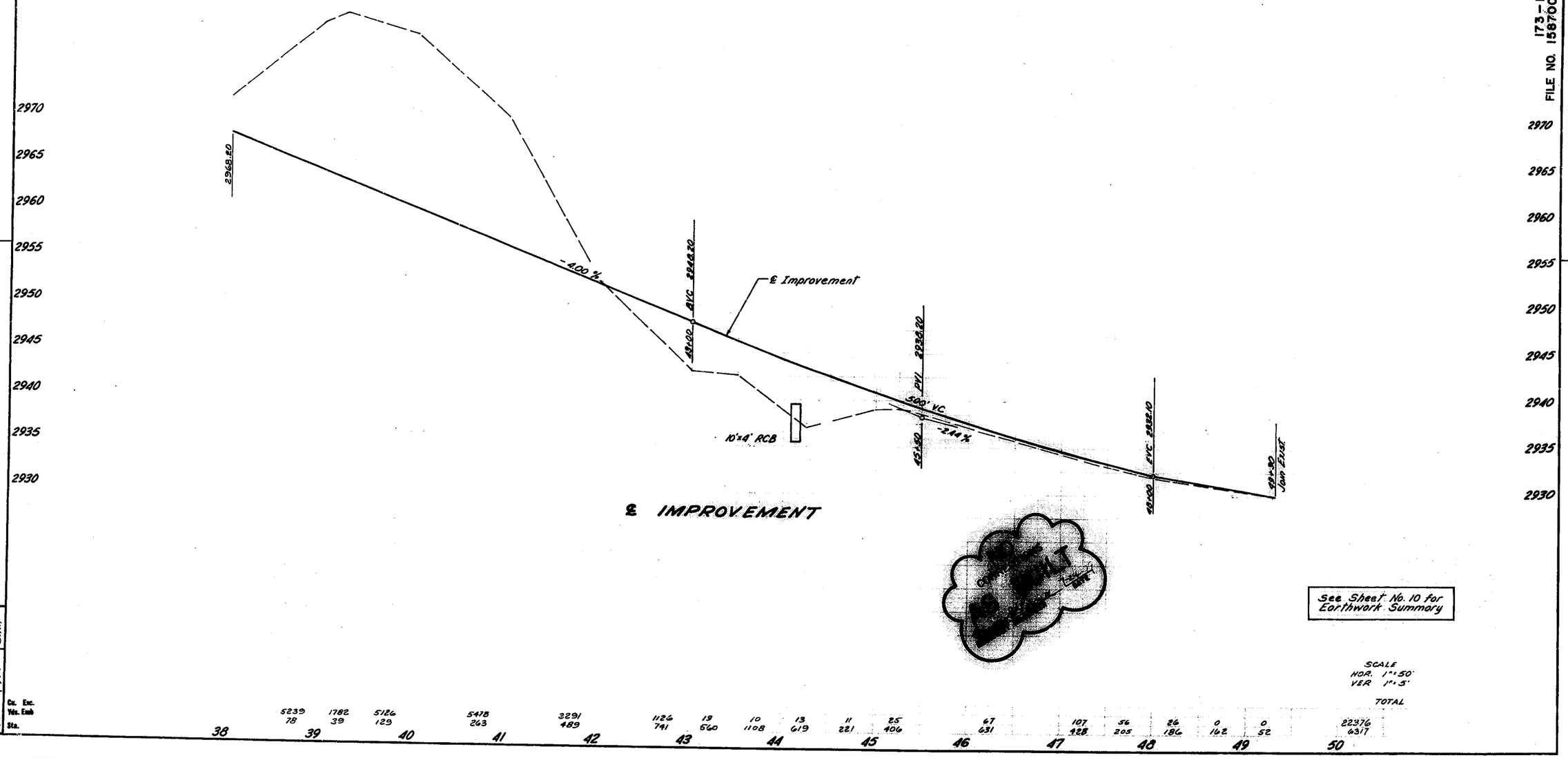

See Sheet No. 10 for Earthwork Summary

SCALE
HOR. 1" = 50'
VER 1" = 5'

LB CHICAGO | LB NAVAR | LB CHICAGO
173-178
FILE NO. 158700 AB

REDUCED PLAN
0 1 2 3
3 INCHES ON ORIGINAL PLAN

COUNTY OF SAN BERNARDINO
TRANSPORTATION DEPARTMENT
HESPERIA AREA
BEAR VALLEY CUTOFF
APATITE STREET TO TAMARISK AVENUE
CONSTRUCTION DETAILS

W.O. NO. H05347 | FIELD BOOK REF.
SUBMITTED BY | RECOMMENDED/APPROVED BY
PROJECT ENGINEER | DATE | ADMINISTRATION | DATE
DIVISION ENGINEER | DATE | DEPUTY DIRECTOR | DATE

FILE NO. 173-178 158700 AB

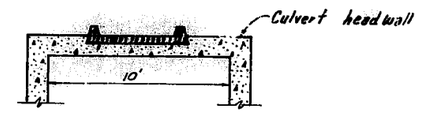

SECTION BB

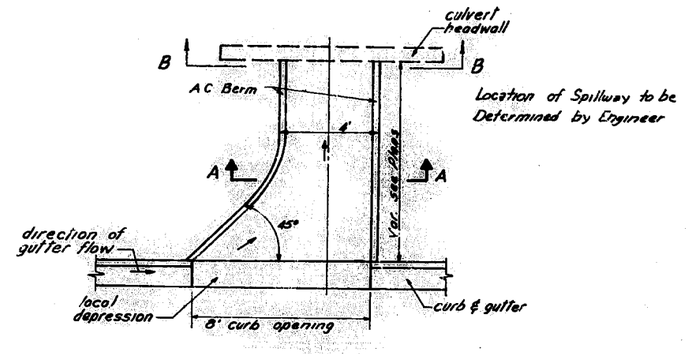

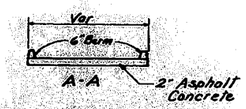

A.C. SPILLWAY DETAIL
Sta. 43+32 Rt. ℄ Imp.
Sta. 44+64 Lt. ℄ Imp.
SCALE: 1"=5'

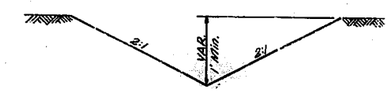

TYPE I

DITCH DETAILS
NO SCALE

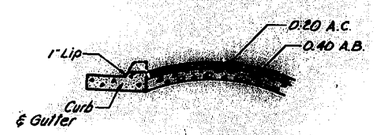

SECTION

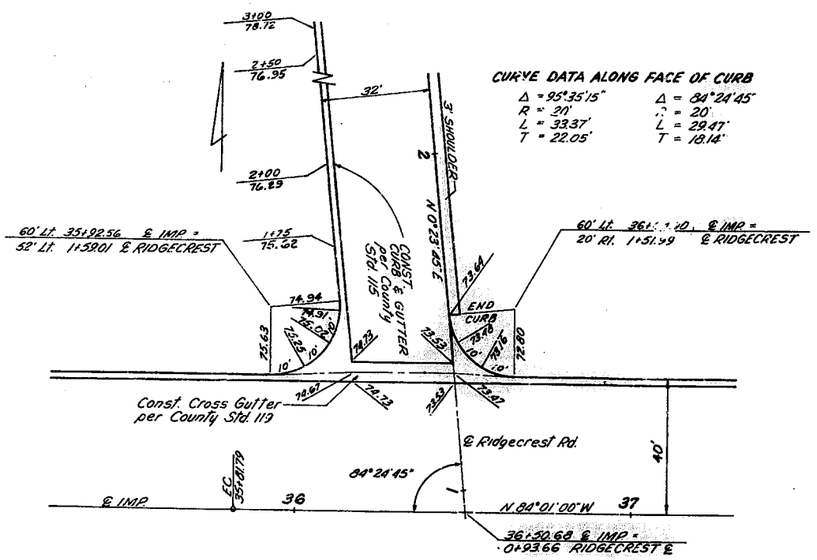

RIDGECREST ROAD INTERSECTION DETAIL
SCALE 1" = 20'

	ACCESS DR. 18+00.20 ℄ IMP.	ACCESS DR. 36+34.68 ℄ IMP.
(A)	2987.74	2974.64
(B)	2987.69	2974.33
(C)	2987.63	2974.00
(D)	2987.59	2973.38
(E)	2987.56	2973.08
(F)	2987.84	2974.38
(G)	2987.87	2973.90

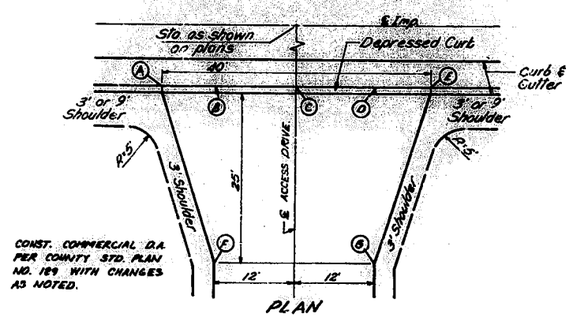

CONST. COMMERCIAL D.A. PER COUNTY STD. PLAN NO. 189 WITH CHANGES AS NOTED.

PLAN

DRIVEWAY APPROACH DETAIL
SCALE: 1" = 10'

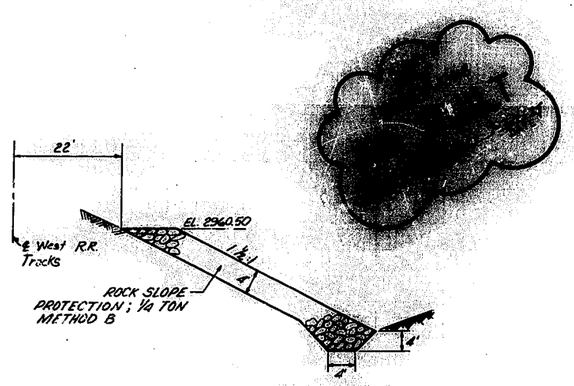

ROCK SLOPE PROTECTION DETAIL
SCALE: 1" = 10'

FILE NO. 173-178 158700 AB

REDUCED PLAN
0 1 2 3
3 INCHES ON ORIGINAL PLAN

LDKING CONSULTING ENGINEERS ONTARIO, CALIFORNIA
RCE NO. 21062 DATE 12-8-77

COUNTY OF SAN BERNARDINO
TRANSPORTATION DEPARTMENT
HESPERIA AREA
BEAR VALLEY CUTOFF
APATITE STREET TO TAMARISK AVENUE
SUMMARY OF DRAINAGE STRUCTURES AND SUMMARY OF QUANTITIES

W.O. NO. H05347 FIELD BOOK REF.
SUBMITTED BY
PROJECT ENGINEER DATE
RECOMMENDED/APPROVED BY
DIRECTOR OF ADMINISTRATION / DATE
COUNTY ROAD COMMISSIONER DATE

173-178
FILE NO. 158700 AB

(F) The Quantity shown in the columns for each individual portion of the work is a Final Pay Quantity

SUMMARY OF DRAINAGE STRUCTURES

STRUCTURE DATA

LOCATION AND DESCRIPTION		INVERT DATA INLET STATION	INLET OFFSET	INLET ELEV.	INVERT DATA OUTLET STATION	OUTLET OFFSET	OUTLET ELEV.	CULVERT LENGTH 24" APC TYPE A LF	36" APC TYPE A LF	42" CSP LF	48" CSP LF	28"x18" CSPA LF	10'x4' RCB LF	PIPE REMOVAL 48"x23"	WINGWALLS TYPE A CONCRETE CY	TYPE A STEEL LB	TYPE B CONCRETE CY	TYPE B STEEL LB	(F) CONCRETE CLASS A CY	(F) REINFORCING STEEL LB	(F) STRUCTURE EXCAVATION CY	(F) STRUCTURE BACKFILL CY	(F) STRUCTURE EXCAVATION	STRUCTURE BACKFILL	(F) MINOR CONCRETE (Minor Structure) CY	(F) MISC. IRON & STEEL LB	MINOR CONCRETE (Misc. Construction) CY	DITCH EXCAVATION CY
14+24 ℄ IMP.	PIPE CULVERT LT.	14+32±	14' LT.±	2984.36	14+65±	67' LT.±	2982.98																					
13+25 ℄ IMP.	INTERMACE ACCESS	13+05±	20' LT.±	2974.18	13+29±	35' RT.±	2972.72				60																	
17+50 ℄ IMP.	TYPE A CATCH BASIN (Sag)	17+50	40' LT.	2987.18							76												44	44				
17+50 ℄ IMP.	PIPE CULVERT LT. & RT.	17+50	40' LT.	2983.18	17+50	40' RT.	2980.98																					
17+50 ℄ IMP.	TYPE A CATCH BASIN (Sag)	17+50	40' RT.	2987.18				82																	3.7	130	.32	
17+50 ℄ IMP.	PIPE CULVERT RT.	17+50	40' RT.	2980.98	17+61±	84' RT.	2980.00	20															51	71				
																									5.5	130	.32	
19+05.5 ℄ IMP.	PIPE CULVERT LT	18+88±	135' RT.±	2976.50±	20+15±	84' LT.±	2973.92			160													9	19				
29+12 ℄ IMP.	BOX CULVERT LT. & RT.	29+20.66	84.56 RT.	2954.50	29+01.00	101.42'	2951.75																104	205				
(V invert)	WINGWALL LT. BK. L=11												187						17.4	49325	103	285						
Max. Earth	WINGWALL LT. AH. L=15														8.0	682			8.0	682	3	5						
Cover = 27'	WINGWALL RT. BK. L=15														11.0	930			11.0	930	2	3						
	WINGWALL RT. AH. L=11																10.0	675	10.0	675	2	3						
																	7.4	539	7.4	539	2	5						
30+12 ℄ IMP.	PIPE CULVERT LT. & RT.	30+24	102 RT.	2952.00	30+00	104' LT.	2956.00																					
						208																						
44+20.5 ℄ IMP.	BOX CULVERT LT. & RT.	43+78.36	52.07 RT.	2936.10	44+68.96	59.84 LT.	2933.50																133	238				293
(V invert)	WINGWALL LT. BK. L=11'												144															
Max. Earth	WINGWALL LT. AH. L=11'																		10.8	27300	4.78	209						
Cover = 10'	WINGWALL RT. BK. L=12'														5.5	275			5.5	275	3	3						
	WINGWALL RT. AH. L=12'														5.5	275			5.5	275	6	4						
																	5.3	266	5.3	266	21	7						
3+00 ℄ W. SANTA FE AVE	PIPE CULVERT LT-RT	3+00	19' RT.	2966.70	3+00	21' LT.	2966.00												5.3	266	21	7						
												40											23	39				
43+82 ℄ IMP.	CURB OPENING LT.																											
44+64 ℄ IMP.	CURB OPENING RT.																											
27+00±	RT.																									.37		
29+30±	RT.																									.37		
44+20±	RT.													70														
														70														
														235														
								102	208	160	60	40	331	410					340	81337	643	536	364	656	32	260	1.38	293

LEGEND

APC	ALTERNATE PIPE CULVERT
ACP	ASBESTOS CEMENT PIPE
CSP	CORRUGATED STEEL PIPE
CSPA	CORRUGATED STEEL PIPE ARCH
RCP	REINFORCED CONCRETE PIPE
RCB	REINFORCED CONCRETE BOX

ALLOWABLE ALTERNATES

TYPE A	ACP, CL. III; CSP, .079; RCP, CL. III

MINOR CONCRETE Misc. Construction

Curb and Gutter	403.00
Gutter Depressions	1.38
Cross Gutter	13.38
Total	417.76 CY

BRIDGE APPROACH GUARDRAIL

	GUARDRAIL	ANCHOR ASSEM.
28+29.11 to 28+79.11 Rt.	50	1
30+38.15 to 30+88.15 Lt.	50	1
Total	100 LF	2 EA.

PLACING ASPHALT CONC. Misc. Areas

0+65 W. Santa Fe	5
43+78 ℄ Imp. Lt.	10
44+69 ℄ Imp. Rt.	10
Total	25 SY

ROCK SLOPE PROTECTION

1/4 Ton Method B (F)

	ROCK		STRUCT. EXCAV.
29+12 Rt. inlet of 10'x4' RCB	219		154
29+12 Lt. outlet of 10'x4' RCB	40		40
44+69 Lt. outlet of 10'x4' RCB	35		35
Total	294 CY		229 CY

EARTHWORK SUMMARY

		EXCAV.	EMB.
℄ Imp.		26937	187819
Santa Fe Ave		147	449
Ridgecrest Rd.		417	0
18+00.2 Access Dr.		1819	1150
36+34.68 Access Dr.		28	2257
Pavement Removal		2761	
Ditch Excav.	293		
Total CY	293	32109	191657

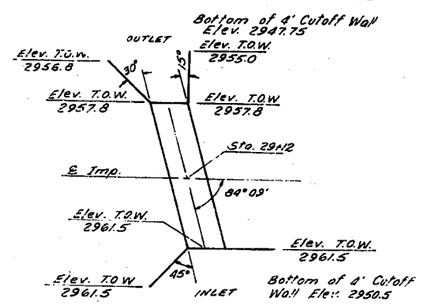

RCB STA. 29+12 ℄ IMP.

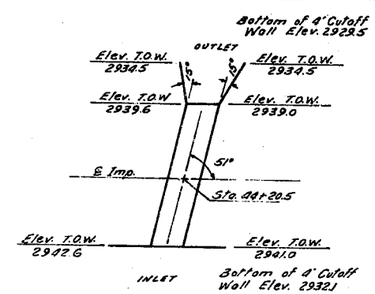

RCB STA. 44+20.5 ℄ IMP.

NOTES

1. ALL CSP AND CSPA SHALL BE BITUMINOUS COATED.
2. CONTRACTOR TO VERIFY LOCATION AND PIPE LENGTHS WITH ENGINEER BEFORE ORDERING PIPE.
3. CONTRACTOR TO VERIFY CULVERT AND WINGWALL ELEVATIONS WITH ENGINEER BEFORE CONSTRUCTION.

CORRECTIONS AS BUILT

REDUCED PLAN
0 1 2 3
3 INCHES ON ORIGINAL PLAN

173-178
FILE NO. 158700 AB

DATE	
APPR.	
REVISIONS	
MARK	

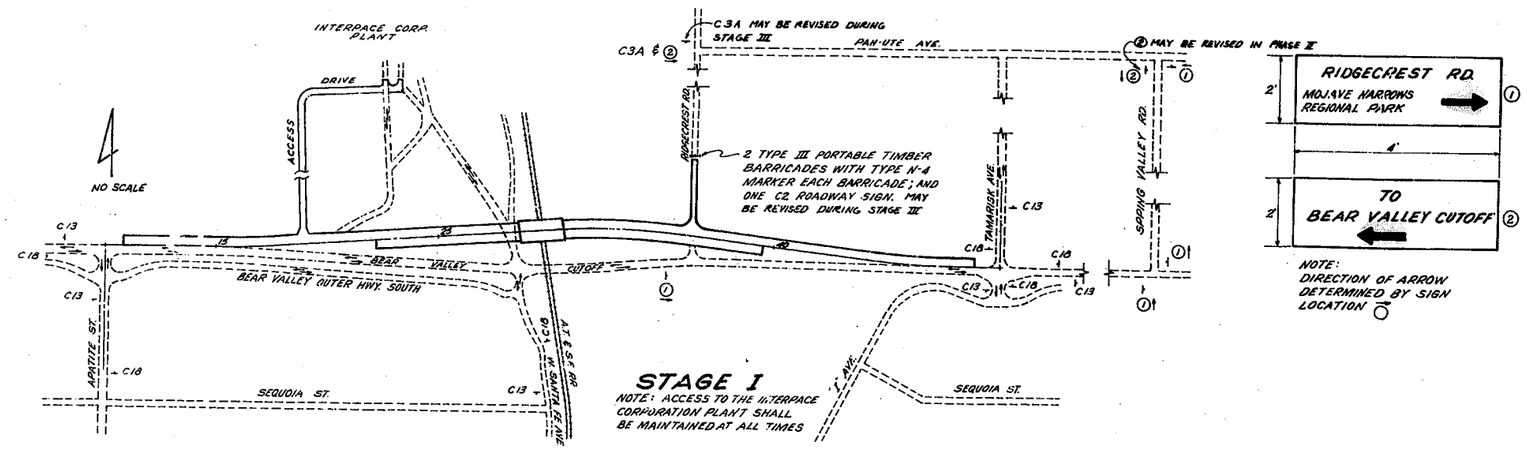

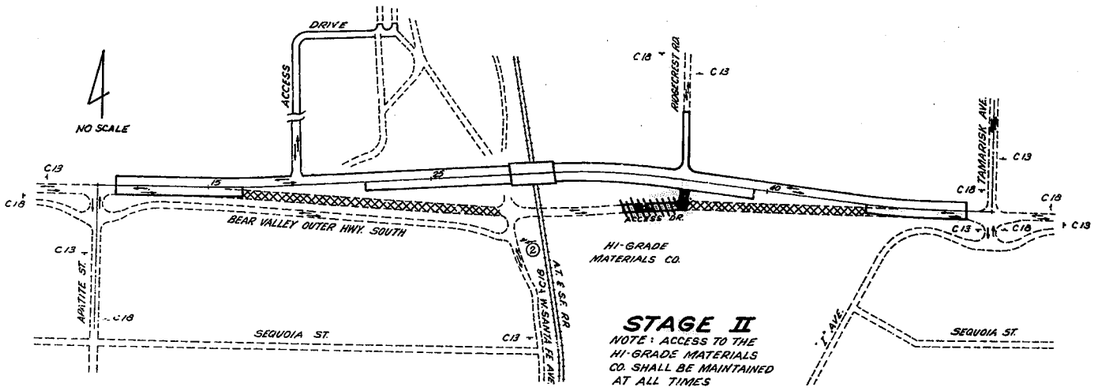

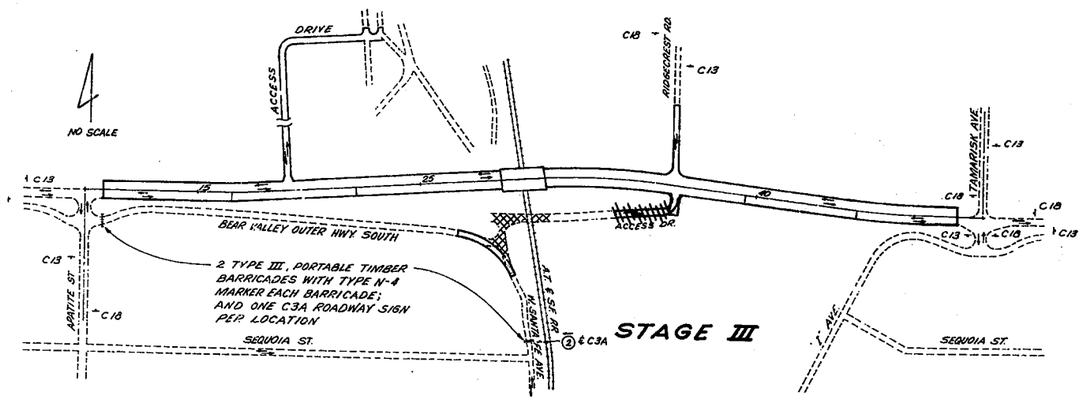

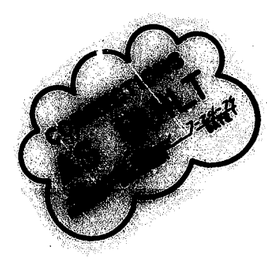

BARRICADE SIGNING	
TYPE	EA.
Type III Portable Timber Barricade	6
N-4 Marker	6
C-2 Sign	1
C-3A Sign	2

GUIDE MARKERS CLASS 2	
TYPE	EA
F	16
K	1

CONSTRUCTION SIGNS	
TYPE	EA
C-3A	1
C-13	7
C-18	7
①	4
②	3

- Construction This Stage
- Traffic Thru Construction
- Remove exist. Pavement & Base
- Prefabricated Sign and Directional Arrow
- Barricade
- Sign
- Traffic Flow Arrow & No. of Lanes

1. Temporary Sign panels, 4'x2', shall be construction grade plywood suitable for the purpose intended. Colors shall be white on green. The direction arrow will vary per sign location.
2. All C-18 signs shall be 48" x 48"
3. Existing signs shall be removed when no longer required for traffic control as determined by the engineer.
4. Undamaged existing signs shall be used for temporary traffic control as determined by the engineer.
5. All signs shall be reflectorized.
6. Sign, Guide Marker, and Barricade locations shall be determined by the engineer.
7. The top course of asphalt concrete on the ℄ of improvement shall not be placed before completion of stage III.

LDKING CONSULTING ENGINEERS ONTARIO, CALIFORNIA
D. H. Mayk
RCE NO. 21062 DATE 12-8-77

COUNTY OF SAN BERNARDINO
TRANSPORTATION DEPARTMENT
HESPERIA AREA
BEAR VALLEY CUTOFF
APATITE STREET TO TAMARISK AVENUE
CONSTRUCTION STAGING DIAGRAM

W.O. NO. HO 5347 | FIELD BOOK REF.
SUBMITTED BY | RECOMMENDED/APPROVED BY
PROJECT ENGINEER DATE | DEPUTY DIRECTOR, ADMINISTRATION DATE
1-25-78
DATE | COUNTY ROAD COMMISSIONER DATE

173-178
FILE NO. 158700 AB

U.S. GEOD. & SURV. APPR. 1967
LA MAYOR APPR. 1967

173-178
FILE NO. 158700 AB

REDUCED PLAN
0 1 2 3
3 INCHES ON ORIGINAL PLAN

To accompany plans dated

DISTRICT	COUNTY	ROUTE	Post Miles - Total Project	SHEET NO.	TOTAL SHEETS
				12	23

CHIEF ENGINEER - PLANNING BRANCH
REGISTERED CIVIL ENGINEER NO. 2013

DATE October 14, 1977

SPAN	4						5							
HEIGHT	2		3		4		2		3		4		5	
Maximum Earth Cover '	10	20	10	20	10	20	10	20	10	20	10	20	10	20
Conc. Roof T_1 "	7	7	7	7	7	7	7½	7½	7½	7½	7½	7½	7½	7½
Conc. Walls T_2 "	6	6	6	6	6	6½	6	6	6	6	6	7	6½	7½
Conc. Invert T_3 "	6	6	6	6	6	6½	6½	7	6½	7	6½	7	6½	7
Reinf. Spacing "	7	7	7	7	7	7	8½	6	8½	5½	8½	5½	8½	5½
Reinf. "a" Size Bar #	6	6	6	6	6	6	7	6	7	6	7	6	7	6
Reinf. "e" Size Bar #	4	4	4	5	5	6	4	4	4	4	5	5	6	6
Quan. Concrete CF/LF	7.4	7.4	8.4	8.4	9.4	10.1	8.9	9.2	10.0	10.2	11.0	12.0	12.5	13.7
Quan. Reinforcement lbs/LF	48	48	50	55	58	67	58	60	58	68	67	81	82	105

SPAN	6								7									
HEIGHT	3		4		5		6		3		4		5		6		7	
Maximum Earth Cover '	10	20	10	20	10	20	10	20	10	20	10	20	10	20	10	20	10	20
Conc. Roof T_1 "	8	8	8	8	8	8	8	8	8	9	8	9	8	9	8½	9	8½	9
Conc. Walls T_2 "	6	6	6	7	6½	7½	7	8½	6	6	6	7	6½	7½	7	8½	8	9½
Conc. Invert T_3 "	7	8	7	8	7	8	7	8	8	9	8	9	8	9	8	9	9	9
Reinf. Spacing "	7½	5	7½	5	7½	5	7½	4½	6½	5	6½	4½	6½	5½	6½	5½	6½	5½
Reinf. "a" Size Bar #	7	6	7	6	7	6	7	6	7	6	7	6	7	7	7	7	7	7
Reinf. "e" Size Bar #	4	4	5	5	6	6	7	8	4	4	5	5	6	6	6	7	7	7
Quan. Concrete CF/LF	11.7	12.3	12.7	14.2	14.2	15.9	15.9	18.3	13.7	14.9	14.6	16.8	16.1	16.5	18.1	21.0	20.7	[illegible]
Quan. Reinforcement lbs/LF	70	81	82	96	97	120	124	148	94	94	105	118	121	147	130	177	160	192

SPAN	8									
HEIGHT	4		5		6		7		8	
Maximum Earth Cover '	10	20	10	20	10	20	10	20	10	20
Conc. Roof T_1 "	[illegible]	[illegible]	[illegible]	[illegible]	[illegible]	[illegible]	[illegible]	[illegible]	[illegible]	10
Conc. Walls T_2 "	6	7	[illegible]	7½	7	[illegible]	8	[illegible]	[illegible]	[illegible]
Conc. Invert T_3 "	8	[illegible]	8	10	8	10	8	10	8	10
Reinf. Spacing "	6	6	6	5	6	[illegible]	6	5	6	[illegible]
Reinf. "a" Size Bar #	7	7	7	7	7	7	7	7	7	7
Reinf. "e" Size Bar #	5	5	5	6	6	6	6	7	7	7
Quan. Concrete CF/LF	[illegible]	19.6	17.9	21.1	19.5	24.1	22.1	[illegible]	24.1	30.1
Quan. Reinforcement lbs/LF	123	151	131	171	137	[illegible]	160	215	192	252

"d" bars for earth covers of 2' and less								
Span	4'	5'	6'	7'	8'	10'	12'	14'
Number	5	6	7	8	9	10	12	16

SPAN	10											
HEIGHT	5		6		7		8		9		10	
Maximum Earth Cover '	10	20	10	20	10	20	10	20	10	20	10	20
Conc. Roof T_1 "	8	10½	8	10½	8	10½	8	10½	8	10½	8½	11
Conc. Walls T_2 "	8	8	8	9	8	9	8	10	8½	11½	8½	12½
Conc. Invert T_3 "	8	11	8	11	8	11	8	11	8	11	8½	11
Reinforcement Spacing "	13	12	12	12	11	11	10	11	11	10	11	10
"a" Size Bar #	6	7	6	7	6	7	6	7	6	6	6	6
"b" Size Bar #	6	7	6	7	6	7	6	7	6	6	7	7
"b" Dimension "B" ' "	2-11	2-11	2-11	3-0	2-11	3-9	2-11	3-9	2-11	3-9	2-11	3-9
"b" Dimension "Bw" ' "	4-10	5-0	4-10	5-0	4-10	5-0	4-10	5-0	4-10	5-0	4-7	4-7
"c" Size Bar #	6	7	6	7	6	7	6	7	7	7	7	7
"c" Dimension "C" ' "	3-4	3-4	7-4	4-8	7-7	4-9	8-2	4-8	7-7	4-8	7-7	4-8
"e" Size Bar #	4	4	4	4	4	4	4	4	4	4	5	5
Quan. Concrete CF/LF	21.6	26.8	23.0	29.5	24.3	31.0	25.6	34.1	27.8	37.7	32.1	42.3
Quan. Reinforcement lbs/LF	191	267	233	285	260	325	300	339	314	327	360	373

SPAN	12													
HEIGHT	6		7		8		9		10		11		12	
Maximum Earth Cover '	10	20	10	20	10	20	10	20	10	20	10	20	10	20
Conc. Roof T_1 "	8½	12	8½	12	8½	12	8½	12	8½	12	8½	12	8½	12
Conc. Walls T_2 "	8	10	8½	10½	8½	10½	8½	11½	9	12½	[illegible]	[illegible]	[illegible]	15
Conc. Invert T_3 "	8½	12½	9	12½	9	12½	9	12½	9	12½	9½	13	10	[illegible]
Reinforcement Spacing "	9	10	9	10	9	10	8	10	8	10	10	9	9	8
"a" Size Bar #	6	7	6	7	6	7	6	7	6	7	6	6	6	6
"b" Size Bar #	6	7	6	7	6	7	6	7	6	7	7	7	6	7
"b" Dimension "B" ' "	3-1	3-2	3-9	3-9	3-9	3-9	3-7	3-9	3-7	4-4	3-7	4-4	4-4	4-4
"b" Dimension "Bw" ' "	6-0	5-10	6-2	6-7	6-2	6-7	4-11	4-11	4-11	4-11	4-11	4-11	4-4	4-4
"c" Size Bar #	6	7	6	7	6	7	6	7	6	7	7	7	7	7
"c" Dimension "C" ' "	4-4	3-7	8-1	5-7	8-1	5-7	8-1	5-7	8-1	5-7	8-1	5-7	8-1	5-7
"e" Size Bar #	4	4	4	4	4	4	4	4	4	4	[illegible]	[illegible]	[illegible]	[illegible]
Quan. Concrete CF/LF	26.8	37.7	29.3	40.1	[illegible]	41.9	[illegible]	[illegible]	[illegible]	[illegible]	[illegible]	[illegible]	[illegible]	[illegible]
Quan. Reinforcement lbs/LF	295	362	353	409	365	420	402	413	416	424	440	471	[illegible]	[illegible]

SPAN	14															
HEIGHT	7		8		9		10		11		12		13		14	
Maximum Earth Cover '	10	20	10	20	10	20	10	20	10	20	10	20	10	20	10	20
Conc. Roof T_1 "	[illegible]	14	[illegible]	14	[illegible]	14	[illegible]	14	10	14	10	14	[illegible]	14	11	14
Conc. Walls T_2 "	[illegible]	11	[illegible]	[illegible]	[illegible]	[illegible]	[illegible]	[illegible]	[illegible]	14	[illegible]	16	[illegible]	[illegible]	[illegible]	7½
Conc. Invert T_3 "	[illegible]	[illegible]	10	[illegible]	10	[illegible]	10	[illegible]	[illegible]	14½	[illegible]	15	11	15	11½	15
Reinforcement Spacing "	10	9	10	[illegible]	10	[illegible]	10	[illegible]	10	[illegible]	[illegible]	10	10	10	10	9
"a" Size Bar #	7	7	7	7	7	7	7	7	7	7	6	7	6	7	6	7
"b" Size Bar #	[illegible]	7	7	7	7	7	7	7	7	7	[illegible]	[illegible]	7	8	7	8
"b" Dimension "B" ' "	[illegible]	4-2	3-4	4-4	3-4	4-6	[illegible]	[illegible]	3-6	4-6	[illegible]	4-6	3-6	4-6	4-9	6-0
"b" Dimension "Bw" ' "	[illegible]	7-0	7-0	8-4	7-0	8-4	[illegible]	[illegible]	[illegible]	[illegible]	6-0	6-0	[illegible]	6-0	4-6	6-0
"c" Size Bar #	7	7	7	7	7	7	7	7	7	7	7	8	8	8	8	8
"c" Dimension "C" ' "	4-0	4-2	[illegible]	[illegible]	[illegible]	[illegible]	[illegible]	[illegible]	[illegible]	[illegible]	8-11	6-4	8-11	6-4	8-1	6-4
"e" Size Bar #	4	4	4	4	[illegible]	[illegible]	[illegible]	[illegible]	[illegible]	[illegible]	[illegible]	[illegible]	[illegible]	[illegible]	6	6
Quan. Concrete CF/LF	[illegible]	[illegible]	[illegible]	[illegible]	[illegible]	[illegible]	[illegible]	[illegible]	[illegible]	[illegible]	[illegible]	[illegible]	[illegible]	[illegible]	[illegible]	81.3
Quan. Reinforcement lbs/LF	374	471	[illegible]	[illegible]	[illegible]	[illegible]	[illegible]	[illegible]	[illegible]	[illegible]	[illegible]	[illegible]	[illegible]	[illegible]	604	789

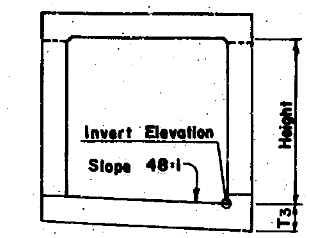

SLOPED INVERT

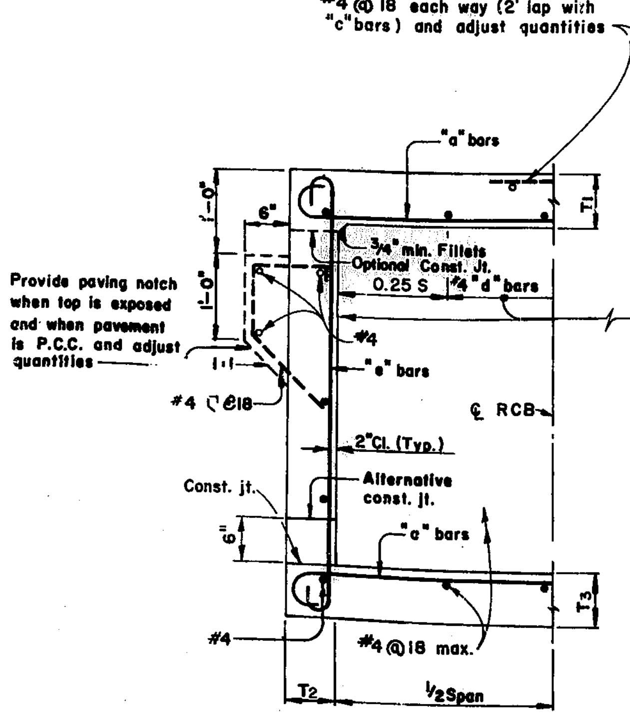

TYPICAL SECTION-SPANS 4' THRU 8'

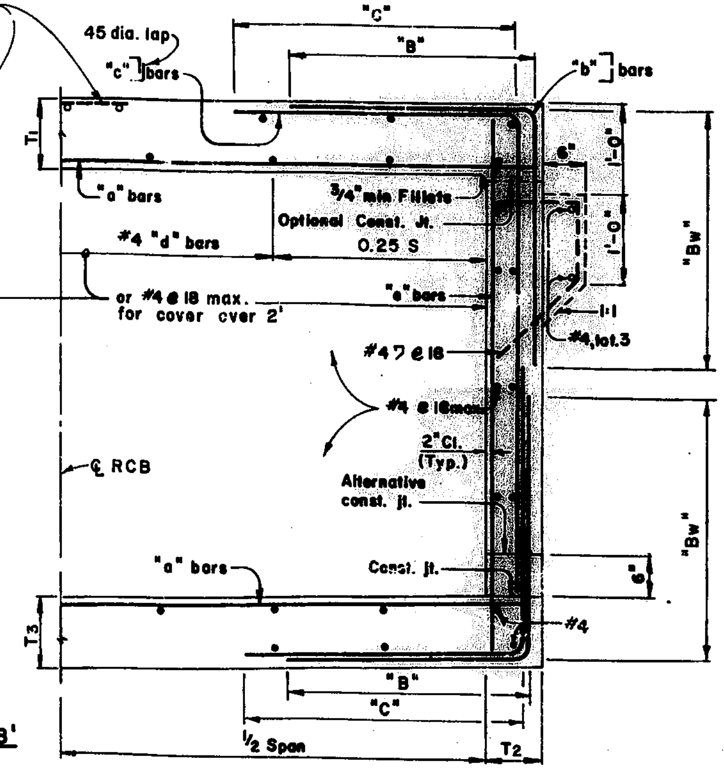

TYPICAL SECTION-SPANS 10' THRU 14'

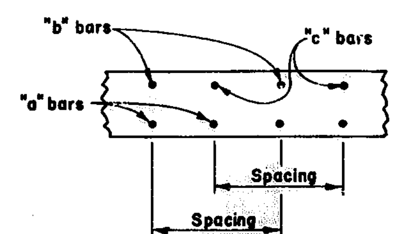

ROOF SECTION
SPANS 10' THRU 14'
Invert similar

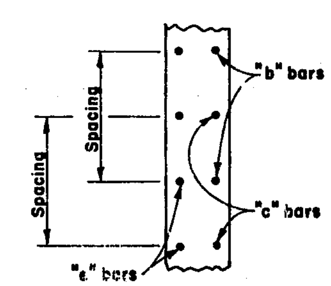

WALL SECTION
SPANS 10' THRU 14'

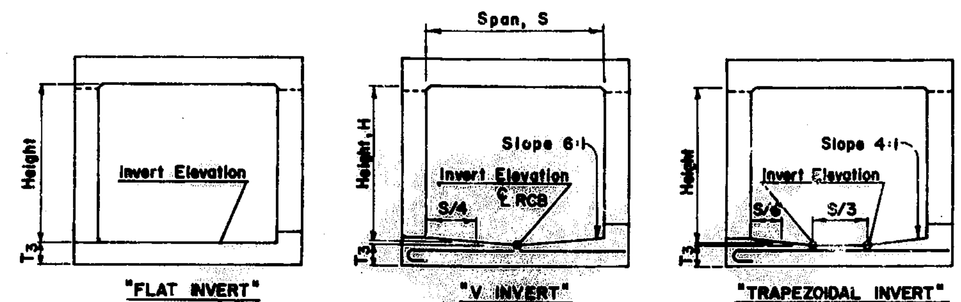

ALTERNATIVE INVERTS

GENERAL NOTES

For boxes with Span or Height less than any of those shown in table, use next greater size box concrete dimensions and reinforcement. Make necessary changes in bar lengths and quantities.

Quantities are approximate and for design purposes only.

For boxes with Span or Height or cover greater than those shown in tables, a special design is required.

NO CORRECTIONS
AS BUILT
RESIDENT ENGINEER 7-24-79 DATE

FILE NO. 158700AB
173-178

SPECIAL DETAILS
SINGLE BOX CULVERT

ND80

FILE NO. 158700AB
173-178

REDUCED PLAN
0 1 2 3
3 INCHES ON ORIGINAL PLAN

DATE October 14, 1977

To accompany plans dated

DISTRICT	COUNTY	ROUTE	Post Miles-Total Project	SHEET NO.	TOTAL SHEETS
				13	23

CHIEF ENGINEER-PLANNING BRANCH
REGISTERED CIVIL ENGINEER NO. 9013

SPECIFICATIONS:
A.A.S.H.T.O. DATED 1973 WITH INTERIM REVISIONS AND AS SUPPLEMENTED BY BRIDGE PLANNING AND DESIGN MANUAL.

SECTIONS ARE DESIGNED FOR CULVERTS WHERE FOUNDATIONS WILL SUPPORT THE SOIL PRESSURES SHOWN FOR FILL HEIGHTS, TO 20' MAXIMUM.

EARTH COVER IS ASSUMED TO BE UNIFORM.
FOR VARIABLE TRANSVERSE COVER HEIGHTS, A SPECIAL DESIGN IS REQUIRED.

LOAD FACTORS: $1.5\,D + 1.5\,E + 2.5\,(L+I)$
WHERE D = DEAD LOAD
E = EARTH LOAD
L = LIVE LOAD
I = IMPACT
CAPACITY REDUCTION FACTOR = 1.0

LOADING:
LIVE LOAD:
HS20
ROOF: 30% IMPACT UP TO 3' COVER, NO IMPACT ABOVE 3' COVER
WALLS: NO SURCHARGE
INVERT: NO IMPACT

UP TO 2' COVER
WHEEL LOAD DISTRIBUTION ON THE ROOF IS $E = 4' + .06S$ LONGITUDINALLY AND IS CONCENTRATED TRANSVERSELY. WHEEL LOAD DISTRIBUTION ON THE INVERT IS 7' LONGITUDINALLY AND UNIFORM OVER THE WIDTH OF THE CULVERT. TRAFFIC IS ANALYSED PARALLEL TO THE MAIN (TRANSVERSE) REINFORCEMENT.

OVER 2' COVER
WHEEL LOADS DISTRIBUTED UNIFORMLY OVER A SQUARE, THE SIDES OF WHICH ARE 1.75 TIMES THE DEPTH OF COVER, BUT NOT LESS LONGITUDINALLY THAN E ON THE ROOF, OR 7' ON THE INVERT AND UNIFORMLY OVER THE WIDTH OF THE INVERT. WHEN SUCH AREAS FROM SEVERAL WHEEL CONCENTRATIONS OVERLAP, THE TOTAL LOAD SHALL BE CONSIDERED AS UNIFORMLY DISTRIBUTED OVER THE AREA DEFINED BY THE OUTSIDE LIMITS OF THE INDIVIDUAL AREAS, BUT THE OVERALL LONGITUDINAL DIMENSION SHALL NOT EXCEED THE TOTAL LENGTH OF THE SUPPORTING SLAB. NEGLECT LIVE LOAD WHEN COVER IS GREATER THAN 8' AND EXCEEDS DISTANCE BETWEEN EXTERIOR WALLS.

EARTH LOAD:
EARTH PRESSURES FOR TWO CONDITIONS:
140 LBS/CU.FT. VERTICAL, 42 LBS/CU.FT. HORIZONTAL
140 LBS/CU.FT. VERTICAL, 140 LBS/CU.FT. HORIZONTAL

THE HORIZONTAL EARTH PRESSURE SHALL NOT BE DIMINISHED (FOR SLAB POSITIVE MOMENT, UP TO 3' COVER).

UNIT STRESSES:
$f'c = 3\frac{1}{4}$ KSI
$fy = 60$ KSI
$n = 9$

DISTRIBUTION "d" BARS:
UP TO 2' COVER
EXPRESSED AS A PERCENT OF MAIN POSITIVE REINFORCEMENT REQUIRED: $\frac{100}{\sqrt{S}}$, MAX. 50% (UNLESS TRAFFIC LONGITUDINAL).

OVER 2' COVER
#4 @ 18" MAXIMUM

SHEAR: MAXIMUM ALLOWABLE SHEAR, $v_c = 3.5\sqrt{f'_c}$
MAXIMUM SHEAR IS TAKEN AT A DISTANCE d FROM THE SUPPORTING MEMBER.

EXCLUSIONS:
COMPRESSIVE REINFORCEMENT AND NEGATIVE-MOMENT REDUCTION (FOR CONTINUITY) DO NOT APPLY. AXIAL LOADING ON MEMBERS HAS NOT BEEN CONSIDERED.

DESIGNATION:
STANDARD SINGLE OR MULTIPLE BOX CULVERTS ARE SHOWN ON PLANS AS SPAN TIMES HEIGHT WITH MAXIMUM COVER OVER ROOF THUS: 8 x 5 RCB WITH 10' OR DBL 10 x 5 RCB WITH 20', FOLLOWED BY ALTERNATIVES.

ALTERNATIVES:
SINGLE CELL: INVERT WILL BE SLOPED UNLESS "TRAPEZOIDAL INVERT", "FLAT INVERT" OR "V INVERT" IS INCLUDED IN DESIGNATION.
MULTIPLE CELL: INVERT WILL BE VEE UNLESS "FLAT INVERT" IS SPECIFIED.

ENDS OF CULVERT WILL BE ROUNDED UNLESS "SQUARE ENDS" ARE DESIGNATED.

PARAPETS WILL BE AS SHOWN UNLESS DESIGNATED IN PLANS. SUCH DESIGNATIONS MAY BE DIFFERENT FOR INLET AND OUTLET ENDS.

QUANTITIES:
QUANTITIES ARE FOR THE SLOPED OR VEE INVERT AND DO NOT INCLUDE "d" BARS, NOR SPLICES IN LONGITUDINAL BARS, NOR TEMPERATURE REINFORCEMENT FOR EXPOSED ROOF, NOR CONCRETE OR REINFORCEMENT FOR PARAPETS, CUTOFF WALLS OR PAVING NOTCHES.

REINFORCEMENT PLACEMENT:
MAIN REINFORCEMENT IS TO BE PLACED TRANSVERSE OR, FOR CURVED CULVERTS, RADIAL. WHEN RADIAL, REINFORCING SPACING IS MEASURED ALONG THE ℄.

SPECIAL REINFORCEMENT COVERAGE:
BOX STANDARD PLANS ARE NOT TO BE USED FOR CULVERTS IN A CORROSIVE ENVIRONMENT OR WHERE THERE IS A SEVERE ABRASIVE FLOW CONDITION.

SPECIAL DESIGN:
REQUIRED FOR CULVERTS WITH CONDITIONS, LOADS OR SIZES GREATER THAN THOSE GIVEN ON THIS PLAN OR THE STANDARD TABLES. ALSO REQUIRED FOR MULTIPLE CELL CULVERTS WITH UNEQUAL SPANS. FOR CULVERTS WITH RAILROAD LOADING, SEE THE CURRENT A.R.E.A. DESIGN SPECIFICATION.

3 OR MORE CELLS:
FOR CULVERTS WITH MORE THAN TWO CELLS, USE DIMENSIONS AND REINFORCEMENT FOR THE STANDARD "DOUBLE BOX CULVERT" AND ADJUST QUANTITIES ACCORDINGLY.

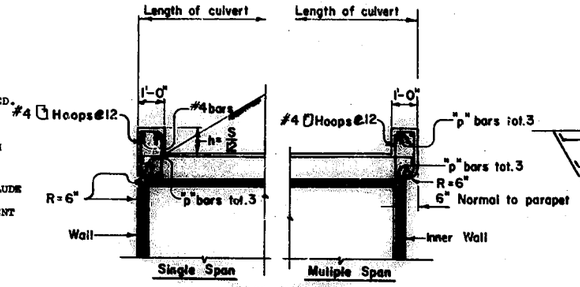

PART SECTION
S=Clear Span

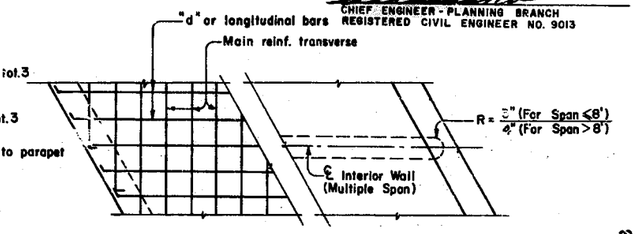

PART PLAN-SKEWED

Parapet "P" Bars			
Skew Angle / Span	0° TO 15°	16° TO 30°	31° TO 45°
4'	#4	#4	#4
6'	#4	#4	#5
8'	#4	#5	#6
10'	#5	#6	#7
12'	#6	#7	#8
14'	#7	#8	#9

PARAPET REINFORCEMENT

PARAPET DETAIL

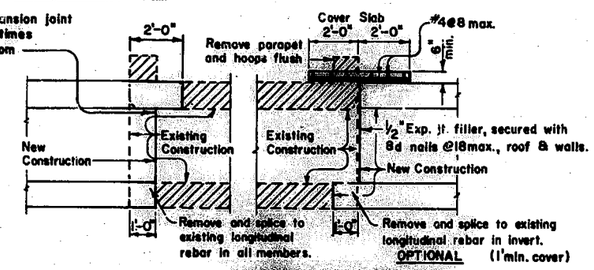

CULVERT EXTENSION
20° Skew Maximum

Height \ Cover	10'	20'
6'	1.0	1.6
8'	1.1	1.7
10'	1.2	1.8
12'	1.3	1.9
14'	1.4	2.0

DESIGN BEARING PRESSURE (TSF)

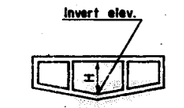

TYPICAL 3 CELL

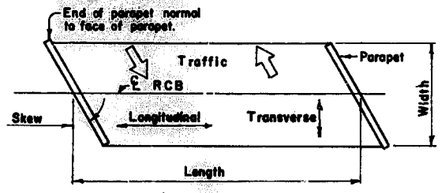

RCB TERMINOLOGY

CONSTRUCTION NOTES

CONSTRUCTION LOADS:
STRUTTING REQUIRED AS SHOWN ON STANDARD PLAN "CONSTRUCTION LOADS ON CULVERTS."

EXPANSION JOINTS:
INVERT:
NO EXPANSION JOINTS SHALL BE PERMITTED.
ROOF AND WALLS:
WHEN COVER IS LESS THAN SPAN LENGTH-
PLACE 1/2" EXPANSION JOINT FILLER AT 30'± CENTERS OUTSIDE THE PAVED ROADWAY LANES AND PLACE STANDARD BRIDGE DETAIL 3-2 AT 30' CENTERS UNDER PAVED ROADWAY LANES.
WHEN COVER IS MORE THAN SPAN LENGTH-
PLACE 1/2" EXPANSION JOINT FILLER AT 30'± CENTERS AND ADDITIONAL 1/2" EXPANSION JOINTS AT LOCATIONS OF CHANGE IN FOUNDATION CHARACTER, AS DIRECTED BY THE ENGINEER.

CONSTRUCTION JOINTS:
TEMPORARY JOINTS MAY BE PERMITTED IF NORMAL (OR RADIAL) TO ℄ OF RCB. OTHERWISE, THE CONTRACTOR IS TO SUBMIT A PROPOSAL FOR CONSIDERATION.

CUTOFF WALLS:
4' CUTOFF WALLS ARE TO BE PROVIDED AT INLET AND/OR OUTLET UNLESS ADJACENT CHANNEL IS LINED AND UNLESS OTHERWISE SHOWN. THESE WALLS ARE TO BE EXTENDED IF SCOUR CONDITIONS WARRANT.

EARTHWORK:
SEE STANDARD PLAN "CONSTRUCTION DETAILS, CONCRETE AND ASBESTOS CEMENT CULVERT".

BACKFILL:
SEE STANDARD SPECIFICATIONS, EXCEPT THAT THE DIFFERENCE IN LEVEL OF BACKFILL (AGAINST OUTSIDE WALLS) SHALL NOT EXCEED 2'.

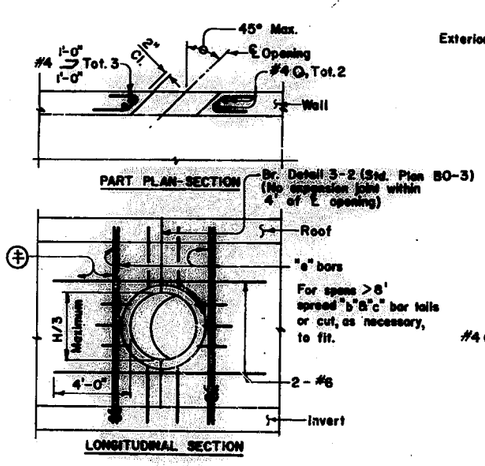

UTILITY OPENING-WALL
H = Height

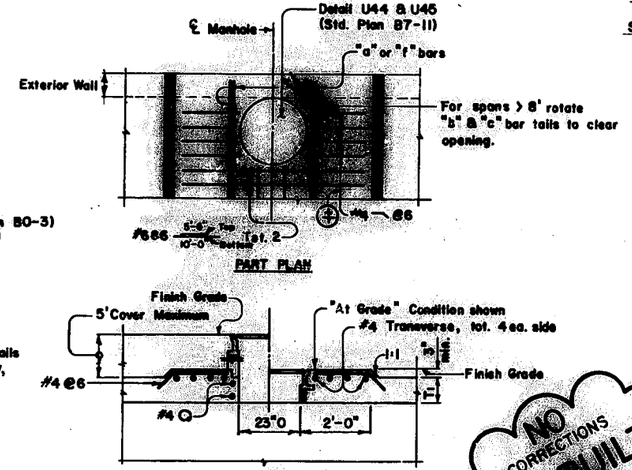

MANHOLE

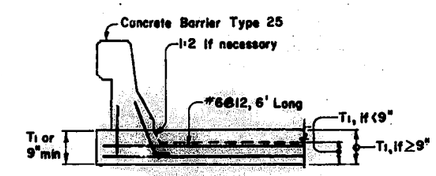

BARRIER SECTION (30' MINIMUM)

⊕ Adjacent to the opening, place additional bars equivalent to the interrupted reinforcement.

NO CORRECTIONS
AS BUILT
RESIDENT ENGINEER 2-24-78 DATE

SPECIAL DETAILS
BOX CULVERT
MISCELLANEOUS DETAILS

ND83

REDUCED PLAN
0 1 2 3
3 INCHES ON ORIGINAL PLAN

FILE NO. 158700 AB 173-178

FILE NO. 158700 AB 173-178

DE LEUW, CATHER & COMPANY
CONSULTING ENGINEERS
SAN FRANCISCO, CALIFORNIA

Aug. 77

COUNTY OF SAN BERNARDINO
TRANSPORTATION DEPARTMENT
HESPERIA AREA
BEAR VALLEY CUTOFF
APATITE STREET TO TAMARISK AVENUE
GENERAL PLAN & ELEVATION

W.O. NO. H 05-047 | FIELD BOOK REF.
SUBMITTED BY | RECOMMENDED/APPROVED BY
PROJECT ENGINEER DATE | ADMINISTRATION DATE
DATE | COUNTY ROAD COMMISSIONER DATE

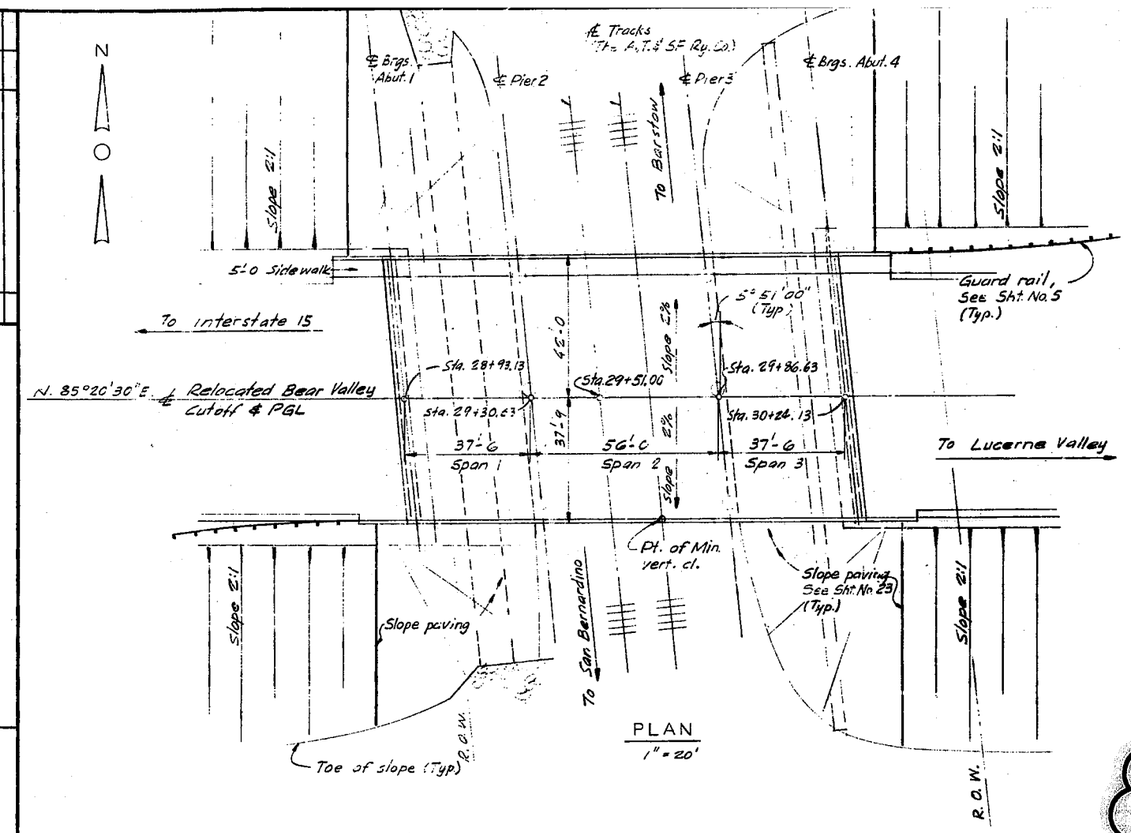

PLAN
1" = 20'

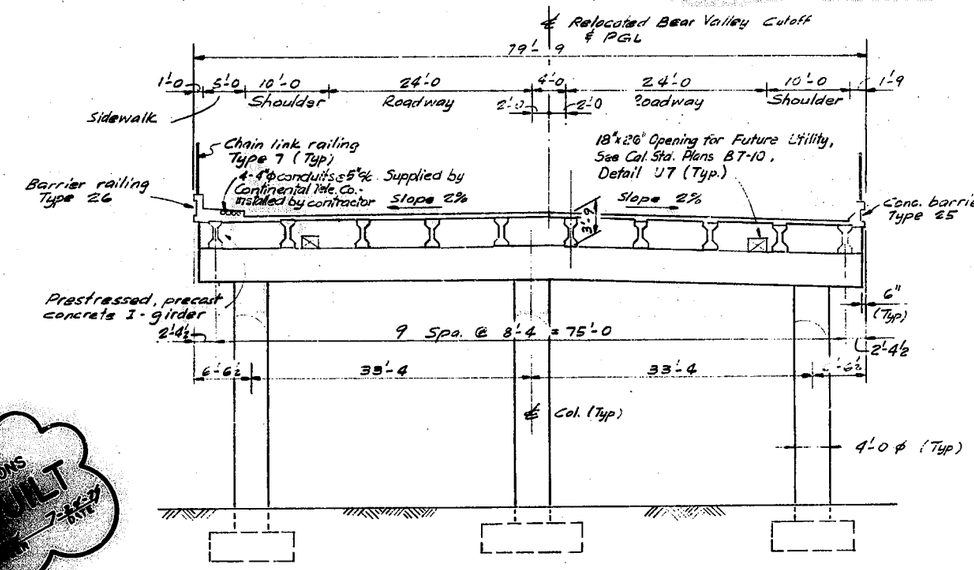

TYPICAL CROSS SECTION
⅛" = 1'-0

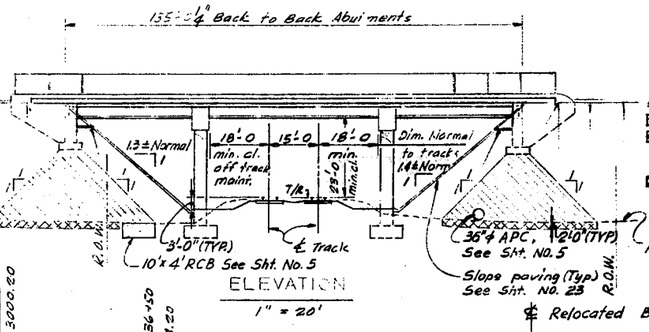

ELEVATION
1" = 20'

Note:
- 95% Compaction. For material see special provisions.
- Material removed will be paid for as roadway excavation.

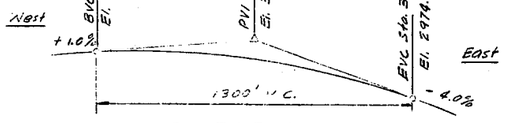

PROFILE GRADE
BEAR VALLEY CUTOFF
No Scale

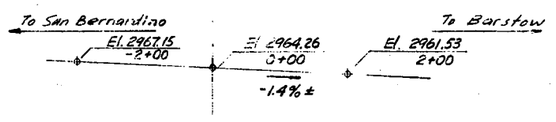

A.T. & S.F. RY. EAST TRACK ELEVATIONS
No Scale

NO CONNECTIONS
AS BUILT
7-28-77
DATE

GENERAL NOTES

DESIGN SPECIFICATIONS: American Association of State Highway and Transportation Officials Standard Specifications for Highway Bridges, 11th Edition, dated 1973, and Interim Specifications for Bridges, dated through 1977, State of California Division of Highways Bridge Planning & Design Manual.

CONSTRUCTION SPECIFICATIONS: Standard Specifications, State of California, Department of Transportation, dated January 1975, and the Special Provisions.

STANDARD PLANS: Plans supplemented by Standard Plans, State of California, Department of Transportation, dated March 1977.

DESIGN LOADING:

Deadload: Includes 35 psf allowance for future wearing surface.
Liveload: AASHTO HS20-44
P-13 shown below: ——— (Load Factor Design only).

Load Factor Design used for superstructure and pier columns (with governing live load).

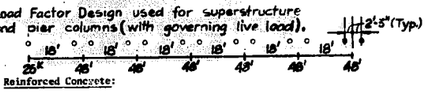

CONCRETE: Reinforced Concrete:

f'_c = 3250 psi ultimate compressive strength at 28 days
f_c = 1500 psi
n = 10

Prestressed Concrete:

See Notes on Sheet 2.

PRESTRESSING STEEL: See Specifications

REINFORCEMENT: All reinforcing bars shall be ASTM A615 deformed billet steel, Grade 60, f_y min = 60,000 psi.
f_s = 20,000 psi (transverse deck slab reinforcement and stirrups)
f_s = 24,000 (all other reinforcing steel)

Bars to be bent according to the ACI Manual of Standard Practice. Dimensions to center of bars unless otherwise shown. Minimum coverage to reinforcing bars 2 inches unless otherwise shown on drawings.

Minimum lapped splice lengths shall be as follows:

Size of Bar	Length of Splice
No. 8 and smaller	45 bar diameters
No. 9, 10 and 11	60 bar diameters

Size of Bundle	Length of Splice
2 bar bundle	1.2 times the length of single bar splice
3 bar bundle	1.33 times the length of single bar splice

CONSTRUCTION JOINTS: No construction joints shall be used except by permission of the Engineer or as shown on the Plans.

FOUNDATIONS:

Piers - Spread Footing, allowable load 3.5 tons per square foot.
Abutments - Spread Footing, allowable load 3.5 tons per square foot.

DATUM: See Civil Drawing Sheet 5.

FOR QUANTITIES AND LIST OF STANDARD PLANS, SEE SHT. No. 23

REDUCED PLAN
0 1 2 3
3 INCHES ON ORIGINAL PLAN

MARK	REVISIONS	APPR.	DATE

DESIGNED BY H. Chin | CHECKED BY R. Lee | DRAWN BY R. Petersen

173-178
FILE NO. 158700 AB

173-178
FILE NO. 158700 AB

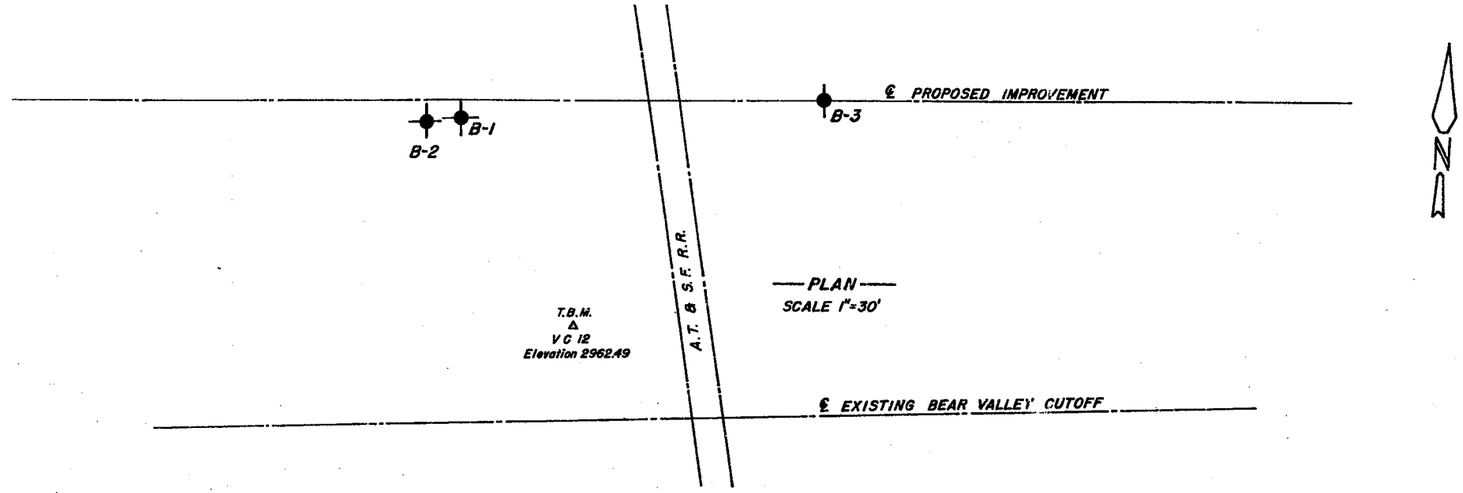

—PLAN—
SCALE 1"=30'

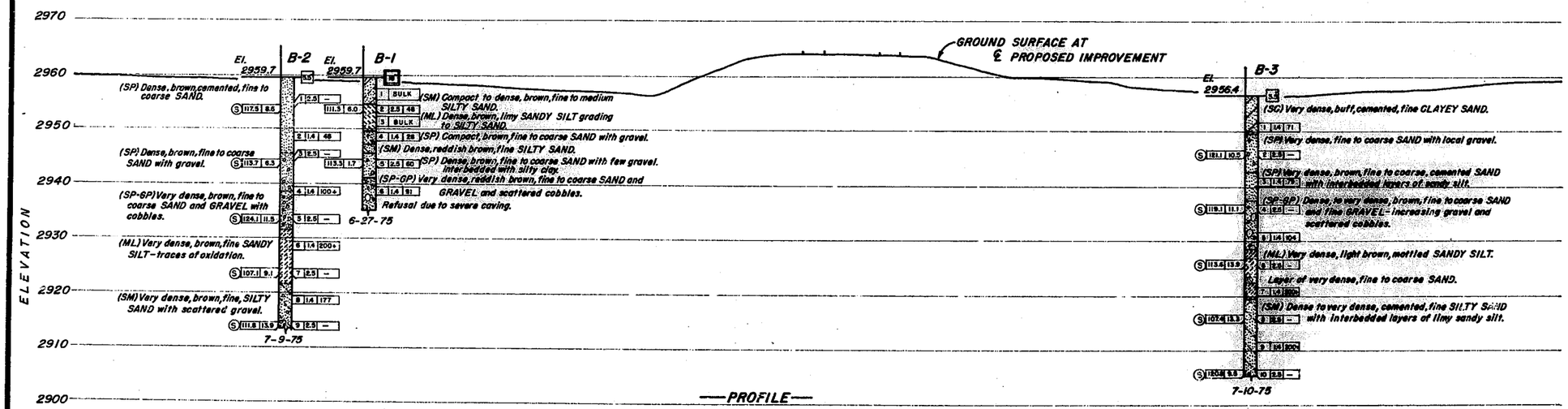

—PROFILE—
SCALE Horiz. & Vert. 1"=10'

NO CORRECTIONS
AS BUILT
RESIDENT ENGINEER
7-24-75
DATE

LEGEND OF EARTH MATERIALS

UNIFIED SOIL CLASSIFICATION

Pt	OH	CH	MH	OL	CL	ML	SC	SW	SP	SM	GC	GM	GP	GW
Highly organic soils	Silts and clays Liquid limit greater than 50		Silts and clays Liquid limit less than 50				Sands with fines >12% fines		Clean sands <5% fines		Gravels with fines >12% fines		Clean gravels <5% fines	

Fine grained soils (More than 50% is smaller than No 200 sieve)

Sands: more than 50% of coarse fraction is smaller than No 4 sieve. Gravels: more than 50% of coarse fraction is larger than No 4 sieve.

Coarse grained soils (More than 50% is larger than No 200 sieve)

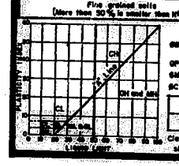

LABORATORY CLASSIFICATION CRITERIA

GW and SW- $C_u = \frac{D_{60}}{D_{10}}$ greater than 4 for GW, 6 for SW; $C_c = \frac{(D_{30})^2}{D_{10} \times D_{60}}$ between 1 & 3.

GP and SP- Clean gravel or sand not meeting requirements for GW and SW.

GM and SM- Atterberg limits below "A" line or P.I. less than 4.

GC and SC- Atterberg limits above "A" line with P.I. greater than 7.

Fines (silt or clay)	Fine sand	Medium sand	Coarse sand	Fine gravel	Coarse gravel	Cobbles	Boulders
Sieve sizes	#200	#40	#10	#4	3/4"	3"	12"

Classification of earth materials shown on this sheet is based on field inspection and should not be construed to imply laboratory analysis, unless so stated.

MATERIAL SYMBOLS

Gravel; Sand; Silt; Clay; Sandy clay or clayey sand; Sandy silt or silty sand; Silty clay or clayey silt; Peat or organic matter; Fill material; Shale; Sandstone; Limestone; Metamorphic rock; Igneous rock

CONSISTENCY CLASSIFICATION FOR SOILS

According to the Standard Penetration Test

Nº of blows	Granular	Cohesive
0-5	Very loose	Very soft
6-10	Loose	Soft
11-20	Semicompact	Stiff
21-35	Compact	Very stiff
36-70	Dense	Hard
>70	Very dense	Very hard

LEGEND OF BORING OPERATIONS

Plan of any boring
Rotary boring
Diamond core boring
Auger boring
Sample boring
Jet boring
Test pit
2½" Cone penetrometer
2½" Cone penetrometer

ROTARY BORING

Location B-No.
Top hole elev.
Depth of hole
Moisture (% dry wt.)
Dry density (lbs./cu.ft.)
Unconfined compressive strength (tons/sq.ft.)
Designates other soils tests
C - Consolidation
S - Direct shear
E - Expansion
T - Triaxial compression
Sample number
Size of sample (inches)
Blows per foot (Using a 140 lb. hammer with a 30" drop)
Elevation
Date
Conformable material change
Approximate material change
Unconformable material change
Date boring started

PENETRATION TEST

Location B-No.
Top hole elev.
Pushed
Blows per foot (Using 140 lb. hammer with 30" drop)
Graphic representation of driving resist.
Date
20
40
Blows per foot

MOORE & TAYLOR - Engineers - Geologists

APPROVED R. J. Moore 7-30-75
REGISTERED CIVIL ENGINEER No. 6589

JOB No. 175-577

L.D. KING ENGINEERING CO.

BEAR VALLEY CUTOFF AT A.T.&S.F. R.R.
SAN BERNARDINO COUNTY, CALIFORNIA

LOG OF TEST BORINGS

Scale As Shown | Date | Sheet 15 of 23

REDUCED PLAN
0 1 2 3
3 INCHES ON ORIGINAL PLAN

173-178
FILE NO. 158700 AB

173-178
FILE NO. 158700 AB

DATE	APPR.	REVISIONS	MARK

COUNTY OF SAN BERNARDINO
COMPTON, CHRISTE & CORTRIGHT
CONSULTING ENGINEERS
SAN FRANCISCO, CALIFORNIA

Aug. 77

REGISTERED PROFESSIONAL ENGINEER HARRY CHIN No. 20022 CIVIL STATE OF CALIFORNIA

TRANSPORTATION DEPARTMENT

HESPERIA AREA

BEAR VALLEY CUTOFF

APATITE STREET TO TAMARISK AVENUE

FOUNDATION PLAN AND MISCELLANEOUS DETAILS

W.O. NO. H05347 | FIELD BOOK REF.

SUBMITTED BY — PROJECT ENGINEER — DATE

RECOMMENDED/APPROVED BY — ROAD SUPT. — ADMINISTRATION — DATE — DISTRICT ROAD COMMISSIONER — DATE

FILE NO. 173-178 158700 AB

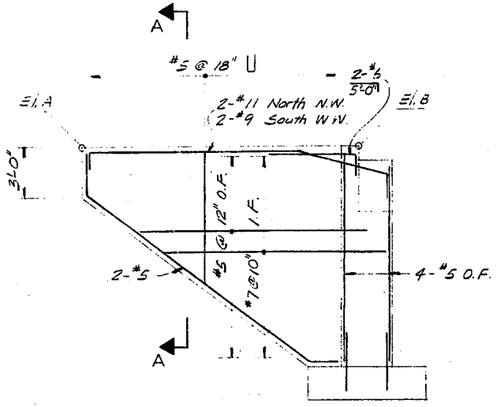

WINGWALL ELEVATION
1/4" = 1'-0"

WINGWALL ELEVATIONS		
LOCATION	A	B
Abut. 1 North W.W.	92.81	92.65
South W.W.	92.81	92.67
Abut. 4 North W.W.	90.71	90.91
South W.W.	90.66	90.87

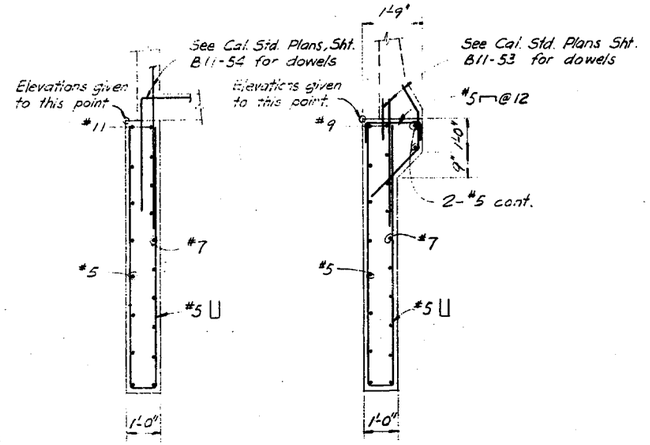

NORTH W.W. SOUTH W.W.

SECTION A-A
1/2" = 1'-0"

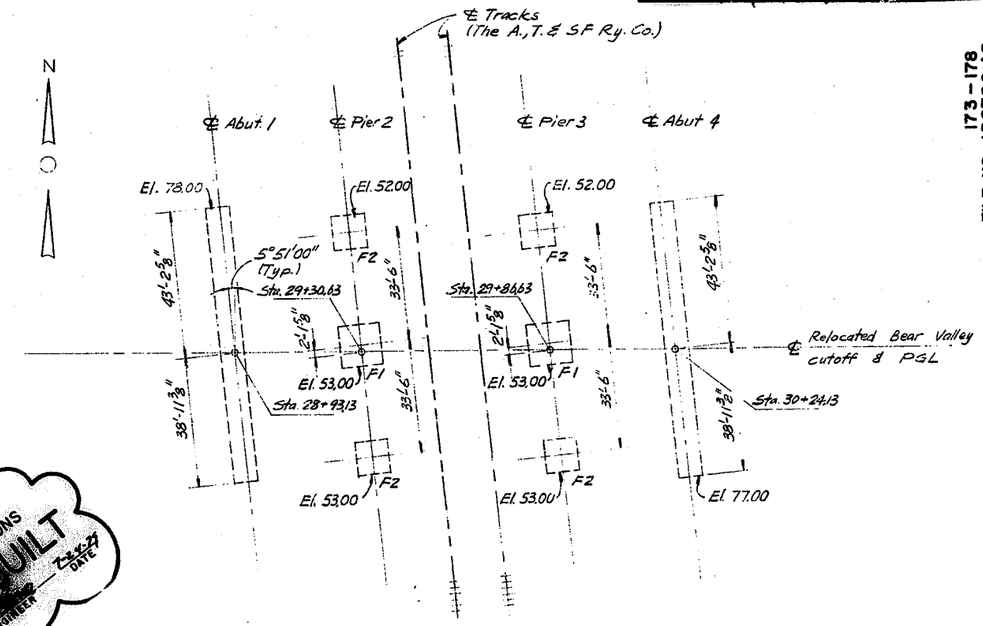

FOUNDATION PLAN
1" = 20'

ELEVATION SECTION

RESTRAINERS AT ABUTMENTS
No Scale

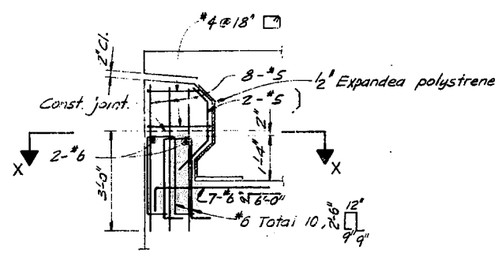

DETAIL 1
1/2" = 1'-0"

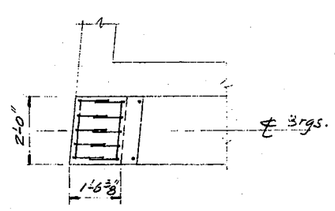

SECTION X-X
1/2" = 1'-0"

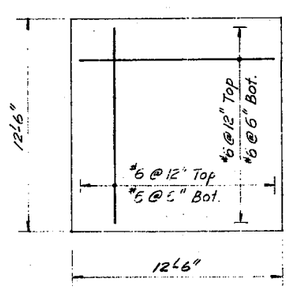

PLAN

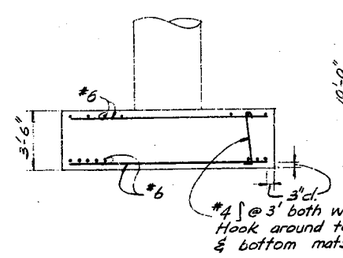

ELEVATION

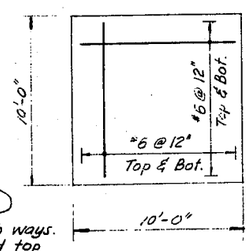

PLAN

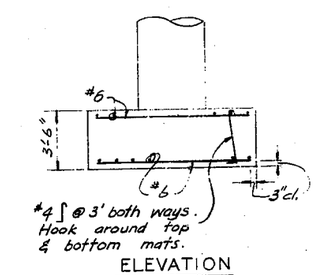

ELEVATION

FOOTING F1
1/4" = 1'-0"

FOOTING F2
1/4" = 1'-0"

NO CORRECTIONS AS BUILT
RESIDENT ENGINEER DATE

DESIGNED BY	DRAWN BY	CHECKED BY
H. Chin	E. Lok	R. Peterson

FILE NO. 173-178 158700 AB

REDUCED PLAN
0 1 2 3
3 INCHES ON ORIGINAL PLAN

DE LEUW, CATHER & COMPANY
CONSULTING ENGINEERS
SAN FRANCISCO, CALIFORNIA

Aug. 77

REGISTERED PROFESSIONAL ENGINEER — HARRY CHIN — No. 22922 — CIVIL — STATE OF CALIFORNIA

COUNTY OF SAN BERNARDINO
TRANSPORTATION DEPARTMENT
HESPERIA AREA

BEAR VALLEY CUTOFF

APATITE STREET TO TAMARISK AVENUE

ABUTMENT 1

W.O. NO. H 05347 | FIELD BOOK REF.

SUBMITTED BY — PROJECT ENGINEER — DATE 1/25/78

RECOMMENDED/APPROVED BY — DIR. TRANSP. - ADMINISTRATION — DATE 1/26/78 — COUNTY TRANS COMMISSIONER — DATE 1-25-78

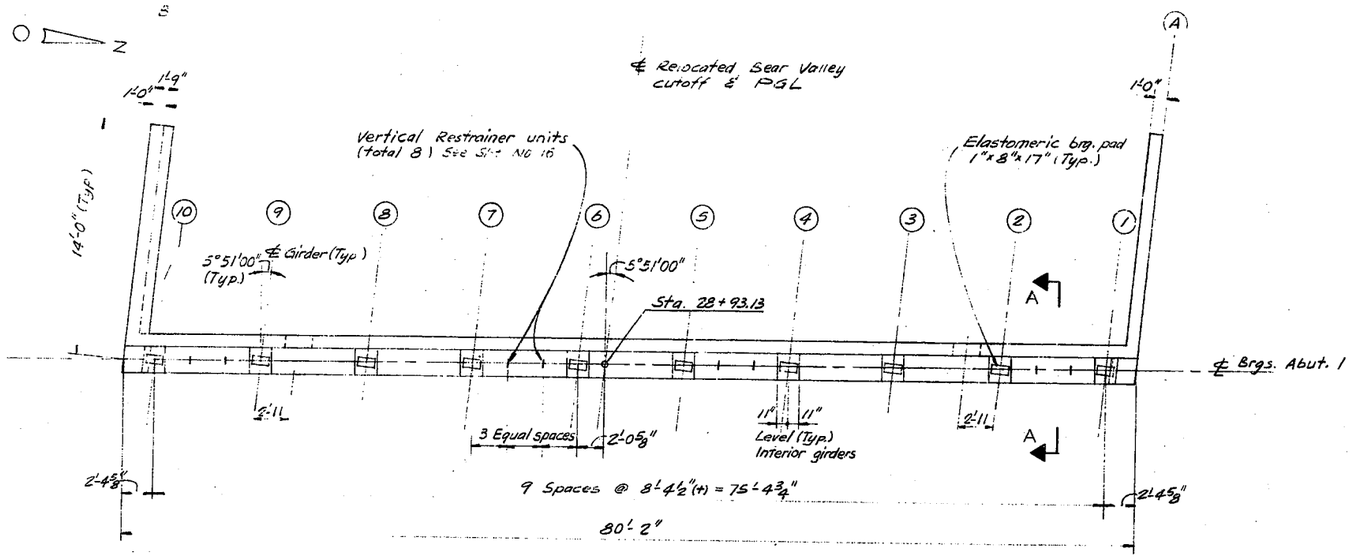

PLAN
3/16" = 1'-0"

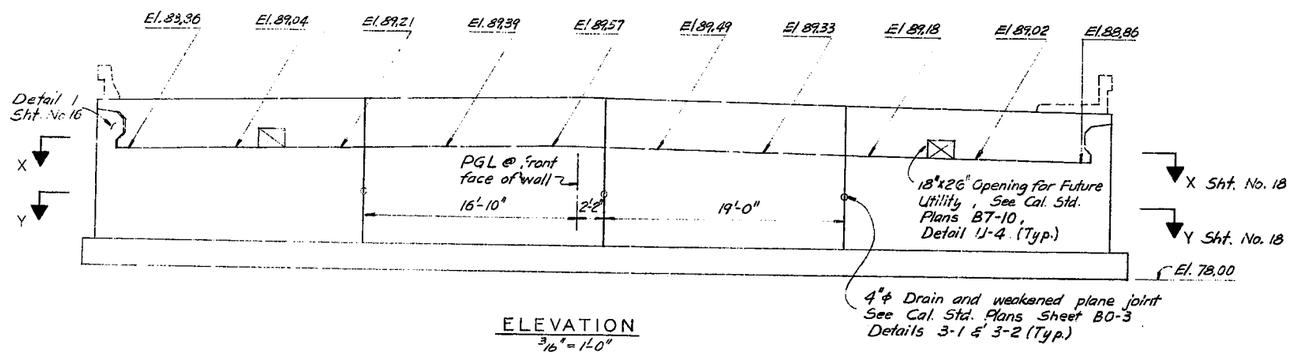

ELEVATION
3/16" = 1'-0"

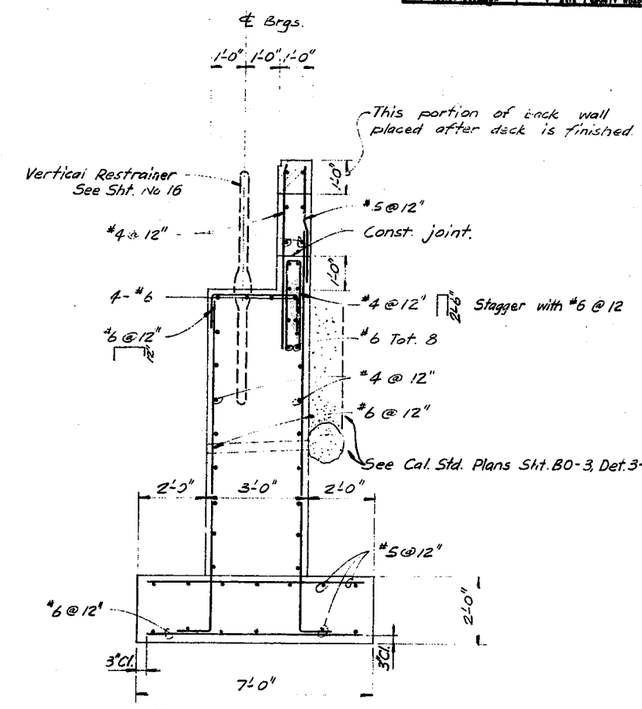

SECTION A-A
1/2" = 1'-0"

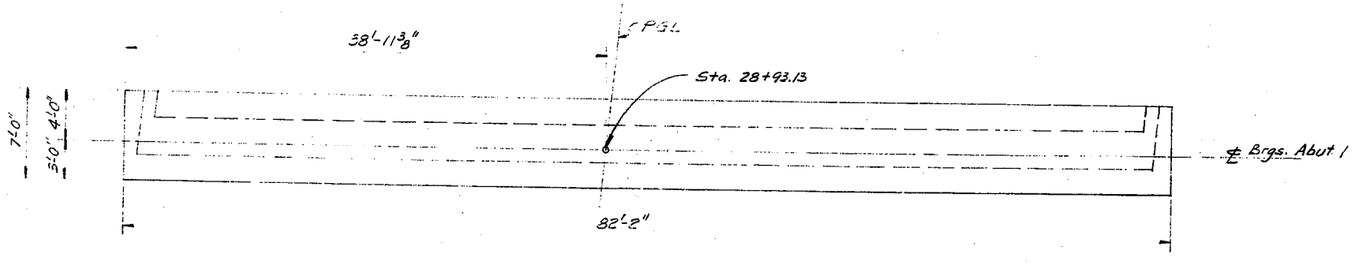

FOOTING PLAN
3/16" = 1'-0"

NO CORRECTIONS
AS BUILT
RESIDENT ENGINEER — DATE 7-24-79

173-178
FILE NO. 158700 AB

DESIGNED BY H. Chin | DRAWN BY E. Loh | CHECKED BY R. Peterson

173-178
FILE NO. 158700 AB

REDUCED PLAN
0 1 2 3
3 INCHES ON ORIGINAL PLAN

CONSULTING ENGINEERS
SAN FRANCISCO, CALIFORNIA

Aug. 77

REGISTERED PROFESSIONAL ENGINEER HARRY CHIN No 22922 CIVIL STATE OF CALIFORNIA

TRANSPORTATION DEPARTMENT

HESPERIA AREA

BEAR VALLEY CUTOFF

APATITE STREET TO TAMARISK AVENUE

ABUTMENT 4

W.O. NO. H0337 | FIELD BOOK REF.

SUBMITTED BY — PROJECT ENGINEER — DATE — CHIEF BRIDGE ENGINEER — DATE

RECOMMENDED & APPROVED BY — CHIEF ENGINEER - ADMINISTRATION — DATE — COUNTY ROAD COMMISSIONER — DATE

FILE NO. 173-178 158700 AB

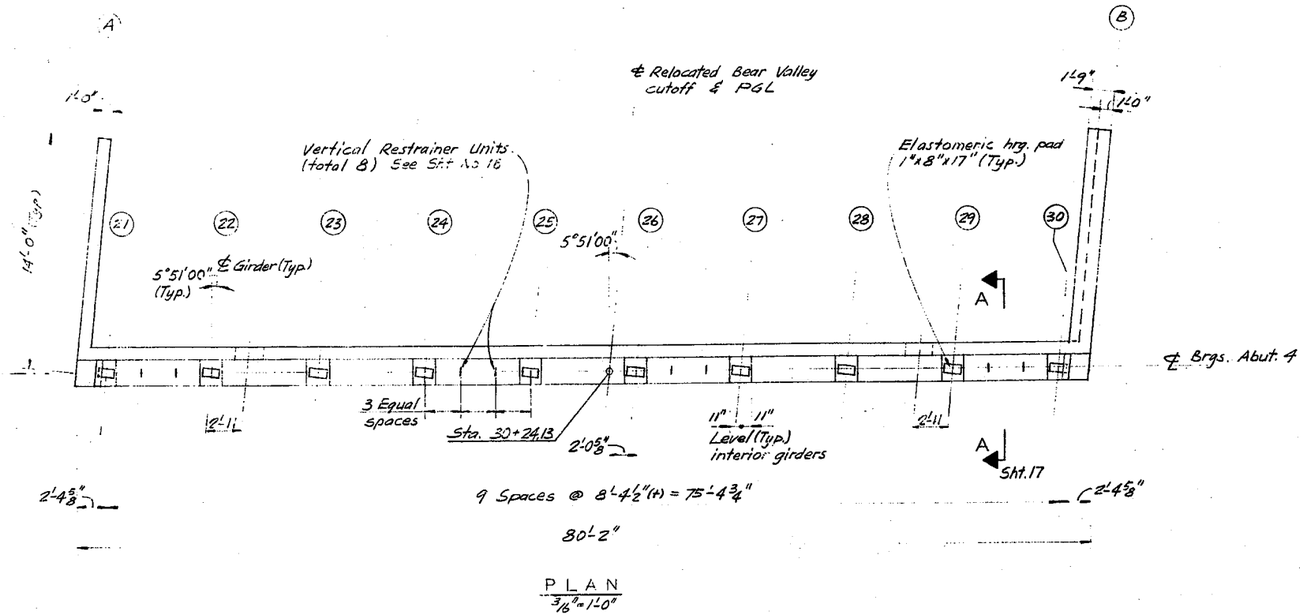

PLAN
3/16" = 1'-0"

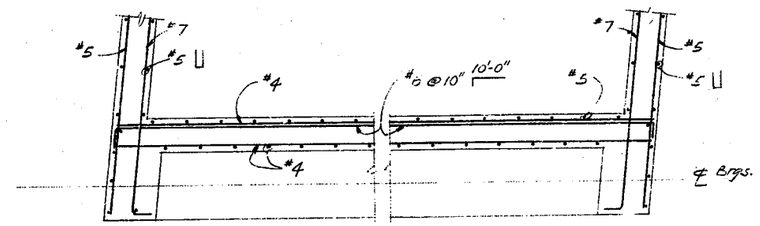

SECTION X-X
1/2" = 1'-0"

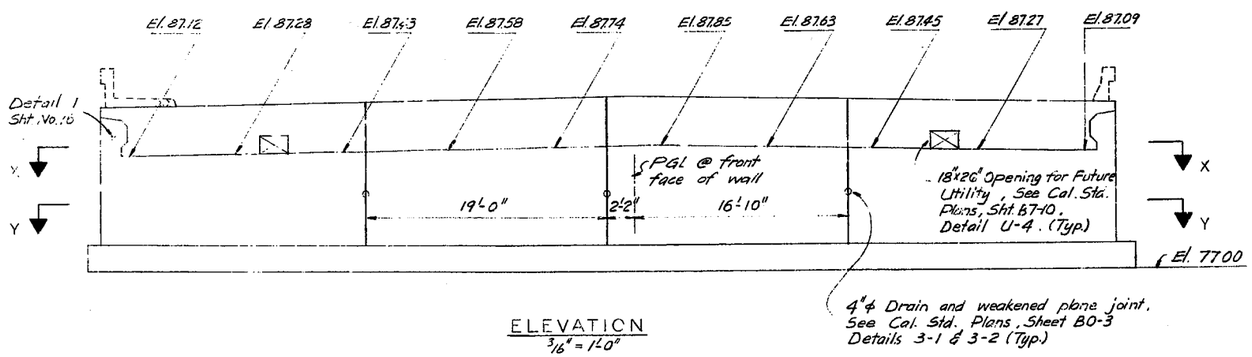

ELEVATION
3/16" = 1'-0"

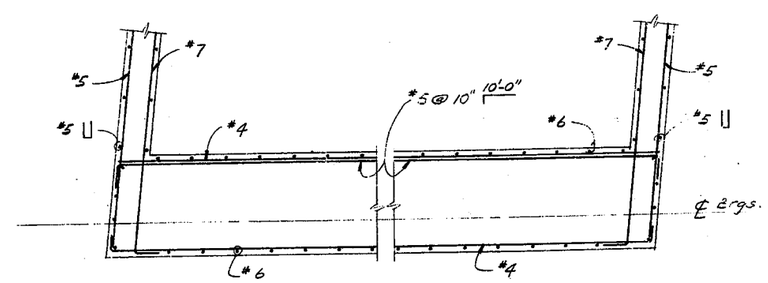

SECTION Y-Y
1/2" = 1'-0"

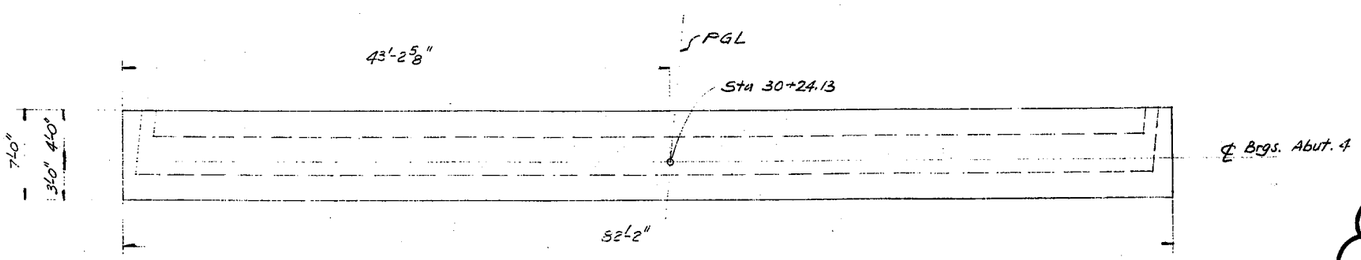

FOOTING PLAN
3/16" = 1'-0"

NO CORRECTIONS
AS BUILT
RESIDENT ENGINEER
2-24-78
DATE

DESIGNED BY	DRAWN BY	CHECKED BY
H. Chin	E. Loh	R. Peterson

FILE NO. 173-178 158700 AB

REDUCED PLAN
0 1 2 3
3 INCHES ON ORIGINAL PLAN

CONSULTING ENGINEERS
SAN FRANCISCO, CALIFORNIA

Aug. '77

REGISTERED PROFESSIONAL ENGINEER
LARRY UNDA
No. 22922
CIVIL
STATE OF CALIFORNIA

TRANSPORTATION DEPARTMENT

HESPERIA AREA

BEAR VALLEY CUTOFF

APATITE STREET TO TAMARISK AVENUE

PIERS 2 & 3

W.O. NO. H08347 | FIELD BOOK REF.

SUBMITTED BY | RECOMMENDED/APPROVED BY

PROJECT ENGINEER | DATE | ADMINISTRATION | DATE

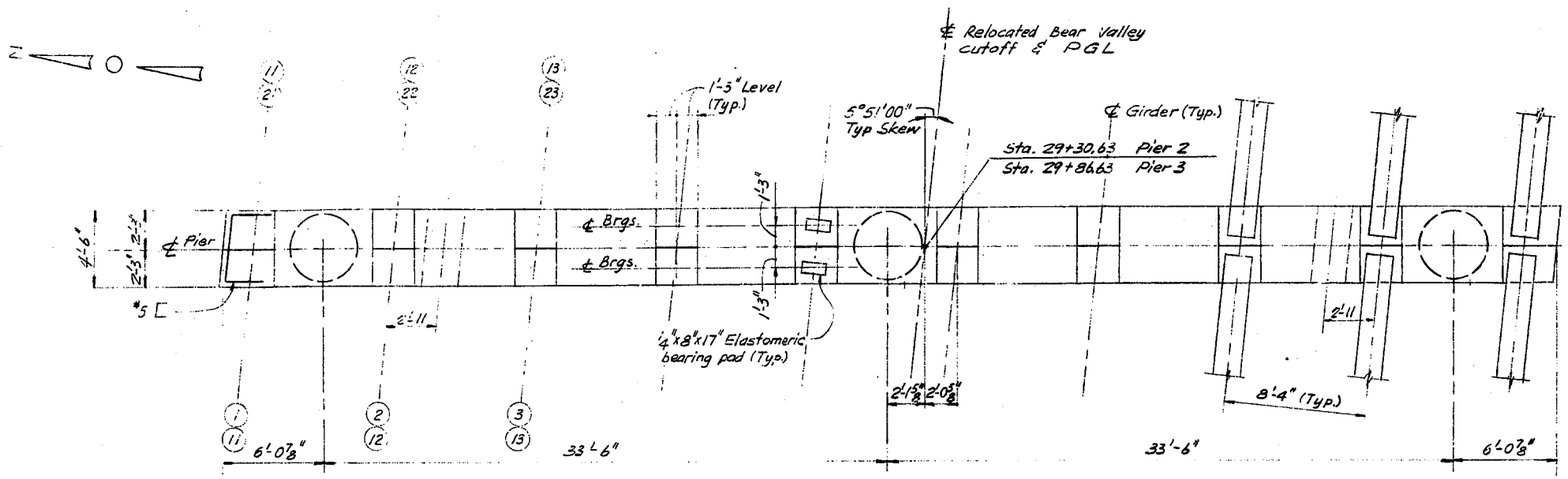

PLAN
¼"=1'-0"

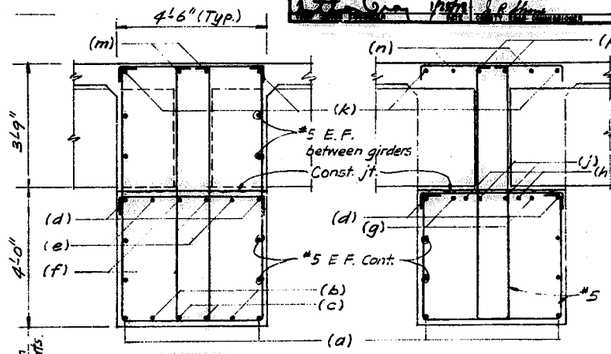

SECTION A-A
½"=1'-0"
Between Girders

SECTION B-B
½"=1'-0"
At Girder

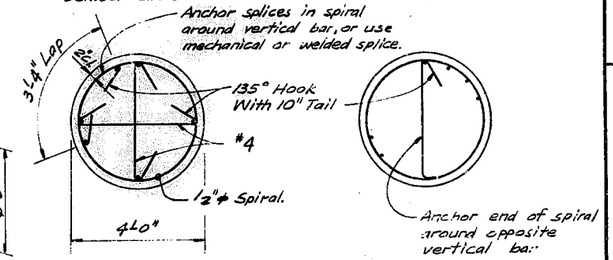

SECTION C-C
½"=1'-0"

DETAIL 1
½"=1'-0"

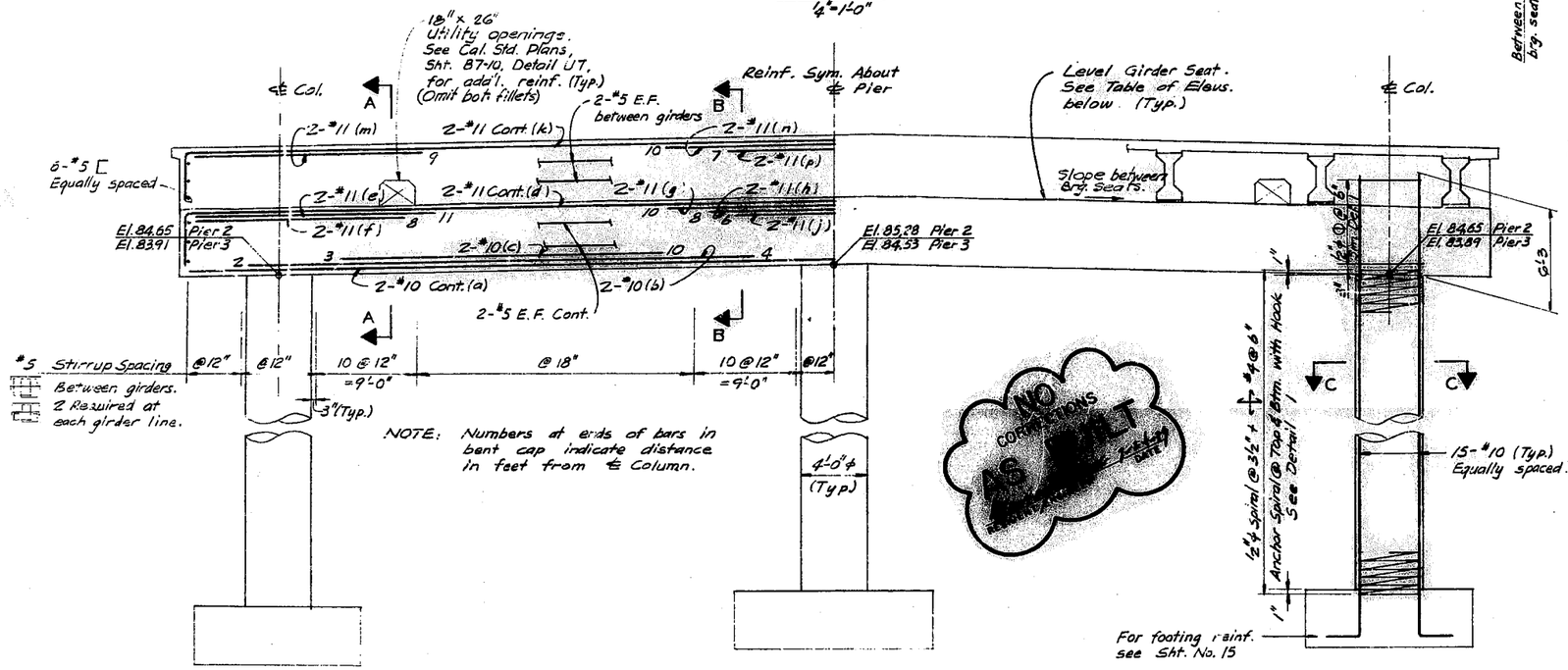

ELEVATION
¼"=1'-0"

Note: Add 2900.00 to all tabulated elevations.

GIRDER SEAT ELEVATIONS						
Girder	Pier 2		Girder	Pier 3		Girder
1	88.51	88.48	11	87.77	87.73	21
2	88.67	88.63	12	87.92	87.88	22
3	88.82	88.79	13	88.07	88.04	23
4	88.98	88.95	14	88.23	88.20	24
5	89.13	89.10	15	88.39	88.35	25
6	89.21	89.18	16	88.46	88.42	26
7	89.03	89.00	17	88.28	88.24	27
8	88.85	88.82	18	88.10	88.07	28
9	88.68	88.65	19	87.92	87.89	29
10	88.50	88.47	20	87.74	87.71	30

NO CORRECTIONS AS BUILT

173-178
FILE NO. 158700 AB

DESIGNED BY H. Chin | DRAWN BY E. Loh | CHECKED BY R. Anderson

173-178
FILE NO. 158700 AB

REDUCED PLAN
0 1 2 3
3 INCHES ON ORIGINAL PLAN

DE LEUW, CATHER & COMPANY
CONSULTING ENGINEERS
SAN FRANCISCO, CALIFORNIA

Aug. 77

REGISTERED PROFESSIONAL ENGINEER HARRY HIM No. 22922

COUNTY OF SAN BERNARDINO
TRANSPORTATION DEPARTMENT
HESPERIA AREA

BEAR VALLEY CUTOFF

APATITE STREET TO TAMARISK AVENUE

DECK PLAN & GIRDER LAYOUT

W.O. NO. H06437 | FIELD BOOK REF.
SUBMITTED BY | RECOMMENDED/APPROVED BY
PROJECT ENGINEER | DATE | ADMINISTRATION | DATE

173-178
FILE NO. 158700 AB

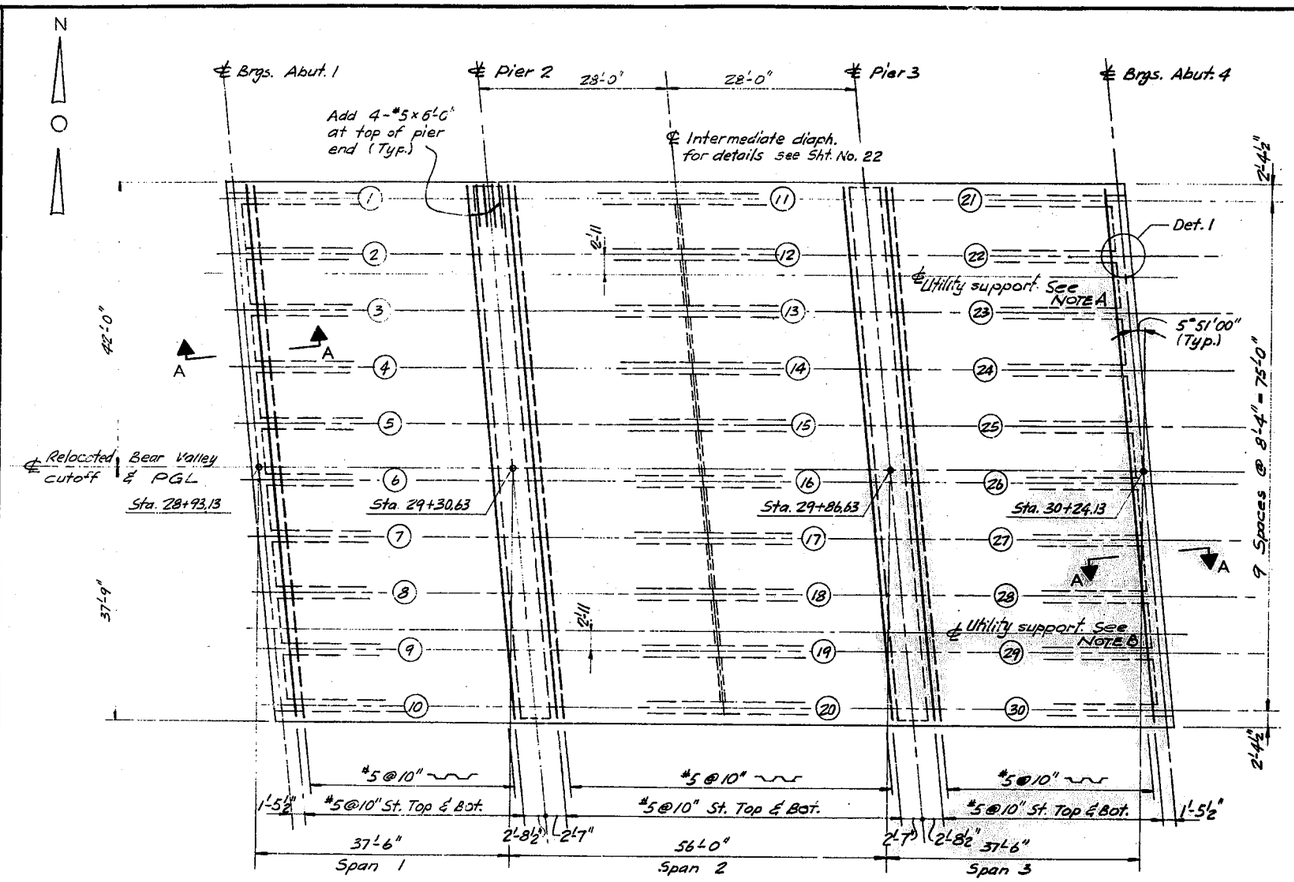

DECK PLAN
1" = 10'

NOTE A
Anchor bolts to be supplied by Southwest Gas Corp and installed by contractor.

NOTE B
Anchor bolts to be supplied by Hesperia County Water District and installed by contractor.

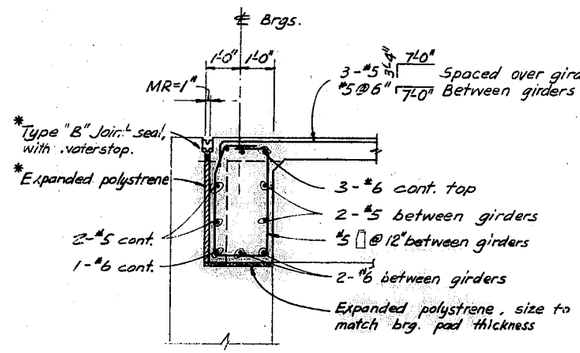

* NOTE: For construction dimensions of saw cuts and thickness of expanded polystrene to be used for joint seal size required see Cal. Std. Plans Sheet B6-21 and Sheet B0-3

SECTION A - A
½" = 1'-0"

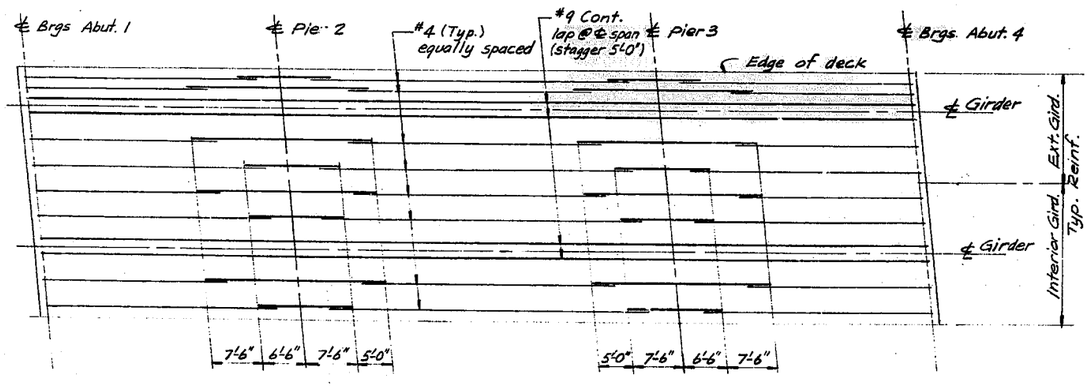

TOP LONGITUDINAL REINFORCEMENT
No Scale
All reinforcement #9 unless noted otherwise

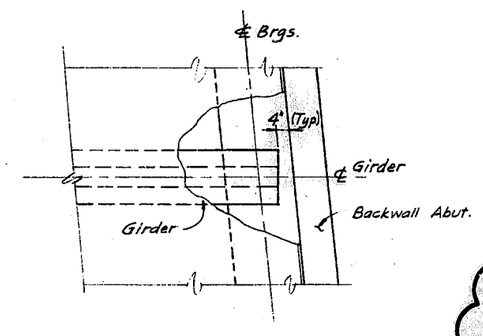

DETAIL 1
No scale

NO CORRECTIONS
AS BUILT
DATE

173-178
FILE NO. 158700 AB

REDUCED PLAN
0 1 2 3
3 INCHES ON ORIGINAL

DE LEUW, CATHER & COMPANY
CONSULTING ENGINEERS
SAN FRANCISCO, CALIFORNIA

Aug. 77

REGISTERED PROFESSIONAL ENGINEER HARRY CHIN No. 22922 CIVIL

COUNTY OF SAN BERNARDINO
TRANSPORTATION DEPARTMENT
HESPERIA AREA

BEAR VALLEY CUTOFF

APATITE STREET TO TAMARISK AVENUE
DECK DETAILS AND
MISCELLANEOUS DETAILS

W.O. NO. H 053347 | FIELD BOOK REF.
SUBMITTED BY | RECOMMENDED/APPROVED BY
PROJECT ENGINEER DATE | DIRECTOR - ADMINISTRATION DATE
1/25/82 | 1/25/82

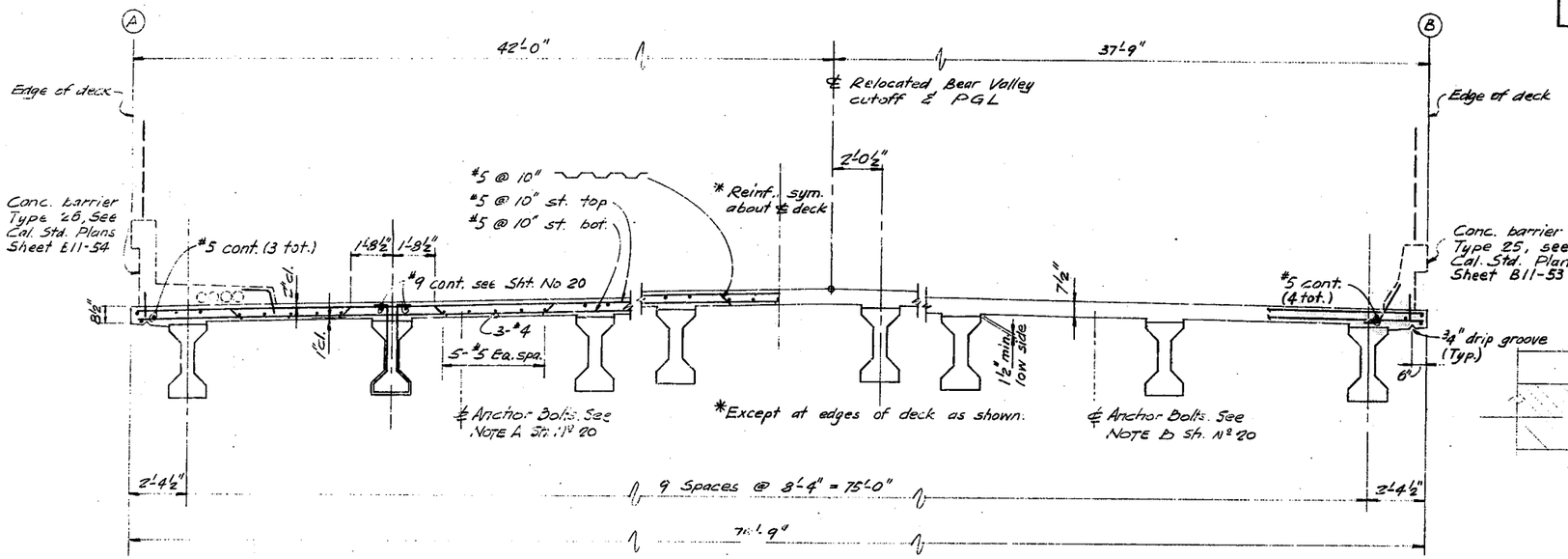

Note: For top deck longitudinal reinforcing see Sheet No. 20
For spacing of #5 transverse deck steel, see Cal. Std. Plans Sheet B0-5, Bridge Detail 5-10

TYPICAL SECTION
⅜" = 1'-0"

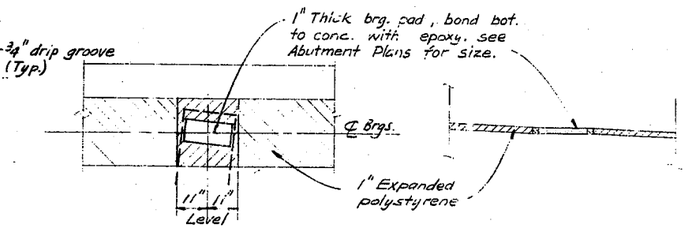

ABUTMENT BEARING SEAT DETAIL
½" = 1'-0"

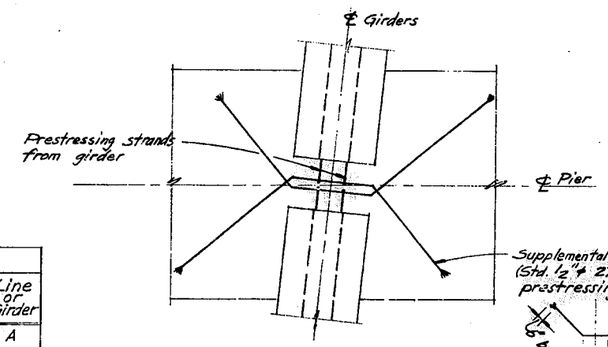

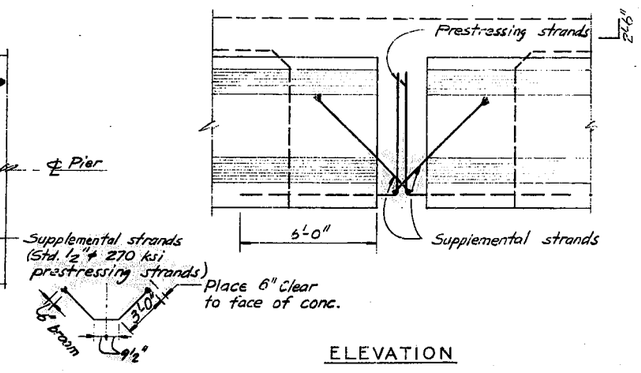

SUPPLEMENTAL STRANDS AT GIRDERS
¾" = 1'-0"

TABLE OF THEORETICAL DECK ELEVATIONS

Line or Girder	SPAN 1 ℄ Brg. Abut. 1	¼	½	¾	℄ Pier 2	Line or Girder	SPAN 2 ℄ Pier 2	¼	½	¾	℄ Pier 3	Line or Girder	SPAN 3 ℄ Pier 3	¼	½	¾	℄ Brg. Abut. 4	Line or Girder
A	92.66	92.56	92.46	92.35	92.24	A	92.24	92.06	91.88	91.69	91.49	A	91.49	91.36	91.22	91.08	90.93	A
1	92.71	92.61	92.50	92.39	92.28	1-11	92.28	92.11	91.92	91.74	91.54	11-21	91.54	91.40	91.26	91.12	90.97	21
2	92.87	92.76	92.66	92.55	92.44	2-12	92.44	92.26	92.08	91.89	91.69	12-22	91.69	91.56	91.42	91.27	91.13	22
3	93.02	92.92	92.82	92.71	92.59	3-13	92.59	92.42	92.23	92.04	91.85	13-23	91.85	91.71	91.57	91.43	91.28	23
4	93.18	93.08	92.97	92.86	92.75	4-14	92.75	92.57	92.39	92.20	92.00	14-24	92.00	91.86	91.72	91.58	91.43	24
5	93.34	93.24	93.13	93.02	92.91	5-15	92.91	92.73	92.55	92.35	92.16	15-25	92.16	92.02	91.88	91.73	91.59	25
PGL	93.46	93.35	93.25	93.14	93.02	PGL	93.02	92.85	92.66	92.47	92.27	PGL	92.27	92.14	91.99	91.85	91.70	PGL
6	93.42	93.31	93.20	93.09	92.98	6-16	92.98	92.80	92.62	92.43	92.23	16-26	92.23	92.09	91.95	91.81	91.66	26
7	93.24	93.14	93.03	92.92	92.80	7-17	92.80	92.63	92.44	92.25	92.05	17-27	92.05	91.91	91.77	91.63	91.48	27
8	93.06	92.96	92.85	92.74	92.63	8-18	92.63	92.45	92.26	92.07	91.87	18-28	91.87	91.73	91.59	91.45	91.30	28
9	92.89	92.78	92.67	92.56	92.45	9-19	92.45	92.27	92.08	91.89	91.69	19-29	91.69	91.55	91.41	91.27	91.12	29
10	92.71	92.61	92.50	92.39	92.27	10-20	92.27	92.09	91.91	91.71	91.51	20-30	91.51	91.37	91.23	91.09	90.94	30
B	92.66	92.56	92.45	92.34	92.22	B	92.22	92.04	91.86	91.66	91.46	B	91.46	91.32	91.18	91.03	90.88	B

NO CONTRACTIONS AS BUILT
DATE

173-178
FILE NO. 158700 AB

DESIGNED BY H. Chin | DRAWN BY E. Loh | CHECKED BY R. Peterson

173-178
FILE NO. 158700 AB

REDUCED PLAN
0 1 2 3
3 INCHES ON ORIGINAL PLAN

DESIGN ENGINEER — REGISTERED CIVIL ENGINEER NUMBER

DATE APPROVED

173–178
FILE NO. 158700 AB

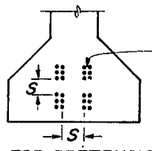

CLEARANCES FOR PRETENSIONED STRANDS

1. Strands may be bundled in groups consisting of 3 vertically and 2 horizontally, and separated at the ends
2. The min. distance "S" between groups or individual strands is 1½" for ⅜" strands, 1¾" for 7/16" strands and 2" for ½" strands.
3. "S" is measured between centers of adjacent strands.
4. Approval of the Engineer is required for deviation.

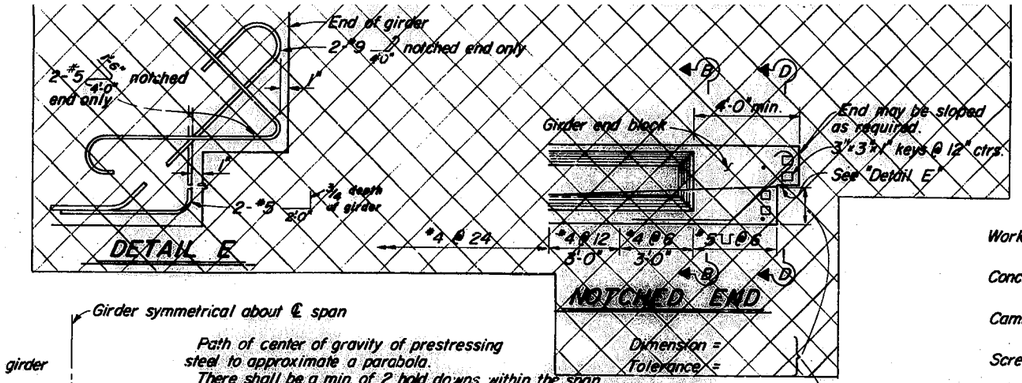

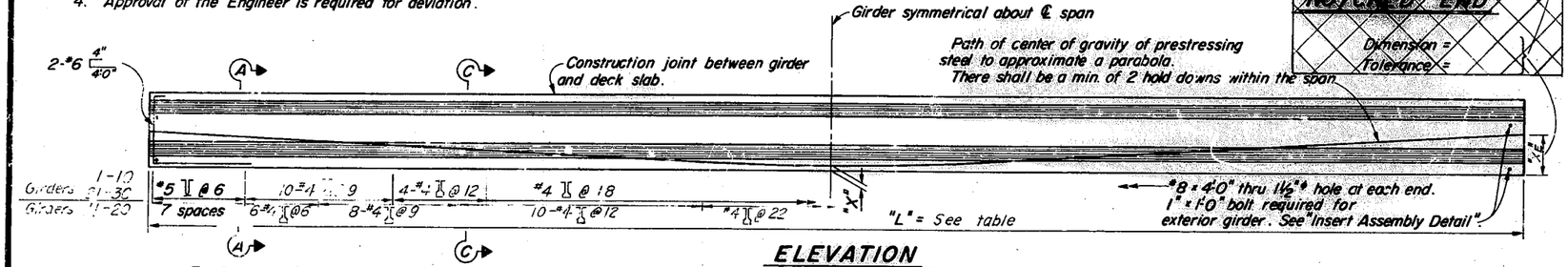

ELEVATION

PRESTRESSING NOTES

Working Force: The force required at center of span after all losses.

Concrete Strength: f'_{ci} is at time of initial stressing, f'_c is at 28 days, psi.

Camber: Girder soffit is to be cast parabolic with value shown as ordinate at ℄ span.

Screed line elevations for deck concrete will be determined by the Engineer.

Contractor may interpolate "P" and "X" values between limits shown, as approved by the Engineer.

Girder location or designation and length	P = Working force in Kips. "X"		"XE"	Concrete Strength f'_{ci}	f'_c	Deflection at ℄ Span due to CIP Slab	Girder Camber at ℄ Span
1 10 21 30 (L=37'-7 9/16)	5'-4"	285	10 3/8	3500 psi	4200 psi	0.150"	0"
11 20 (L=55'-1")	5'-2"	505	12 15/16	4200 psi	4200 psi	0.675"	0"

* 1. Additional strands to be located 6" from bottom.
2. May use regular prestressing strands of the girder if they are located within the bottom one foot of the girder.

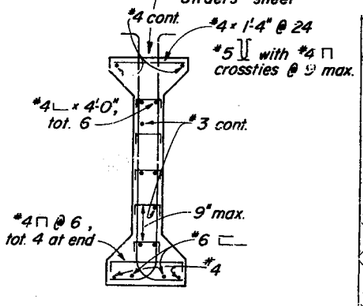

SECTION A-A

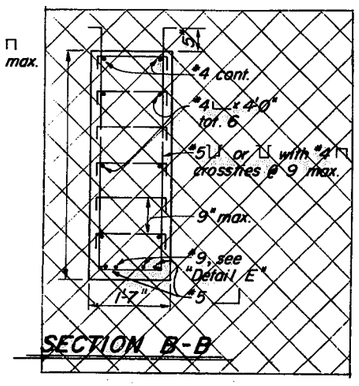

SECTION B-B

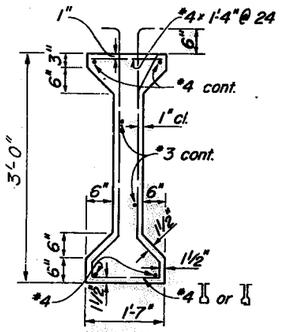

SECTION C-C

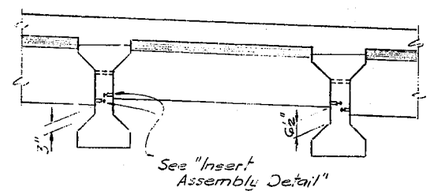

INTERMEDIATE DIAPHRAGM
(At Utility Opening)

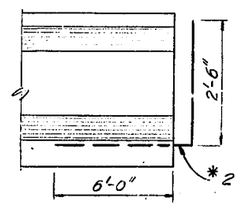

DETAIL E

* 2 Additional strands

NO CORRECTIONS
AS BUILT
RESIDENT ENGINEER — DATE

NOTE:
Details shown are for Pretensioned Girders. The Contractor may submit details for Post tensioning which shall be subject to the approval of the Engineer.

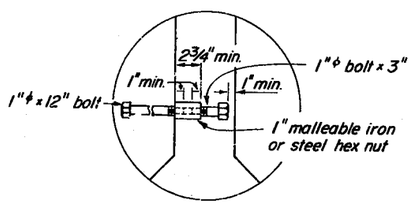

INSERT ASSEMBLY DETAIL

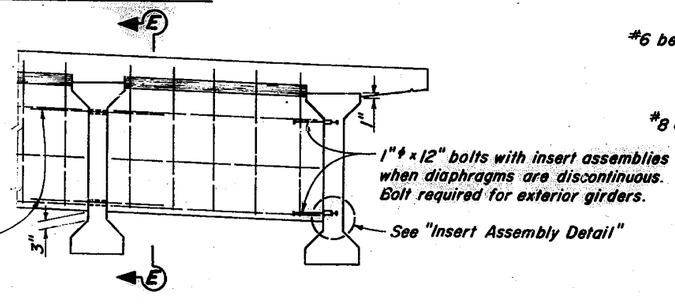

INTERMEDIATE DIAPHRAGM
(Except At Utility Opening)

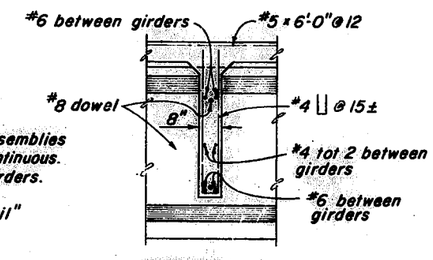

SECTION E-E

Changes and additions to this sheet by De Leuw, Cather and Company Engineers, San Francisco, Cal. Aug 77

STANDARD DRAWING

FILE No. XS-12-36	DESIGN	By: L. N. Bauman	Checked	
DRAWING DATE 12/76	DETAILS	By: K.C. Blechinger	Checked	
	SUBMITTED BY			

Approval Recommended By — REGISTERED CIVIL ENGINEER NUMBER 7383

HBD D 147

State of CALIFORNIA — DEPARTMENT OF TRANSPORTATION

STRUCTURES-DESIGN

BRIDGE No. — POST MILE

COUNTY OF SAN BERNADINO

BEAR VALLEY CUTOFF

PRESTRESSED I GIRDER

ORIGINAL SCALE IN INCHES FOR REDUCED PLANS 0 1 2 3

GU WO

Disregard prints bearing earlier revision dates

REVISION DATES (FOR DEPARTMENT USE ONLY)

SHEET 22 OF 23

REDUCED PLAN
0 1 2 3
3 INCHES ON ORIGINAL PLAN

173–178
FILE NO. 158700 AB

MARK	REVISIONS	APPR.	DATE

DE LEUW, CATHER & COMPANY
CONSULTING ENGINEERS
SAN FRANCISCO, CALIFORNIA

Aug. 77

REGISTERED PROFESSIONAL ENGINEER HARRY CHIN No. 22922 CIVIL STATE OF CALIFORNIA

COUNTY OF SAN BERNARDINO
TRANSPORTATION DEPARTMENT

HESPERIA AREA

BEAR VALLEY CUTOFF

APATITE STREET TO TAMARISK AVENUE

SLOPE PAVING DETAILS

W.O. NO. H06347 | FIELD BOOK REF.

SUBMITTED BY: PROJECT ENGINEER — DATE 1/5/78
RECOMMENDED/APPROVED BY: ASST. ROAD COMM.—PLANNING & ENGR. — DATE
APPROVED BY: DIR. DIVISION OF TRANSPORTATION — DATE 1/12/78
DIRECTOR OF TRANSPORTATION — DATE 1-18-78

FILE NO. 173-178
158700 AB

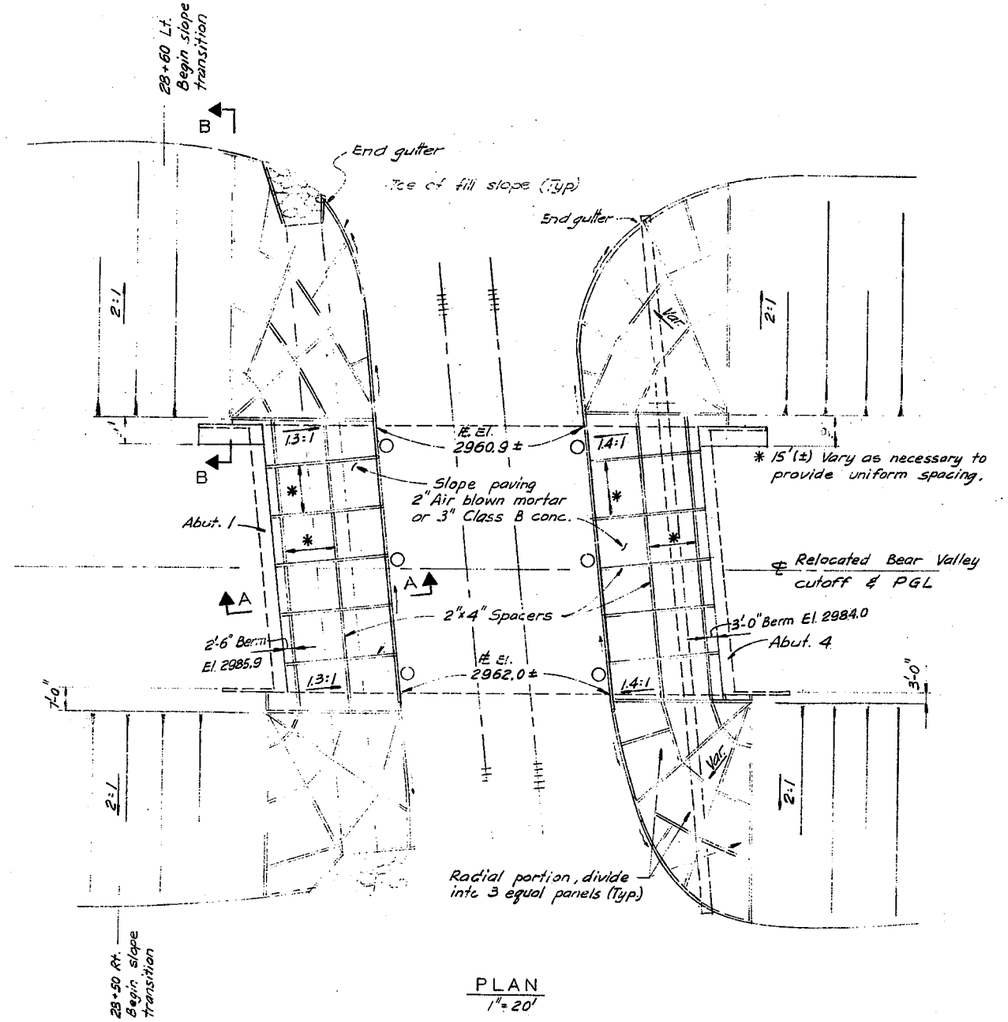

PLAN
1" = 20'

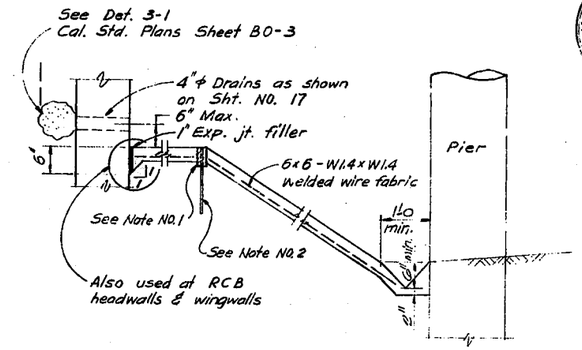

SECTION A-A
No scale

Notes:

1. For spacers use 2"x4" redwood on 15'(±) centers in both directions.
2. Place #4x18" reinf. steel bars @ 6'(±) intervals through all 2"x4" spacers.

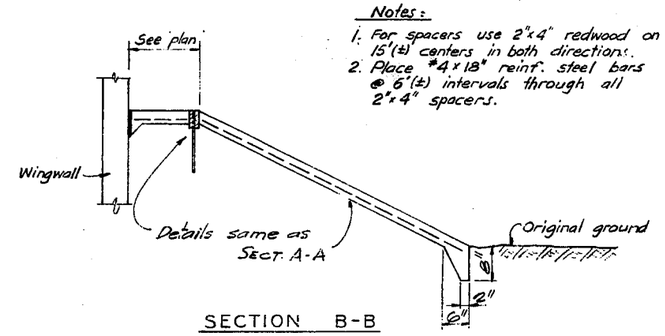

SECTION B-B
No scale

APPROXIMATE QUANTITIES

DESCRIPTION	QUANTITY
FURNISH PRESTRESSED "I" GIRDERS	
38 FEET	20 EA.
55 FEET	10 EA.
ERECT PRESTRESSED "I" GIRDERS	
38 FEET	20 EA.
55 FEET	10 EA.
WATERSTOPS	150 L.F.
JOINT SEAL, TYPE (B)	155 L.F.
RESTRAINER UNIT (TYPE 2)	16 UNITS
CHAIN LINK RAILING (TYPE 7)	317 L.F.
CONCRETE BARRIER (TYPE 25)	160 L.F.
CONCRETE BARRIER (TYPE 26)	160 L.F.

FINAL PAY QUANTITIES

DESCRIPTION	QUANTITY
STRUCTURE EXCAVATION	930 C.Y.
STRUCTURE BACKFILL	650 C.Y.
STRUCTURE CONCRETE, BRIDGE FOOTING	180 C.Y.
STRUCTURE CONCRETE, BRIDGE	760 C.Y.
SLOPE PAVING	225 C.Y.
BAR REINFORCING STEEL	147,200 LBS.
SUPPLEMENTAL REINFORCING (STRANDS)	1,000 LBS.

LIST OF STANDARD PLANS

State of California, Business and Transportation Agency, Department of Transportation, Standard Plans - March 1977, Edition.

A62-B8	B7-10
B0-3	B11-53
B0-5	B11-54
B6-21	

NO CORRECTIONS
AS BUILT
RESIDENT ENGINEER — DATE

DESIGNED BY	DRAWN BY	CHECKED BY
H. Chin	E. Loh	R. Peterson

FILE NO. 173-178
158700 AB

REDUCED PLAN
0 1 2 3
3 INCHES ON ORIGINAL PLAN

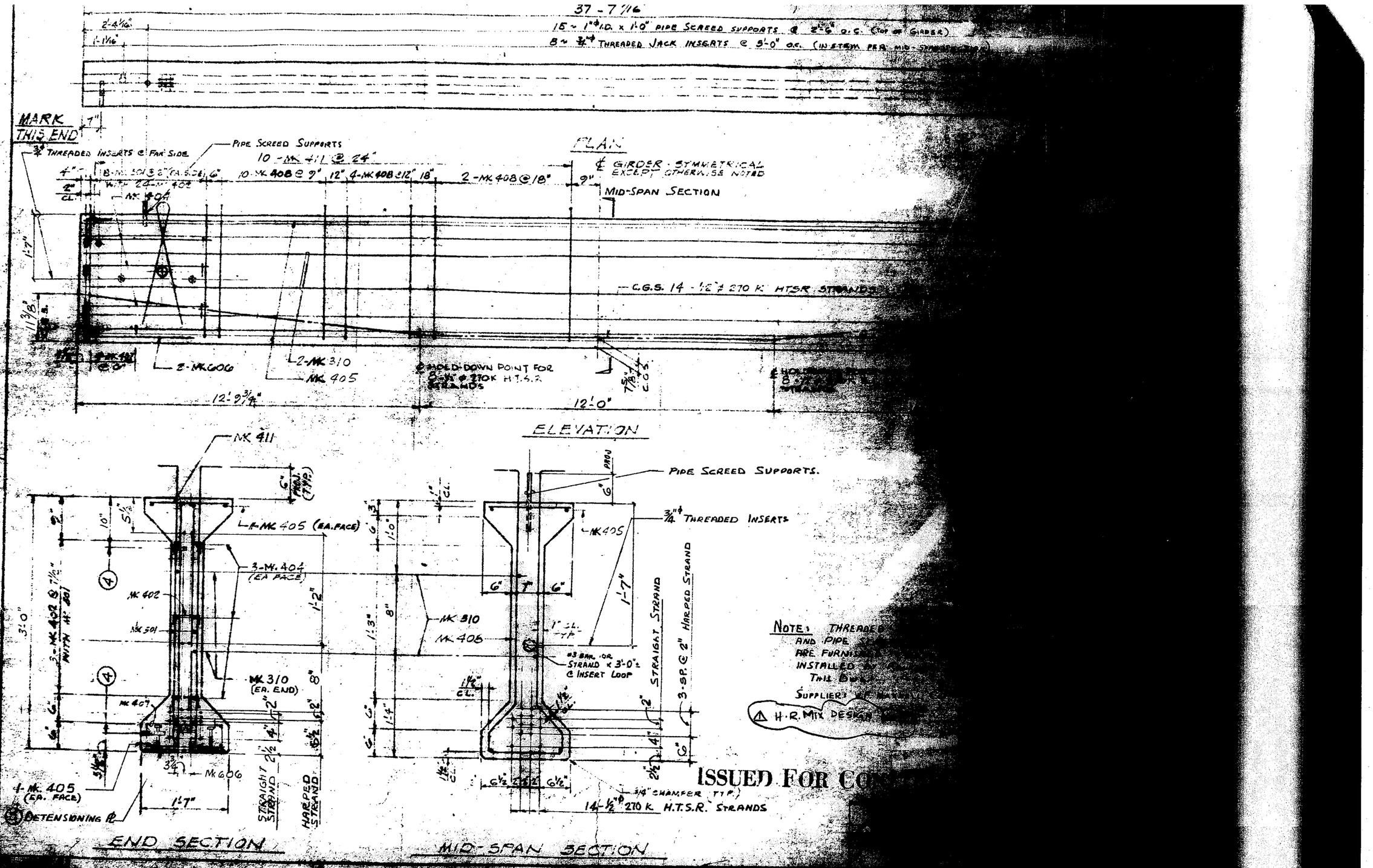
37 - 7 1/16
15 ~ 1" ϕ I.D. x 1'-0" PIPE SCREED SUPPORTS @ 2'-6" O.C. (TOP OF GIRDER)
8 ~ 3/4" ϕ THREADED JACK INSERTS @ 3'-0" O.C. (IN STEM PER MID-SPAN SECTION)
MARK THIS END
3/4" ϕ THREADED INSERTS @ FAR SIDE
PIPE SCREED SUPPORTS
10 - MK 411 @ 24"
10 - MK 408 @ 9"
12" 4 - MK 408 @ 12"
18"
2 - MK 408 @ 18"
PLAN
℄ GIRDER - SYMMETRICAL EXCEPT OTHERWISE NOTED
MID-SPAN SECTION
C.G.S. 14 - 1/2" ϕ 270 K HTSR STRANDS
2 - MK 606
2 - MK 310
MK 405
HOLD-DOWN POINT FOR 2 - 1/2" ϕ 270K H.T.S.R. STRANDS
12'-9 31/32"
12'-0"
ELEVATION
MK 411
1 - MK 405 (EA. FACE)
3 - MK. 404 (EA FACE)
MK 402
MK 501
MK 310 (EA. END)
MK 407
MK 606
1 - MK. 405 (EA. FACE)
DETENSIONING ℄
1'-7"
STRAIGHT STRAND
HARPED STRAND
END SECTION
PIPE SCREED SUPPORTS.
3/4" ϕ THREADED INSERTS
MK 405
MK 310
MK 405
#3 BAR 10" STRAND x 3'-0" ± @ INSERT LOOP
STRAIGHT STRAND
HARPED STRAND
3 - SP. @ 2"
14 - 1/2" ϕ 270 K H.T.S.R. STRANDS
3/4" CHAMFER (TYP.)
MID-SPAN SECTION
NOTE: THREADED AND PIPE ARE FURNISHED INSTALLED BY THIS BIDDER
SUPPLIER'S
H.R. MIX DESIGN
ISSUED FOR CO
CONCRETE CORP.
CALIF. 213 821-3561
PRESTRESSED I-GIRDER : G-1

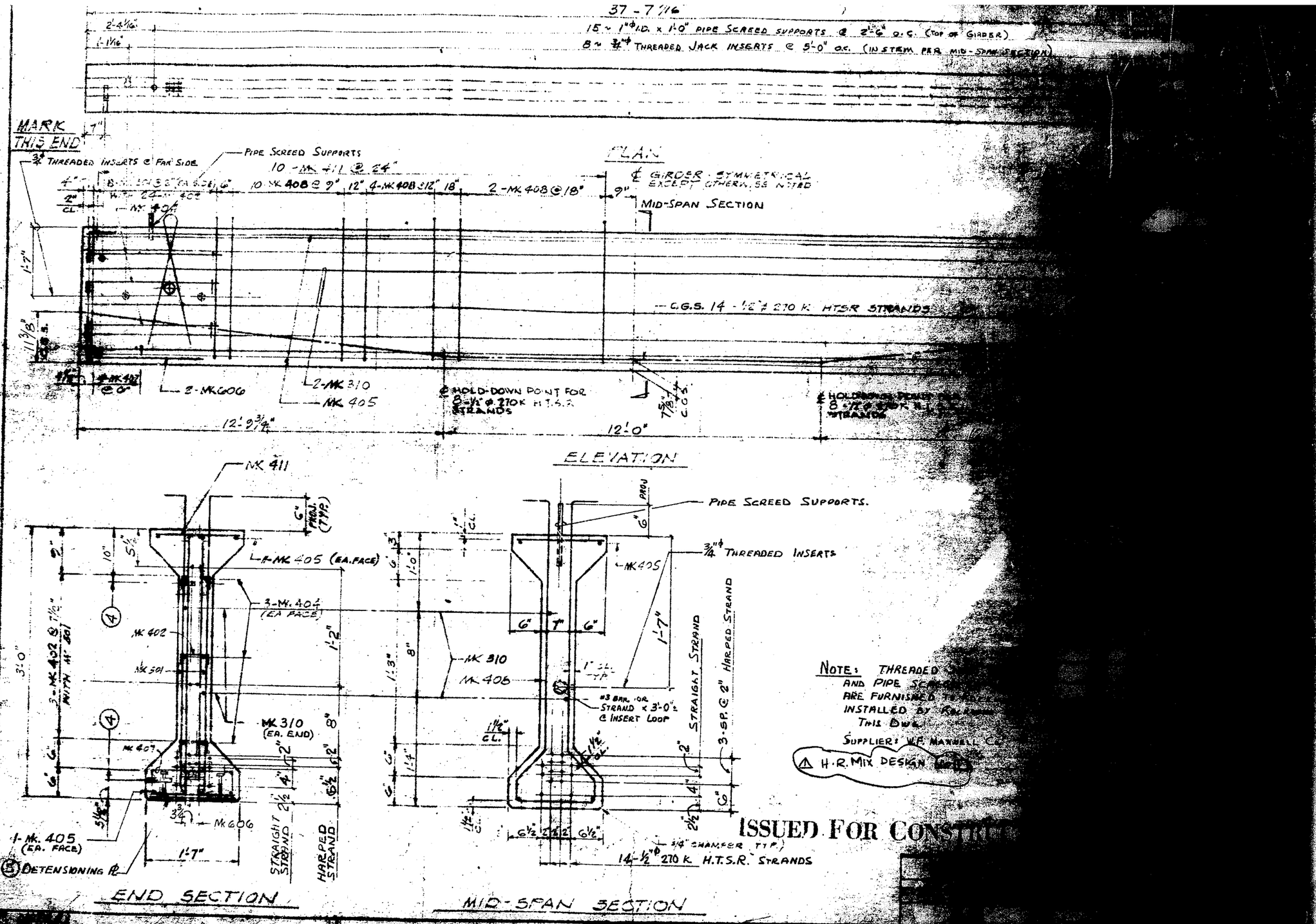

NOTE: THREADED [illegible] AND PIPE SCREED [illegible] ARE FURNISHED [illegible] INSTALLED BY [illegible] THIS DWG.
SUPPLIER: W.F. MAXWELL CO.

⚠ H.R. MIX DESIGN [illegible]

ISSUED FOR CONSTRUCTION

[illegible] SECTION PLAN SEE DWG. G-1
[illegible] AGGREGATE & HARDROCK
[illegible] = 3500
[illegible] = 4000
[illegible] 4.18
[illegible] 847
JACKING FORCE 289

ROCKWIN PRESTRESSED CONCRETE CORP.
[illegible] E. INDUSTRIAL HWY. - SANTA FE SPRINGS, CALIF. 213/921-3561

PRESTRESSED I-GIRDER : G-1
2-PAGE

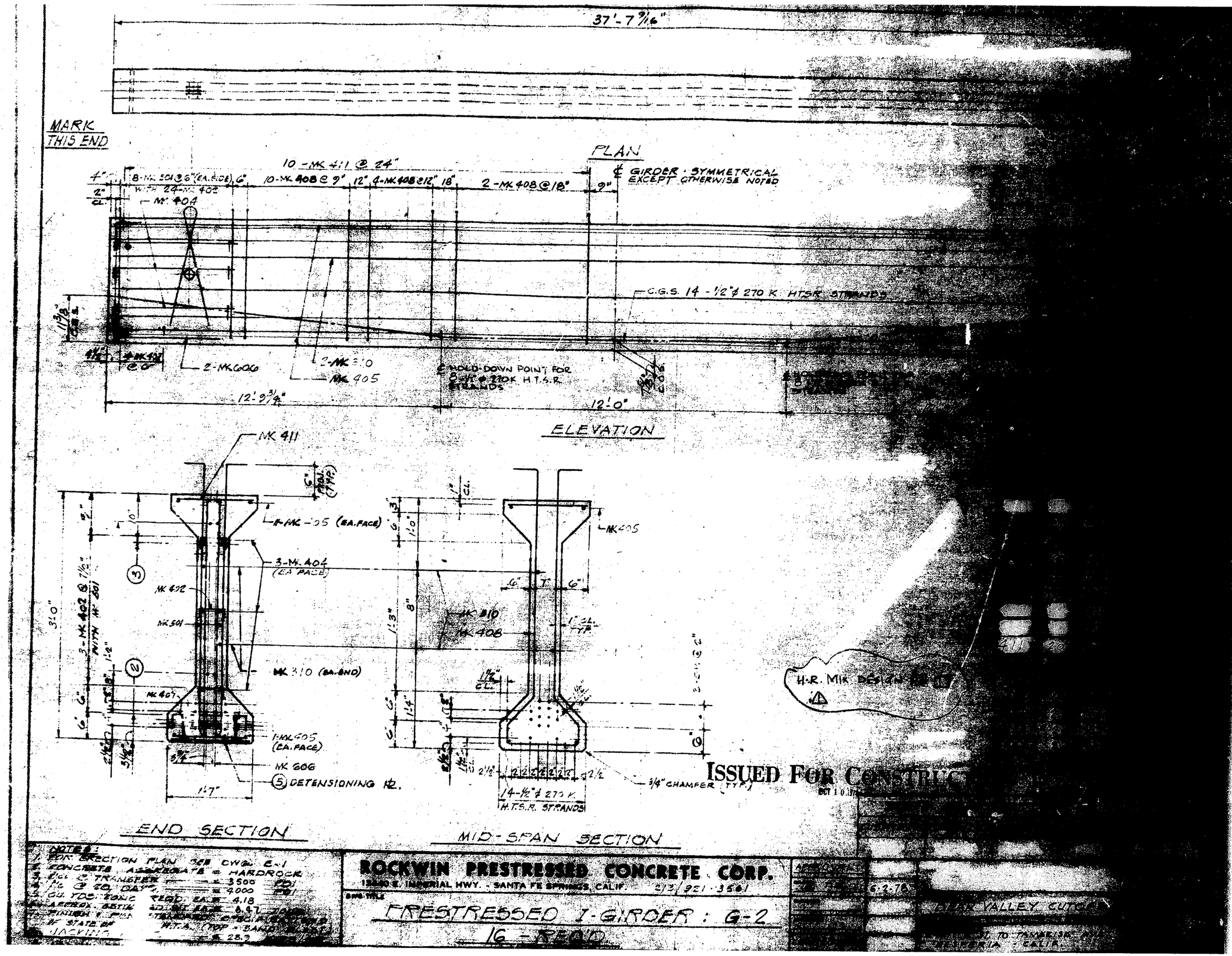
37'-7 9/16"
MARK THIS END
PLAN
℄ GIRDER - SYMMETRICAL EXCEPT OTHERWISE NOTED
10 - MK 411 @ 24"
8-MK 501 @ 6" (EA. FACE)
W/ 24-MK 402
10-MK 408 @ 9"
4-MK 408 @ 12"
2-MK 408 @ 18"
MK 404
C.G.S. 14 - 1/2"ϕ 270 K HTSR STRANDS
2-MK 606
MK 405
℄ HOLD-DOWN POINT FOR 8-1/2"ϕ 270K H.T.S.R. STRANDS
12'-9 3/4"
12'-0"
ELEVATION
MK 411
4-MK 405 (EA. FACE)
3-MK 404 (EA FACE)
MK 402
MK 501
MK 310 (EA. END)
MK 404
1-MK 605 (EA. FACE)
MK 606
DETENSIONING HD.
1'-7"
MK 405
MK 310
MK 408
14-1/2"ϕ 270 K. H.T.S.R. STRANDS
3/4" CHAMFER (TYP.)
END SECTION
MID-SPAN SECTION
H.R. MIK DESIGN
ISSUED FOR CONSTRUCTION
OCT 10 1978
NOTES:
1. FOR ERECTION PLAN SEE DWG. E-1
2. CONCRETE AGGREGATE = HARDROCK
3. f'ci @ TRANSFER = 3500 PSI
4. f'c @ 28 DAYS = 4000 PSI
5. CU. YDS. CONC. REQ. EA. = 4.18
6. APPROX. BRIDGE WT. EA. = 6.47 TONS
7. FINISH & PAINT TEMPORARY CHECK PER
8. IF STATE OF HIGHWAY (TOP - SAND
JACKING = 28.3
ROCKWIN PRESTRESSED CONCRETE CORP.
12200 E. IMPERIAL HWY. - SANTA FE SPRINGS, CALIF. 213/921-3661
PRESTRESSED I-GIRDER : G-2
16 - READ
6-2-78
VALLEY CUTOFF
TO TAMARISK AVE.
FEDERIA - CALIF.

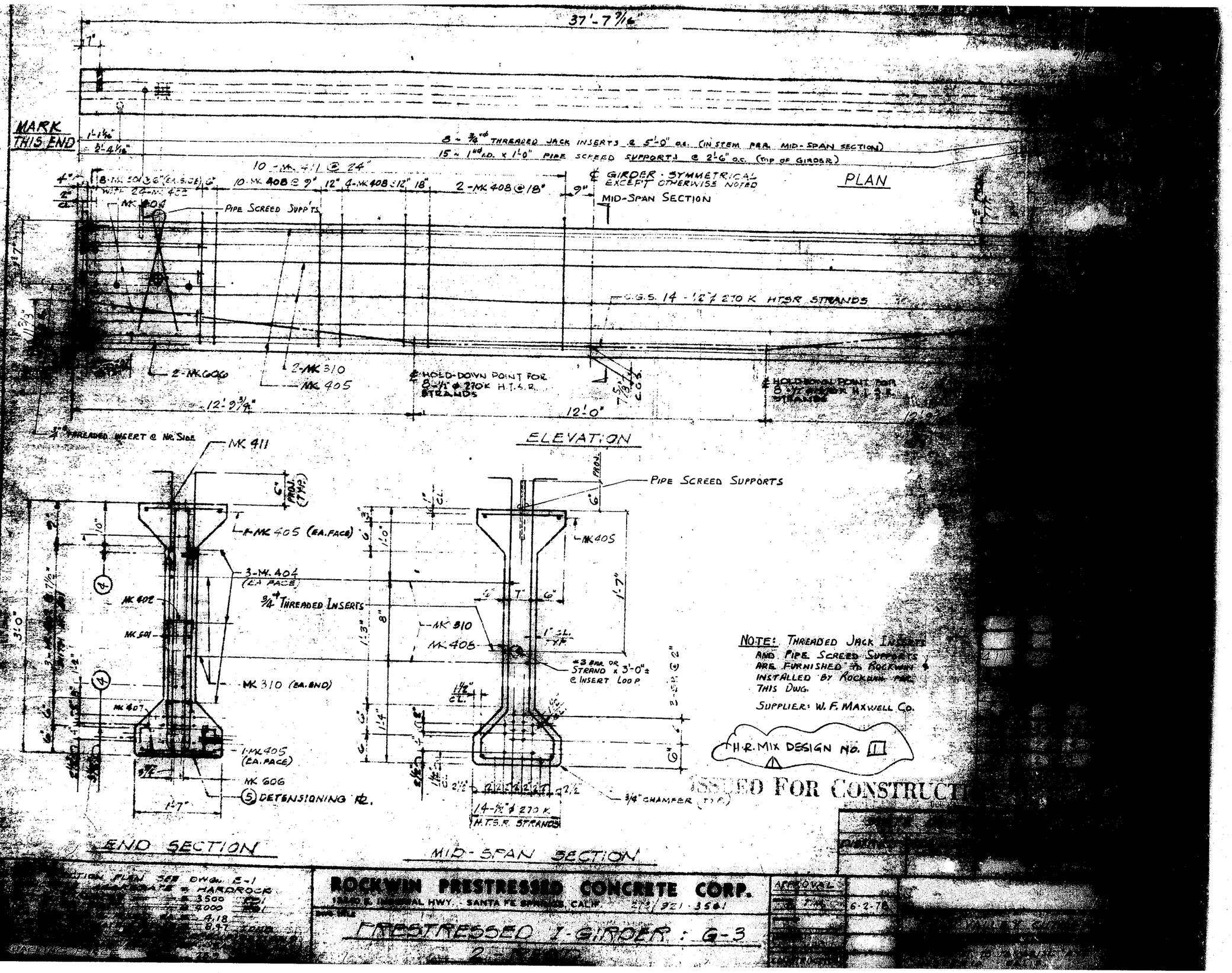
37'-7 9/16"
MARK THIS END
1'-1 1/16"
2'-4 1/16"
8 - 3/4"φ THREADED JACK INSERTS @ 5'-0" o.c. (IN STEM PER MID-SPAN SECTION)
15 - 1" I.D. x 1'-0" PIPE SCREED SUPPORTS @ 2'-6" o.c. (TOP OF GIRDER)
10 - MK 411 @ 24"
8 - MK 501 @ 6" (EA. SIDE) @ 6" WITH 24 - MK 402
10 - MK 408 @ 9"
12" 4 - MK 408 @ 12"
18"
2 - MK 408 @ 18"
9"
℄ GIRDER - SYMMETRICAL EXCEPT OTHERWISE NOTED
PLAN
MID-SPAN SECTION
MK 404
PIPE SCREED SUPP'TS
C.G.S. 14 - 1/2" ϕ 270 K HTSR STRANDS
2 - MK 606
2 - MK 310
MK 405
℄ HOLD-DOWN POINT FOR 8 - 1/2" ϕ 270K H.T.S.R. STRANDS
12'-9 3/4"
12'-0"
ELEVATION
3/4" THREADED INSERT @ NR. SIDE
MK 411
6" PROJ. (TYP.)
4 - MK 405 (EA. FACE)
3 - MK 404 (EA. FACE)
3/4" THREADED INSERTS
MK 402
MK 501
MK 310 (EA. END)
MK 407
1 - MK 405 (EA. FACE)
MK 606
5 DETENSIONING PL.
1'-7"
3'-0"
END SECTION
PIPE SCREED SUPPORTS
MK 405
MK 310
MK 408
#3 BAR OR STRAND x 3'-0"± @ INSERT LOOP
14 - 1/2" ϕ 270 K. H.T.S.R. STRANDS
3/4" CHAMFER (TYP.)
1'-7"
MID-SPAN SECTION
NOTE: THREADED JACK INSERTS AND PIPE SCREED SUPPORTS ARE FURNISHED BY ROCKWIN & INSTALLED BY ROCKWIN PER THIS DWG.
SUPPLIER: W. F. MAXWELL CO.
H.R. MIX DESIGN NO. 11
ISSUED FOR CONSTRUCTION
ROCKWIN PRESTRESSED CONCRETE CORP.
1540 E. IMPERIAL HWY. SANTA FE SPRINGS, CALIF. 213/921-3561
PRESTRESSED I-GIRDER : G-3
APPROVAL
6-2-78

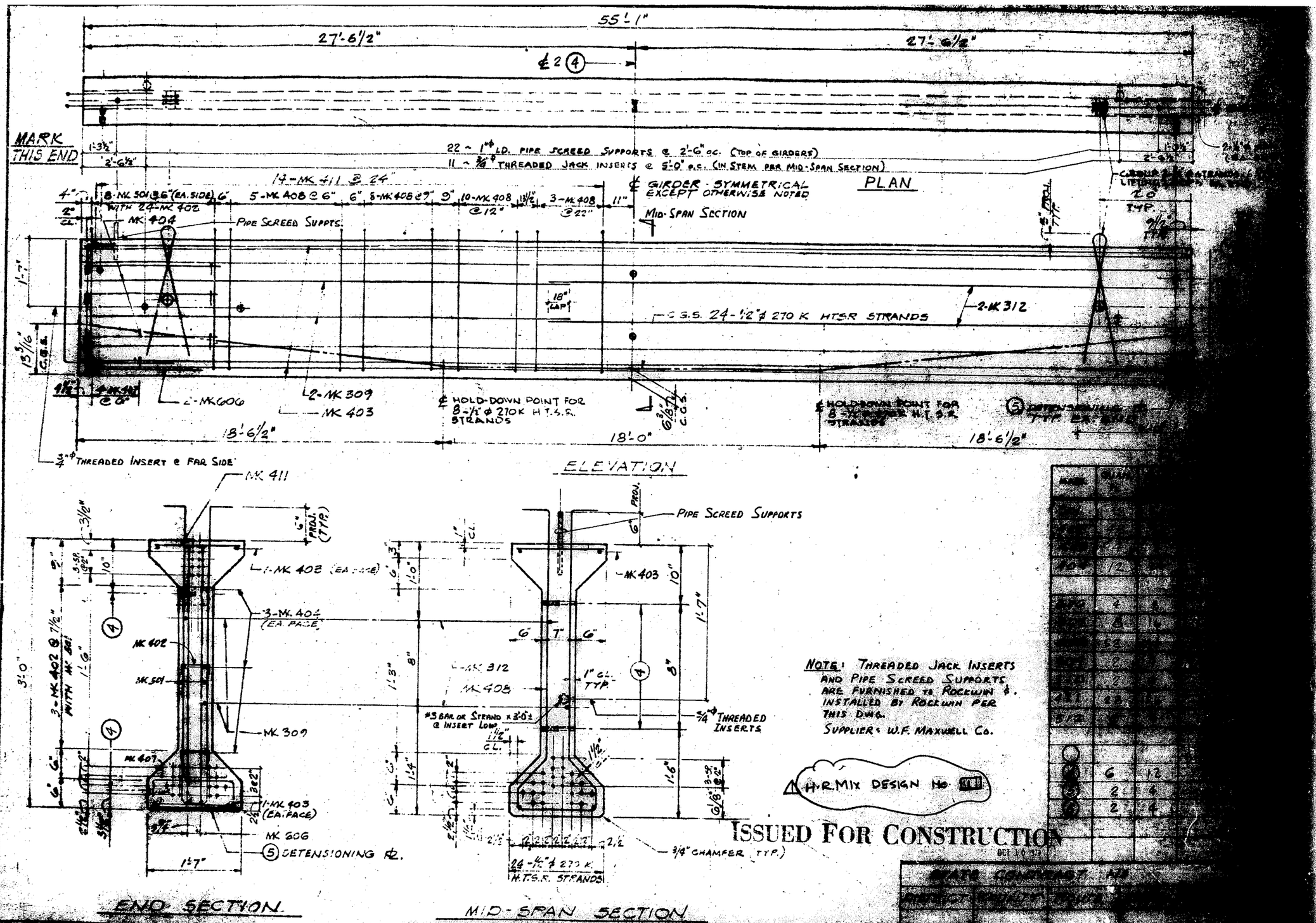

NOTE: THREADED JACK INSERTS AND PIPE SCREED SUPPORTS ARE FURNISHED TO ROCKWIN & INSTALLED BY ROCKWIN PER THIS DWG.
SUPPLIER: W.F. MAXWELL CO.

H.R. MIX DESIGN NO. [illegible]

ISSUED FOR CONSTRUCTION

MARK	QUAN.	
	12	
	4	4
	8	16
	52	
	2	
	12	
	52	
	6	12
	2	4
	2	4

STATE CONTRACT NO.

DWG. E-1
HARDROCK
4200
4200
6-12
12-24

ROCKWIN PRESTRESSED CONCRETE CORP.
12440 E. IMPERIAL HWY. - SANTA FE SPRINGS, CALIF. 213/921-3801

DWG TITLE
PRESTRESSED I-GIRDER: G-4
2-SPAN

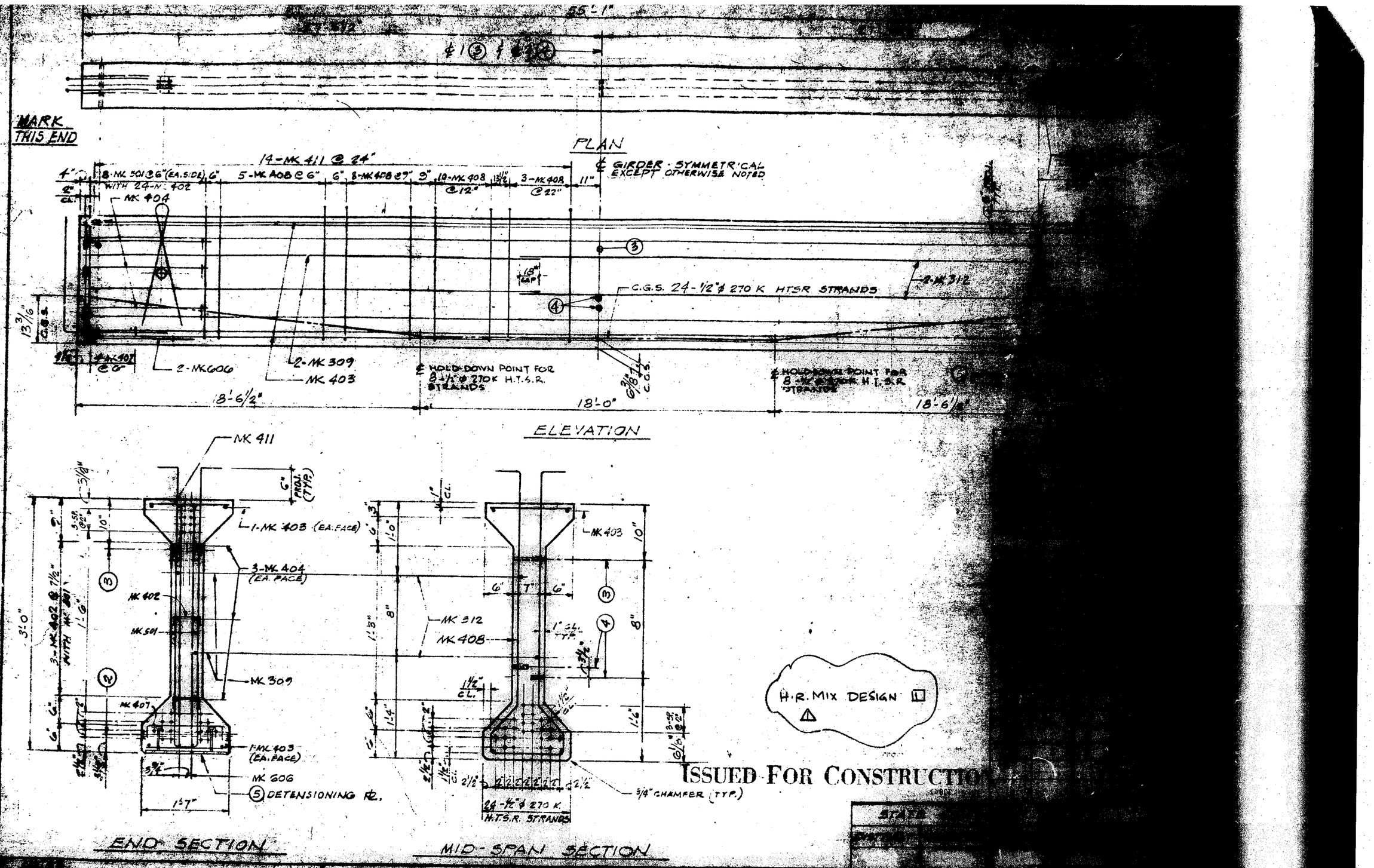
MARK THIS END
PLAN
℄ GIRDER - SYMMETRICAL EXCEPT OTHERWISE NOTED
14-MK 411 @ 24"
8-MK 501 @ 6" (EA. SIDE) WITH 24-MK 402
5-MK 408 @ 6"
8-MK 408 @ 9"
10-MK 408 @ 12"
3-MK 408 @ 22"
MK 404
C.G.S. 24-1/2"ϕ 270 K HTSR STRANDS
2-MK 312
2-MK 606
2-MK 309
MK 403
℄ HOLD-DOWN POINT FOR 8-1/2"ϕ 270K H.T.S.R. STRANDS
18'-6 1/2"
18'-0"
18'-6 1/2"
ELEVATION
MK 411
1-MK 403 (EA. FACE)
3-MK 404 (EA. FACE)
MK 402
MK 501
MK 309
MK 407
1-MK 403 (EA. FACE)
MK 606
5 DETENSIONING PL.
3'-0"
1'-7"
MK 403
MK 312
MK 408
24-1/2"ϕ 270 K H.T.S.R. STRANDS
3/4" CHAMFER (TYP.)
END SECTION
MID-SPAN SECTION
H.R. MIX DESIGN
ISSUED FOR CONSTRUCTION
ROCKWIN PRESTRESSED CONCRETE CORP.
PRESTRESSED I GIRDER : G-5

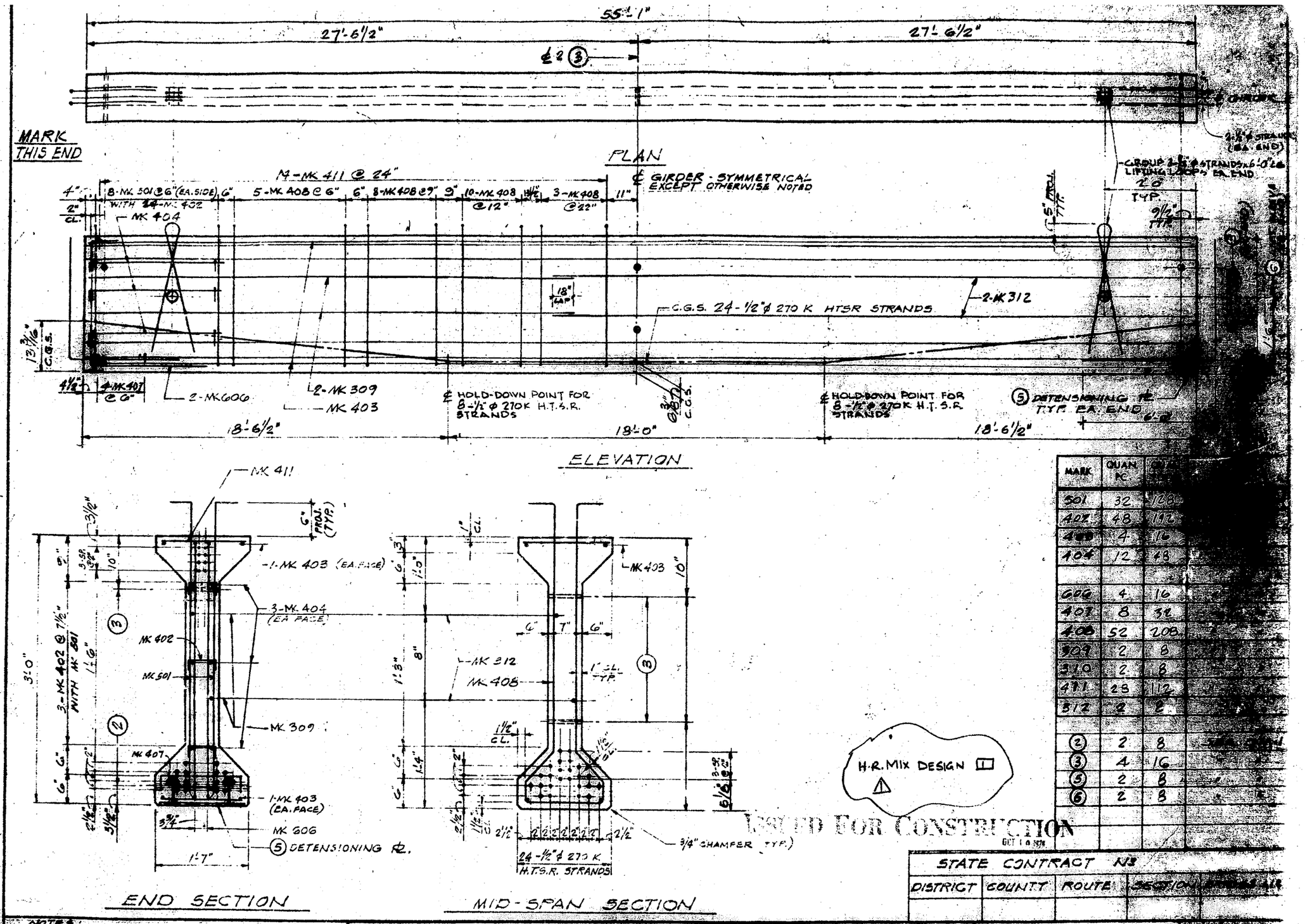

MARK	QUAN PC	
501	32	128
402	48	112
408	4	16
404	12	48
606	4	16
407	8	32
408	52	208
309	2	8
310	2	8
411	28	112
312	2	8
(2)	2	8
(3)	4	16
(5)	2	8
(6)	2	8

STATE CONTRACT NO.

DISTRICT	COUNTY	ROUTE	SECTION

NOTES:
1. FOR ERECTION PLAN SEE DWG. E-1
2. CONCRETE AGGREGATE = HARDROCK
3. f'ci @ TRANSFER = 4200 PSI
4. f'c @ 28 DAYS = 4200 PSI
5. CU. YDS. CONC. REQD. EA. = 6.12
6. STEEL ESTIMATED WT. EA. = 12.39 TONS
7. DESIGN & FOR STANDARD SPECIFICATIONS OF STATE OF CALIF. H.T.A. (TOP - SAND PLANT)
JACKING FORCE = 28.9

ROCKWIN PRESTRESSED CONCRETE CORP.
13440 E. IMPERIAL HWY. - SANTA FE SPRINGS, CALIF. 213/921-3561

DWG TITLE
PRESTRESSED I-GIRDER : G-6
4 - REQ'D.

APPROVAL
T.M. 6-2-78
CONSTRUCTION

PROJECT 7823
BEAR VALLEY CUTOFF
MAIN ST. TO TAMARISK AVE.
HESPERIA - CALIF.

G-6

APPENDIX E

LRFD Spread Footing Analysis

Project: Bear Valley
Project No. A9072-06-01
Date: January 17, 2017
Support: Abut 1 & 4 (Right)

Input:
Internally Calculated:

Service-I Limit State	Total Load, P_{Total} (kips):	469	From Structural Engineer
	Permanent Load, P_{Perm} (kips):	208	
Strength Limit State	Total Load, P_{Total} (kips):	616	
Extreme Limit State	Total Load, P_{Total} (kips):	N/A	

ϕ_b (Strength) =	0.45
ϕ_b (Extreme) =	1.0

	From Structural Engineer		B'x(L'/B')	From Bearing Capacity Spreadsheet	From Settlement Spreadsheet	$q_n \times \phi_b$ (Strength)	$q_n \times \phi_b$ (Extreme)	Service Total Load/(B'xL')		Strength Tot Load/(B'xL')		Extreme Tot Load/(B'xL')	
No.	Effective Footing Width	Effective Footing Size Ratio	Effective Footing Length	Gross Nominal Bearing Resistance	Permissible Net Contact Stress (Settlement)	Factored Gross Nominal Bearing Resistance (Strength)	Factored Gross Nominal Bearing Resistance (Extreme)	Service -I Net Bearing Stress	Check Service	Gross Uniform Bearing Stress (Strength)	Check Strength	Gross Uniform Bearing Stress (Extreme)	Check Extreme
	B' (ft)	L'/B'	L' (ft)	q_n (ksf)	q_{pn} (ksf)	q_R (ksf)	q_R (ksf)	q'_o (ksf)	$q'_o < q_{pn}$	q_o (ksf)	$q_o < q_R$	q_o (ksf)	$q_o < q_R$
1	8	1.66625	13.33	67.263	11.224	30.27	67.26	4.40	**OK**	5.78	**OK**	#VALUE!	**#VALUE!**
2						0.00	0.00	#DIV/0!	**#DIV/0!**	#DIV/0!	**#DIV/0!**	#VALUE!	**#VALUE!**
3						0.00	0.00	#DIV/0!	**#DIV/0!**	#DIV/0!	**#DIV/0!**	#VALUE!	**#VALUE!**
1						0.00	0.00	#DIV/0!	**#DIV/0!**	#DIV/0!	**#DIV/0!**	#VALUE!	**#VALUE!**
2						0.00	0.00	#DIV/0!	**#DIV/0!**	#DIV/0!	**#DIV/0!**	#VALUE!	**#VALUE!**
3						0.00	0.00	#DIV/0!	**#DIV/0!**	#DIV/0!	**#DIV/0!**	#VALUE!	**#VALUE!**
1						0.00	0.00	#DIV/0!	**#DIV/0!**	#DIV/0!	**#DIV/0!**	#VALUE!	**#VALUE!**
2						0.00	0.00	#DIV/0!	**#DIV/0!**	#DIV/0!	**#DIV/0!**	#VALUE!	**#VALUE!**
3						0.00	0.00	#DIV/0!	**#DIV/0!**	#DIV/0!	**#DIV/0!**	#VALUE!	**#VALUE!**

BEARING CAPACITY ANALYSIS

File No.: **A9072-06-01** Date: 1/18/2017
Job Name: **Bear Valley Road**

Comments: Abut 1 & 4 (Right)

Soil Data: **Input below**

c =	**320**	**BLUE**
ϕ =	**34**	
γ_t =	**125**	

Footing Dimensions		**Footing Type**
Length (L') =	**13.33**	**1**
Depth (D) =	**7**	**strip = 1, round = 2, square = 3**
Width (B') =	**8**	

Terzaghi (1943): Bearing Capacity

1

q_n = **67,263** PSF
33.6 TSF
3,220 kPa

Settlement by the Schmertmann Method (NAVFAC 7.1-220)									
Project Name:		Bear Valley Rd - Abut 1 & 4 (Right)							
Project Number:		A9072-06-01							
Footing Width, B (feet)=			8						
Embedment, D (feet)=			7						
Unit Weight of Soil, γ (pcf)=			125						
Net Pressure Increase , P (psf)=			11224.98652						
Net Pressure Increase , P (tsf)=			5.612493258						
Elapsed Time, t (Years)=			0.1						
Embedment Factor (C1)=			0.961	= 1-0.5*(Wγ/(P*2000))					
Creep Correction Factor (C2)=			1.000	= 1+0.2log(10t)					
	B*12/4			N*E_s/N	=6*Z/(2*5*W*12)	I*Z/Es			
Layer	Thickness, Z (Inches)	Soil Type	Density/ Consistency	E_s (tsf)	Influence Factor, I	I*Z/Es (Inches/tsf)			
1	24	SM	Medium Dense	250	0.15	0.014			
2	24	SM	Medium Dense	250	0.45	0.043			
3	24	SM	Medium Dense	250	0.55	0.053			
4	24	SM	Dense	400	0.45	0.027			
5	24	SM	Dense	400	0.35	0.021			
6	24	SM	Dense	400	0.25	0.015			
7	24	SM	Dense	400	0.15	0.009			
8	24	SM	Dense	400	0.05	0.003			
	192	= Total Thickness (Inches)			SUM =	0.185	in/tsf		
	16	= Total Thickness (Feet)				0.093	in/ksf		
Settlement=SUM*Net Pressure Increase*C1*C2=				1.000	inches				

Soil Type	Density/ Consistency	E_s (Bowles 1988), tsf
Clay	Very Soft	25 - 125
	Soft	50 - 250
	Medium	150 - 500
	Hard	500 - 1000
	Sandy	250 - 2500
Sand	Silty	125 - 225
	Loose	100 - 250
	Dense	500 - 850
Sand & Gravel	Loose	500 - 1500
	Dense	1000 - 2000
Silt		20 - 200

Settlement by the Schmertmann Method (NAVFAC 7.1-220)									
Project Name:		Bear Valley Rd - Abut 1 & 4 (Right)							
Project Number:		A9072-06-01							
Footing Width, B (feet)=			8						
Embedment, D (feet)=			7						
Unit Weight of Soil, γ (pcf)=			125						
Net Pressure Increase , P (psf)=			17104.16667						
Net Pressure Increase , P (tsf)=			8.552083333						
Elapsed Time, t (Years)=			0.1						
Embedment Factor (C1)=			0.974	= 1-0.5*(Wγ/(P*2000))					
Creep Correction Factor (C2)=			1.000	= 1+0.2log(10t)					
	B*12/4			N*E_s/N	=6*Z/(2*5*W*12)	I*Z/Es			
Layer	Thickness, Z (Inches)	Soil Type	Density/ Consistency	E_s (tsf)	Influence Factor, I	I*Z/Es (Inches/tsf)			
1	24	SM	Dense	400	0.15	0.009			
2	24	SM	Very Dense	600	0.45	0.018			
3	24	SM	Dense	400	0.55	0.033			
4	24	SM	Dense	400	0.45	0.027			
5	24	SM	Very Dense	600	0.35	0.014			
6	24	SM	Very Dense	600	0.25	0.010			
7	24	SM	Very Dense	600	0.15	0.006			
8	24	SM	Dense	400	0.05	0.003			
	192	= Total Thickness (Inches)			SUM =	0.120	in/tsf		
	16	= Total Thickness (Feet)				0.060	in/ksf		
Settlement=SUM*Net Pressure Increase*C1*C2=				1.000	inches				

Soil Type	Density/ Consistency	E_s (Bowles 1988), tsf
Clay	Very Soft	25 - 125
	Soft	50 - 250
	Medium	150 - 500
	Hard	500 - 1000
	Sandy	250 - 2500
Sand	Silty	125 - 225
	Loose	100 - 250
	Dense	500 - 850
Sand & Gravel	Loose	500 - 1500
	Dense	1000 - 2000
Silt		20 - 200

LRFD Spread Footing Analysis

Project: Bear Valley
Project No. A9072-06-01
Date: January 17, 2017
Support: Bent 2 & 3 (Right)

Input:
Internally Calculated:

Service-I Limit State	Total Load, P_{Total} (kips):	614
	Permanent Load, P_{Perm} (kips):	472
Strength Limit State	Total Load, P_{Total} (kips):	840
Extreme Limit State	Total Load, P_{Total} (kips):	472

From Structural Engineer

ϕ_b (Strength) =	0.45
ϕ_b (Extreme) =	1.0

	From Structural Engineer		B'x(L'/B')	From Bearing Capacity Spreadsheet	From Settlement Spreadsheet	$q_n \times \phi_b$ (Strength)	$q_n \times \phi_b$ (Extreme)	Service Total Load/(B'xL')		Strength Tot Load/(B'xL')		Extreme Tot Load/(B'xL')	
No.	Effective Footing Width	Effective Footing Size Ratio	Effective Footing Length	Gross Nominal Bearing Resistance	Permissible Net Contact Stress (Settlement)	Factored Gross Nominal Bearing Resistance (Strength)	Factored Gross Nominal Bearing Resistance (Extreme)	Service -I Net Bearing Stress	Check Service	Gross Uniform Bearing Stress (Strength)	Check Strength	Gross Uniform Bearing Stress (Extreme)	Check Extreme
	B' (ft)	L'/B'	L' (ft)	q_n (ksf)	q_{pn} (ksf)	q_R (ksf)	q_R (ksf)	q'_o (ksf)	$q'_o < q_{pn}$	q_o (ksf)	$q_o < q_R$	q_o (ksf)	$q_o < q_R$
1	12.5	1.1336	14.17	44.769	7.906	20.15	44.77	3.47	**OK**	4.74	**OK**	2.66	**OK**
2						0.00	0.00	#DIV/0!	**#DIV/0!**	#DIV/0!	**#DIV/0!**	#DIV/0!	**#DIV/0!**
3						0.00	0.00	#DIV/0!	**#DIV/0!**	#DIV/0!	**#DIV/0!**	#DIV/0!	**#DIV/0!**
1						0.00	0.00	#DIV/0!	**#DIV/0!**	#DIV/0!	**#DIV/0!**	#DIV/0!	**#DIV/0!**
2						0.00	0.00	#DIV/0!	**#DIV/0!**	#DIV/0!	**#DIV/0!**	#DIV/0!	**#DIV/0!**
3						0.00	0.00	#DIV/0!	**#DIV/0!**	#DIV/0!	**#DIV/0!**	#DIV/0!	**#DIV/0!**
1						0.00	0.00	#DIV/0!	**#DIV/0!**	#DIV/0!	**#DIV/0!**	#DIV/0!	**#DIV/0!**
2						0.00	0.00	#DIV/0!	**#DIV/0!**	#DIV/0!	**#DIV/0!**	#DIV/0!	**#DIV/0!**
3						0.00	0.00	#DIV/0!	**#DIV/0!**	#DIV/0!	**#DIV/0!**	#DIV/0!	**#DIV/0!**

BEARING CAPACITY ANALYSIS

File No.: **A9072-06-01** Date: 1/18/2017
Job Name: **Bear Valley Road**

Comments: Bent 2 & 3 (Right)

Soil Data: **Input below**

c =	**500**	**BLUE**
ϕ =	**27**	
γ_t =	**125**	

Footing Dimensions		**Footing Type**
Length (L') =	**14.17**	**1**
Depth (D) =	**10**	**strip = 1, round = 2, square = 3**
Width (B') =	**12.5**	

Terzaghi (1943): Bearing Capacity

1

q_n =	**44,769**	PSF
	22.4	TSF
	2,143	kPa

Settlement by the Schmertmann Method (NAVFAC 7.1-220)									
Project Name:		Bear Valley Rd - Bent 2 & 3 (Right)							
Project Number:		A9072-06-01							
Footing Width, B (feet)=			12.5						
Embedment, D (feet)=			10						
Unit Weight of Soil, γ (pcf)=			125						
Net Pressure Increase , P (psf)=			7906.001138						
Net Pressure Increase , P (tsf)=			3.953000569						
Elapsed Time, t (Years)=			0.1						
Embedment Factor (C1)=			0.921	= 1-0.5*(Wγ/(P*2000))					
Creep Correction Factor (C2)=			1.000	= 1+0.2log(10t)					
	B*12/4			N*E_s/N	=6*Z/(2*5*W*12)	I*Z/Es			
Layer	Thickness, Z (Inches)	Soil Type	Density/ Consistency	E_s (tsf)	Influence Factor, I	I*Z/Es (Inches/tsf)			
1	37.5	SP	Loose	175	0.15	0.032			
2	37.5	SP	Medium Dense	250	0.45	0.068			
3	37.5	SP	Medium Dense	250	0.55	0.083			
4	37.5	SW	Dense	400	0.45	0.042			
5	37.5	CL	Very Stiff	500	0.35	0.026			
6	37.5	SP	Very Dense	700	0.25	0.013			
7	37.5	SP	Very Dense	700	0.15	0.008			
8	37.5	SP	Very Dense	700	0.05	0.003			
	300	= Total Thickness (Inches)			SUM =	0.275	in/tsf		
	25	= Total Thickness (Feet)				0.137	in/ksf		
Settlement=SUM*Net Pressure Increase*C1*C2=				1.000	inches				

Soil Type	Density/ Consistency	E_s (Bowles 1988), tsf
Clay	Very Soft	25 - 125
	Soft	50 - 250
	Medium	150 - 500
	Hard	500 - 1000
	Sandy	250 - 2500
Sand	Silty	125 - 225
	Loose	100 - 250
	Dense	500 - 850
Sand & Gravel	Loose	500 - 1500
	Dense	1000 - 2000
Silt		20 - 200

Settlement by the Schmertmann Method (NAVFAC 7.1-220)									
Project Name:		Bear Valley Rd - Bent 2 & 3 (Right)							
Project Number:		A9072-06-01							
Footing Width, B (feet)=			12.5						
Embedment, D (feet)=			10						
Unit Weight of Soil, γ (pcf)=			125						
Net Pressure Increase , P (psf)=			15484.03814						
Net Pressure Increase , P (tsf)=			7.742019071						
Elapsed Time, t (Years)=			0.1						
Embedment Factor (C1)=			0.960	= 1-0.5*(Wγ/(P*2000))					
Creep Correction Factor (C2)=			1.000	= 1+0.2log(10t)					
	B*12/4			N*E_s/N	=6*Z/(2*5*W*12)	I*Z/Es			
Layer	Thickness, Z (Inches)	Soil Type	Density/ Consistency	E_s (tsf)	Influence Factor, I	I*Z/Es (Inches/tsf)			
1	37.5	CL	Stiff	400	0.15	0.014			
2	37.5	SP	Very Dense	700	0.45	0.024			
3	37.5	SP	Very Dense	700	0.55	0.029			
4	37.5	SP	Very Dense	700	0.45	0.024			
5	37.5	SP	Very Dense	700	0.35	0.019			
6	37.5	SP/G	Very Dense	700	0.25	0.013			
7	37.5	SP	Very Dense	700	0.15	0.008			
8	37.5	SP/G	Very Dense	700	0.05	0.003			
	300	= Total Thickness (Inches)			SUM =	0.135	in/tsf		
	25	= Total Thickness (Feet)				0.067	in/ksf		
Settlement=SUM*Net Pressure Increase*C1*C2=				1.000	inches				

Soil Type	Density/ Consistency	E_s (Bowles 1988), tsf
Clay	Very Soft	25 - 125
	Soft	50 - 250
	Medium	150 - 500
	Hard	500 - 1000
	Sandy	250 - 2500
Sand	Silty	125 - 225
	Loose	100 - 250
	Dense	500 - 850
Sand & Gravel	Loose	500 - 1500
	Dense	1000 - 2000
Silt		20 - 200

LRFD Spread Footing Analysis

Project: Bear Valley
Project No. A9072-06-01
Date: January 17, 2018
Support: Abut 1 & 4 (Left)

Input:
Internally Calculated:

Service-I Limit State	Total Load, P_{Total} (kips):	580	From Structural Engineer
	Permanent Load, P_{Perm} (kips):	272	
Strength Limit State	Total Load, P_{Total} (kips):	761	
Extreme Limit State	Total Load, P_{Total} (kips):	N/A	

ϕ_b (Strength) =	0.45
ϕ_b (Extreme) =	1.0

	From Structural Engineer		B'x(L'/B')	From Bearing Capacity Spreadsheet	From Settlement Spreadsheet	$q_n \times \phi_b$ (Strength)	$q_n \times \phi_b$ (Extreme)	Service Total Load/(B'xL')		Strength Tot Load/(B'xL')		Extreme Tot Load/(B'xL')	
No.	Effective Footing Width	Effective Footing Size Ratio	Effective Footing Length	Gross Nominal Bearing Resistance	Permissible Net Contact Stress (Settlement)	Factored Gross Nominal Bearing Resistance (Strength)	Factored Gross Nominal Bearing Resistance (Extreme)	Service -I Net Bearing Stress	Check Service	Gross Uniform Bearing Stress (Strength)	Check Strength	Gross Uniform Bearing Stress (Extreme)	Check Extreme
	B' (ft)	L'/B'	L' (ft)	q_n (ksf)	q_{pn} (ksf)	q_R (ksf)	q_R (ksf)	q'_o (ksf)	$q'_o < q_{pn}$	q_o (ksf)	$q_o < q_R$	q_o (ksf)	$q_o < q_R$
1	8	2.6375	21.1	67.263	11.224	30.27	67.26	3.44	**OK**	4.51	**OK**	#VALUE!	**#VALUE!**
2						0.00	0.00	#DIV/0!	**#DIV/0!**	#DIV/0!	**#DIV/0!**	#VALUE!	**#VALUE!**
3						0.00	0.00	#DIV/0!	**#DIV/0!**	#DIV/0!	**#DIV/0!**	#VALUE!	**#VALUE!**
1						0.00	0.00	#DIV/0!	**#DIV/0!**	#DIV/0!	**#DIV/0!**	#VALUE!	**#VALUE!**
2						0.00	0.00	#DIV/0!	**#DIV/0!**	#DIV/0!	**#DIV/0!**	#VALUE!	**#VALUE!**
3						0.00	0.00	#DIV/0!	**#DIV/0!**	#DIV/0!	**#DIV/0!**	#VALUE!	**#VALUE!**
1						0.00	0.00	#DIV/0!	**#DIV/0!**	#DIV/0!	**#DIV/0!**	#VALUE!	**#VALUE!**
2						0.00	0.00	#DIV/0!	**#DIV/0!**	#DIV/0!	**#DIV/0!**	#VALUE!	**#VALUE!**
3						0.00	0.00	#DIV/0!	**#DIV/0!**	#DIV/0!	**#DIV/0!**	#VALUE!	**#VALUE!**

BEARING CAPACITY ANALYSIS

File No.: **A9072-06-01** Date: 1/18/2017
Job Name: **Bear Valley Road**

Comments: Abut 1 & 4 (Left)

Soil Data: **Input below**

c =	**320**	**BLUE**
ϕ =	**34**	
γ_t =	**125**	

Footing Dimensions		**Footing Type**
Length (L') =	**21.1**	**1**
Depth (D) =	**7**	**strip = 1, round = 2, square = 3**
Width (B') =	**8**	

Terzaghi (1943): Bearing Capacity

1

q_n = **67,263** PSF
33.6 TSF
3,220 kPa

Settlement by the Schmertmann Method (NAVFAC 7.1-220)								
Project Name:		Bear Valley Rd - Abut 1 & 4 (Left)						
Project Number:		A9072-06-01						
Footing Width, B (feet)=			8					
Embedment, D (feet)=			7					
Unit Weight of Soil, γ (pcf)=			125					
Net Pressure Increase , P (psf)=			11224.98652					
Net Pressure Increase , P (tsf)=			5.612493258					
Elapsed Time, t (Years)=			0.1					
Embedment Factor (C1)=			0.961	= 1-0.5*(Wγ/(P*2000))				
Creep Correction Factor (C2)=			1.000	= 1+0.2log(10t)				
	B*12/4			N*E_s/N	=6*Z/(2*5*W*12)	I*Z/Es		
Layer	Thickness, Z (Inches)	Soil Type	Density/ Consistency	E_s (tsf)	Influence Factor, I	I*Z/Es (Inches/tsf)		
1	24	SM	Medium Dense	250	0.15	0.014		
2	24	SM	Medium Dense	250	0.45	0.043		
3	24	SM	Medium Dense	250	0.55	0.053		
4	24	SM	Dense	400	0.45	0.027		
5	24	SM	Dense	400	0.35	0.021		
6	24	SM	Dense	400	0.25	0.015		
7	24	SM	Dense	400	0.15	0.009		
8	24	SM	Dense	400	0.05	0.003		
	192	= Total Thickness (Inches)			SUM =	0.185	in/tsf	
	16	= Total Thickness (Feet)				0.093	in/ksf	
Settlement=SUM*Net Pressure Increase*C1*C2=				1.000	inches			

Soil Type	Density/ Consistency	E_s (Bowles 1988), tsf
Clay	Very Soft	25 - 125
	Soft	50 - 250
	Medium	150 - 500
	Hard	500 - 1000
	Sandy	250 - 2500
Sand	Silty	125 - 225
	Loose	100 - 250
	Dense	500 - 850
Sand & Gravel	Loose	500 - 1500
	Dense	1000 - 2000
Silt		20 - 200

Settlement by the Schmertmann Method (NAVFAC 7.1-220)									
Project Name:		Bear Valley Rd - Abut 1 & 4 (Left)							
Project Number:		A9072-06-01							
Footing Width, B (feet)=			8						
Embedment, D (feet)=			7						
Unit Weight of Soil, γ (pcf)=			125						
Net Pressure Increase , P (psf)=			17104.16667						
Net Pressure Increase , P (tsf)=			8.552083333						
Elapsed Time, t (Years)=			0.1						
Embedment Factor (C1)=			0.974	= 1-0.5*(Wγ/(P*2000))					
Creep Correction Factor (C2)=			1.000	= 1+0.2log(10t)					
	B*12/4			N*E_s/N	=6*Z/(2*5*W*12)	I*Z/Es			
Layer	Thickness, Z (Inches)	Soil Type	Density/ Consistency	E_s (tsf)	Influence Factor, I	I*Z/Es (Inches/tsf)			
1	24	SM	Dense	400	0.15	0.009			
2	24	SM	Very Dense	600	0.45	0.018			
3	24	SM	Dense	400	0.55	0.033			
4	24	SM	Dense	400	0.45	0.027			
5	24	SM	Very Dense	600	0.35	0.014			
6	24	SM	Very Dense	600	0.25	0.010			
7	24	SM	Very Dense	600	0.15	0.006			
8	24	SM	Dense	400	0.05	0.003			
	192	= Total Thickness (Inches)			SUM =	0.120	in/tsf		
	16	= Total Thickness (Feet)				0.060	in/ksf		
Settlement=SUM*Net Pressure Increase*C1*C2=				1.000	inches				

Soil Type	Density/ Consistency	E_s (Bowles 1988), tsf
Clay	Very Soft	25 - 125
	Soft	50 - 250
	Medium	150 - 500
	Hard	500 - 1000
	Sandy	250 - 2500
Sand	Silty	125 - 225
	Loose	100 - 250
	Dense	500 - 850
Sand & Gravel	Loose	500 - 1500
	Dense	1000 - 2000
Silt		20 - 200

LRFD Spread Footing Analysis

Project: Bear Valley
Project No. A9072-06-01
Date: January 17, 2017
Support: Bent 2 & 3 (Left)

Input:
Internally Calculated:

Service-I Limit State	Total Load, P_{Total} (kips):	818	From Structural Engineer
	Permanent Load, P_{Perm} (kips):	676	
Strength Limit State	Total Load, P_{Total} (kips):	1098	
Extreme Limit State	Total Load, P_{Total} (kips):	676	

ϕ_b (Strength) =	0.45
ϕ_b (Extreme) =	1.0

	From Structural Engineer		B'x(L'/B')	From Bearing Capacity Spreadsheet	From Settlement Spreadsheet	$q_n \times \phi_b$ (Strength)	$q_n \times \phi_b$ (Extreme)	Service Total Load/(B'xL')		Strength Tot Load/(B'xL')		Extreme Tot Load/(B'xL')	
No.	Effective Footing Width	Effective Footing Size Ratio	Effective Footing Length	Gross Nominal Bearing Resistance	Permissible Net Contact Stress (Settlement)	Factored Gross Nominal Bearing Resistance (Strength)	Factored Gross Nominal Bearing Resistance (Extreme)	Service -I Net Bearing Stress	Check Service	Gross Uniform Bearing Stress (Strength)	Check Strength	Gross Uniform Bearing Stress (Extreme)	Check Extreme
	B' (ft)	L'/B'	L' (ft)	q_n (ksf)	q_{pn} (ksf)	q_R (ksf)	q_R (ksf)	q'_o (ksf)	$q'_o < q_{pn}$	q_o (ksf)	$q_o < q_R$	q_o (ksf)	$q_o < q_R$
1	12.5	1.76	22	44.769	7.906	20.15	44.77	2.97	**OK**	3.99	**OK**	2.46	**OK**
2						0.00	0.00	#DIV/0!	**#DIV/0!**	#DIV/0!	**#DIV/0!**	#DIV/0!	**#DIV/0!**
3						0.00	0.00	#DIV/0!	**#DIV/0!**	#DIV/0!	**#DIV/0!**	#DIV/0!	**#DIV/0!**
1						0.00	0.00	#DIV/0!	**#DIV/0!**	#DIV/0!	**#DIV/0!**	#DIV/0!	**#DIV/0!**
2						0.00	0.00	#DIV/0!	**#DIV/0!**	#DIV/0!	**#DIV/0!**	#DIV/0!	**#DIV/0!**
3						0.00	0.00	#DIV/0!	**#DIV/0!**	#DIV/0!	**#DIV/0!**	#DIV/0!	**#DIV/0!**
1						0.00	0.00	#DIV/0!	**#DIV/0!**	#DIV/0!	**#DIV/0!**	#DIV/0!	**#DIV/0!**
2						0.00	0.00	#DIV/0!	**#DIV/0!**	#DIV/0!	**#DIV/0!**	#DIV/0!	**#DIV/0!**
3						0.00	0.00	#DIV/0!	**#DIV/0!**	#DIV/0!	**#DIV/0!**	#DIV/0!	**#DIV/0!**

BEARING CAPACITY ANALYSIS

File No.: **A9072-06-01** Date: 1/18/2017
Job Name: **Bear Valley Road**

Comments: Bent 2 & 3 (Left)

Soil Data: **Input below**

c =	**500**	**BLUE**
ϕ =	**27**	
γ_t =	**125**	

Footing Dimensions		**Footing Type**
Length (L') =	**22**	**1**
Depth (D) =	**10**	**strip = 1, round = 2, square = 3**
Width (B') =	**12.5**	

Terzaghi (1943): Bearing Capacity

1

q_n =	**44,769**	PSF
	22.4	TSF
	2,143	kPa

Settlement by the Schmertmann Method (NAVFAC 7.1-220)									
Project Name:		Bear Valley Rd - Bent 2 & 3 (Left)							
Project Number:		A9072-06-01							
Footing Width, B (feet)=			12.5						
Embedment, D (feet)=			10						
Unit Weight of Soil, γ (pcf)=			125						
Net Pressure Increase , P (psf)=			7906.001138						
Net Pressure Increase , P (tsf)=			3.953000569						
Elapsed Time, t (Years)=			0.1						
Embedment Factor (C1)=			0.921	= 1-0.5*(Wγ/(P*2000))					
Creep Correction Factor (C2)=			1.000	= 1+0.2log(10t)					
	B*12/4			N*E_s/N	=6*Z/(2*5*W*12)	I*Z/Es			
Layer	Thickness, Z (Inches)	Soil Type	Density/ Consistency	E_s (tsf)	Influence Factor, I	I*Z/Es (Inches/tsf)			
1	37.5	SP	Loose	175	0.15	0.032			
2	37.5	SP	Medium Dense	250	0.45	0.068			
3	37.5	SP	Medium Dense	250	0.55	0.083			
4	37.5	SW	Dense	400	0.45	0.042			
5	37.5	CL	Very Stiff	500	0.35	0.026			
6	37.5	SP	Very Dense	700	0.25	0.013			
7	37.5	SP	Very Dense	700	0.15	0.008			
8	37.5	SP	Very Dense	700	0.05	0.003			
	300	= Total Thickness (Inches)			SUM =	0.275	in/tsf		
	25	= Total Thickness (Feet)				0.137	in/ksf		
Settlement=SUM*Net Pressure Increase*C1*C2=				1.000	inches				

Soil Type	Density/ Consistency	E_s (Bowles 1988), tsf
Clay	Very Soft	25 - 125
	Soft	50 - 250
	Medium	150 - 500
	Hard	500 - 1000
	Sandy	250 - 2500
Sand	Silty	125 - 225
	Loose	100 - 250
	Dense	500 - 850
Sand & Gravel	Loose	500 - 1500
	Dense	1000 - 2000
Silt		20 - 200

Settlement by the Schmertmann Method (NAVFAC 7.1-220)									
Project Name:		Bear Valley Rd - Bent 2 & 3 (Left)							
Project Number:		A9072-06-01							
Footing Width, B (feet)=			12.5						
Embedment, D (feet)=			10						
Unit Weight of Soil, γ (pcf)=			125						
Net Pressure Increase , P (psf)=			15484.03814						
Net Pressure Increase , P (tsf)=			7.742019071						
Elapsed Time, t (Years)=			0.1						
Embedment Factor (C1)=			0.960	= 1-0.5*(Wγ/(P*2000))					
Creep Correction Factor (C2)=			1.000	= 1+0.2log(10t)					
	B*12/4			N*E_s/N	=6*Z/(2*5*W*12)	I*Z/Es			
Layer	Thickness, Z (Inches)	Soil Type	Density/ Consistency	E_s (tsf)	Influence Factor, I	I*Z/Es (Inches/tsf)			
1	37.5	CL	Stiff	400	0.15	0.014			
2	37.5	SP	Very Dense	700	0.45	0.024			
3	37.5	SP	Very Dense	700	0.55	0.029			
4	37.5	SP	Very Dense	700	0.45	0.024			
5	37.5	SP	Very Dense	700	0.35	0.019			
6	37.5	SP/G	Very Dense	700	0.25	0.013			
7	37.5	SP	Very Dense	700	0.15	0.008			
8	37.5	SP/G	Very Dense	700	0.05	0.003			
	300	= Total Thickness (Inches)			SUM =	0.135	in/tsf		
	25	= Total Thickness (Feet)				0.067	in/ksf		
Settlement=SUM*Net Pressure Increase*C1*C2=				1.000	inches				

Soil Type	Density/ Consistency	E_s (Bowles 1988), tsf
Clay	Very Soft	25 - 125
	Soft	50 - 250
	Medium	150 - 500
	Hard	500 - 1000
	Sandy	250 - 2500
Sand	Silty	125 - 225
	Loose	100 - 250
	Dense	500 - 850
Sand & Gravel	Loose	500 - 1500
	Dense	1000 - 2000
Silt		20 - 200

Bear Valley – Asbestos and Deteriorated Lead-Containing Paint Survey Report (ACM LCP Report 021717)

ASBESTOS AND DETERIORATED LEAD-CONTAINING PAINT SURVEY REPORT

BEAR VALLEY ROAD OVERHEAD AT BNSF RAILROAD
VICTORVILLE, CALIFORNIA

PREPARED FOR:
DOKKEN ENGINEERING
110 BLUE RAVINE ROAD, SUITE 200
FOLSOM, CALIFORNIA 95630

PREPARED BY:
GEOCON WEST, INC.
3303 N. SAN FERNANDO BOULEVARD, SUITE 100
BURBANK, CA 91504-2531

GEOCON PROJECT NO. A9072-06-01

FEBRUARY 2017

Project No. A9072-06-01
February 17, 2017

Mr. Kris Kofoed, PE
Dokken Engineering
110 Blue Ravine Road, Suite 200
Folsom, California 95630

Subject: ASBESTOS AND DETERIORATED LEAD-CONTAINING PAINT SURVEY REPORT
BEAR VALLEY ROAD OVERHEAD AT BNSF RAILROAD
BRIDGE REHABILITATION AND WIDENING
VICTORVILLE, CALIFORNIA

Dear Mr. Kofoed:

In accordance with your request, we have performed an asbestos and deteriorated lead-containing paint (LCP) survey in conjunction with the upcoming rehabilitation and widening project at the Bear Valley Road Bridge over the BNSF Railroad in Victorville, California. Our scope of services included surveying the bridge for suspect asbestos-containing materials and deteriorated LCP, collecting bulk samples, and submitting the samples to laboratories for analyses.

The accompanying report summarizes the services performed and the results of laboratory testing.

If there are questions concerning the contents of this report, or if we may be of further service, please contact us at your convenience.

Sincerely,

GEOCON WEST, INC.

Scott M. Nunes, CAC (No. 92-0547)
Senior Environmental Scientist

(2) Addressee

TABLE OF CONTENTS

ASBESTOS AND DETERIORATED LEAD-CONTAINING PAINT SURVEY REPORT Page

1.0 INTRODUCTION 1
- 1.1 Site Description 1
- 1.2 Objectives 1

2.0 BACKGROUND 1
- 2.1 Asbestos 1
- 2.2 Lead Paint 2

3.0 SCOPE OF SERVICES 3
- 3.1 Asbestos 3
- 3.2 Lead Paint 4

4.0 INVESTIGATIVE RESULTS 5
- 4.1 Asbestos Results 5
- 4.2 Paint Results 5

5.0 CONCLUSIONS AND RECOMMENDATIONS 5
- 5.1 Asbestos 5
- 5.2 Lead Paint 5

6.0 REPORT LIMITATIONS 6

FIGURES
1. Vicinity Map
2. Site Plan

SITE PHOTOGRAPHS (1 through 10)

TABLES
1. Summary of Analytical Laboratory Test Results – Asbestos
2. Summary of Analytical Laboratory Test Results – Paint

APPENDIX
A. Laboratory Reports and Chain-of-Custody Documentation

ASBESTOS AND DETERIORATED LEAD-CONTAINING PAINT SURVEY REPORT

1.0 INTRODUCTION

1.1 Site Description

The Site consists of the Bear Valley Road Bridge over the BNSF Railroad in Victorville, California. The approximate site location is depicted on the Vicinity Map, Figure 1, and Site Plan, Figure 2.

1.2 Objectives

The objectives of our scope of services were to assess the potential presence and quantity of asbestos and deteriorated lead-containing paint (LCP) at the Site prior to planned renovation activities on the bridge. The information obtained from this investigation will be used by Dokken Engineering for waste profiling, determining California Occupational Safety and Health Administration (Cal/OSHA) applicability, and coordinating asbestos and LCP disturbance activities.

> *It was <u>not</u> Geocon's intent during this inspection to conduct an evaluation of lead-based paint hazards in accordance with United States Department of Housing and Urban Development (HUD) guidelines.*

2.0 BACKGROUND

2.1 Asbestos

The *Code of Federal Regulations (CFR),* 40 CFR 61, Subpart M, National Emissions Standards for Hazardous Air Pollutants (NESHAP) and Federal Occupational Safety and Health Administration (FED OSHA) classify asbestos-containing material (ACM) as any material or product that contains *more than* 1% asbestos. Nonfriable ACM is classified by NESHAP as either Category I or Category II material defined as follows:

- **Category I** – asbestos-containing packings, gaskets, resilient floor coverings, and asphalt roofing products.
- **Category II** – all remaining types of non-friable asbestos-containing material not included in Category I that when dry, cannot be crumbled, pulverized, or reduced to powder by hand pressure.

Regulated asbestos-containing material (RACM), a California hazardous waste when friable, is classified as any manufactured material that contains *greater than* 1% asbestos by dry weight *and* is:

- Friable; or
- Category I material that has become friable; or
- Category I material that has been subjected to sanding grinding, cutting or abrading; or
- Category II non-friable material that has a high probability of becoming crumbled, pulverized, or reduced to a powder during demolition or renovation activities.

Activities that disturb materials containing *any* amount of asbestos are subject to certain requirements of the Cal/OSHA asbestos standard contained in Title 8, California Code of Regulations (CCR) Section 1529. Typically, removal or disturbance of more than 100 square feet of material containing more than 0.1% asbestos must be performed by a registered asbestos abatement contractor, but associated waste labeling is not required if the material contains 1% or less asbestos. When the asbestos content of a material exceeds 1%, virtually all requirements of the standard become effective.

Materials containing more than 1% asbestos are also subject to NESHAP regulations (40 CFR Part 61, Subpart M). RACM (friable ACM and nonfriable ACM that will become friable during demolition or renovation operations) must be removed from buildings prior to demolition or renovation. Certain nonfriable ACM and materials containing 1% or less asbestos may remain in buildings during demolition; however, there are waste handling/disposal issues and Cal/OSHA work requirements that must be followed. Contractors are responsible for segregating and characterizing waste streams prior to disposal.

With respect to potential worker exposure, notification, and registration requirements, Cal/OSHA defines asbestos-containing construction material (ACCM) as construction material that contains more than 0.1% asbestos (Title 8, CCR 341.6).

2.2 Lead Paint

Construction activities (including demolition) that disturb materials or paints containing *any* amount of lead are subject to certain requirements of the Cal/OSHA lead standard contained in Title 8, CCR, Section 1532.1. Deteriorated paint is defined by Title 17, CCR, Division 1, Chapter 8, §35022 as a surface coating that is cracking, chalking, flaking, chipping, peeling, non-intact, failed, or otherwise separating from a component. Demolition of a deteriorated LCP component would require waste characterization and appropriate disposal. Intact LCP on a component is currently accepted by most landfills and recycling facilities; however, contractors are responsible for segregating and characterizing waste streams prior to disposal.

For a solid waste containing lead, the waste is classified as California hazardous when: 1) the representative total lead content equals or exceeds the respective Total Threshold Limit Concentration (TTLC) of 1,000 milligrams per kilogram (mg/kg); or 2) the representative soluble lead content equals or exceeds the respective Soluble Threshold Limit Concentration (STLC) of 5 milligrams per liter (mg/l) based on the standard Waste Extraction Test (WET). A waste has the potential for exceeding the lead STLC when the waste's representative total lead content is greater than or equal to ten times the respective STLC value since the WET uses a 1:10 dilution ratio. Hence, when total lead is detected at a concentration greater than or equal to 50 mg/kg, and assuming that 100 percent of the total lead is soluble, soluble lead analysis is required. Lead-containing waste is classified as "Resource, Conservation, and Recovery Act" (RCRA) hazardous, or Federal hazardous, when the soluble lead content equals or exceeds the Federal regulatory level of 5 mg/l based on the Toxicity Characteristic Leaching Procedure (TCLP).

The above regulatory criteria are based on chemical concentrations. Wastes may also be classified as hazardous based on other criteria such as ignitability; however, for the purposes of this investigation, toxicity (i.e., lead concentrations) is the primary factor considered for waste classification since waste generated during the construction activities would not likely warrant testing for ignitability or other criteria. Waste that is classified as either California hazardous or RCRA hazardous requires management as a hazardous waste.

Potential hazards exist to workers who remove or cut through LCP coatings during demolition. Dust containing hazardous concentrations of lead may be generated during scraping or cutting materials coated with lead-containing paint. Torching of these materials may produce lead oxide fumes. Therefore, air monitoring and/or respiratory protection may be required during the demolition of materials coated with LCP. Guidelines regarding regulatory provisions for construction work where workers may be exposed to lead are presented in the Title 8, CCR, Section 1532.1.

3.0 SCOPE OF SERVICES

Mr. Scott Nunes performed the asbestos and deteriorated LCP survey at the Site on January 25, 2017. Mr. Nunes is a California-Certified Asbestos Consultant (CAC), certification No. 92-0547 (expiration March 4, 2018), and Certified Lead Paint Inspector/Assessor with the California Department of Public Health (DPH), certification number I-1085 (expiration March 24, 2017). Architectural plans and copies of previous survey reports for the Site were not available for our review.

3.1 Asbestos

Suspect ACM were grouped into homogeneous areas with representative samples randomly collected from each. In addition, each potential ACM was evaluated for quantity and friability. A total of 18 bulk asbestos samples representing six material types were collected from the Site.

Geocon's procedures for inspection and sampling are discussed below:

- Collected bulk asbestos samples after first wetting friable material with a light mist of water. The samples were then cut from the substrate and transferred to labeled containers. Note that when multiple samples were collected, the sampling locations were distributed throughout the homogeneous area (spaces where the material was observed).

- Relinquished bulk asbestos samples to AQ Environmental Laboratories, a California-licensed laboratory, for asbestos analysis in accordance with EPA Test Method 600/R-93/116 using polarized light microscopy (PLM) procedures under standard chain-of-custody procedures. AQ Environmental Laboratories is a laboratory accredited by the National Institute of Standards and Technology National Voluntary Laboratory Accreditation Program (NIST-NVLAP) for bulk asbestos fiber analysis. The laboratory analyses were requested on a standard turnaround.

Sample locations are presented on the Site Plan, Figure 2. Geocon sample identification numbers, material descriptions, locations, approximate quantities, friability assessments, and photo references are summarized in Table 1. Materials represented by the samples collected are shown in the attached photographs.

3.2 Lead Paint

A total of two bulk paint samples were collected from the Site. Our sampling procedures are discussed below:

- Collected representative bulk samples of suspect LCP using techniques presented in HUD guidelines. In addition, each painted area was evaluated for evidence of deterioration such as flaking or cracking.

- Relinquished LCP samples to Advanced Technology Laboratories (ATL), a California-licensed laboratory, for lead analyses in accordance with EPA Test Method 6010 under standard chain-of-custody procedures. The laboratory analyses were requested on a standard turnaround.

Sample locations are presented on the Site Plan, Figure 2. Geocon paint sample identification numbers, paint descriptions, locations, approximate peeling/flaking quantities, and photo references are summarized in Table 2. Materials represented by the samples collected are shown in the attached photographs.

4.0 INVESTIGATIVE RESULTS

4.1 Asbestos Results

No asbestos fibers were detected in the suspect materials sampled during our asbestos survey at the Site. A summary of the analytical laboratory test results for asbestos is presented in Table 1.

4.2 Paint Results

Sample P-1 representing approximately 120 square feet of deteriorated gray paint on the east sidewalk barrier wall exhibited a total lead concentration of 23 mg/kg.

Sample P-2 representing approximately 120 square feet of deteriorated gray paint on the west sidewalk barrier wall exhibited a total lead concentration of 15 mg/kg.

A summary of the analytical laboratory test results for paint is presented in Table 2.

5.0 CONCLUSIONS AND RECOMMENDATIONS

5.1 Asbestos

Since no asbestos was detected, the Cal/OSHA asbestos standard does not apply for activities disturbing suspect materials represented by samples collected during our survey. In addition, suspect materials represented by samples collected during our survey would not be considered a California hazardous waste based on asbestos content.

In accordance with Mojave Desert Air Quality Management District requirements, written notification is required ten working days prior to commencement of *any* demolition activity (whether asbestos is present or not). A 24-hour Cal/OSHA notification would also be necessary for this project.

5.2 Lead Paint

The deteriorated paints identified during our LCP survey would not be classified as a California or Federal (RCRA) hazardous waste based on total lead content if stripped, blasted, or otherwise separated from the substrate.

We recommend that all paints at the Site be treated as lead-containing for purposes of determining the applicability of the Cal/OSHA lead standard during maintenance, renovation, or demolition activities. This recommendation is based on LCP sample results and the fact that lead was a common ingredient of paints manufactured before 1978 and is still an ingredient of some paints. Compliance and training

requirements regarding construction activities where workers may be exposed to lead are presented in Title 8, CCR, Section 1532.1, subsections (e) and (l), respectively. In accordance with Title 8, CCR, Section 1532.1(p), written notification to the nearest Cal/OSHA district office is required at least 24 hours prior to certain lead-related work.

6.0 REPORT LIMITATIONS

This report has been prepared exclusively for Dokken Engineering. The information contained herein is only valid as of the date of the report, and will require an update to reflect additional information obtained.

The asbestos and deteriorated LCP survey was conducted in conformance with generally accepted standards of practice for identifying and evaluating asbestos and LCP in structures. The survey addressed only the structure identified in Section 1.1. Due to the nature of structure surveys, asbestos and LCP use, and laboratory analytical limitations, some asbestos or deteriorated LCP in the structure may not have been identified. Spaces, such as cavities, crawlspaces, voids, and pipe chases, may have been concealed to our investigator. Previous retrofit/rehabilitation work may have concealed or covered spaces or materials, or may have partially demolished materials and left debris in inaccessible areas. Additionally, retrofit/rehabilitation activities may have partially replaced asbestos with indistinguishable non-asbestos. Asbestos and/or LCP may exist in areas not accessible or sampled in conjunction with our scope of services.

During renovation or demolition operations, suspect materials may be uncovered which are different from those accessible for sampling during this assessment. Personnel in charge of renovation/demolition should be alerted to note materials uncovered during such activities that differ substantially from those included in this or previous assessment reports. If additional suspect materials are found, they should be treated as hazardous until/unless sampling and analysis indicate otherwise.

This report is not a comprehensive site characterization and should not be construed as such. The findings as presented in this report are predicated on the results of the limited sampling and laboratory testing performed. In addition, the information obtained is not intended to address potential impacts related to sources other than those specified herein. Therefore, the report should be deemed conclusive with respect to only the information obtained. We make no warranty with respect to the content of this report or any subsequent reports, correspondence, or consultation. Geocon strived to perform the services summarized herein in accordance with the local standard of care in the geographic region at the time the services were rendered.

The contents of this report reflect the views of the author who is responsible for the facts and accuracy of the data presented herein. This report does not constitute a standard, specification, or regulation.

GEOCON WEST, INC.
3303 N. SAN FERNANDO BLVD. – SUITE 100 - BURBANK, CA. 91504
PHONE 818 841-8388 – FAX 818 841-1704

Bear Valley Road Overhead at BNSF Railroad

Victorville, California

VICINITY MAP

A9072-06-01	February 2017	Figure 1

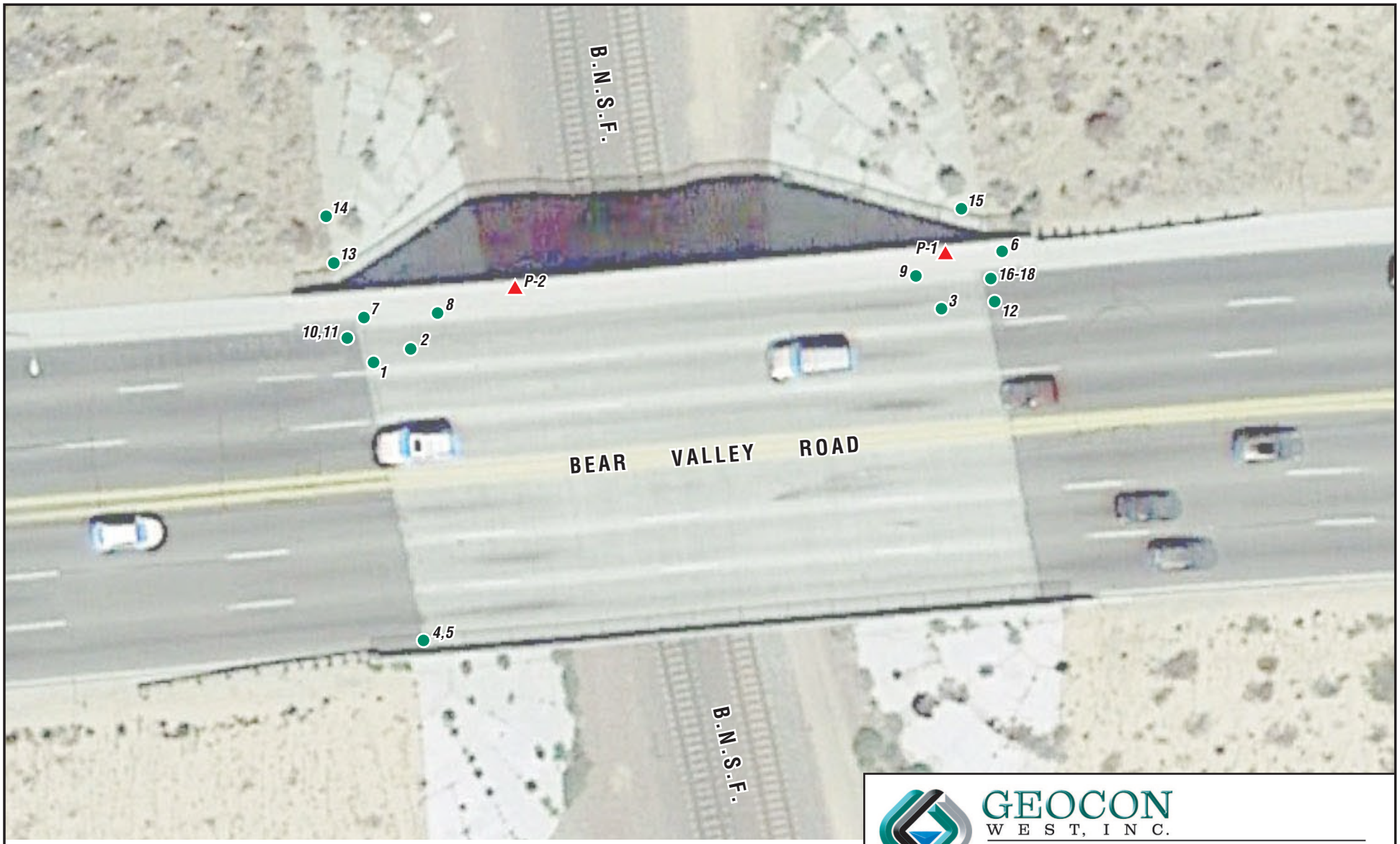

LEGEND:

- Approximate Asbestos Sample Location
- Approximate Paint Sample Location

N

0 30

Scale in Feet

GEOCON
WEST, INC.
3303 N. SAN FERNANDO BLVD. – SUITE 100 - BURBANK, CA. 91504
PHONE 818 841-8388 – FAX 818 841-1704

Bear Valley Road Overhead at BNSF Railroad

Victorville,
California

SITE PLAN

A9072-06-01	February 2017	Figure 2

Photo 1 – View northeast at the bridge.

Photo 2 – View east at the bridge.

GEOCON
CONSULTANTS, INC.

3303 N. San Fernando Blvd., Suite 100, Burbank, CA 91504
PHONE (818) 841-8388 – FAX (818) 841-1704

SITE PHOTOS 1 & 2		
Asbestos and Deteriorated Lead-Containing Paint Survey Bear Valley Road Overhead at BNSF Railroad Victorville, California		
A9072-06-01		February 2017

Photo 3 – Non-asbestos bridge deck concrete.

Photo 4 – Non-asbestos sidewalk wall concrete.

GEOCON
CONSULTANTS, INC.

3303 N. San Fernando Blvd., Suite 100, Burbank, CA 91504
PHONE (818) 841-8388 – FAX (818) 841-1704

SITE PHOTOS 3 & 4		
Asbestos and Deteriorated Lead-Containing Paint Survey Bear Valley Road Overhead at BNSF Railroad Victorville, California		
A9072-06-01		February 2017

Photo 5 – Non-asbestos sidewalk concrete.

Photo 6 – Non-asbestos asphalt.

GEOCON
CONSULTANTS, INC.

3303 N. San Fernando Blvd., Suite 100, Burbank, CA 91504
PHONE (818) 841-8388 – FAX (818) 841-1704

SITE PHOTOS 5 & 6		
Asbestos and Deteriorated Lead-Containing Paint Survey Bear Valley Road Overhead at BNSF Railroad Victorville, California		
A9072-06-01		February 2017

Photo 7 – Non-asbestos abutment concrete.

Photo 8 – Non-asbestos black seam tar.

GEOCON
CONSULTANTS, INC.

3303 N. San Fernando Blvd., Suite 100, Burbank, CA 91504
PHONE (818) 841-8388 – FAX (818) 841-1704

SITE PHOTOS 7 & 8		
Asbestos and Deteriorated Lead-Containing Paint Survey Bear Valley Road Overhead at BNSF Railroad Victorville, California		
A9072-06-01		February 2017

Photo 9 – Deteriorated gray LCP on east sidewalk wall.

Photo 10 – Deteriorated gray LCP on west sidewalk wall.

GEOCON
CONSULTANTS, INC.

3303 N. San Fernando Blvd., Suite 100, Burbank, CA 91504
PHONE (818) 841-8388 – FAX (818) 841-1704

SITE PHOTOS 9 & 10		
Asbestos and Deteriorated Lead-Containing Paint Survey Bear Valley Road Overhead at BNSF Railroad Victorville, California		
A9072-06-01		February 2017

TABLE 1
SUMMARY OF ANALYTICAL LABORATORY TEST RESULTS - ASBESTOS
BEAR VALLEY ROAD OVERHEAD AT BNSF RAILROAD
VICTORVILLE, CALIFORNIA

Polarized Light Microscopy (PLM) - EPA Test Method 600/R-93/116

Sample Group No. ID	Description of Suspect Material	Location	Approximate Quantity	Friable	Site Photograph	Asbestos Content
1 to 3	Bridge deck concrete	Bridge deck	NA	NA	3	ND
4 to 6	Sidewalk wall concrete	Sidewalk walls	NA	NA	4	ND
7 to 9	Sidewalk concrete	North sidewalk	NA	NA	5	ND
10 to 12	Asphalt	West and east bridge approaches	NA	NA	6	ND
13 to 15	Abutment concrete	West and east abutments	NA	NA	7	ND
16 to 18	Black seam tar	East bridge deck	NA	NA	8	ND

Notes:
NA = Not applicable
ND = No asbestos fibers detected

TABLE 2
SUMMARY OF ANALYTICAL LABORATORY TEST RESULTS - PAINT
BEAR VALLEY ROAD OVERHEAD AT BNSF RAILROAD
VICTORVILLE, CALIFORNIA

Total Lead

Sample ID	Paint Description	Location	Approximate Quantity Peeling & Flaking	Site Photograph	Total Lead (mg/kg)
P-1	Gray	Sidewalk barrier wall - east	120 square feet	9	23
P-2	Gray	Sidewalk barrier wall - west	120 square feet	10	15

Notes:
mg/kg = milligrams per kilogram

APPENDIX A

ENVIRONMENTAL LABORATORIES LLC

1508 East 33rd Street
Signal Hill, CA 90755
Toll: 888-207-2022
Tel: 562-206-2770
Fax: 562-206-2773

Geocon West, Inc.
41571 Corning Place, Suite 101
Murrieta CA 92562
Attn.: Scott Nunes

Report Number 1726703

Project Number A9072-06-01
Project Name Bear Valley Rd. Overhead at BNSF Railroad
Location Victorville, CA
PO Number
WO Number

Date Received 02/01/2017
Date Analyzed 02/04/2017
Date Reported 02/06/2017

Date Sampled 01/25/2017
Sampled By SN
Total Samples 18

Method of Analysis 40 CFR Part 763 Appendix E to Subpart E, EPA Method 600/M4-82-020; updated method 600 R-93/116 Determination of Asbestos in Bulk Building Materials.

Test Report

Laboratory ID Sample No.	Sample Location Description	Layer No. Layer %	Non-Asbestos Components	(%)	Asbestos Type	(%)
1726703-001	West					
1	Bridge Deck Concrete, Gray, Homogeneous	LAYER 1			None Detected	
		100%	Calcium Carbonate	35%		
			Quartz	45%		
			Other Non-Fibrous Material	20%		
	Asbestos Present: No		Total % Non-Asbestos:	100.0%	**Total %Asbestos:**	**No Asbestos Detected**
1726703-002	West					
2	Bridge Deck Concrete, Gray, Homogeneous	LAYER 1			None Detected	
		100%	Calcium Carbonate	35%		
			Quartz	45%		
			Other Non-Fibrous Material	20%		
	Asbestos Present: No		Total % Non-Asbestos:	100.0%	**Total %Asbestos:**	**No Asbestos Detected**
1726703-003	East					
3	Bridge Deck Concrete, Gray, Homogeneous	LAYER 1			None Detected	
		100%	Calcium Carbonate	40%		
			Quartz	40%		
			Other Non-Fibrous Material	20%		
	Asbestos Present: No		Total % Non-Asbestos:	100.0%	**Total %Asbestos:**	**No Asbestos Detected**
1726703-004	South					
4	Sidewalk Wall Concrete, Gray, Homogeneous	LAYER 1			None Detected	
		100%	Quartz	50%		
			Calcium Carbonate	25%		
			Other Non-Fibrous Material	25%		
	Asbestos Present: No		Total % Non-Asbestos:	100.0%	**Total %Asbestos:**	**No Asbestos Detected**
1726703-005	South					
5	Sidewalk Wall Concrete, Gray, Homogeneous	LAYER 1			None Detected	
		100%	Calcium Carbonate	60%		
			Quartz	20%		
			Other Non-Fibrous Material	20%		
	Asbestos Present: No		Total % Non-Asbestos:	100.0%	**Total %Asbestos:**	**No Asbestos Detected**

ENVIRONMENTAL LABORATORIES LLC

1508 East 33rd Street
Signal Hill, CA 90755
Toll: 888-207-2022
Tel: 562-206-2770
Fax: 562-206-2773

Geocon West, Inc.
41571 Corning Place, Suite 101
Murrieta CA 92562
Attn.: Scott Nunes

Report Number 1726703

Project Number A9072-06-01
Project Name Bear Valley Rd. Overhead at BNSF Railroad
Location Victorville, CA
PO Number
WO Number

Date Received 02/01/2017
Date Analyzed 02/04/2017
Date Reported 02/06/2017

Date Sampled 01/25/2017
Sampled By SN
Total Samples 18

Method of Analysis 40 CFR Part 763 Appendix E to Subpart E, EPA Method 600/M4-82-020; updated method 600 R-93/116 Determination of Asbestos in Bulk Building Materials.

Test Report

Laboratory ID Sample No.	Sample Location Description	Layer No. Layer %	Non-Asbestos Components	(%)	Asbestos Type	(%)
1726703-006	North					
6	Sidewalk Wall Concrete, Gray, Homogeneous	LAYER 1			None Detected	
		100%	Calcium Carbonate	60%		
			Quartz	20%		
			Other Non-Fibrous Material	20%		
	Asbestos Present: No		Total % Non-Asbestos:	100.0%	**Total %Asbestos:**	**No Asbestos Detected**
1726703-007	North					
7	Sidewalk Concrete, Gray, Homogeneous	LAYER 1			None Detected	
		100%	Calcium Carbonate	40%		
			Quartz	40%		
			Other Non-Fibrous Material	20%		
	Asbestos Present: No		Total % Non-Asbestos:	100.0%	**Total %Asbestos:**	**No Asbestos Detected**
1726703-008	North					
8	Sidewalk Concrete, Gray, Homogeneous	LAYER 1			None Detected	
		100%	Calcium Carbonate	40%		
			Quartz	40%		
			Other Non-Fibrous Material	20%		
	Asbestos Present: No		Total % Non-Asbestos:	100.0%	**Total %Asbestos:**	**No Asbestos Detected**
1726703-009	North					
9	Sidewalk Concrete, Gray, Homogeneous	LAYER 1			None Detected	
		100%	Quartz	50%		
			Calcium Carbonate	25%		
			Other Non-Fibrous Material	25%		
	Asbestos Present: No		Total % Non-Asbestos:	100.0%	**Total %Asbestos:**	**No Asbestos Detected**
1726703-010	West					
10	Asphalt, Black, Homogeneous	LAYER 1			None Detected	
		100%	Bituminous Matrix	30%		
			Quartz/Filler	70%		
	Asbestos Present: No		Total % Non-Asbestos:	100.0%	**Total %Asbestos:**	**No Asbestos Detected**

ENVIRONMENTAL LABORATORIES LLC

1508 East 33rd Street
Signal Hill, CA 90755
Toll: 888-207-2022
Tel: 562-206-2770
Fax: 562-206-2773

Geocon West, Inc.
41571 Corning Place, Suite 101
Murrieta CA 92562
Attn.: Scott Nunes

Report Number 1726703

Project Number A9072-06-01
Project Name Bear Valley Rd. Overhead at BNSF Railroad
Location Victorville, CA
PO Number
WO Number

Date Received 02/01/2017
Date Analyzed 02/04/2017
Date Reported 02/06/2017

Date Sampled 01/25/2017
Sampled By SN
Total Samples 18

Method of Analysis 40 CFR Part 763 Appendix E to Subpart E, EPA Method 600/M4-82-020; updated method 600 R-93/116 Determination of Asbestos in Bulk Building Materials.

Test Report

Laboratory ID Sample No.	Sample Location Description	Layer No. Layer %	Non-Asbestos Components	(%)	Asbestos Type	(%)
1726703-011	West					
11	Asphalt, Black, Homogeneous	LAYER 1			None Detected	
		100%	Bituminous Matrix	30%		
			Quartz/Filler	70%		
	Asbestos Present: No		Total % Non-Asbestos:	100.0%	**Total %Asbestos:**	**No Asbestos Detected**
1726703-012	East					
12	Asphalt, Black, Homogeneous	LAYER 1			None Detected	
		100%	Bituminous Matrix	30%		
			Quartz/Filler	70%		
	Asbestos Present: No		Total % Non-Asbestos:	100.0%	**Total %Asbestos:**	**No Asbestos Detected**
1726703-013	West					
13	Abutment Concrete, Gray, Homogeneous	LAYER 1			None Detected	
		100%	Calcium Carbonate	25%		
			Quartz	45%		
			Other Non-Fibrous Material	30%		
	Asbestos Present: No		Total % Non-Asbestos:	100.0%	**Total %Asbestos:**	**No Asbestos Detected**
1726703-014	West					
14	Abutment Concrete, Gray, Homogeneous	LAYER 1			None Detected	
		100%	Calcium Carbonate	25%		
			Quartz	45%		
			Other Non-Fibrous Material	30%		
	Asbestos Present: No		Total % Non-Asbestos:	100.0%	**Total %Asbestos:**	**No Asbestos Detected**
1726703-015	East					
15	Abutment Concrete, Gray, Homogeneous	LAYER 1			None Detected	
		100%	Calcium Carbonate	25%		
			Quartz	45%		
			Other Non-Fibrous Material	30%		
	Asbestos Present: No		Total % Non-Asbestos:	100.0%	**Total %Asbestos:**	**No Asbestos Detected**

ENVIRONMENTAL LABORATORIES LLC

1508 East 33rd Street
Signal Hill, CA 90755
Toll: 888-207-2022
Tel: 562-206-2770
Fax: 562-206-2773

Geocon West, Inc.
41571 Corning Place, Suite 101
Murrieta CA 92562
Attn.: Scott Nunes

Report Number 1726703

Project Number A9072-06-01
Project Name Bear Valley Rd. Overhead at BNSF Railroad
Location Victorville, CA
PO Number
WO Number

Date Received 02/01/2017
Date Analyzed 02/04/2017
Date Reported 02/06/2017

Date Sampled 01/25/2017
Sampled By SN
Total Samples 18

Method of Analysis 40 CFR Part 763 Appendix E to Subpart E, EPA Method 600/M4-82-020; updated method 600 R-93/116 Determination of Asbestos in Bulk Building Materials.

Test Report

Laboratory ID Sample No.	Sample Location Description	Layer No. Layer %	Non-Asbestos Components	(%)	Asbestos Type	(%)
1726703-016	East					
16	Seam Tar, Black, Non-homogeneous	LAYER 1			None Detected	
		100%	Bituminous Matrix/Filler	90%		
			Other Non-Fibrous Material	10%		
	Asbestos Present: No		Total % Non-Asbestos:	100.0%	**Total %Asbestos:**	**No Asbestos Detected**
1726703-017	East					
17	Seam Tar, Black, Non-homogeneous	LAYER 1			None Detected	
		100%	Bituminous Matrix/Filler	90%		
			Other Non-Fibrous Material	10%		
	Asbestos Present: No		Total % Non-Asbestos:	100.0%	**Total %Asbestos:**	**No Asbestos Detected**
1726703-018	East					
18	Seam Tar, Black, Non-homogeneous	LAYER 1			None Detected	
		100%	Bituminous Matrix/Filler	90%		
			Other Non-Fibrous Material	10%		
	Asbestos Present: No		Total % Non-Asbestos:	100.0%	**Total %Asbestos:**	**No Asbestos Detected**

Method Detection Limit: Less than one percent (<1%). Asbestos content has been determined using calibrated visual estimation (CVES). Samples tested were received in acceptable condition unless otherwise stated. Test report relates only to items tested. Due to PLM limitations, results on samples with None Detected or samples with low asbestos concentrations may not be reliable and further analysis such as TEM is recommended to confirm PLM results. This report shall not be reproduced except in full without the written approval of this laboratory. This report may not be used by the customer to claim product certification, endorsement, or approval by NIST/NVLAP or any agency of the government. Samples shall be disposed according to local, state and federal laws, 30 days after results are reported.

Analyst - Fred Chappelear

Approved Signatory Cristina E. Tabatt

NVLAP®
Lab Code 500044-0

CHAIN OF CUSTODY

ENVIRONMENTAL LABORATORIES

1508 E. 33rd Street
Signal Hill, CA 90755
562-206-2770 Tel
562-206-2773 Fax
services@AQenvlabs.com

(Lab) Order No. 1726703

CUSTOMER INFORMATION	
Company	Geocon
Address	41571 Corning Place, Suite 101
City/State/Zip	Murrieta, CA 92881
Contact	Scott Nunes
Office Phone	(951) 304-2300
Cell	(951) 256-6535
Fax	(951) 304-2392
Email	nunes@geocontrc.com

Turnaround Time		Shipped By		Report Send Via:	
Same Day	☐	Fedex	☐	Web	☐
1 Day	☐	UPS	☐	Email	☒
2 Day	☐	USPS	☐	Fax	☐
3 Day	☒	Drop Off	☐	Verbal	☐
5 Day	☐	Drop Box	☐	Mail	☐
Weekend	☐	Other	☐	Pick up	☐

Special Instructions:

PROJECT INFORMATION

Project Name: Bear Valley Rd. Overhead at BNSF Railroad	PO Number:
Project Number: A9072-06-01	Work Order No.:
Location: Victorville, CA	Sampled By: SN

PLM		PCM		MOLD		LEAD (Pb)			
PLM EPA 600/R-93/116	☒	NIOSH 7400A	☐	Spore Trap	☐	Air	☐	TTLC	☐
PLM 400 Pt. Count (<0.25%)	☐	NIOSH 7400B	☐	Tape Lift	☐	Paint	☐		
PLM 1000 Pt. Count (<0.1%)	☐	w/ TWA	☐	Bulk Sample	☐	Wipe	☐		
				Swab	☐	Soil	☐		

SAMPLE ID	SAMPLE TYPE	LOCATION	Date Sampled	Start Time / Stop Time	Avg Flow Rate	Volume (L)

Relinquished By: [signature]	Received By: [signature]
Date/Time: 1-31-17 / 1:40 pm	Date/Time: 2/1/17 / 09:52

Lab Forms
Ver. 082411

GEOCON
WEST, INC.
GEOTECHNICAL ■ ENVIRONMENTAL ■ MATERIALS

1726703

BULK SAMPLE LOG

Project Name: Bear Valley BNSF Bridge Collected By: SN

Project No.: A9072-06-01 Date: 1-25-17

HOMOGENEOUS MATERIAL: Bridge Deck Concrete

Sample Number	Location	Area Sq. Ft.	Condition
1	West		Good
2	West		↓
3	East		

NOTES:

CHAIN OF CUSTODY

Relinquished By: Time: Date:

Received By: [signature] Time: 09:52 Date: 2/1/17

Relinquished By: Time: Date:

Received By: Time: Date:

GEOCON
WEST, INC.
GEOTECHNICAL ■ ENVIRONMENTAL ■ MATERIALS

1726703

BULK SAMPLE LOG

Project Name: Bear Valley BNSF Bridge Collected By: SN

Project No.: A9072-06-01 Date: 1-25-17

HOMOGENEOUS MATERIAL: Sidewalk Wall Concrete

Sample Number	Location	Area Sq. Ft.	Condition
4	South		Good
5	"		↓
6	North		

NOTES:

CHAIN OF CUSTODY

Relinquished By: Time: Date:

Received By: [signature] Time: 09:52 Date: 2/1/17

Relinquished By: Time: Date:

Received By: Time: Date:

GEOCON
WEST, INC.
GEOTECHNICAL ■ ENVIRONMENTAL ■ MATERIALS

1726703

BULK SAMPLE LOG

Project Name: Bear Valley BNSF Bridge Collected By: SN

Project No.: A9072-06-01 Date: 1-25-17

HOMOGENEOUS MATERIAL: Sidewalk Concrete

Sample Number	Location	Area Sq. Ft.	Condition
7	North		Good
8	"		↓
9	"		

NOTES:

CHAIN OF CUSTODY

Relinquished By: Time: Date:

Received By: Time: 09:52 Date: 2/1/17

Relinquished By: Time: Date:

Received By: Time: Date:

GEOCON
WEST, INC.
GEOTECHNICAL ■ ENVIRONMENTAL ■ MATERIALS

1726703

BULK SAMPLE LOG

Project Name: Bear Valley BNSF Bridge Collected By: SN

Project No.: A9072-06-01 Date: 1-25-17

HOMOGENEOUS MATERIAL: Asphalt

Sample Number	Location	Area Sq. Ft.	Condition
10	West		Good
11	"		↓
12	East		

NOTES:

CHAIN OF CUSTODY

Relinquished By: Time: Date:

Received By: [signature] Time: 09:52 Date: 2/1/17

Relinquished By: Time: Date:

Received By: Time: Date:

GEOCON
WEST, INC.
GEOTECHNICAL ■ ENVIRONMENTAL ■ MATERIALS

1726703

BULK SAMPLE LOG

Project Name: Bear Valley BNSF Bridge Collected By: SN

Project No.: A9072-06-01 Date: 1-25-17

HOMOGENEOUS MATERIAL: Abutment Concrete

Sample Number	Location	Area Sq. Ft.	Condition
13	West		Good
14	West		↓
15	East		↓

NOTES:

CHAIN OF CUSTODY

Relinquished By: Time: Date:

Received By: [signature] Time: 09:52 Date: 2/1/17

Relinquished By: Time: Date:

Received By: Time: Date:

GEOCON
WEST, INC.
GEOTECHNICAL ■ ENVIRONMENTAL ■ MATERIALS

1726703

BULK SAMPLE LOG

Project Name: Bear Valley BNSF Bridge Collected By: SN

Project No.: A9072-06-01 Date: 1-25-17

HOMOGENEOUS MATERIAL: Black Seam Tar

Sample Number	Location	Area Sq. Ft.	Condition
16	East		Good
17	"		↓
18	"		

NOTES:

CHAIN OF CUSTODY

Relinquished By: Time: Date:

Received By: [signature] Time: 09:52 Date: 2/1/17

Relinquished By: Time: Date:

Received By: Time: Date:

February 07, 2017

Scott Nunes
Geocon West, Inc.
41571 Corning Place, Suite 101
Murrietta, CA 92562
Tel: (951) 304-2300
Fax:(951) 304-2392

ELAP No.: 1838
CSDLAC No.: 10196
ORELAP No.: CA300003
TCEQ No. : T104704502

Re: ATL Work Order Number : 1700464

Client Reference : Bear Valley Road Overhead at BNSF Railroad, A9072-

Enclosed are the results for sample(s) received on February 02, 2017 by Advanced Technology Laboratories. The sample(s) are tested for the parameters as indicated on the enclosed chain of custody in accordance with applicable laboratory certifications. The laboratory results contained in this report specifically pertains to the sample(s) submitted.

Thank you for the opportunity to serve the needs of your company. If you have any questions, please feel free to contact me or your Project Manager.

Sincerely,

Eddie Rodriguez
Laboratory Director

The cover letter and the case narrative are an integral part of this analytical report and its absence renders the report invalid. Test results contained within this data package meet the requirements of applicable state-specific certification programs. The report cannot be reproduced without written permission from the client and Advanced Technology Laboratories.

Certificate of Analysis

Geocon West, Inc.	Project Number :	Bear Valley Road Overhead at BNSF Rail
41571 Corning Place, Suite 101	Report To :	Scott Nunes
Murrietta , CA 92562	Reported :	02/07/2017

SUMMARY OF SAMPLES

Sample ID	Laboratory ID	Matrix	Date Sampled	Date Received
P-1/Gray Paint on North Sidewalk Wa	1700464-01	Paint Chip	1/25/17 10:10	2/02/17 10:00
P-2/Gray Paint on North Sidewalk Wa	1700464-02	Paint Chip	1/25/17 10:40	2/02/17 10:00

Certificate of Analysis

Geocon West, Inc.		Project Number :	Bear Valley Road Overhead at BNSF Rail
41571 Corning Place, Suite 101		Report To :	Scott Nunes
Murrietta , CA 92562		Reported :	02/07/2017

Client Sample ID P-1/Gray Paint on North Sidewalk Wall - East

Lab ID: 1700464-01

Total Metals by ICP-AES EPA 6010B **Analyst: GO**

Analyte	Result (mg/kg)	PQL (mg/kg)	Dilution	Batch	Prepared	Date/Time Analyzed	Notes
Lead	**23**	2.0	2	B7B0157	02/06/2017	02/06/17 15:11	D1

Certificate of Analysis

Geocon West, Inc.		Project Number :	Bear Valley Road Overhead at BNSF Rail
41571 Corning Place, Suite 101		Report To :	Scott Nunes
Murrietta , CA 92562		Reported :	02/07/2017

Client Sample ID P-2/Gray Paint on North Sidewalk Wall - West

Lab ID: 1700464-02

Total Metals by ICP-AES EPA 6010B **Analyst: GO**

Analyte	Result (mg/kg)	PQL (mg/kg)	Dilution	Batch	Prepared	Date/Time Analyzed	Notes
Lead	**15**	2.0	2	B7B0157	02/06/2017	02/06/17 15:15	D1

Certificate of Analysis

Geocon West, Inc.	Project Number :	Bear Valley Road Overhead at BNSF Rail
41571 Corning Place, Suite 101	Report To :	Scott Nunes
Murrietta , CA 92562	Reported :	02/07/2017

QUALITY CONTROL SECTION

Total Metals by ICP-AES EPA 6010B - Quality Control

Analyte	Result (mg/kg)	PQL (mg/kg)	MDL (mg/kg)	Spike Level	Source Result	% Rec	% Rec Limits	RPD	RPD Limit	Notes
Batch B7B0157 - EPA 3050B_S										
Blank (B7B0157-BLK1)					Prepared: 2/6/2017 Analyzed: 2/6/2017					
Lead	ND	1.0	0.11			NR				
LCS (B7B0157-BS1)					Prepared: 2/6/2017 Analyzed: 2/6/2017					
Lead	48.0096	1.0	0.11	50.0000		96.0	80 - 120			
Matrix Spike (B7B0157-MS1)			**Source: 1604857-54**		Prepared: 2/6/2017 Analyzed: 2/6/2017					
Lead	104.943	1.0	0.11	125.000	3.36438	81.3	34 - 129			
Matrix Spike Dup (B7B0157-MSD1)			**Source: 1604857-54**		Prepared: 2/6/2017 Analyzed: 2/6/2017					
Lead	106.162	1.0	0.11	125.000	3.36438	82.2	34 - 129	1.16	20	

Certificate of Analysis

Geocon West, Inc.		Project Number :	Bear Valley Road Overhead at BNSF Rail
41571 Corning Place, Suite 101		Report To :	Scott Nunes
Murrietta , CA 92562		Reported :	02/07/2017

Notes and Definitions

D1	Sample required dilution due to possible matrix interference.
ND	Analyte is not detected at or above the Practical Quantitation Limit (PQL). When client requests quantitation against MDL, analyte is not detected at or above the Method Detection Limit (MDL)
PQL	Practical Quantitation Limit
MDL	Method Detection Limit
NR	Not Reported
RPD	Relative Percent Difference
CA2	CA-ELAP (CDPH)
OR1	OR-NELAP (OSPHL)
TX1	TX-NELAP (TCEQ)

Notes:
(1) The reported MDL and PQL are based on prep ratio variation and analytical dilution.
(2) The suffix [2C] of specific analytes signifies that the reported result is taken from the instrument's second column.
(3) Results are wet unless otherwise specified.

ADVANCED TECHNOLOGY LABORATORIES

3275 Walnut Ave., Signal Hill, CA 90755
Tel: (562) 989-4045 • Fax: (562) 989-4040

CHAIN OF CUSTODY RECORD

Page 1 of 1

Instruction: Complete all shaded areas.

For Laboratory Use Only — ATLCOC Ver: 20130715

Method of Transport	Sample Conditions Upon Receipt					
	Condition	Y	N	Condition	Y	N
☐ Client ☐ ATL	1. CHILLED	☐	☑	5. # OF SAMPLES MATCH COC	☐	☐
☐ FedEx ☒ OnTrac	2. HEADSPACE (VOA)	☐	☐	6. PRESERVED	☐	☐
☐ GSO	3. CONTAINER INTACT	☐	☐	7. COOLER TEMP, deg C:	~	
☐ Other:	4. SEALED	☐	☐			

CUSTOMER

Company: Geocon
Address: 41571 Corning Place, Suite 101
City: Murrieta State: CA Zip: 92562
Tel: (951) 304-2300
Fax: (951) 304-2392

SEND REPORT TO:
Attn: Scott Nunes
Email: nunes@geoconinc.com
Company: Geocon
Address: 41571 Corning Place, Suite 101
City: Murrieta State: CA Zip: 92562

SEND INVOICE TO: ☒ same as SEND REPORT TO
Attn:
Email:
Company:
Address:
City: State: Zip:

PROJECT SAMPLES

Project Name: Beaver Valley Road Overhead at BNSF Railroad
Project No.: A9072-06-01
Sampler: Scott Nunes
Quote No:
PO #:
Special Instructions/Comments: Paint Chips — Lead

Encircle or Write Requested Analysis: 8260 / 624 (Volatiles); 8015(GRO); 8015(DRO); 8270(Semi-volatiles); 8081(Organochlorine Pesticides); 8082(PCBs); 6010 / 7000(Title 22 Metals); TO-15; Lead; Paint Chips

Encircle Sample Matrix: SOIL / SEDIMENT / SLUDGE; SOLIDS / WIPE/ FILTER; WATER - DRINKING / GROUND; WATER - STORM / WASTE; AQUEOUS / LAYERED - OIL

QA/QC: ☒ Routine ☐ Caltrans ☐ Legal ☐ RWQCB ☐ Level IV

ITEM	Lab No.	Sample Description: Sample ID / Location	Date	Time	8260 / 624 (Volatiles)	8015(GRO)	8015(DRO)	8270(Semi-volatiles)	8081(Organochlorine Pesticides)	8082(PCBs)	6010 / 7000(Title 22 Metals)	TO-15	Lead	Paint Chips	TAT	Container #	Type	Material	Preservative	REMARKS
1	1700464-01	P-1 / Gray Paint on North Sidewalk Wall - East	1-25-17	10:10am									✓	✓	3	1		2		
2	↓ -02	P-2 / Gray Paint on North Sidewalk Wall - West	1-25-17	10:40am									✓	✓	3	1		2		
3																				
4																				
5																				
6																				
7																				
8																				
9																				
10																				

Container Type: 1=Tube; 2=VOA; 3=Liter; 4=Pint; 5=Jar; 6=Tedlar; 7 = Canister
Material: 1=Glass; 2=Plastic; 3=Metal
Preservative: 1=HCl; 2=HNO3; 3=H2SO4; 4 = 4C; 5=Zn (AcI2; 6=NaOH; 7=NA2S2O3

TERMS

1. Sample receiving hours: 7:30 AM to 7:30 PM Monday - Friday; Saturday 8:00 AM to 12:00 PM.
2. Samples Submitted AFTER 3:00 PM, are considered received the following Business day at 8:00 AM.
3. The following turnaround time conditions apply:
   - TAT = 0 : 300% Surcharge SAME BUSINESS DAY if received by 9:00 AM
   - TAT = 1 : 100% Surcharge NEXT BUSINESS DAY (COB 5:00 PM)
   - TAT = 2 : 50% Surcharge 2ND BUSINESS DAY (COB 5:00 PM)
   - TAT = 3 : 30% Surcharge 3RD BUSINESS DAY (COB 5:00 PM)
   - TAT = 4 : 20% Surcharge 4TH BUSINESS DAY (COB 5:00 PM)
   - TAT = 5 : NO SURCHARGE 5th BUSINESS DAY (COB 5:00 PM)
4. Weekend, holiday, after-hours work - ask for quote.
5. Subcontract TAT is 10 - 15 business days. Projects requiring shorter TATs will incur a surcharge respective to the subcontract lab --- ask for quote.
6. Liquid and solid samples will be disposed of after 45 calendar days from receipt of samples; air samples will be disposed of after 14 calendar days after receipt of samples.
7. Electronic records maintained for five (5) years from report date.
8. Hard copy reports will be disposed of after 45 calendar days from report date.
9. Storage and Report Fees:
   - Liquid & solid samples: Complimentary storage for forty-five (45) calendar days from receipt of samples; $2/sample/month if extended storage or hold is requested.
   - Air samples: Complimentary storage for ten (10) calendar days from receipt of samples; $20/ sample/week if extended storage is requested.
   - Hard copy and regenerated reports/EDDs: $17.50 per hard copy report requested; $50.00 per regenerated/reformat ed report; $35 per reprocessed EDD.
10. Rush TCLP/STLC samples: add 2 days to analysis TAT for extraction on procedure.
11. Unanalyzed samples will incur a disposal fee of $7 per sample.

As the authorized agent of the company above, I hereby purchase laboratory services from ATL as shown above and hereby guarantee payment as quoted.

Scott M. Nunes — Submitter Print Name
Signature

Relinquished by: (Signature and Printed Name)	Date:	Time:	Received by: (Signature and Printed Name)	Date:	Time:
Scott M. Nunes / Scott M. Nunes	2-1-17	10:56 a.m.	Eduardo Rodriguez	2-2-17	10:00
Relinquished by: (Signature and Printed Name)	Date:	Time:	Received by: (Signature and Printed Name)	Date:	Time:
Relinquished by: (Signature and Printed Name)	Date:	Time:	Received by: (Signature and Printed Name)	Date:	Time:

EXHIBIT 3

Categorical Exemption & Environmental Commitment Record

CATEGORICAL EXEMPTION/CATEGORICAL EXCLUSION DETERMINATION FORM

08-SBD-City of Victorville			BHLS 5380(026)
Dist.-Co.-Rte. (or Local Agency)	P.M./P.M.	E.A/Project No.	Federal-Aid Project No. (Local Project)/Project No.

PROJECT DESCRIPTION: (Briefly describe project including need, purpose, location, limits, right-of-way requirements, and activities involved in this box. *Use Continuation Sheet, if necessary.)*

The City of Victorville, proposes to rehabilitate, retrofit, and widen the existing bridge on Bear Valley Road over the Burlington Northern Santa Fe Railroad. The project includes widening approaches to match the bridge widening as well as meet City of Victorville standards. The project would widen the structure to accommodate shoulders, sidewalks and a striped median, along with three travel lanes in each direction (which is the same number of travel lanes as the existing). Traffic signals at Industrial Boulevard and Ridgecrest Road would be modified. The project limits are from approximately 150 feet west of Industrial Boulevard to approximately 400 feet east of Ridgecrest Road. Temporary construction easements and utility relocation will be required.

CEQA COMPLIANCE *(for State Projects only)*

Based on an examination of this proposal and supporting information, the following statements are true and exceptions do not apply (See 14 CCR 15300 et seq.):

- If this project falls within exempt class 3, 4, 5, 6 or 11, it does not impact an environmental resource of hazardous or critical concern where designated, precisely mapped and officially adopted pursuant to law.
- There will not be a significant cumulative effect by this project and successive projects of the same type in the same place, over time.
- There is not a reasonable possibility that the project will have a significant effect on the environment due to unusual circumstances.
- This project does not damage a scenic resource within an officially designated state scenic highway.
- This project is not located on a site included on any list compiled pursuant to Govt. Code § 65962.5 ("Cortese List").
- This project does not cause a substantial adverse change in the significance of a historical resource.

CALTRANS CEQA DETERMINATION (Check one)

☐ **Exempt by Statute.** (PRC 21080[b]; 14 CCR 15260 et seq.)

Based on an examination of this proposal, supporting information, and the above statements, the project is:

☐ **Categorically Exempt. Class** . (PRC 21084; 14 CCR 15300 et seq.)

☐ **Categorically Exempt. General Rule exemption.** [This project does not fall within an exempt class, but it can be seen with certainty that there is no possibility that the activity may have a significant effect on the environment (CCR 15061[b][3].)

N/A	N/A
Print Name: Environmental Branch Chief	Print Name: Project Manager/DLA Engineer
N/A	N/A
Signature Date	Signature Date

NEPA COMPLIANCE

In accordance with 23 CFR 771.117, and based on an examination of this proposal and supporting information, the State has determined that this project:

- does not individually or cumulatively have a significant impact on the environment as defined by NEPA and is excluded from the requirements to prepare an Environmental Assessment (EA) or Environmental Impact Statement (EIS), and
- has considered unusual circumstances pursuant to 23 CFR 771.117(b).

CALTRANS NEPA DETERMINATION (Check one)

☒ **23 USC 326:** The State has determined that this project has no significant impacts on the environment as defined by NEPA, and that there are no unusual circumstances as described in 23 CFR 771.117(b). As such, the project is categorically excluded from the requirements to prepare an environmental assessment or environmental impact statement under the National Environmental Policy Act. The State has been assigned, and hereby certifies that it has carried out the responsibility to make this determination pursuant to Chapter 3 of Title 23, United States Code, Section 326 and a Memorandum of Understanding dated June 07, 2013, executed between the FHWA and the State. The State has determined that the project is a Categorical Exclusion under:

- ☒ **23 CFR 771.117(c): activity (c)(_28_)**
- ☐ **23 CFR 771.117(d): activity (d)(___)**
- ☐ **Activity ___ listed in Appendix A of the MOU between FHWA and the State**

☐ **23 USC 327:** Based on an examination of this proposal and supporting information, the State has determined that the project is a CE under 23 USC 327.

Aaron P. Burton	Sean Yeung
Print Name: Environmental Branch Chief	Print Name: Project Manager/DLA Engineer
12-9-2014	12/10/14
Signature Date	Signature Date

Date of Categorical Exclusion Checklist completion: 11/25/14 Date of ECR or equivalent : 11/25/14

Briefly list environmental commitments on continuation sheet. Reference additional information, as appropriate (e.g., CE checklist, additional studies and design conditions).

08-SBD-City of Victorville			BHLS 5380(026)
Dist.-Co.-Rte. (or Local Agency)	P.M./P.M.	E.A/Project No.	Federal-Aid Project No. (Local Project)/Project No.

Continued from page 1:

AIR

AQ-1: Use periodic watering for short-term stabilization of Disturbed Surface Area to minimize visible fugitive dust emissions. Use of a water truck to maintain moist disturbed surfaces and actively spread water during visible dusting episodes shall be considered sufficient to maintain compliance.

AQ-2: Take actions sufficient to prevent project-related trackout, or visible bulk material deposited upon public roadways as a result of active operations.

AQ-3: Cover loaded haul vehicles while operating on publicly maintained paved surfaces.

AQ-4: Stabilize graded site surfaces upon completion of grading when subsequent development is delayed or expected to be delayed more than thirty days, except when such a delay is due to precipitation that dampens the disturbed surface sufficiently to eliminate visible fugitive dust emissions.

AQ-5: Cleanup project-related trackout or spills on publicly maintained paved surfaces within 24 hours.

AQ-6: Reduce non-essential earth-moving activity (i.e. grading, cut/fill) under high wind conditions. Wind gusts that exceed 25 mph or, on an hourly average, when wind speeds exceed 15 mph are considered high winds. A reduction in earth-moving activity when visible dusting occurs from moist and dry surfaces due to wind erosion shall be considered sufficient to maintain compliance.

AQ-7 The Contractor must implement and follow Fugitive Dust Control Best Management Practices (BMP's). Standard Specifications 2010: Section 14-9: Air Quality

AQ-8 Implement and follow Erosion Control and Air Quality Best Management Practices (BMP's). Standard Specifications 2010: Section 14-9: Air Quality, Section 13: Water Pollution Control and Section 21: Erosion Control.

CC-1: The project would incorporate the use of energy-efficient lighting, such as light emitting diode (LED) traffic signals. LED bulbs cost $60 to $70 each, but last five to six years, compared to the one-year average lifespan of the incandescent bulbs previously used. The LED bulbs themselves consume 10 percent of the electricity of traditional lights, which will also help reduce the project's CO_2 emissions.

CC-2: According to the Department's Standard Specifications, the contractor must comply with all local Air Quality Management District rules, ordinances, and regulations for air quality restrictions.

NOISE

1. The contractor shall comply with all local sound control and noise level rules, regulations and ordinances that apply to any work performed pursuant to contract.

2. Each internal combustion engine, used for any purpose on the job or related to the job, shall be equipped with a muffler of a type recommend by the manufacturer. No internal combustion engine shall be operated on the project without the muffler.

COMMUNITY IMPACT

The project modifies an existing facility. No new barriers would be introduced and the project would not divide or adversely affect established communities. It would also not require full acquisitions. The following measures would be implemented to minimize any potential impacts from construction.

- COM-1: Emergency vehicle access would be maintained through traffic control and/or stage construction.

08-SBD-City of Victorville			BHLS 5380(026)
Dist.-Co.-Rte. (or Local Agency)	P.M./P.M.	E.A/Project No.	Federal-Aid Project No. (Local Project)/Project No.

CULTURAL RESOURCES

CUL-1: If cultural materials are discovered during construction, all earth-moving activity within and around the immediate discovery area will be diverted until a qualified archaeologist can assess the nature and significance of the find.

CUL-2: Section 5097.98 of the Public Resources Code and Section 7050.5 of the California Health and Safety Code protect Native American burials, skeletal remains and grave goods, regardless of age and provide method and means for the appropriate handling of such remains. If human remains are encountered, work should halt in that vicinity and the county coroner should be notified immediately. At the same time, an archaeologist should be contacted to evaluate the situation. If the human remains are of Native American origin, the coroner must notify the Native American Heritage Commission within 24 hours of such identification who will then notify the Most Likely Descendent (MLD). The person who discovered the remains will contact the District 8 Division of Environmental Planning; Gabrielle Duff, DEBC: (909)383-6933 and Gary Jones, DNAC: (909)383-7505, California Department of Transportation, District 8, so that they may work with the MLD on the respectful treatment and disposition of the remains. Further provisions of PRC 5097.98 are to be followed as applicable.

BIOLOGICAL RESOURCES

BIO-1: Prior to construction, a rare plant focused survey shall be conducted for desert cymopterus, sagebrush loeflingia, and beaver dam breadroot. Surveys should be conducted for cymopterus during April, sagebrush loeflingia during April-May, and beaver dam breadroot during April-May. Should surveys determine the presence of sensitive species within the BSA, specimens shall be ESA fenced or relocated as determined by the appropriate regulatory agency.

BIO-2: Erosion control or landscaping for this project shall not contain invasive species in the plant selections or seed mixtures. Construction equipment shall be cleaned before mobilizing to arrive at the project site and before leaving the project site.

BIO-3: After completion of the project, all areas subject to temporary ground disturbances, including storage and staging areas, temporary roads, etc. must be returned to pre-construction conditions, and revegetated with native seeds to promote restoration of the area.

BIO-4: A preconstruction survey shall be conducted to find nesting birds and/or active burrowing owl burrows within a 500-feet-wide buffer zone around any potentially suitable habitat that will be used during construction activities. The burrowing owl survey shall be conducted in accordance to the CDFW Staff Report on Burrowing Owl Mitigation (CDFG 2012).

BIO-5: Project-related vehicles will observe a 20-mph speed limit in all project areas, except on formalized roads. Off-road traffic outside of designated project areas should be prohibited.

BIO-6: The project boundaries near the unnammed tributary shall be staked with a ESA fencing on the project-side of the channel to ensure equipment does not encroach into the channel.

WATER QUALITY

WQ-1: For disturbed areas exceeding 1 acre national Pollutant Discharge Elimination System guidelines necessitate the development of a Strom Water Pollution Prevention Plan (SWPPP), unless the project qualifies for the EPA Small Construction Erosivity Waiver (SCEW), by the contractor. In the case the project qualifies for the SCEW, a Water Pollution Control Plan would be prepared in-lieu of the SWPPP to determine minimum control requirements.

WQ-2: Best Management Practices (BMPs) would be implemented. BMPs include any facilities and methods used to remove, reduce, or prevent storm water runoff pollutants from entering receiving waters. Erosion control methods, temporary and permanent BMPs, and continuity of drainage facilities along the roadway would minimize impacts from storm water runoff. The SWPPP and NPDES-compliant measures would ensure no adverse impacts would occur to water quality associated with the project. Specific methods will include, but are not limited to:

- Watering
- Outlet Protection/Velocity Dissipation Devices
- Geotextiles, Plastic Covers & Erosion Control Blankets/Mats

08-SBD-City of Victorville			BHLS 5380(026)
Dist.-Co.-Rte. (or Local Agency)	P.M./P.M.	E.A/Project No.	Federal-Aid Project No. (Local Project)/Project No.

HAZARDS AND HAZARDOUS MATERIALS

HAZ-1: An asbestos containing materials and lead containing paint survey of the bridge structure will be required to obtain permits for the bridge demolition/modification, and should be performed prior to construction.

HAZ-2: Underground Service Alert should be contacted for utility relocation.

HAZ-3: If soil is to be exported from the site, the analytical data and a generator waste profile will be submitted to the potential recipient for review and approval prior to shipping any soil off-site.

PERMITS

NPDES

Date: 11-25-14
CEQA/NEPA
CE/CE
Project Phase:
☒ PA/ED (*DED/FED*)
☐ PS&E Submittal
☐ Construction

ENVIRONMENTAL COMMITMENTS RECORD

The Rehabilitation and Widening of the Existing Bridge on Bear Valley Road over the Burlington Northern Santa Fe Railroad.

08-SBd-City of Victorville
Fed ID: BHLS 5380 026

Avoidance, Minimization, and/or Mitigation Measures	Page # in Env. Doc.	Environmental Analysis Source (Technical Study, Environmental Document, and/or Technical Discipline)	Responsible for Development and/or Implementation of Measure	Timing/ Phase	If applicable, corresponding construction provision: (standard, special, non-standard)	Action(s) Taken to Implement Measure	Measure Completed (Date and Initials)	Remarks	Environmental Compliance	
									YES	NO
Cultural Resources										
CR-1 If cultural materials are discovered during construction, all earth-moving activity within and around the immediate discovery area will be diverted until a qualified archaeologist can assess the nature and significance of the find.		Standard on Projects.	RE/Contractor	Construction	Standard Specifications 2010: Section: 14-2.02A Archeological Resources: General.		Contact Gabrielle Duff (909) 383-6933 or Gary Jones (909) 383-7505.			
CR-2 Section 5097.98 of the Public Resources Code and Section 7050.5 of the California Health and Safety Code protect Native American burials, skeletal remains and grave goods, regardless of age and provide method and means for the appropriate handling of such remains. If human remains are encountered, work should halt in that vicinity and the county coroner should be notified immediately. At the same time, an archaeologist should be contacted to evaluate the situation. If the		Standard on Projects.	RE/Contractor	Construction	Standard Specifications 2010: Section: 14-2.02A Archeological Resources: General. Health & Safety Code 7050.5 & Public Resource Code 5097		Contact Gabrielle Duff (909) 383-6933 or Gary Jones (909) 383-7505.			

Date: 11-25-14
CEQA/NEPA
CE/CE
Project Phase:
☒ PA/ED (*DED/FED*)
☐ PS&E Submittal
☐ Construction

ENVIRONMENTAL COMMITMENTS RECORD

The Rehabilitation and Widening of the Existing Bridge on Bear Valley Road over the Burlington Northern Santa Fe Railroad.

08-SBd-City of Victorville
Fed ID: BHLS 5380 026

Avoidance, Minimization, and/or Mitigation Measures	Page # in Env. Doc.	Environmental Analysis Source (Technical Study, Environmental Document, and/or Technical Discipline)	Responsible for Development and/or Implementation of Measure	Timing/ Phase	If applicable, corresponding construction provision: (standard, special, non-standard)	Action(s) Taken to Implement Measure	Measure Completed (Date and Initials)	Remarks	Environmental Compliance	
									YES	NO
human remains are of Native American origin, the coroner must notify the Native American Heritage Commission within 24 hours of such identification who will then notify the Most Likely Descendent (MLD). The person who discovered the remains will contact the District 8 Division of Environmental Planning; Gabrielle Duff, DEBC: (909)383-6933 and Gary Jones, DNAC: (909)383-7505, California Department of Transportation, District 8, so that they may work with the MLD on the respectful treatment and disposition of the remains. Further provisions of PRC 5097.98 are to be followed as applicable.										
Air Quality										
AQ-1: Use periodic watering for short-term stabilization of Disturbed Surface Area to minimize	55	Air Quality Report	RE/Contractor	Construction						

Date: 11-25-14
CEQA/NEPA
CE/CE
Project Phase:
☒ PA/ED (*DED/FED*)
☐ PS&E Submittal
☐ Construction

ENVIRONMENTAL COMMITMENTS RECORD

The Rehabilitation and Widening of the Existing Bridge on Bear Valley Road over the Burlington Northern Santa Fe Railroad.

08-SBd-City of Victorville
Fed ID: BHLS 5380 026

Avoidance, Minimization, and/or Mitigation Measures	Page # in Env. Doc.	Environmental Analysis Source (Technical Study, Environmental Document, and/or Technical Discipline)	Responsible for Development and/or Implementation of Measure	Timing/ Phase	If applicable, corresponding construction provision: (standard, special, non-standard)	Action(s) Taken to Implement Measure	Measure Completed (Date and Initials)	Remarks	Environmental Compliance	
									YES	NO
visible fugitive dust emissions. Use of a water truck to maintain moist disturbed surfaces and actively spread water during visible dusting episodes shall be considered sufficient to maintain compliance.										
AQ-2: Take actions sufficient to prevent project-related trackout, or visible bulk material deposited upon public roadways as a result of active operations.	55	Air Quality Report	RE/Contractor	Construction						
AQ-3: Cover loaded haul vehicles while operating on publicly maintained paved surfaces.	55	Air Quality Report	RE/Contractor	Construction						
AQ-4: Stabilize graded site surfaces upon completion of grading when subsequent development is delayed or expected to be delayed more than thirty days, except when such a delay is due to precipitation	55	Air Quality Report	RE/Contractor	Construction						

Date: 11-25-14
CEQA/NEPA
CE/CE
Project Phase:
☒ PA/ED (*DED/FED*)
☐ PS&E Submittal
☐ Construction

ENVIRONMENTAL COMMITMENTS RECORD

The Rehabilitation and Widening of the Existing Bridge on Bear Valley Road over the Burlington Northern Santa Fe Railroad.

08-SBd-City of Victorville
Fed ID: BHLS 5380 026

Avoidance, Minimization, and/or Mitigation Measures	Page # in Env. Doc.	Environmental Analysis Source (Technical Study, Environmental Document, and/or Technical Discipline)	Responsible for Development and/or Implementation of Measure	Timing/ Phase	If applicable, corresponding construction provision: (standard, special, non-standard)	Action(s) Taken to Implement Measure	Measure Completed (Date and Initials)	Remarks	Environmental Compliance	
									YES	NO
that dampens the disturbed surface sufficiently to eliminate visible fugitive dust emissions.										
AQ-5: Cleanup project-related trackout or spills on publicly maintained paved surfaces within 24 hours.	55	Air Quality Report	RE/Contractor	Construction						
AQ-6: Reduce non-essential earth-moving activity (i.e. grading, cut/fill) under high wind conditions. Wind gusts that exceed 25 mph or, on an hourly average, when wind speeds exceed 15 mph are considered high winds. A reduction in earth-moving activity when visible dusting occurs from moist and dry surfaces due to wind erosion shall be considered sufficient to maintain compliance.	55	Air Quality Report	RE/Contractor	Construction						

Date: 11-25-14
CEQA/NEPA
CE/CE
Project Phase:
☒ PA/ED (*DED/FED*)
☐ PS&E Submittal
☐ Construction

ENVIRONMENTAL COMMITMENTS RECORD

The Rehabilitation and Widening of the Existing Bridge on Bear Valley Road over the Burlington Northern Santa Fe Railroad.

08-SBd-City of Victorville
Fed ID: BHLS 5380 026

Avoidance, Minimization, and/or Mitigation Measures	Page # in Env. Doc.	Environmental Analysis Source (Technical Study, Environmental Document, and/or Technical Discipline)	Responsible for Development and/or Implementation of Measure	Timing/ Phase	If applicable, corresponding construction provision: (standard, special, non-standard)	Action(s) Taken to Implement Measure	Measure Completed (Date and Initials)	Remarks	Environmental Compliance	
									YES	NO
AQ-7 The Contractor must Implement and follow Fugitive Dust Control Best Management Practices (BMP's).		Standard on Projects.	RE/Contractor	Construction	Standard Specifications 2010: Section 14-9: Air Quality					
AQ-8 Implement and follow Erosion Control and Air Quality Best Management Practices (BMPs).		Standard on Projects.	RE/Contractor	Construction	Standard Specifications 2010: Section 14-9: Air Quality, Section 13: Water Pollution Control and Section 21: Erosion Control.					
CC-1: The project would incorporate the use of energy-efficient lighting, such as light emitting diode (LED) traffic signals. LED bulbs cost $60 to $70 each, but last five to six years, compared to the one-year average lifespan of the incandescent bulbs previously used. The LED bulbs themselves consume 10 percent of the electricity of	55 & 56	Air Quality Report	RE/Contractor	Construction						

Date: 11-25-14
CEQA/NEPA
CE/CE
Project Phase:
☒ PA/ED (*DED/FED*)
☐ PS&E Submittal
☐ Construction

ENVIRONMENTAL COMMITMENTS RECORD

The Rehabilitation and Widening of the Existing Bridge on Bear Valley Road over the Burlington Northern Santa Fe Railroad.

08-SBd-City of Victorville
Fed ID: BHLS 5380 026

Avoidance, Minimization, and/or Mitigation Measures	Page # in Env. Doc.	Environmental Analysis Source (Technical Study, Environmental Document, and/or Technical Discipline)	Responsible for Development and/or Implementation of Measure	Timing/ Phase	If applicable, corresponding construction provision: (standard, special, non-standard)	Action(s) Taken to Implement Measure	Measure Completed (Date and Initials)	Remarks	Environmental Compliance	
									YES	NO
traditional lights, which will also help reduce the project's CO2 emissions.										
CC-2: According to the Department's Standard Specifications, the contractor must comply with all local Air Quality Management District rules, ordinances, and regulations for air quality restrictions.	56	Air Quality Report	RE/Contractor	Construction						
Noise										
Noise-1 **The contractor shall comply with all local sound control and noise level rules, regulations and ordinances that apply to any work performed pursuant to contract.**		Standard on Projects.	RE/Contractor	Construction	Standard Specifications 2010: Section 14-8.02: Noise and Vibration.					
Noise-2 **Each internal combustion engine, used for any purpose on the job or related to the job,**		Standard on Projects.	RE/Contractor	Construction	Standard Specifications 2010: Section 14-8.02: Noise and Vibration.					

Date: 11-25-14
CEQA/NEPA
CE/CE
Project Phase:
☒ PA/ED (*DED/FED*)
☐ PS&E Submittal
☐ Construction

ENVIRONMENTAL COMMITMENTS RECORD

The Rehabilitation and Widening of the Existing Bridge on Bear Valley Road over the Burlington Northern Santa Fe Railroad.

08-SBd-City of Victorville
Fed ID: BHLS 5380 026

Avoidance, Minimization, and/or Mitigation Measures	Page # in Env. Doc.	Environmental Analysis Source (Technical Study, Environmental Document, and/or Technical Discipline)	Responsible for Development and/or Implementation of Measure	Timing/ Phase	If applicable, corresponding construction provision: (standard, special, non-standard)	Action(s) Taken to Implement Measure	Measure Completed (Date and Initials)	Remarks	Environmental Compliance	
									YES	NO
shall be equipped with a muffler of a type recommend by the manufacturer. No internal combustion engine shall be operated on the project without the muffler.										
Hazardous Waste										
HAZ-1: An asbestos containing materials and lead containing paint survey of the bridge structure will be required to obtain permits for the bridge demolition/modification, and should be performed prior to construction.	9	Initial Site Assessment	RE/Contractor	Construction						
HAZ-2: Underground Service Alert should be contacted for utility relocation.	9	Initial Site Assessment	RE/Contractor	Construction						

Date: 11-25-14
CEQA/NEPA
CE/CE
Project Phase:
☒ PA/ED (*DED/FED*)
☐ PS&E Submittal
☐ Construction

ENVIRONMENTAL COMMITMENTS RECORD

The Rehabilitation and Widening of the Existing Bridge on Bear Valley Road over the Burlington Northern Santa Fe Railroad.

08-SBd-City of Victorville
Fed ID: BHLS 5380 026

Avoidance, Minimization, and/or Mitigation Measures	Page # in Env. Doc.	Environmental Analysis Source (Technical Study, Environmental Document, and/or Technical Discipline)	Responsible for Development and/or Implementation of Measure	Timing/ Phase	If applicable, corresponding construction provision: (standard, special, non-standard)	Action(s) Taken to Implement Measure	Measure Completed (Date and Initials)	Remarks	Environmental Compliance	
									YES	NO
HAZ-3: If soil is to be exported from the site, the analytical data and a generator waste profile will be submitted to the potential recipient for review and approval prior to shipping any soil off-site.	3	Site Investigation Report	RE/Contractor	Construction						
Community Impact										
COM-1: **Emergency vehicle access would be maintained through traffic control and/or stage construction.**		Implemented by the City of Victorville and their Consultant.	RE/Contractor	Construction						
Water Quality										
WQ-1: For disturbed areas exceeding 1 acre national Pollutant Discharge Elimination System guidelines necessitate the development of a Strom Water Pollution Prevention Plan (SWPPP), unless the project qualifies for the EPA Small Construction Erosivity Waiver (SCEW), by the contractor. In the case the project qualifies for the SCEW, a Water Pollution		Implemented by the City of Victorville and their Consultant.	RE/Contractor	Construction						

Date: 11-25-14
CEQA/NEPA
CE/CE
Project Phase:
☒ PA/ED (*DED/FED*)
☐ PS&E Submittal
☐ Construction

ENVIRONMENTAL COMMITMENTS RECORD

The Rehabilitation and Widening of the Existing Bridge on Bear Valley Road over the Burlington Northern Santa Fe Railroad.

08-SBd-City of Victorville
Fed ID: BHLS 5380 026

Avoidance, Minimization, and/or Mitigation Measures	Page # in Env. Doc.	Environmental Analysis Source (Technical Study, Environmental Document, and/or Technical Discipline)	Responsible for Development and/or Implementation of Measure	Timing/ Phase	If applicable, corresponding construction provision: (standard, special, non-standard)	Action(s) Taken to Implement Measure	Measure Completed (Date and Initials)	Remarks	Environmental Compliance	
									YES	NO
Control Plan would be prepared in-lieu of the SWPPP to determine minimum control requirements.										
WQ-2: Best Management Practices (BMPs) would be implemented. BMPs include any facilities and methods used to remove, reduce, or prevent storm water runoff pollutants from entering receiving waters. Erosion control methods, temporary and permanent BMPs, and continuity of drainage facilities along the roadway would minimize impacts from storm water runoff. The SWPPP and NPDES-compliant measures would ensure no adverse impacts would occur to water quality associated with the project. Specific methods will include, but are not limited to: • Watering • Outlet Protection/Velocity		Implemented by the City of Victorville and their Consultant.	RE/Contractor	Construction						

Date: 11-25-14
CEQA/NEPA
CE/CE
Project Phase:
☒ PA/ED (*DED/FED*)
☐ PS&E Submittal
☐ Construction

ENVIRONMENTAL COMMITMENTS RECORD

The Rehabilitation and Widening of the Existing Bridge on Bear Valley Road over the Burlington Northern Santa Fe Railroad.

08-SBd-City of Victorville
Fed ID: BHLS 5380 026

Avoidance, Minimization, and/or Mitigation Measures	Page # in Env. Doc.	Environmental Analysis Source (Technical Study, Environmental Document, and/or Technical Discipline)	Responsible for Development and/or Implementation of Measure	Timing/ Phase	If applicable, corresponding construction provision: (standard, special, non-standard)	Action(s) Taken to Implement Measure	Measure Completed (Date and Initials)	Remarks	Environmental Compliance	
									YES	NO
Dissipation Devices • **Geotextiles, Plastic Covers & Erosion Control Blankets/Mats**										
Biological Resources										
BIO-1: **Prior to construction, a rare plant focused survey shall be conducted for desert cymopterus, sagebrush loeflingia, and beaver dam breadroot. Surveys should be conducted for cymopterus during April, sagebrush loeflingia during April-May, and beaver dam breadroot during April-May. Should surveys determine the presence of sensitive species within the BSA, specimens shall be ESA fenced or relocated as determined by the appropriate regulatory agency.**	5	NES(MI)	RE/Contractor	Construction						
BIO-2: **Erosion control or landscaping for this project shall not contain invasive species in the plant selections or seed mixtures.**	6	NES(MI)	RE/Contractor	Construction						

Date: 11-25-14
CEQA/NEPA
CE/CE
Project Phase:
☒ PA/ED (*DED/FED*)
☐ PS&E Submittal
☐ Construction

ENVIRONMENTAL COMMITMENTS RECORD

The Rehabilitation and Widening of the Existing Bridge on Bear Valley Road over the Burlington Northern Santa Fe Railroad.

08-SBd-City of Victorville
Fed ID: BHLS 5380 026

Avoidance, Minimization, and/or Mitigation Measures	Page # in Env. Doc.	Environmental Analysis Source (Technical Study, Environmental Document, and/or Technical Discipline)	Responsible for Development and/or Implementation of Measure	Timing/ Phase	If applicable, corresponding construction provision: (standard, special, non-standard)	Action(s) Taken to Implement Measure	Measure Completed (Date and Initials)	Remarks	Environmental Compliance	
									YES	NO
Construction equipment shall be cleaned before mobilizing to arrive at the project site and before leaving the project site.										
BIO-3: After completion of the project, all areas subject to temporary ground disturbances, including storage and staging areas, temporary roads, etc. must be returned to pre-construction conditions, and revegetated with native seeds to promote restoration of the area.	6	NES(MI)	RE/Contractor	Construction						
BIO-4: A preconstruction survey shall be conducted to find nesting birds and/or active burrowing owl burrows within a 500-feet-wide buffer zone around any potentially suitable habitat that will be used during construction activities. The burrowing owl survey shall be conducted in accordance to the CDFW Staff Report on Burrowing Owl Mitigation (CDFG 2012).	6	NES(MI)	RE/Contractor	Construction						
BIO-5: Project-related vehicles will observe a 20-mph speed limit in	6	NES(MI)	RE/Contractor	Construction						

Date: 11-25-14
CEQA/NEPA
CE/CE
Project Phase:
☒ PA/ED (*DED/FED*)
☐ PS&E Submittal
☐ Construction

ENVIRONMENTAL COMMITMENTS RECORD

The Rehabilitation and Widening of the Existing Bridge on Bear Valley Road over the Burlington Northern Santa Fe Railroad.

08-SBd-City of Victorville
Fed ID: BHLS 5380 026

Avoidance, Minimization, and/or Mitigation Measures	Page # in Env. Doc.	Environmental Analysis Source (Technical Study, Environmental Document, and/or Technical Discipline)	Responsible for Development and/or Implementation of Measure	Timing/ Phase	If applicable, corresponding construction provision: (standard, special, non-standard)	Action(s) Taken to Implement Measure	Measure Completed (Date and Initials)	Remarks	Environmental Compliance	
									YES	NO
all project areas, except on formalized roads. Off-road traffic outside of designated project areas should be prohibited.										
BIO-6: The project boundaries near the unnammed tributary shall be staked with a ESA fencing on the project-side of the channel to ensure equipment does not encroach into the channel.	6	NES(MI)	RE/Contractor	Construction						
Biological Permits										
NPDES	6	NES(MI)	RE/Contractor	Construction						

EXHIBIT 4

Mitigated Negative Declaration and
Mitigation Monitoring & Reporting Program

Bear Valley Road Overhead at BNSF Railroad Project

CITY OF VICTORVILLE
SAN BERNARDINO COUNTY, CALIFORNIA

Initial Study with Mitigated Negative Declaration

Prepared by the City of Victorville

November 2014

THIS PAGE LEFT BLANK INTENTIONALLY

INITIAL STUDY
ENVIRONMENTAL CHECKLIST FORM

1. **Project title:** Bear Valley Road Overhead at BNSF Railroad Project

2. **Lead agency name and address:** City of Victorville Public Works Division, 14343 Civic Drive, Victorville, CA 92392-2399.

3. **Contact person and phone number:** Brian Gengler, PE, City Engineer (760) 955-5156.

4. **Project location:** Along Bear Valley Road, from 300 feet west of Industrial Boulevard to approximately 400 feet east of Ridgecrest Road, over the Burlington Northern Santa Fe (BNSF) Railroad. See Figure 1 and 2 for Project Vicinity and Location, respectively.

5. **Project sponsor's name and address:** Brian Gengler, PE, City of Victorville Public Works Division, 14343 Civic Drive, Victorville, CA 92392-2399

6. **General plan designation:** Commercial, Industrial, and Residential

7. **Zoning:** North side of Bear Valley Road: Commercial Manufacturing (C-M), General Commercial (C-2T), Neighborhood Retail (C-1T) and Industrial (M-1). South side of Bear Valley Road: General Commercial (C2), High Density Residential (R-3), General Industrial (I2).

8. **Description of project:** The City of Victorville proposes to widen the Bear Valley Road Overhead at the Burlington Northern Santa Fe (BNSF) Railroad crossing. The proposed project consists of rehabilitating, retrofitting, and widening the existing bridge which carries Bear Valley Road over the BNSF Railroad in order to meet current AASHTO safety standards and Super Arterial standard roadway configurations set forth by the City of Victorville. See Figure 3 for Build Alternative Exhibit. The project is located along Bear Valley Road, between Industrial Boulevard and Ridgecrest Road, approximately 3.8 miles east of I-15.

   The project would widen, retrofit, and rehabilitate the existing bridge on Bear Valley Road. The bridge would be widened 32.25 feet to accommodate the construction of 5-foot-wide sidewalks, 8-foot wide shoulders, and a 12-foot wide median, required for all Super Arterials within the City of Victorville. Retrofitting the bridge would involve seismic retrofits and construction of pier protection walls (crash walls). Rehabilitation of the bridge would require sealing of the deck with methacrylate resin, patching holes, and sealing cracks in the concrete slope protection located near the abutments.

   Additional improvements would include widening the roadway approaches to accommodate the widened bridge, modification of the traffic signals at Industrial Boulevard and Ridgecrest Road, and increasing the left-turn vehicle storage capacity at the Ridgecrest Road intersection.

   The project is anticipated to take 12 months of construction. Minor partial acquisitions are anticipated. Temporary construction easements or right of entries and utility relocation will be required. The project construction limits are located from approximately 300 feet west of Industrial Boulevard to approximately 400 feet east of Ridgecrest Road. The total length of the proposed project is approximately 0.5 miles.

9. **Surrounding land uses and setting:** The proposed project area is bordered on the north by Commercial Manufacturing (C-M), General Commercial (C-2T), Neighborhood Retail (C-1T) and Industrial (M-1); and on the south by General Commercial (C2), High Density Residential (R-3), General Industrial (I2). Project activities are mostly in the right-of-way of the existing roads which are paved and disturbed. Most of the previously existing natural vegetation and wildlife habitat

has been displaced by roadways and other developed land uses. The small amount of vegetation present largely consists of disturbed desert scrub/sagebrush scrub communities and non-native ruderal vegetation on disturbed soils.

10. **Other public agency whose approval is required:**

State Water Resources Control Board

National Pollutant Discharge Elimination System (NPDES) General Permit for Discharges of Storm Water Associated with Construction Activity (Construction General Permit Order 2009-0009-DWQ).

Burlington Northern Santa Fe (BNSF) Railroad

An Encroachment Permit will be obtained as a condition of the Construction and Maintenance Agreement between the BNSF Railroad and the City of Victorville.

ENVIRONMENTAL FACTORS POTENTIALLY AFFECTED:

The environmental factors checked below would be potentially affected by this project, involving at least one impact that is a "Potentially Significant Impact" as indicated by the checklist on the following pages.

	Land Use/Planning		Biological Resources		Aesthetics
	Population/Housing		Mineral Resources		Cultural Resources
	Geology/Soils		Hazards & Hazardous Materials		Recreation
	Hydrology/Water Quality		Noise		Greenhouse Gas Emissions
	Air Quality		Public Services		Agriculture Resources
	Transportation/Traffic		Utilities/Service Systems		Mandatory Findings of Significance

DETERMINATION:

On the basis of this initial evaluation:

__ I find that the proposed project COULD NOT have significant effect on the environment, and a NEGATIVE DECLARATION will be prepared.

X I find that although the proposed project could have a significant effect on the environment, there will not be a significant effect in this case because the mitigation measures described on an attached sheet have been added to the project. A NEGATIVE DECLARATION will be prepared.

__ I find that the proposed project MAY have a significant effect on the environment, and an ENVIRONMENTAL IMPACT REPORT is required.

__ I find that the proposed project MAY have a significant effect(s) on the environment, but at least one effect 1) has been adequately analyzed in an earlier document pursuant to applicable legal standards, and 2) has been addressed by mitigation measures based on the earlier analysis as described on attached sheets, if the effect is a "potentially significant impact" or "potentially significant unless mitigated". An ENVIRONMENTAL IMPACT REPORT is required, but it must analyze only the effects that remain to be addressed.

__ I find that the proposed project WILL NOT have a significant effect on the environment, because no new potentially significant effects have been identified beyond those previously analyzed adequately in an earlier EIR, pursuant to applicable standards, and no additional mitigation measures beyond those imposed as part of that previous EIR are necessary to be imposed upon the proposed project to reduce mitigable impacts to a insignificant level. Therefore, no additional environmental documentation is necessary.

Signature: _____ Date: _____

Brian Gengler, PE, City Engineer

For: City of Victorville Public Works Department

EVALUATION OF ENVIRONMENTAL IMPACTS:

1) A brief explanation is provided for all answers except "No Impact" answers that are adequately supported by the information sources the lead agency cites in the parentheses following each question. A "No Impact" answer is adequately supported if the referenced information sources show that the impact simply does not apply to projects like the one involved (e.g., the project falls outside a fault rupture zone). A "No Impact" answer is explained where it is based on project-specific factors as well as general standards (e.g., the project will not expose sensitive receptors to pollutants, based on a project-specific screening analysis).

2) All answers take account of the whole action involved, including off-site as well as on-site, cumulative as well as project-level, indirect as well as direct, and construction as well as operational impacts.

3) "Potentially Significant Impact" is noted if there is substantial evidence that an effect is significant. If there are one or more "Potentially Significant Impact" entries when the determination is made, an EIR is required.

4) "Negative Declaration: Less Than Significant With Mitigation Incorporated" applies where the incorporation of mitigation measures has reduced an effect from "Potentially Significant Impact" to a "Less Than Significant Impact". The lead agency describes the mitigation measures, and briefly explains how they reduce the effect to a less than significant level (mitigation measures from Section XVII, "Earlier Analyses", may be cross-referenced).

5) Earlier analyses may be referenced where, pursuant to the tiering, program EIR, or other CEQA process, an effect has been adequately analyzed in an earlier EIR or negative declaration. Section 15063(c)(3)(D). In this case, a brief discussion should identify the following:

a) Earlier Analysis Used. Identify and state where they are available for review.

b) Impacts Adequately Addressed. Identify which effects from the above checklist were within the scope of and adequately analyzed in an earlier document pursuant to applicable legal standards, and state whether such effects were addressed by mitigation measures based on earlier analysis.

c) Mitigation Measures. For effects that are “Less Than Significant with Mitigation Measures Incorporated,” describe the mitigation measures which were incorporated or refined from the earlier document and the extent to which they address site-specific conditions for the project.

6) The lead agency incorporates into the checklist references to information sources for potential impacts (e.g., general plans, zoning ordinances). Reference to a previously prepared or outside document should, where appropriate, includes a reference to the page or pages where the statement is substantiated.

7) Supporting Information Sources: A source list should be attached, and other sources used or individuals contacted should be cited in the discussion.

8) The explanation of each issue should identify:

a) The significance criteria or threshold, if any, used to evaluate each question; and

b) The mitigation measure identified, if any, to reduce the impact to less than significance.

Source: ESRI 2013; Dokken Engineering3/28/2014; Created By: cherryz

J:\2007_Bear_Vly_BR_Widen\200_Proj_Dev\230_Envirt\Maps_Exhibits\F1_BearValley_Vicinity.mxd

0 25 50 Miles

FIGURE 1
Project Vicinity
Federal Project Number BHLS-5380 (026)
Bear Valley Road Overhead at BNSF Railroad
City of Victorville, San Bernardino County, California

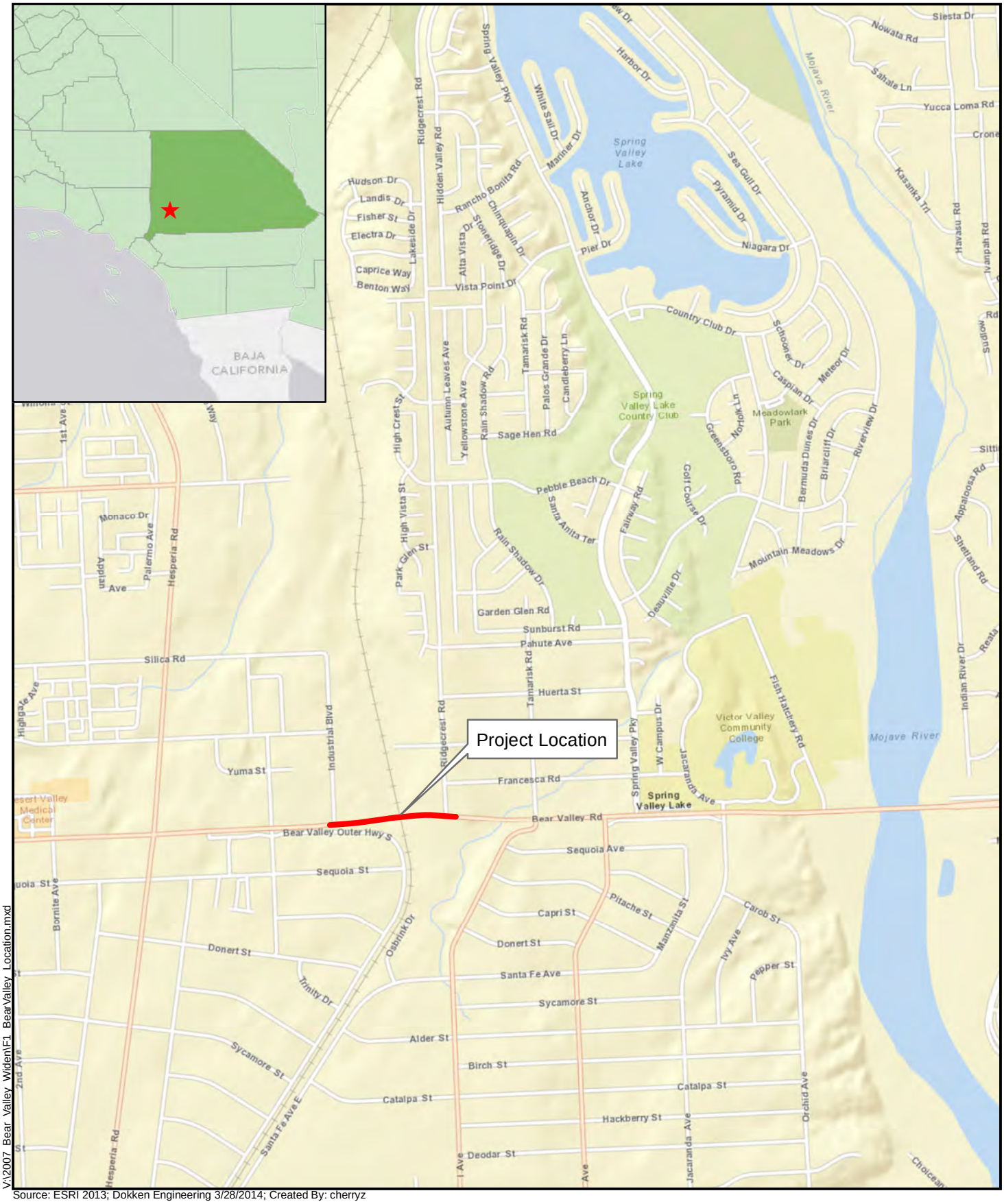

Source: ESRI 2013; Dokken Engineering 3/28/2014; Created By: cherryz

V:\2007_Bear_Valley_Widen\F1_BearValley_Location.mxd

0 0.25 0.5 0.75 1 Miles

FIGURE 2
Project Location
Federal Project Number BHLS-5380 (026)
Bear Valley Road Overhead at BNSF Railroad
City of Victorville, San Bernardino County, California

V:\2007_Bear_Valley_Widen\F3_BuildAlternative.mxd

Source: ESRI 2013 11/18/2013; Created By: jamesh

0 250 500 750 1,000 Feet

FIGURE 3
Build Alternative

Federal Project Number BHLS-5380 (026)
Bear Valley Road Overhead at BNSF Railroad
City of Victorville, San Bernardino County, California

THIS PAGE LEFT BLANK INTENTIONALLY

ENVIRONMENTAL IMPACTS:

I. **AESTHETICS.** *Would the proposal*:	*Potentially Significant Impact*	*Less Than Significant w/Mitigation Incorporated*	*Less Than Significant Impact*	*No Impact*
a) Have a substantial adverse effect on a scenic vista? (3)			X	
b) Substantially damage scenic resources, including, but not limited to, trees, rock outcroppings, and historic buildings within a state scenic highway? (1; 2;3)			X	
c) Substantially degrade the existing visual character or quality of the site and its surroundings? (2)			X	
d) Create a new source of substantial light or glare which would adversely affect day or nighttime views in the area?		X		

Explanations:

a. **Less Than Significant Impact** – The project would have less than a substantial adverse effect on a scenic vista. The General Plan mentions scenic vistas of the mountains surrounding the Victor Valley. While lighting may be added to the overhead, these would be minor and would not block views of the mountains. Further, the visual horizon would not be adversely affected since the proposed bridge will be built at the same height as the existing.

b. **Less Than Significant Impact** – As noted above, the City of Victorville's General Plan Resource Element recognizes the protection of local scenic resources as necessary for maintaining the overall livability and aesthetic qualities of the City. However, the project area is primarily disturbed by either development or grading activities and there are not any identifiable scenic resources in the immediate area. Bear Valley Road is not a designated State or County scenic highway or National scenic byway (1). The BNSF railroad is a potentially historic property within the construction area, but it will not be impacted by the project (2). No trees or rock outcroppings are at the project surroundings.

c. **Less Than Significant Impact** – The project would have less than substantial effect on the existing visual character or quality of the site and its surroundings. The commercial, industrial, and small amount of residential existing land uses within the plan area would not change. The bridge would be widened a total of 32.25 feet to accommodate the construction of 5-foot wide sidewalks, 8-foot wide shoulders, and a 12-foot wide median, required for all Super Arterials. While there will be a visual difference between the existing and proposed bridge, the character of Bear Valley Road would remain transportation-oriented and largely commercial/industrial.

d. **Less Than Significant Impact with Mitigation Incorporated** – Lighting would be increased along Bear Valley Road. Lighting would be placed with approixametely150-foot spacing on alternate sides of the road. Cut-off lights which direct light to the ground would be used, following Measure AES-1,to mitigate potential light pollution.

<u>Avoidance, Minimization, and/or Mitigation Measures</u>

- **AES-1**: Cut-off lights that direct light to the ground will be used to reduce light pollution.

II. **AGRICULTURE AND FOREST RESOURCES.** *Would the proposal*:	*Potentially Significant Impact*	*Less Than Significant w/Mitigation Incorporated*	*Less Than Significant Impact*	*No Impact*
a) Convert Prime Farmland, Unique Farmland, or Farmland of Statewide Importance (Farmland), as shown on the maps prepared pursuant to the Farmland Mapping and Monitoring Program of the California Resources Agency, to non-agricultural use? (4)				X
b) Conflict with existing zoning for agricultural use, or a Williamson Act contract? (5, 6)				X
c) Conflict with existing zoning for, or cause rezoning of, forest land (as defined in Public Resources Code section 12220(g)), timberland (as defined by Public Resources Code section 4526), or timberland zoned Timberland Production (as defined by Government Code section 51104(g))? (5, 6, 7)				X
d) Result in the loss of forest land or conversion of forest land to non-forest use? (5)				X
e) Involve other changes in the existing environment which, due to their location or nature, could result in conversion of Farmland, to non-agricultural use or conversion or forest land to non-forest use? (3, 5)				X

Explanations:

a.-e. **No Impact** – The site is not listed as Prime Farmland, Unique Farmland or Farmland of Statewide Importance (4). Additionally, the site and all surrounding properties are within an urbanized area (6, Section 21071), and no forest land or farmland is located in the vicinity that may be affected by the development of this project.

III. **AIR QUALITY.** *Would the proposal*:	*Potentially Significant Impact*	*Less Than Significant w/Mitigation Incorporated*	*Less Than Significant Impact*	*No Impact*
a) Conflict with or obstruct implementation of the applicable air quality plan? (3)			X	
b) Violate any air quality standard or contribute substantially to an existing or projected air quality violation? (3; 8)		X		
c) Result in a cumulatively considerable net increase of any criteria pollutant for which the project region is non-attainment under an applicable federal or state ambient air quality standard (including releasing emissions which exceed quantitative thresholds for ozone precursors)? (3; 8; 10)			X	
d) Expose sensitive receptors to substantial pollutant concentrations? (8; 9)			X	
e) Create objectionable odors affecting a substantial number of people?				X

Explanations:

a. **Less Than Significant Impact** – The project would not conflict with the applicable air quality plan. An Air Quality Report (2014) was prepared to discuss the project's transportation air quality conformity, including regional and project-level conformity. The analysis for regional and project-level conformity are discussed below:

Regional Conformity

The project is listed in the Southern California Area of Governments (SCAG) 2013 Federal Transportation Improvement Program (FTIP) and 2012-2035 Regional Transportation Plan (RTP). In both the FTIP and RTP, the project identification number is 200866 and the project description is as follows:

> BRIDGE NO 54C0547, BEAR VALLEY RD. OVER BNSF RAILWAY, AMTRAK 7 UP RR, 3.8 MILES E. OF I-15. WIDEN 6 LANE BRIDGE TO 7 LANE BRIDGE FOR MEDIAN TURN LANE AND SEISMICALLY RETROFITTING BRIDGE.

As a project included in the FTIP and RTP, the project meets regional conformity requirements.

Project-Level Conformity

The proposed project is located within the Mojave Desert Air Basin in the region administered by the Mojave Desert Air Quality Management District (MDAQMD). As discussed in the Air Quality Report (2014), the proposed project is in an area that is in federal nonattainment for 8-hour 03 and PM10, therefore it is not exempt from project-level/local conformity analyses. The MDAQMD has adopted federal attainment plans for ozone and PM10.

Local CO—As discussed in the Air Quality Report (2014), the results of the Local CO Analysis flowchart and Section 4 of the CO Protocol are below:

Level 1

Is the project in a CO nonattainment area? No. The project is located in a CO attainment area.

Was the area re-designated as “attainment” after the 1990 Clean Air Act? No. The area was not re-designated as “attainment” after the 1990 CAA. (Proceed to Level 7)

Level 7

Does project worsen air quality? No. The project does not worsen air quality, in that it does not increase the percentage of vehicles operating in cold start mode, significantly increase traffic volumes, or worsen traffic flow.

CO Hotspot Analysis—In addition, the potential for CO “hot spots” was evaluated. CO “hot spots” are typically evaluated when (a) the LOS of an intersection or roadway decreases to a LOS D or worse; and (b) sensitive receptors such as residences, commercial developments, schools, hospitals, etc. are located in the vicinity of the affected intersection or roadway segment. The project would not cause a decrease to LOS D at the study intersections.

PM10 and PM2.5 Hotspot Analysis—Regarding PM10 and PM2.5, the U.S. Environmental Protection Agency (EPA) does not require hot-spot analyses, qualitative or quantitative, for projects that are not a project of air quality concern (POAQC) (i.e. not listed in 40 CFR 93.123(b)). On March 25, 2014, the SCAG Transportation Conformity Working Group (TCWG) reviewed the project and found it not a POAQC.

b. **Less Than Significant Impact with Mitigation Incorporated** – The project would not violate any air quality standards or contribute to an existing or project air quality violation. While San Bernardino County is in a non-attainment area for Ozone and Particulate Matter (PM) under the National Ambient Air Quality Standards (NAAQS) and California Ambient Air Quality Standards (CAAQS), long-term operational emissions would meet transportation air quality conformity requirements as demonstrated in answer “a” above.

   Short-term construction emissions would result in some amount of dust emissions and would have a potential to affect PM. Construction emissions were calculated using the Roadway Construction Emissions Model, Version 7.1.5.1, and as summarized in Table 1, the project does not exceed the CEQA thresholds established by the Mojave Desert Air Quality Management District (MDAQMD). To mitigate for the potential dust emissions, measure AQ-1 would be implemented.

c. **Less Than Significant Impact** – Please see answers “a” and “b” for further information.

d. **Less Than Significant Impact** – Substantial pollutant concentrations are not anticipated. Based on the map of naturally-occurring asbestos locations (9), no ultramafic rock formations are found in San Bernardino County. Therefore, the proposed project does not anticipate the release of naturally-occurring asbestos.

   During construction, short-term degradation of air quality may occur due to the release of particulate emissions (airborne dust also referred to as PM_{10}) generated by excavation, grading, hauling, and other activities related to construction. Emissions from construction equipment also are anticipated and could include carbon monoxide (CO), nitrogen oxides (NO_x), volatile organic compounds (VOCs), directly-emitted particulate matter (PM_{10} and $PM_{2.5}$), and toxic air contaminants such as diesel exhaust particulate matter. Ozone is a regional pollutant that is derived from NO_x and VOCs in the presence of sunlight and heat.

As shown in Table 1, construction emissions were calculated to be well below that of MDAQMD significance thresholds.

Table 1: Evaluation of Construction Emissions

Pollutant	MDAQMD Air Quality Daily Significance Thresholds	Project Construction (lbs/day)	Significant Impact?/Above MDAQMD Threshold?
CO	548 lbs/day	57.1	No
NO_x	137 lbs/day	127.3	No
VOC	137 lbs/day	11.6	No
SO_x	137 lbs/day	0.01*	No
PM_{10}	82 lbs/day	55.9	No
$PM_{2.5}$	82 lbs/day	15.8	No
Lead	3 lbs/day	**	**

Notes: Modeled using Road Construction Emissions Model, Version 7.1.5.1. Construction emissions assuming 15 acres of general project site, project length of 0.5 mi, and construction starting 2015 and lasting 12 months. MDAQMD Air Quality Daily Significance Thresholds obtained from MDAQMD California Environmental Quality Act (CEQA) and Federal Conformity Guidelines (August 2011)

* SO_x modeled using URBEMIS 2007

**Information not available.

Heavy trucks and construction equipment powered by gasoline and diesel engines would generate CO, SO_2, NO_x, VOCs and some particulate matter in exhaust emissions. If construction activities were to increase traffic congestion in the area, CO and other emissions from traffic would increase slightly while those vehicles are delayed. These emissions would be temporary and limited to the immediate area surrounding the construction site.

Dust generated would result in a temporary, local impact, limited to areas of construction. Dust control practices would be incorporated into the project to mitigate this potential impact.

Each of the above impacts are construction related, temporary, and with inclusion of air quality best management practices (BMPs) consistent with the requirements of the MDAQMD, and further, MDPA, as stated in Measure AQ-1, these impacts would be reduced to a less than significant level.

e. **No Impact** – The proposal does not include any development or include any land uses that would create objectionable odors affecting a substantial number of people.

Avoidance, Minimization, and/or Mitigation Measures

The following measure would be implemented as part of the project to minimize short term construction related air quality emissions:

- **AQ-1:** In accordance with MDPA PM_{10} Plan, control measures to be implemented when construction/demolition activities disturb at least ½ acre are as follows:
    - Use water for short-term surface stabilization
    - Minimize trackout onto paved roads
    - Cover haul trucks
    - Stabilize (chemical or vegetation) site upon completion of grading when subsequent development is delayed
    - Rapid cleanup of project-related trackout or spills on paved roads
    - Minimize grading and soil movement when winds exceed 30 miles per hour

IV. BIOLOGICAL RESOURCES. *Would the proposal result in impacts to*:	*Potentially Significant Impact*	*Less Than Significant w/Mitigation Incorporated*	*Less Than Significant Impact*	*No Impact*
a) Have a substantial adverse effect, either directly or through habitat modifications, on any species identified as a candidate, sensitive, or special status species in local or regional plans, policies, or regulation, or by the California Department of Fish and Game or U.S. Fish and Wildlife Service? (11)			X	
b) Have a substantial adverse effect on any riparian habitat or other sensitive natural community indentified in local or regional plans, policies, regulations or by the California Department of Fish and Game or U.S. Fish and Wildlife Service? (11)			X	
c) Have a substantial adverse effect on federally protected wetlands as defined by Section 404 of the Clean Water Act (including, but not limited to, marsh, vernal pool, coastal, etc.) through direct removal, filling, hydrological interruption, or other means? (11)			X	
d) Interfere substantially with the movement of any native resident or migratory fish or wildlife species or with established native resident or migratory wildlife corridors, or impede the use of native wildlife nursery sites? (11)			X	
e) Conflict with any local policies or ordinances protecting biological resources, such as a tree preservation policy or ordinance? (12)				X
f) Conflict with the provisions of an adopted Habitat Conservation Plan, Natural Community Conservation Plan, or other approved local, regional or state habitat conservation plan? (3, 11)				X

Explanations:

a. **Less Than Significant Impact** – As documented in the Natural Environment Study (Minimal Impacts) (NESMI) (2014) for this project, six special status species were found to have a low to moderate probability of occurring within the Biological Study Area (see Figure 4). All six special status species are not currently listed on either the California Endangered Species Act (CESA) or the Federal Endangered Species Act (FESA) threatened or endangered species lists. The species are listed as California Department of Fish and Wildlife (CDFW) Species of Special Concern (SSC) and/or federal Migratory Bird Treaty Act (MBTA) of 1918. These species are desert cymopterus (*Cymopterus deserticola*), sagebrush loeflingia (*Loeflingia squarrosa* var. *artemisiarum*), beaver dam breadroot (*Pediomelum castoreum*), burrowing owl (*Athene cunicularia*), loggerhead shrike (*Lanius ludovicianus*), and Coast horned lizard (*Phrynosoma blainvillii*). The probability of special status species was determined to be low to moderate due to the presence of only low-quality habitat at the site. Implementation of measures BIO-1 through BIO-3 for sensitive plant species and measures BIO-4 through BIO-10 for sensitive animal species would avoid and/or minimize the potential to adversely affect the special status species. Measure BIO-11 ensures that invasive species are not introduced or spread.

THIS PAGE LEFT BLANK INTENTIONALLY

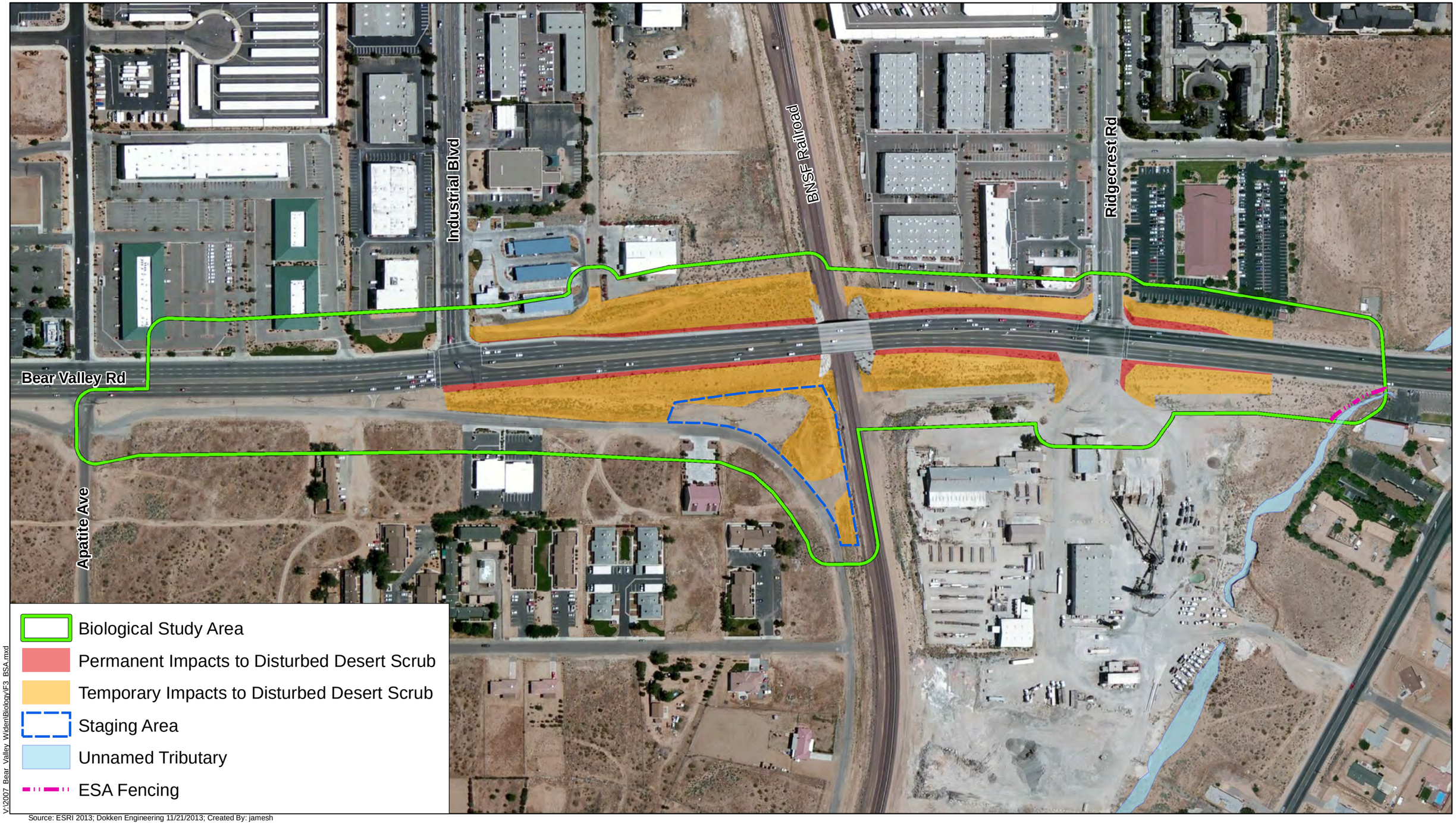

Source: ESRI 2013; Dokken Engineering 11/21/2013; Created By: jamesh

0 250 500 750 1,000 Feet

FIGURE 4
Biological Study Area
Federal Project Number BHLS-5380 (026)
Bear Valley Road Overhead at BNSF Railroad
City of Victorville, San Bernardino County, California

b. **Less Than Significant Impact** – As documented in the NESMI, disturbed desert scrub vegetation is the dominant vegetation community in the Biological Study Area. The disturbed soils do not support a large variety of plant species. Vegetation present within the BSA largely consists of disturbed desert scrub/sagebrush scrub communities and non-native ruderal vegetation on disturbed soils. The project would increase impervious surfaces by approximately 1 acre. These new impervious surfaces would be constructed in disturbed areas that contain little or no biological value. No sensitive rare plant species were observed during rare plant surveys conducted in April 2014 (see Appendix D for survey logs). Implementation of BIO-1 through BIO-3 will further avoid and minimize adverse effects to the sensitive plant species that have potential to exist within the Biological Study Area as discussed above.

c. **Less Than Significant Impact** – The Santa Fe Wash, a tributary of the Mojave River, is located on the eastern edge of the Biological Study Area is a Water of the U.S. and State. The project has been designed to completely avoid impacts to the tributary. To ensure that work in proximity to the tributary does not negatively impact water quality, the project shall comply with measure BIO-12 through BIO-15.

d. **Less Than Significant Impact** – The project is not anticipated to interfere with the movement of any native resident or migratory fish or wildlife species or with established native resident or migratory wildlife corridors, or impede the use of native wildlife nursery sites. The project would have less than significant impact or potential of affecting fish or wildlife species because Biological Study Area habitat has low suitability for sensitive species. While the burrowing owl is protected by the Migratory Bird Treaty Act as discussed above, it has a low to moderate potential to occur within the Biological Study Area. Therefore, because natural communities do not exist and migratory species have a low to moderate potential to occur within the Biological Study Area, movement and/or migratory corridors are not anticipated to be impacted by the project.

e. **Less Than Significant Impact** – One Joshua tree is located south of Bear Valley Road and west of the BNSF Railroad. Per measure BIO-17, the Joshua tree will be avoided through the use of ESA fencing. The project would not conflict with the Joshua tree ordinance in the City of Victorville's Municipal Code 2013, Chapter 13.33, Reservation and Removal of Joshua Trees.

f. **No Impact** – No approved habitat conservation or natural community conservation plans currently exist in the project area. Further, habitats within the Biological Study Area are not suitable for many wildlife species due to its disturbed and developed nature. Therefore, the project would not conflict with provisions of an adopted Habitat Conservation Plan, Natural Community Conservation Plan, or other approved local, regional, or state habitat conservation plan.

Avoidance, Minimization, and/or Mitigation Measures

- **BIO-1:** Prior to construction, a rare plant focused survey for **desert cymopterus** during the appropriate blooming season (April) shall be conducted by a qualified biologist. Should surveys determine the presence of the species within the Biological Study Area, specimens shall be ESA fenced or relocated as determined by the appropriate regulatory agency.

- **BIO-2**: Prior to construction, a rare plant focused survey for **sagebrush loeflingia** during the appropriate blooming season (April-May) shall be conducted by a qualified biologist. Should surveys determine the presence of the species within the Biological Study Area, specimens shall be ESA fenced or relocated as determined by the appropriate regulatory agency.

- **BIO-3:** Prior to construction, a rare plant focused survey for **beaver dam breadroot** during the appropriate blooming season (April-May) shall be conducted by a qualified biologist. Should surveys determine the presence of the species within the Biological Study Area,

specimens shall be ESA fenced or relocated as determined by the appropriate regulatory agency.

- **BIO-4:** A preconstruction survey shall be conducted to find active burrowing owl burrows within a 500-feet-wide buffer zone around any potentially suitable habitat that will be used during construction activities. The survey should also aim to identify if any other sensitive species have moved into the project area. A qualified wildlife biologist shall be retained to conduct the preconstruction survey during the breeding season. The burrowing owl survey shall be conducted in accordance to the CDFW Staff Report on Burrowing Owl Mitigation (CDFW 2012). A Burrowing Owl mitigation and Monitoring Report must be reviewed and approved by the CDFW prior to any disturbance of burrowing owl.

- **BIO-5:** Project-related vehicles will observe a 20-mph speed limit in all project areas, except on city roads. Off-road traffic outside of designated project areas should be prohibited.

- **BIO-6:** All trash shall be kept in wildlife-proof receptacles, and no non-natural food or water will be left unattended for the duration of the project construction. All food related trash items such as wrappers, cans, bottles, and food scraps should be disposed of in closed containers and removed at least once a week from the project site.

- **BIO-7:** No firearms shall be allowed on the project site.

- **BIO-8:** To prevent harassment or mortality of wildlife by dogs or cats, no pets will be permitted on the project site.

- **BIO-9:** An employee education program shall be conducted for construction personnel. The program should consist of a brief presentation by persons knowledgeable in desert cymopterus, sagebrush loeflingia, beaver dam breadroot, burrowing owl, loggerhead shrike, and coast horned lizard and legislative protection to explain species concerns to contractors, their employees, and agency personnel involved in the project. The program should include the following: a description of protected species and their habitat needs; a report of the occurrence of protected species near the project area; an explanation of the status of the species and its protection; and a list of measures being taken to reduce impacts to the species during project construction and implementation. A fact sheet conveying this information should be prepared for distribution to the above-mentioned people and anyone else who may enter the project site.

- **BIO-10:** After completion of the project, all areas subject to temporary ground disturbances, including storage and staging areas, temporary roads, etc. should be returned to pre-construction conditions, and revegetated with native seeds to promote restoration of the area. An area subject to "temporary" disturbance means any area that is disturbed during the project, but that after project completion will not be subject to further disturbance and has the potential to be revegetated. Appropriate methods and plant species used to revegetate such areas should be determined on a site-specific basis in consultation with a biologist.

- **BIO-11:** Erosion control or landscaping for this project shall not contain invasive species in the plant selections or seed mixtures. Construction equipment shall be cleaned before mobilizing to arrive at the project site and before leaving the project site.

- **BIO-12:** Erosion Control Measures shall be implemented during construction. To minimize the mobilization of sediment to adjacent water bodies, the following erosion-control and sediment-control measures will be included in the Storm Water Pollution Prevention Plan (SWPPP) to be included in the construction specifications, based on standard city measures

and standard dust reduction measures.

- Soil exposure should be minimized through the use of temporary Best Management Practices (BMPs), groundcover, and stabilization measures;

- All stockpile areas within 200 feet of the channel should be surrounded by a filter fabric fence and interceptor dike. Side slopes should not be steeper than 2:1;

- Where appropriate, bare areas should be covered with mulch and cleared areas should be revegetated with native species; and,

- The contractor shall conduct periodic maintenance of erosion- and sediment-control measures.

- **BIO-13:** To conform to water quality requirements, the SWPPP should include the following:

  - Vehicle maintenance and staging and storing equipment, materials, fuels, lubricants, solvents, and other possible contaminants shall be outside of the Santa Fe Wash. Any necessary equipment washing shall occur where the water cannot flow into the channel;

  - Construction equipment will not be operated in flowing water;

  - Raw cement, concrete or concrete washings, asphalt, paint or other coating material, oil or other petroleum products, or any other substances that could be hazardous to aquatic life shall be prevented from contaminating the soil or entering the channel;

  - Equipment used in and around the channel shall be in good working order and free of dripping or leaking engine fluids; and,

  - Any surplus concrete rubble, asphalt, or other rubble from construction shall be taken to an approved disposal site.

- **BIO-14**: The project boundaries near the Santa Fe Wash shall be staked with ESA fencing on the project-side of the channel to ensure equipment does not encroach into the channel. The staking and ESA fencing shall be done in coordination with a biologist, who is qualified and knowledgeable of biological resources in the Biological Study Area.

- **BIO-15:** An NPDES Section 402 Notice of Intent (Construction General Permit, 2009-0009-DWQ) will be obtained prior to construction.

- **BIO-16:** If vegetation (shrubs or trees) must be removed during the migratory bird breeding season (February 1st – August 31st), a pre-construction nesting bird survey must be conducted within 7 days prior to vegetation removal. Within 2 weeks of the nesting bird survey, all vegetation cleared by the project biologist must be removed by the contractor.

  A minimum 100 foot no-disturbance buffer must be established around any active songbird nest and a 500 foot buffer around any active raptor nest to limit the impacts of construction activities. The contractor must immediately stop work in the nesting area until the appropriate buffer is established and is prohibited from conducting work that could disturb the birds (as determined by the project biologist and in coordination with wildlife agencies) in the buffer area until the project biologist determines the young have fledged.

- **BIO-17:** The project site will be re-contoured and re-vegetated to best match pre-project

conditions.

- **BIO-18:** In compliance with the City of Victorville Municipal Code 13.33, the Joshua tree located south of Bear Valley Road and west of the BNSF Railroad will be avoided through the use of ESA fencing. If construction is not initiated prior to the winter of 2017, an updated Joshua tree inventory will be conducted in areas to be impacted by grading, vegetation removal, construction access and staging. Any future Joshua trees observed within the project limits will be handled in accordance with the City of Victorville Municipal Code 13.33.

V. **CULTURAL RESOURCES.** *Would the proposal*:	*Potentially Significant Impact*	*Less Than Significant w/Mitigation Incorporated*	*Less Than Significant Impact*	*No Impact*
a) Cause a substantial adverse change in the significance of a historical resource as defined in Section 15064.5? (2)				X
b) Cause a substantial adverse change in the significance of an archaeological resource pursuant to Section 15064.5? (2)				X
c) Directly or indirectly destroy a unique paleontological resource or site or unique geologic feature? (3)				X
d) Disturb any human remains, including those interred outside of formal cemeteries? (3)				X

Explanations:

a.-b. **No Impact** – As documented in the Historic Property Survey Report (HPSR), the following two historic cultural resources have been recorded within the Project Area Limits (Figure 5): CA-SBR-6793H, a segment of the Atchison, Topeka and Santa Fe Railroad (AT&SF), and CA-SBR-7016H, a segment of Bear Valley Cutoff/Bear Valley Road. Both of these resources have been exempted from further review for the purposes of this project as summarized below:

- CA-SBR-6793H, a segment of the Atchison, Topeka and Santa Fe Railroad (AT&SF): While the previously recorded AT&SF (currently BNSF) Railroad does bisect the project, the proposed project would not alter its alignment or berm construction, or add a new visual element to its landscape.
- CA-SBR-7016H, a segment of Bear Valley Cutoff/Bear Valley Road: This resource consists of a transportation facility that is not considered potentially important nor does it contribute to the significance of larger historic properties and therefore qualifies as an exempt property type.

Historic properties or archaeological resources would not be adversely affected by the proposed project. Minimization Measure CUL-1 would further avoid effects on historical and archaeological resources.

c. **No Impact** –The proposed project is not anticipated to impact paleontological resources. The project area is urbanized and has been disturbed previously for the existing roadway, bridge, and surrounding development.

d. **No Impact** – Disturbance to human remains, including those interred outside of formal cemeteries is not anticipated because the project site is already highly disturbed from existing roadways and development. Minimization Measure CUL-2 would further avoid effects on human remains.

<u>Avoidance, Minimization, and/or Mitigation Measures</u>

No mitigation is required; however, the following avoidance and/or minimization measures will be implemented to minimize potential impacts.

- **CUL-1**: If cultural materials are discovered during construction, all earth-moving activity within and around the immediate discovery area will be diverted until a qualified archaeologist can assess the nature and significance of the find.

- **CUL-2:** Section 5097.98 of the Public Resources Code and Section 7050.5 of the California Health and Safety Code protect Native American burials, skeletal remains and grave goods, regardless of age and provide method and means for the appropriate handling of such remains. If human remains are encountered, work should halt in that vicinity and the county coroner should be notified immediately. At the same time, an archaeologist should be contacted to evaluate the situation. If the human remains are of Native American origin, the coroner must notify the Native American Heritage Commission within 24 hours of such identification who will then notify the Most Likely Descendent (MLD). At this time, the person who discovered the remains will contact Gary Jones, California Department of Transportation, District 8, so that they may work with the MLD on the respectful treatment and disposition of the remains. Further provisions of PRC 5097.98 are to be followed as applicable.

Source: ESRI, DigitalGlobe, GeoEye, i-cubed, USDA, USGS, AEX, Getmapping, Aerogrid, IGN, IGP, swisstopo, and the GIS User; Dokken Engineering 5/20/2014; Created By: arcgis

V:\2007_Bear_Valley_Widen\Cultural\F3_APE.mxd

0 250 500 750 1,000 Feet

FIGURE 5
Project Area Limits (PAL)
Federal Project Number BHLS-5380 (026)
Bear Valley Road Overhead at BNSF Railroad
City of Victorville, San Bernardino County, California

VI. GEOLOGY AND SOILS. *Would the project*:	*Potentially Significant Impact*	*Less Than Significant w/Mitigation Incorporated*	*Less Than Significant Impact*	*No Impact*
a) Expose people or structures to potential substantial adverse effects, including the risk of loss, injury or death involving:		X		
i) Rupture of a known earthquake fault, as delineated on the most recent Alquist-Priolo Earthquake Fault Zoning Map issued by the State Geologist for the area or based on other substantial evidence of a known fault? (Refer to Division of Mines and Geology Special Publication 42.) (13, Figure S-1; 28)				X
ii) Strong seismic ground shaking? (13, Table S-1)		X		
iii) Seismic-related ground failure, including liquefaction? (13)				X
iv) Landslides? (13; 14)		X		
b) Result in substantial soil erosion or the loss of topsoil? (14)			X	
c) Be located on a geologic unit or soil that is unstable, or that would become unstable as a result of the project, and potentially result in on- or off-site landslide, lateral spreading, subsidence, liquefaction or collapse? (13; 14)		X		
d) Be located on expansive soil, as defined on Table 18-1-B of the Uniform Building Code (1994), creating substantial risks to life or property? (14; 15)			X	
e) Have soils incapable of adequately supporting the use of septic tanks or alternative waste water disposal systems where sewers are not available for the disposal of waste water?				X

Explanations:

a. **Less Than Significant with Mitigation Incorporated** – The Project will not expose people or structures to potential substantial adverse effects, including the risk of loss, injury or death as the project does not propose any development or allow development anywhere where it is not already permitted.

   i. **No Impact** – The City is in an area with a low potential of occurrence for surface rupture because there are no known or suspected fault traces located within the Victorville Planning Area. Therefore, surface rupture, due to faulting within the project site, is not anticipated to occur unless some unknown fault was to rupture.

   ii. **Less Than Significant with Mitigation Incorporated** - The City is located in an area with a high potential for severe ground-shaking. As a result of the widening of the bridge, the project will be constructing crash walls to protect the existing columns of the bridge to accommodate a clearance requirement standard required by the BNSF railroad. The addition of the crash walls, and thus, a change to how the existing columns would behave in a ground-shaking event, requires the bridge to be seismically retrofitted to meet current seismic standards. As a result, the bridge will be designed to adequately resist the forces of an earthquake.

iii. **No Impact** – The project site is not located within a portion of the City's Planning Area where it is anticipated that liquefaction may occur, as those areas are typically adjacent to the Mojave River. As a result, no significant exposure to liquefaction is anticipated.

iv. **Less Than Significant with Mitigation Incorporated** - The soil at the project site consists of Bryman loamy fine sand. The majority of the site consists of slopes ranging from 0 to 9 percent, characterizing them as smooth, nearly level and/or gently sloping. A small portion of the project consists of slopes ranging from 9 to 15 percent, categorizing them as moderate slopes in which caution must be used to prevent serious erosion. The small portion of the project that falls within this category is on the north side of Bear Valley Road, east of Ridgecrest Road. The City is anticipating building a westbound right turn lane into Ridgecrest Road that will require the existing 9 to 15 percent slope to be cut back in order to accommodate the widening. Other areas with 9 to 15 percent slope that will be slightly impacted by fill needed for roadway improvements are on the north side of Bear Valley Road, west of Ridgecrest Road and a small sliver south of Bear Valley Road, east of Ridgecrest Road. Overall, the project is not in an area subject to landslides because the project footprint is comprised of generally flat topography.

With erosion control standards for slope stabilization implemented through the Storm Water Pollution Prevention Plan (SWPPP) referenced in GEO-1, no significant exposure to landslides is anticipated.

b. **Less Than Significant Impact** – The proposed project takes place largely at existing paved areas, and would increase impervious areas by approximately 1 acres (considering grading limits and road improvements). No substantial loss of topsoils would result as the project is largely on an existing overhead and roadway. Best Management Practices and erosion control measures implemented under the NPDES general construction permit would ensure that the potential for impacts to topsoil or soil erosion are less than significant during construction.

c. **Less Than Significant with Mitigation Incorporated** – As previously noted, due to a lack of liquefaction susceptibility in addition to measures employed to minimize impacts of soil erosion due to moderate slopes and disturbed soils, the area is not considered unstable and should not become unstable as a result of this project. A geotechnical report will be prepared to evaluate soil characteristics and behavior within the project site. The project will be designed consistent with the geotechnical report and in compliance with current construction and seismic codes and standards as described in Measure GEO-2. As a result, the project would not have a significant potential to result in on-or off-site landslide, lateral spreading, subsidence, liquefaction or collapse.

d. **Less Than Significant Impact** – Typically soils in the City of Victorville have a low or very low probability of expansive soils as defined in Table 18-1-B of the Uniform Building Code (1994).

e. **No Impact** – The proposed project does not propose septic tanks.

<u>Avoidance, Minimization, and/or Mitigation Measures</u>

The following avoidance and/or minimization measures will be implemented (GEO-1 and GEO-2 are also repeated under measures HYD-1 and HYD-2).

- **GEO-1**: BMPs include any facilities and methods used to remove, reduce, or prevent storm water runoff pollutants from entering receiving waters. Erosion control methods, temporary and permanent BMPs, and improvement of drainage facilities along the roadway would minimize impacts from storm water runoff. A Storm Water Pollution Prevention Plan (SWPPP)

and NPDES-compliant measures would ensure no adverse impacts would occur to water quality associated with the project.

- **GEO-2**: Construction and design of the proposed project shall be in compliance with current construction and seismic codes and standards, which would reduce potential seismic hazard risks to acceptable levels. Specific design and construction measures recommended in subsequent geotechnical studies to reduce geologic or seismic hazards shall be implemented. Subsequent geotechnical studies shall be completed prior to completion of final design for the proposed project.

VII. GREENHOUSE GAS EMISSIONS. *Would the proposal*:	*Potentially Significant Impact*	*Less Than Significant w/Mitigation Incorporated*	*Less Than Significant Impact*	*No Impact*
a) Generate greenhouse gas emissions, either directly or indirectly, that may have a significant effect on the environment?			X	
b) Conflict with an applicable plan, policy or regulation adopted for the purpose of reducing the emissions of greenhouse gases? (3)			X	

Explanations:

a. **Less Than Significant Impact** – In addition to adherence to local, regional, and state standards for pollutants, all projects under CEQA are required to identify any potential impacts the project may have on climate change and emission of greenhouse gasses (GHG). Common GHG includes vapor, carbon dioxide, methane, nitrous oxides, chlorofluorocarbons, hydrofluorocarbons, perfluorocarbons, sulfur hexafluoride, ozone, and aerosols.

The project would have less than significant impacts on climate change or GHG emissions. Traffic volumes would be the same with or without the project. As shown in Table 2, CO2 emissions during the Opening Year are estimated to be 20 tons/day with the Build or No-Build Alternatives. Estimated CO2 emissions during Design Year are estimated to be 29 tons/day for both the Build or No-Build Alterntives. Since the project would not increase traffic, GHG emissions by the project would not be significant.

Table 2: Opening Year and Design Year Emissions

	CO_2 EMISSIONS	
	Opening Year - 2015	**Design Year - 2035**
Build Alternative	20 tons/day	29 tons/day
No-Build Alternative	20 tons/day	29 tons/day

Sources: CT-EMFAC assuming Greentree Boulevard is constructed. Assumed speed of 25 mph for opening and design year. Data used from Traffic Study (2014).

b. **Less Than Significant Impact** - The City of Victorville, in participation with the San Bernardino Association of Governments (SANBAG), is in the process of completing a Climate Action Plan to achieve emission reduction goals outlined by the Global Warming Solutions Act of 2006 (AB 32) Since Bear Valley Road is planned as a Super Arterial in the City's General Plan, the project is not anticipated to conflict with the City's future Climate Action Plan.

Avoidance, Minimization, and/or Mitigation Measures

No mitigation, minimization, and/or mitigation measures are proposed.

VIII. HAZARDS AND HAZARDOUS MATERIALS. *Would the proposal*:	*Potentially Significant Impact*	*Less Than Significant w/Mitigation Incorporated*	*Less Than Significant Impact*	*No Impact*
a) Create a significant hazard to the public or the environment through the routine transport, use, or disposal of hazardous materials?			X	
b) Create a significant hazard to the public or the environment through reasonably foreseeable upset and accident conditions involving the release of hazardous materials into the environment? (16)		X		
c) Emit hazardous emissions or handle hazardous or acutely hazardous materials, substances, or waste within one-quarter mile of an existing or proposed school?			X	
d) Be located on a site which is included on a list of hazardous materials site compiled pursuant to Government Code Section 65962.5 and, as a result, would it create a significant hazard to the public or the environment? (16)				X
e) For a project located within an airport land use plan or, where such a plan has not been adopted, within two miles of a public airport or public use airport, would the project result in a safety hazard for people residing or working in the project area. (5; 17, S-4; 22)				X
f) For a project within the vicinity of a private airstrip, would the project result in a safety hazard for people residing or working in the project area? (22)				X
g) Impair implementation of or physically interfere with an adopted emergency response plan or emergency evacuation plan? (17, Fig. S-5)			X	
h) Expose people or structures to a significant risk of loss, injury or death involving wildland fires, including where wildlands are adjacent to urbanized areas or where residences are intermixed with wildlands? (5)				X

Explanations:

A Hazardous Waste Initial Site Assessment was prepared in November 2013 to evaluate the potential for hazardous waste related impacts this project could have on the environment.

a. **Less Than Significant Impact** – Routine hazardous waste materials such as gasoline would be used and transported in the project area during construction activities. BMPs for use, transportation and disposal of these types of routine hazardous materials would be implemented during construction to ensure potential impacts are less than significant.

b. **Less Than Significant Impact with Mitigation Incorporated** – The project is not anticipated to induce an accidental upset involving the release of hazardous materials into the environment. An Initial Site Assessment (ISA) was prepared in November 2013 for the project, and evaluated the potential for hazardous materials or petroleum hydrocarbons to exist within the study area. The

ISA was based on regulatory agency databases, topographic maps, aerial photographs, and visual site survey.

Review of historical records and field observations made during the ISA did not indicate any properties or facilities of concern within the site limits that have either reported releases of hazardous substances or petroleum products, or historical/existing land use that suggests the storage of hazardous substances or petroleum products, with the exception of BNSF railroad tracks that bisect the central portion of the Project. In addition, there is potential for aerially deposited lead (ADL) along Bear Valley Road.

Historical records and field observations indicate the presence of at least one other facility (17671 Bear Valley Road) adjacent to the project that is a potential source of hazardous substances or petroleum products. However, research of regulatory agency databases for the facility identified indicates that no documented historical releases were noted and the facility does not appear to have negatively impacted the Project area.

As documented in the ISA, there is a low likelihood of encountering hazardous substances or petroleum products associated with the facilities identified, with the exception of ADL and the petroleum hydrocarbons and heavy metals [notably arsenic] associated with the BNSF Railroad bed material. Actions under Avoidance, Minimization, and/or Mitigation Measures, HAZ-2 and HAZ-3, are recommended to verify the presence/extent of ADL, petroleum hydrocarbons, and heavy metals and evaluate the potential for remediation prior to final design, ROW acquisition and construction of the planned roadway and bridge improvements.

To avoid impacts from pavement striping during construction, Measure HAZ-3 will be implemented. To avoid impacts from unknown hazardous materials that may be discovered during excavation or other construction activities, Measures HAZ-4 and HAZ-5 will be implemented.

c. **Less Than Significant Impact** – The closest schools are Endeavour School of Exploration, 12403 Ridgecrest Road, Victorville, CA 92395, located approximately ½ mile north of the project site and Lakeview Middle School, 12484 Tamarisk Road, Victorville, CA 92395, located approximately ¾ mile northeast of the project site. No additional handling or transport of hazardous material is anticipated with the project. As a result, there would be a less than significant impact to schools as a result of project related hazardous materials.

d. **No Impact** – The proposed project is not on a site included in the list of hazardous materials sites compiled pursuant to Government Code Section 65962.5, which is also known as the Cortese List. A review of the “Cortese” Hazardous Waste & Substances Sites List indicated that there are no toxic sites within ½-mile of the project study area.

e. **No Impact** – The project is not within an airport land use plan area nor is it within two miles of an airport. The nearest public airport, the Southern California Logistics Airport, is approximately 13 miles northwest of the project site. The project would not result in a safety hazard for people residing or working in the project area.

f. **No Impact** –The nearest privately-owned airports or airstrips are the Southern California Edison High Desert District Heliport, located approximately 1.5 miles northwest of the project site, the Victor Valley Community Hospital Heliport, located 5 miles north of the project site, and the Osborne Airport, located approximately 13 miles north of the project site (Tollfreeairline.com). The proposed project is the widening, rehabilitation, and retrofit of the roadway and bridge and no potential obstructions are proposed or required for construction. There are no anticipated safety hazards for people residing or working in the project area.

g. **Less Than Significant Impact** – During construction, there would be no temporary substantial effects to public services such as fire, police, or emergency medical response. The roadway and bridge will remain open during construction and emergency vehicle access would be maintained through traffic control and/or stage construction as stated in HAZ-6. Once construction is complete, a striped 12' median will be available for emergency vehicles to utilize in cases when traffic is blocking access across the bridge, thus ultimately allowing for better emergency response times.

h. **No Impact** – The project site is adjacent to industrial, commercial, and residential land uses. No project components are adjacent to, or within, wildlands.

Avoidance, Minimization, and/or Mitigation Measures

- **HAZ-1:** Perform a preliminary aerially deposited lead (ADL) investigation in areas of exposed soil within 50 feet of the paved surfaces of Bear Valley Road, including the Bear Valley Road intersections with Industrial Boulevard and Ridgecrest Road, to evaluate the possible presence and levels of aerially deposited lead (ADL) from motor vehicles exhaust emissions. These investigations shall be completed prior to completion of final design of the project.

- **HAZ-2:** Perform a preliminary screening (soil sampling and analytical testing) for soils that will be impacted by construction activities near the BNSF railroad bed material. These samples would determine if any hazardous levels of heavy metals and total petroleum hydrocarbons exist. If these contaminants are found in hazardous levels where construction impacts are unavoidable, appropriate disposal of the contaminated soils shall be performed during construction. Testing shall be completed prior to completion of final design of the project.

- **HAZ-3:** To avoid impacts from pavement striping during construction it is recommended that testing and removal requirements for yellow striping and pavement marking materials be performed in accordance with Caltrans Standard Special Provision 14-001 Remove Traffic Stripe and Pavement Markings (Hazardous Waste).

- **HAZ-4:** As is the case for any project with proposed excavation, the potential exists for unknown hazardous contamination to be revealed during project construction (such as previously undetected petroleum hydrocarbon contamination from nearby sources or potential explosive threat if a gas pipeline is ruptured during construction). For any previously unknown hazardous waste/material encountered during construction, the Caltrans standard criteria for unknown hazardous waste/material shall be followed.

- **HAZ-5:** There may be instances in which hazardous waste has gone undetected. A note would be placed in the resident engineer's file to alert construction crews to the possibility of undetected hazardous waste and/or soil contamination. If soil discoloration, odor or fumes are encountered during construction, work should be stopped and the resident engineer informed.

- **HAZ-6:** Emergency vehicle access would be maintained through traffic control and/or stage construction.

IX. **HYDROLOGY AND WATER.** *Would the proposal*:	*Potentially Significant Impact*	*Less Than Significant w/Mitigation Incorporated*	*Less Than Significant Impact*	*No Impact*
a) Violate any water quality standards or waste discharge requirements?			X	
b) Substantially deplete groundwater supplies or interfere substantially with groundwater recharge such that there would be a net deficit in aquifer volume or a lowering of the local groundwater table level (e.g., the production rate of pre-existing nearby wells would drop to a level which would not support existing land uses or planned uses for which permits have been granted)?				X
c) Substantially alter the existing drainage pattern of the site or area, including through the alteration of the course of a stream or river, in a manner that would result in substantial erosion or siltation on- or off-site?			X	
d) Substantially alter the existing drainage pattern of the site or area, including through the alteration of the course of a stream or river, or substantially increase the rate or amount of surface runoff in a manner which would result in flooding on- or off-site?			X	
e) Create or contribute runoff water which would exceed the capacity of existing or planned stormwater drainage systems or provide substantial additional sources of polluted runoff?		X		
f) Otherwise substantially degrade water quality?			X	
g) Place housing within a 100-year flood hazard area as mapped on a Federal Flood Hazard Boundary or Flood Insurance Rate map or other flood hazard delineation map? (17, Figure S-2; 18)				X
h) Place within a 100-year flood hazard area structures which would impede or redirect flood flows? (17, Figure S-2; 18)				X
i) Expose people or structures to a significant risk of loss, injury or death involving flooding, including flooding as a result of the failure of a levee or dam? (17, Figure S-2; 18)				X
j) Inundation by seiche, tsunami, or mudflow? (17, Table S-1)				X

Explanations:

a. **Less Than Significant Impact** – The project is not anticipated to violate any water quality standards or waste discharge requirements with mitigation. Permanent, long-term impacts are not anticipated because the additional runoff associated with the increase in impervious area would not be substantial and would be carried via curb and gutter to drainage facilities as occurs in the existing condition. During construction, water quality impacts to the Santa Fe Wash, a tributary to the Mojave River (east end of project site), would be avoided and minimized through erosion and sediment control practices, and avoidance of Waters by limiting the project footprint. Measures HYD-1 and HYD-2 would be implemented to avoid and minimize water quality impacts during construction.

b. **No Impact** – The project does not propose any activities requiring permanent increases in

groundwater use. Widening of Bear Valley Road and the rehabilitation and retrofitting of the bridge would not result in additional development in the area that would require additional demand on groundwater.

c. **Less Than Significant Impact** – Drainage improvements by the proposed project would not substantially alter the existing drainage pattern in a manner that would result in substantial erosion or siltation on- or off-site. Drainage improvements would only consist of required curb, gutter, and inlets to convey stormwater from the roadway, as is the current situation.

d. **Less Than Significant Impact** – Drainage improvements by the proposed project would not substantially alter the existing drainage pattern in a manner that would result in substantial flooding on- or off-site. Drainage improvements would only consist of required curb, gutter, and inlets to convey stormwater from the roadway, as is the current situation.

e. **Less Than Significant with Mitigation Incorporated** – Drainage facilities at the existing overhead consist of curb and gutter that conveys storm water runoff away from the overhead. Runoff generated between the western limit of the project, Industrial Boulevard, to approximately 350 feet west of the centerline of the overhead, flows west via curb and gutter to pipes that direct the water toward the BNSF railroad tracks where there is an existing drainage swale that runs adjacent with the tracks. The remaining runoff in the project area is directed east via curb and gutter, past the eastern limit of the project at Ridgecrest Road until it eventually outfalls into the Mojave River. While an additional 1.3 acres of impervious area would be added with the project, it is not anticipated that the increase in associated runoff will exceed the capacity of the existing drainage systems. The proposed drainage facility would similarly connect with the existing storm water system.

   Sources of pollution in runoff from the project site include the roadway surface and construction activities. The roadway surface generally contains pollutants such as oils and greases that are deposited on or along roadways from automobiles. While the surface area of the roadway is increasing with the addition of a 12 foot striped median, traffic volumes are not anticipated to change. Therefore, additional sources of pollution generated in the storm water runoff would not result.

   During construction, pollutant runoff would be minimized through implementation of Best Management Practices (BMPs) that would be selected, constructed, monitored, and maintained in accordance with the Storm Water Pollution Prevention Plan (SWPPP) prepared for the project. See Minimization Measure HYD-2.

f. **Less Than Significant Impact** – Since water quality impacts from the proposed project are limited to storm water flows and storm water runoff would be fully accommodated by proposed features, no adverse impacts to groundwater or surface water would result. The proposed project would have less than significant impact on water quality.

g. **No Impact** – The project will not place housing within a 100-year flood hazard as no homes are proposed and no flood hazards traverse the project area. The project is within an area determined to be outside the 500-year floodplain as designated by the Federal Emergency Management Agency (FEMA).

h. **No Impact** – The project will not place a structure within a 100-year flood hazard that would impede or redirect flood flows as no development is proposed and no flood hazards traverse the project area. The project is within an area determined to be outside the 500-year floodplain as designated by the Federal Emergency Management Agency (FEMA).

i. **No Impact** - The project will not expose people or structures to a significant risk of loss, injury or death involving flooding as no homes or buildings are proposed and no flood hazards traverse the project area. The project is within an area determined to be outside the 500-year floodplain as

designated by the Federal Emergency Management Agency (FEMA).

j. **No Impact** – The project is not subject to inundation by seiche, tsunami, or mudflow. The project site is approximately 2 miles away from the nearest lake; approximately 100 miles away from the Pacific Ocean, and the project is in a flat valley not subject to mudflow.

Avoidance, Minimization, and/or Mitigation Measures

- **HYD-1:** For disturbed areas exceeding 1 acre national Pollutant Discharge Elimination System guidelines necessitate the development of a Strom Water Pollution Prevention Plan (SWPPP), unless the project qualifies for the EPA Small Construction Erosivity Waiver (SCEW), by the contractor. In the case the project qualifies for the SCEW, a Water Pollution Control Plan would be prepared in-lieu of the SWPPP to determine minimum control requirements.

- **HYD-2:** Best Management Practices (BMPs) would be implemented. BMPs include any facilities and methods used to remove, reduce, or prevent storm water runoff pollutants from entering receiving waters. Erosion control methods, temporary and permanent BMPs, and continuity of drainage facilities along the roadway would minimize impacts from storm water runoff. The SWPPP and NPDES-compliant measures would ensure no adverse impacts would occur to water quality associated with the project. Specific methods will include, but are not limited to:

    - **Watering**
    - **Outlet Protection/Velocity Dissipation Devices**
    - **Geotextiles, Plastic Covers & Erosion Control Blankets/Mats**

- **HYD-3:** Post construction Storm Water Management Program requirements will be reviewed and measures, such as Low-Impact Development design and site design measures, will be incorporated where feasible during Final Design.

X. LAND USE AND PLANNING. *Would the proposal*:	*Potentially Significant Impact*	*Less Than Significant w/Mitigation Incorporated*	*Less Than Significant Impact*	*No Impact*
a) Physically divide an established community? (6)				X
b) Conflict with applicable land use plan, policy, or regulation of an agency with jurisdiction over the project (including, but not limited to the general plan, specific plan, local coastal program, or zoning ordinance) adopted for the purpose of avoiding or mitigating an environmental effect? (1, Figure LU-1; 19)				X
c) Conflict with any applicable habitat conservation plan or natural community conservation plan? (3, 11)				X

Explanations:

a. **No Impact** – The project will not disrupt or divide an established community since the widening of Bear Valley Road will occur within its existing alignment. Further, the widening of Bear Valley Road to a Super Arterial is consistent with the City of Victorville's General Plan.

b. **No Impact** – Applicable land use plans, policies, or regulations include the City of Victorville's General Plan and the Southern California Association of Governments (SCAG) Federal Transportation Improvement Program (FTIP) and Regional Transportation Plan (RTP). The currently adopted City of Victorville General Plan Circulation Element (2008) shows Bear Valley Road as "Super Arterial". The project is also consistent with the SCAG FTIP. The project is listed as Project ID 200866 of "San Bernardino County, Local Highway Listing" projects of the FTIP (2013). The FTIP listed project is also within the SCAG RTP, listed as Project ID 200866 of the 2012-2035 RTP Sustainable Communities Strategy (2012). See Appendix A for applicable pages from the FTIP and RTP.

c. **No Impact** – No approved habitat conservation or natural community conservation plans currently exist in the project area.

<u>Avoidance, Minimization, and/or Mitigation Measures</u>

No mitigation, minimization, and/or mitigation measures are required.

XI. **MINERAL RESOURCES.** *Would the proposal*:	*Potentially Significant Impact*	*Less Than Significant w/Mitigation Incorporated*	*Less Than Significant Impact*	*No Impact*
a) Result in the loss of availability of a locally-important mineral resource recovery site delineated on a local general plan, specific plan or other land use plan? (3, Fig. RE-1)				X
b) Result in the loss of availability of a known mineral resource that would be of value to the region and the residents of the State? (3, Fig. RE-1)				X

Explanations:

a & b. **No Impact** – The proposed project is located in an area designated as MRZ-3a by the State Department of Conservation, Division of Mines and Geology's Mineral Land Classification Report entitled "Mineral Land Classification of Concrete Aggregate Resources in the Barstow – Victorville Area, San Bernardino County, California." While this designation indicates that areas within its boundaries may contain significant aggregate deposits, Bear Valley Road Overhead is an existing transportation facility within a highly urbanized area and therefore, the discovery of significant aggregate deposits is unlikely. Since mining operations in the City of Victorville and it's surrounding areas have historically been located along the Mojave River and in the North Mojave and Northern Expansion planning areas, it is unlikely that the project site contains mineral resources that would be locally important or of value to the residents of the State.

Avoidance, Minimization, and/or Mitigation Measures

No mitigation, minimization, and/or mitigation measures are required.

XII. **NOISE.** *Would the proposal result in*:	*Potentially Significant Impact*	*Less Than Significant w/Mitigation Incorporated*	*Less Than Significant Impact*	*No Impact*
a) Exposure of persons to or generation of noise levels in excess of standards established in the local general plan or noise ordinance, or applicable standards of other agencies? (5; 20, Tables N-2 & N-3; 30)			X	
b) Exposure of persons to or generation of excessive groundborne vibration or groundborne noise levels? (5; 20, Tables N-2 & N-3; 30)			X	
c) A substantial permanent increase in ambient noise levels in the project vicinity above levels existing without the project? (1; 5; 20, Tables N-2; 30)				X
d) A substantial temporary or periodic increase in ambient noise levels in the project vicinity above levels existing without the project? (15, Table N-3; 21)		X		
e) For a project located within an airport land use plan or, where such a plan has not been adopted, within two miles of a public airport or public use airport, would the project expose people residing or working in the project area to excessive noise levels? (5; 22)				X
f) For a project within the vicinity of a private airstrip, would the project expose people residing or working in the project area to excessive noise levels? (22)				X

Explanations:

Following the Caltrans Traffic Noise Analysis Protocol (2011), the project was determined not to be a "Type 1" project and therefore did not require long-term analysis for noise impacts. A Type 1 project is defined in 23 CFR 772.5(h) as "construction on a new location or the physical alteration of an existing highway, which significantly changes either the horizontal or vertical alignment or increases the number of through-traffic lanes." Due to no increase in through-traffic lanes and very little horizontal and vertical shift, the project does not bring traffic closer to receptors.

a. **Less Than Significant Impact** – No permanent, long-term noise impacts would result from the project since there is no increase in through-traffic lanes and no horizontal and vertical shift. During construction, the project would generate general construction-related noise. Use of sheet piles are anticipated for the bridge widening. Apartment complexes are approximately 400 feet south of the roadway. Construction noise would have a less than significant impact because construction activities would be temporary and intermittent, and would be minimized by implementing measure NOI-1. Specifically, NOI-1 discusses compliance with Caltrans standard noise control for construction.

   The loudest construction activities may include engine noise from construction vehicles, jack hammering, and pile driving. For this project, lowest construction equipment-related noise levels would be 55 A-weighted decibels (dBA) at a distance of 50 feet for sound from a pick-up truck. Highest noise levels would be up to 86 dBA (at a distance of 50 feet) for pile driving. Construction noise would be short-term and intermittent. Construction is expected to take a maximum of 12 months.

b. **Less Than Significant Impact** – The project would take place within areas zoned as commercial, industrial, and residential. The nearest noise receptors are businesses directly adjacent to the project location and an apartment complex located approximately 400 feet south of the roadway. The proposed project is not anticipated to result in substantial ground borne vibration or noise levels. Construction related groundborne noise and ground vibration would be localized, resulting from use of jackhammer, concrete saws for pavement removal, and other pavement breaking equipment. Driving of sheet piles is anticipated for the bridge widening. These disturbances would be temporary and intermittent and would occur only during construction. Therefore, the project is not anticipated to result in substantial groundborne vibration or noise levels.

c. **No Impact** – As discussed in part "a" of this section, no permanent, long-term noise impacts would result from the project since there is no increase in through-traffic lanes and there would be very little horizontal and vertical shift. Following the Caltrans Traffic Analysis Protocol (2011), the project was determined not to be a "Type 1" project and therefore did not require long-term analysis for noise impacts. A Type 1 project is defined in 23 CFR 772.5(h) as "construction on a new location or the physical alteration of an existing highway, which significantly changes either the horizontal or vertical alignment or increases the number of through-traffic lanes." Due to no increase in through-traffic lanes and very little horizontal and vertical shift, the project does not bring traffic closer to receptors.

d. **Less Than Significant Impact with Mitigation Incorporated–** During construction of the project, noise from construction activities may intermittently dominate the noise environment in the immediate area of construction. Construction noise is regulated by Caltrans Standard Specifications Section 14-8.02, "Noise Control", which states that noise levels generated during construction shall comply with applicable local, state, and federal regulations, and that all equipment shall be fitted with adequate mufflers according to the manufacturers' specifications.

   No adverse noise impacts from construction are anticipated because construction would be conducted in accordance with Caltrans Standard Specifications Section 14-8.02 and applicable local noise standards. Construction noise would be short-term and intermittent. Construction is expected to take approximately 12 months. To offset temporary noise impacts, measure NOS-1 shall be implemented; therefore temporary noise impacts would be reduced to a less than significant level.

e. **No Impact** – The project is not located within an airport land use plan.

f. **No Impact** – The project is not located within the vicinity of a private airstrip.

<u>Avoidance, Minimization, and/or Mitigation Measures</u>

- **NOI-1:** The Contractor shall follow Caltrans Section 14-8.02 of the Standard Specifications. As such:

  - Do not exceed 86 dBA (A-weighted decibel) at 50 feet from the job site activities from 9pm to 6am.
  - Use an alternative waiting method instead of a sound signal unless required by safety laws.
  - Equip internal combustion engines with the manufacturer-recommended muffler.
  - Do not operate an internal combustion engine on the job site without the appropriate muffler.

XIII. POPULATION AND HOUSING. *Would the proposal*:	*Potentially Significant Impact*	*Less Than Significant w/Mitigation Incorporated*	*Less Than Significant Impact*	*No Impact*
a) Induce substantial population growth in an area, either directly (e.g., by proposing new homes and businesses) or indirectly (e.g., through extension of roads or other infrastructure)? (19)				X
b) Displace substantial numbers of existing housing, necessitating the construction of replacement housing elsewhere?				X
c) Displace substantial numbers of people, necessitating the construction of replacement housing elsewhere?				X

Explanations:

a. **No Impact** – The improvements proposed would not induce population growth as it accommodates already planned growth in the area.

b. **No Impact** – The project would not displace any residential housing nor would it require relocation of any people in the vicinity. The project is largely within an existing overcrossing and roadway and would only require minor partial acquisitions not involving housing.

c. **No Impact** – The project would not displace any residential housing nor would it require relocation of any people in the vicinity.

Avoidance, Minimization, and/or Mitigation Measures

No mitigation, minimization, and/or mitigation measures are required.

XIV. PUBLIC SERVICES. *Would the project result in substantial adverse physical impacts associated with the provision of new or physically altered government facilities, need for new or physically altered governmental facilities, the construction of which could cause significant environmental impacts, in order to maintain acceptable service ratios, response times or other performance objectives for any of the public services:*

	Potentially Significant Impact	*Less Than Significant w/Mitigation Incorporated*	*Less Than Significant Impact*	*No Impact*
a) Fire protection?			X	
b) Police protection?			X	
c) Schools? (23; 24)			X	
d) Parks? (25)				X
e) Other public facilities? (25)				X

Explanations:

a.-b. **Less Than Significant Impact** – The Bear Valley Road Overhead at BNSF Railroad would remain open throughout construction, therefore, service delivery such as fire, medical, and police would not be disrupted during construction and access impacts would be minimized. Once construction is complete, a striped 12' median will be available for emergency vehicles to utilize in cases when traffic is blocking access across the bridge, thus ultimately allowing for better emergency response times.

c. **Less Than Significant Impact** – The closest schools are Endeavour School of Exploration, 12403 Ridgecrest Road, Victorville, CA 92395, located approximately ½ mile north of the project site and Lakeview Middle School, 12484 Tamarisk Road, Victorville, CA 92395, located approximately ¾ mile northeast of the project site. While Bear Valley Road Overhead at BNSF Railroad is used for school bus routes for both schools, it will be kept open during construction through construction staging and no impacts to schools are expected as a result of this project.

d-e. **No Impact** – There are no parks or other public facilities within or adjacent to the project area. The project would not result in the need for new or physically altered parks, or other public facilities. No mitigation measures would be required.

<u>Avoidance, Minimization, and/or Mitigation Measures</u>

No mitigation, minimization, and/or mitigation measures are required.

XV. **RECREATION.** *Would the proposal*:	*Potentially Significant Impact*	*Less Than Significant w/Mitigation Incorporated*	*Less Than Significant Impact*	*No Impact*
a) Would the project increase the use of existing neighborhood and regional parks or other recreational facilities such that substantial physical deterioration of the facility would occur or be accelerated? (25)				X
b) Does the project include recreational facilities or require the construction or expansion of recreational facilities which might have an adverse physical effect on the environment?				X

Explanations:

a. **No Impact** – No community, regional, or other recreational facilities are within the proposed project area. The nearest neighborhood park, Mojave Vista Park at 16252 Burwood Avenue, is approximately 2.5 miles northwest of the proposed project limits. Increased use and associated physical deterioration is not anticipated.

b. **No Impact** – The proposed project does not include recreational facilities, nor does it require the construction or expansion of recreational facilities. The proposed project would accommodate existing and projected future traffic, and would not lead to induced growth or needed recreational facilities. (25)

Avoidance, Minimization, and/or Mitigation Measures

No mitigation, minimization, and/or mitigation measures are required.

XVI. TRANSPORTATION/CIRCULATION. *Would the proposal result in*:	*Potentially Significant Impact*	*Less Than Significant w/Mitigation Incorporated*	*Less Than Significant Impact*	*No Impact*
a) Conflict with an applicable plan, ordinance or policy establishing measures of effectiveness for the performance of the circulation system, taking into account all modes of transportation including mass transit and non-motorized travel and relevant components of the circulation system, including but not limited to intersections, streets, highways and freeways, pedestrian and bicycle paths, and mass transit? (19; 26)				X
b) Conflict with an applicable congestion management program, including, but not limited to level of service standards and travel demand measures, or other standards established by the county congestion management agency for designated roads or highways? (19)				X
c) Result in a change in air traffic patterns, including either an increase in traffic levels or a change in location that results in substantial safety risks? (22)				X
d) Substantially increase hazards due to a design feature (e.g., sharp curves or dangerous intersections) or incompatible uses (e.g., farm equipment)?				X
e) Result in inadequate emergency access?			X	
f) Conflict with adopted policies, plans, or programs regarding public transit, bicycle, or pedestrian facilities, or otherwise decrease the performance or safety of such facilities? (19, 26)			X	

Explanations:

a. **No Impact** – The proposed project consists of rehabilitating, retrofitting, and widening the existing bridge which carries Bear Valley Road over the BNSF Railroad in order to meet current AASHTO safety standards and Super Arterial standard roadway configurations set forth by the City of Victorville. Bear Valley Road is designated as a Super Arterial in the Victorville General Plan and therefore, the project does not conflict with any applicable plan, ordinance, or policy establishing measures of effectiveness for the performance of the circulation system. The configuration of a Super Arterial dictates sidewalks on both sides of the road instead of just one side as in the existing condition, shoulders and a 12-foot median. Remaining consistent with the Victorville Non-Motorized Transportation Plan, a Class II Bikeway (Bike Lane) which provides a striped lane for one-way bike travel will be incorporated into the project.

b. **No Impact** – Within the Circulation Element of the Victorville General Plan, Bear Valley Road between Hesperia Road and Peach Avenue has been designated Level of Service (LOS) F by the San Bernardino Associated Governments (SANBAG). SANBAG has been designated as the Congestion Management Agency responsible for establishing, maintaining, and enforcing San Bernardino County's Congestion Management Program (CMP). Although the CMP's level of service standard requires all CMP segments to operate at LOS E or better, an exception is made for the segment of Bear Valley Road between Hesperia Road and Peach Avenue that it can remain as LOS F. However, even though not required to improve level of service, certain elements of the project will improve traffic flow, and hence, reduce congestion, within the project area. Namely, the intersection of Bear Valley Road and Ridgecrest Road will be improved because of an additional westbound

dedicated right turn lane onto Ridgecrest Road and an additional eastbound, left turn lane onto Ridgecrest Road. The additional turn lanes at this intersection will improve the traffic flow of vehicles traveling along Bear Valley Road, and thus, improve congestion. The project will not conflict with any applicable congestion management program, including, but not limited to level of service standards and travel demand measures, or other standards established by the City or SANBAG.

c. **No Impact** – The proposed project would widen Bear Valley Road and widen, rehabilitate, and retrofit the Bear Valley Road Overhead at BNSF Railroad. The proposed project would have no effect on air traffic patterns and would not result in safety risks regarding the nearest publicly owned airport, Southern California Logistics Airport, located approximately 13 miles from the project site, or the nearest privately-owned airports or airstrips, the Southern California Edison High Desert District Heliport, located approximately 1.5 miles northwest of the project site, the Victor Valley Community Hospital Heliport, located 5 miles north of the project site, and the Osborne Airport, located approximately 13 miles north of the project site

d. **No Impact** – All design features would comply with City standards or would be individually reviewed prior to approval as a design exception.

e. **Less Than Significant Impact** – During construction, there would be no temporary substantial effects to public services such as fire, police, or emergency medical response. Temporary construction impacts will follow the City's standards. The roadway and bridge will remain open during construction and emergency access would be maintained through traffic control and/or stage construction as stated in TRA-1. Current traffic staging plans anticipate that all existing lanes will remain open on the bridge and the approach roadways, possibly utilizing k-rail and reduced lane widths to allow for widening of bridge. Once construction is complete, a striped 12' median will be available for emergency vehicles to utilize in cases when traffic is blocking access across the bridge, thus ultimately allowing for better emergency response times.

f. **Less Than Significant Impact** – Within the Circulation Element of the Victorville General Plan, Bear Valley Road is designated as a Super Arterial. A Super Arterial includes sidewalks and shoulders on both sides of the roadway, in addition to three travel lanes in each direction and a median. Currently, the segment of roadway within the project limits does not have shoulders and only has sidewalks on the south side of the road. To remain consistent with the City's Circulation Element, the project will construct shoulders and sidewalks, hence improving pedestrian and bicyclist access and safety across Bear Valley Road.

Avoidance, Minimization, and/or Mitigation Measures

- **TRA-1:** Emergency vehicle access would be maintained through traffic control and/or stage construction.

XVII. UTILITIES AND SERVICE SYSTEMS. *Would the project:*	*Potentially Significant Impact*	*Less Than Significant w/Mitigation Incorporated*	*Less Than Significant Impact*	*No Impact*
a) Exceed wastewater treatment requirements of the applicable Regional Water Quality Control Board?				X
b) Require or result in the construction of new water or wastewater treatment facilities or expansion of existing facilities, the construction of which could cause significant environmental effects?				X
c) Require or result in the construction of new storm water drainage facilities or expansion of existing facilities, the construction of which could cause significant environmental effects?			X	
d) Have sufficient water supplies available to serve the project from existing entitlements and resources, or are new or expanded entitlements needed?				X
e) Result in a determination by the wastewater treatment provider which serves or may serve the project that it has adequate capacity to serve the project's projected demand in addition to the provider's existing commitments?				X
f) Be served by a landfill with sufficient permitted capacity to accommodate the project's solid waste disposal needs? (3, 27)			X	
g) Comply with federal, state, and local statutes and regulations related to solid waste?				X

Explanations:

a. **No Impact** – As a transportation project, wastewater treatment requirements would not be affected.

b. **No Impact** – As a transportation project, no new water or wastewater treatment facilities, or expansion of existing facilities would be required.

c. **Less Than Significant Impact** – Drainage facilities in the project area consist of curb and gutter which conveys storm water runoff away from the bridge. Runoff generated between the western limit of the project, Industrial Blvd., to approximately 350 feet west of the centerline of the bridge, flows west via curb and gutter to pipes that direct the water toward the BNSF railroad tracks where there is an existing drainage swale that runs adjacent with the tracks. The remaining runoff in the project area is directed east via curb and gutter, past the eastern limit of the project at Ridgecrest Road until it eventually outfalls into the Mojave River. Although an additional 1.3 acres of impervious area will be added with the project, it is not anticipated that the increase in associated runoff will cause significant environmental effects because the existing drainage systems the project will tie into are able to accommodate the additional runoff.

d. **No Impact** – As a transportation project, water needs are anticipated to be minimal and therefore, water systems currently serving the area would be sufficient.

e. **No Impact** – As a transportation project, no impacts from, or to, wastewater treatment services would occur.

f. **Less Than Significant Impact** – As a transportation project, the project would not generate substantial solid waste in the long term. During construction, solid waste may be generated from modification of sidewalks and currently paved surfaces, however, the amount is not expected to exceed landfill capacities. It is anticipated that material will be hauled to the Victorville Landfill, which is operated by the County of San Bernardino Public Works Department, and is located at 17080 Stoddard Wells Road in the northeastern quadrant of the City of Victorville.

g. **No Impact** – The proposed project would comply with federal, state, and local statutes and regulations related to solid waste.

Avoidance, Minimization, and/or Mitigation Measures

No mitigation, minimization, and/or mitigation measures are required.

XVIII. MANDATORY FINDINGS OF SIGNIFICANCE.

	Potentially Significant Impact	Less Than Significant w/Mitigation Incorporated	Less Than Significant Impact	No Impact
a) Does the project have the potential to degrade the quality of the environment, substantially reduce the habitat of a fish or wildlife species, cause a fish or wildlife population to drop below self-sustaining levels, threaten to eliminate a plant or animal community, reduce the number or restrict the range of a rare or endangered plant or animal or eliminate important examples of the major periods of California history or prehistory? (11)			X	
b) Does the project have impacts that are individually limited, but cumulatively considerable? ("Cumulatively considerable" means that the incremental effects of a project are considerable when viewed in connection with the effects of past projects, the effects of other current projects, and the effects of probable future projects.)			X	
c) Does the project have environmental effects that will cause substantial adverse affects on human beings, either directly or indirectly? (20)			X	

Explanations:

a. **Less Than Significant Impact** – As documented in the Natural Environment Study (Minimal Impacts) (NESMI), habitat within the Biological Study Area (BSA) is heavily disturbed by past and current anthropogenic activities. There are no sensitive natural communities, state or federal jurisdictional waters, or appropriate habitat to support special status plants or wildlife within the BSA. Minimization and avoidance measures BIO-1 through BIO-15 would avoid impacts to biological resources.

   The project was determined to have no potential to affect historic properties or archeological resources. The project would not eliminate important examples of the major periods of California history or prehistory. Minimization and avoidance measures CUL-1 and CUL-2 would avoid impacts to cultural resources.

b. **Less Than Significant Impact** – The project does not have impacts that are “individually limited, but cumulatively considerable.” Viewed in connection with the effects of past projects, the effects of other current projects, and the effects of probable future projects, none of this project’s impacts would be considered cumulatively significant impacts to the environment. Since the overhead is an existing structure in a currently urbanized area and project features would not cause great disruption (features include seismic retrofit, sidewalks, shoulders, a median, and turn-lanes at existing intersections) cumulative impacts would not result.

c. **Less Than Significant Impact** – No substantial adverse effects on human beings, either directly or indirectly, are anticipated. Construction noise would be minimized through timing restrictions, and the Bear Valley Road Overhead at BNSF Railroad would remain open during the duration of project construction.

<u>Avoidance, Minimization, and/or Mitigation Measures</u>

No mitigation, minimization, and/or mitigation measures are required.

XVII. EARLIER ANALYSES.

Earlier analyses may be used where, pursuant to the tiering, program EIR, or other CEQA process, one or more effects have been adequately analyzed in an earlier EIR or negative declaration. Section 15063 (c)(3)(D). In this case a discussion identifies the following:

a) **Earlier analyses used.** Earlier analyses are identified and stated where they are available for review.

b) **Impacts adequately addressed.** Effects from the above checklist that were identified to be within the scope of and adequately analyzed in an earlier document pursuant to applicable legal standards are noted with a statement whether such effects were addressed by mitigation measures based on the earlier analysis.

c) **Mitigation measures.** For effects that are "Less than Significant with Mitigation Incorporated", describe the mitigation measures which are incorporated or refined from the earlier document and the extent to which they address site-specific conditions for the project are described.

Authority: Public Resources Code Sections 21083 and 21087.
Reference: Public Resources Code Sections 21080(c), 21080.1, 21083, 21083.3, 21093, 21094, 21151; *Sundstrum v. County of Mendocino,* 202 CalApp 3d 296 (1988); *Leonoff v. Monterey Board of Supervisors,* 222 CalApp 3d 1337 (1990.

REFERENCES

1. California Department of Transportation, Eligible and Officially Designated Routes, http://www.dot.ca.gov/hq/LandArch/scenic/cahisys.htm
2. Historic Property Survey Report. Bear Valley Road Overhead at the Burlington Northern Santa Fe (BNSF) Railroad Project. December 2013. (Pending approval)
3. 2030 City of Victorville General Plan Resource Element.
4. California Department of Conservation. 2010. San Bernardino County Important Farmland Map.
5. City of Victorville General Plan Land Use Element
6. City of Victorville Official General Plan Land Use Policy Map.
7. Public Resource Code.
8. Mojave Desert Air Quality Management District CEQA Guidelines. August 2011.
9. California Department of Conservation, Division of Mines and Geology. 2000. A General Location Guide for Ultramafic Rocks in California – Areas More Likely to Contain Naturally Occurring Asbestos. ftp://ftp.consrv.ca.gov/pub/dmg/pubs/ofr/ofr_2000-019.pdf
10. U.S. EPA Greenbook. http://www.epa.gov/airquality/greenbook/ancl.html#CALIFORNIA.
11. Natural Environment Study – Minimal Impacts. Bear Valley Road Overhead at BNSF Railroad. February 2014. (Pending approval)
12. Victorville Municipal Code, Chapter 13.33.
13. 2030 City of Victorville General Plan Safety Element.
14. USDA, Natural Resources Conservation Service (NRCS). *Soil Survey of San Bernardino County, California, Mojave River Area.* http://websoilsurvey.nrcs.usda.gov, Accessed January 2014
15. Latest adopted version of the California Building Code
16. Hazardous Waste Initial Site Assessment. Bear Valley Road Overhead at BNSF Railroad Bridge. November 2013 (Pending approval)
17. 2030 City of Victorville General Plan Safety Element.
18. Flood Insurance Rate Map, 06071C6485H, Effective Date August 28, 2008, Federal Emergency Management Agency.
19. 2030 City of Victorville General Plan Circulation Element.
20. 2030 City of Victorville General Plan Noise Element.
21. Caltrans Standard Specifications, Section 14-8.02 Noise Control. http://www.dot.ca.gov/hq/esc/oe/construction_contract_standards/std_specs/2010_StdSpecs/2010_StdSpecs.pdf, Accessed February 2014
22. Toll Free Airline. 2014. San Bernardino County Public and Private Airports, California. http://www.tollfreeairline.com/california/sanbernardino.htm, Accessed January 2014.
23. Endeavour School of Exploration. 2013. Endeavor Bus Routes 2013/2014. http://www.vesd.net/schools/endeavour/, Accessed February 2014.
24. Lakeview Middle School. 2014. Lakeview Middle School Bus Routes 2013/2014. http://lms.vvuhsd.org/apps/pages/index.jsp?uREC_ID=222526&type=d&pREC_ID=488167, Accessed February 2014.
25. City of Victorville. Parks and Facilities List. http://www.ci.victorville.ca.us/Site/CityServices.aspx?id=278, Accessed February 2014
26. 2010 City of Victorville Non-Motorized Transportation Plan. Southern California Association of Governments' (SCAG) Compass Blueprint Demonstration Project Program. http://www.compassblueprint.org/Documents/CBResources/Victorville_Non-Motorized_Plan_Final_Report.pdf, Accessed March 2014.
27. 2030 General Plan Environmental Impact Report.
28. California Department of Conservation, 2010 Fault Activity Map of California, http://www.quake.ca.gov/gmaps/FAM/faultactivitymap.html

APPENDIX A:
FTIP and RTP PAGES

THIS PAGE LEFT BLANK INTENTIONALLY

SOUTHERN CALIFORNIA ASSOCIATION of GOVERNMENTS

2013 Federal Transportation Improvement Program

San Bernardino County
Local Highway
Including Amendments 1-16
(In $000`s)

ProjectID	County	Air Basin	Model	RTP ID	Program	Route	Begin	End	System	Conformity Category	Amendment
20130901	San Bernardino	MDAB		REG0704	STUDY				L	EXEMPT - 93.126	9

Description: PTC 190 Agency US BUREAU OF LAND MANAGEMENT

CALIFORNIA HISTORIC ROUTE 66 CORRIDOR MANAGEMENT PLAN - NEEDLES TO BARSTOW

Fund	ENG	R/W	CON	Total	Prior	2012/2013	2013/2014	2014/2015	2015/2016	2016/2017	2017/2018	Total
SCENIC BYWAYS DISCRET	152			152		152						152
PRIVATE FUNDS	38			38		38						38
20130901 Total	190			190		190						190

ProjectID	County	Air Basin	Model	RTP ID	Program	Route	Begin	End	System	Conformity Category	Amendment
20131103	San Bernardino	MDAB		REG0704	LUM06				L	EXEMPT - 93.126	11

Description: PTC 447 Agency VARIOUS AGENCIES

GROUPED PROJECTS FOR BICYCLE AND PEDESTRIAN FACILITIES FUNDED BY RECREATIONAL TRAILS PROGRAM: PROJECTS ARE CONSISTENT WITH 40 CFR PART 93.126 EXEMPT TABLES 2 AND TABLE 3 CATEGORIES - BICYCLE AND PEDESTRIAN FACILITIES (BOTH MOTORIZED AND NON-MOTORIZED)

Fund	ENG	R/W	CON	Total	Prior	2012/2013	2013/2014	2014/2015	2015/2016	2016/2017	2017/2018	Total
RECREATIONAL TRAILS			261	261			261					261
AGENCY			186	186			186					186
20131103 Total			447	447			447					447

ProjectID	County	Air Basin	Model	RTP ID	Program	Route	Begin	End	System	Conformity Category	Amendment
SBDLS08	San Bernardino	SCAB		SBDLS08	CAR60				L	EXEMPT - 93.126	16

Description: PTC 63,214 Agency VARIOUS AGENCIES

GROUPED PROJECTS FOR BRIDGE REHABILITATION AND RECONSTRUCTION - HBP PROGRAM -PROJECTS ARE CONSISTENT WITH 40 CFR PART 93.126, 127, 128 EXEMPT TABLES 2 & 3

Fund	ENG	R/W	CON	Total	Prior	2012/2013	2013/2014	2014/2015	2015/2016	2016/2017	2017/2018	Total
BRIDGE - LOCAL			24,041	24,041	3,376	2,636	1,219	2,398	717	9,451	4,244	24,041
AGENCY			2,284	2,284	600	214	222	311	11	491	435	2,284
LOCAL BRIDGE SEISMIC RETROFIT ACCOUNT			323	323		127			81		115	323
SBDLS08 Total			26,648	26,648	3,976	2,977	1,441	2,709	809	9,942	4,794	26,648

ProjectID	County	Air Basin	Model	RTP ID	Program	Route	Begin	End	System	Conformity Category	Amendment
200866	San Bernardino	MDAB		REG0701	CAN61				L	EXEMPT - 93.126	16

Description: PTC 5,849 Agency VICTORVILLE

BRIDGE NO 54C0547, BEAR VALLEY RD. OVER BNSF RAILWAY, AMTRAK & UP RR, 3.8 MILES E. OF I-15.WIDEN 6 LANE BRIDGE TO 7 LANE BRIDGE FOR MEDIAN TURN LANE AND SEISMICALLY RETROFITTING BRIDGE

Fund	ENG	R/W	CON	Total	Prior	2012/2013	2013/2014	2014/2015	2015/2016	2016/2017	2017/2018	Total
BRIDGE - LOCAL	620	133		753	443		310					753
CITY FUNDS	80	17		97	57		40					97
200866 Total	700	150		850	500		350					850

FTIP Projects					
County	System	FTIP ID	Route	Description	Project Cost ($1,000's)
SAN BERNARDINO	LOCAL HIGHWAY	200018	0	BOULDER AV ACROSS CITY CREEK S/O BASELINE – RECONSTRUCT EXISTING BRIDGE FROM 2 TO 4 LANES; ALSO WIDEN BOULDER AVE FROM 190' NORTH TO 1,430' SOUTH OF BRIDGE FROM 2-4 LANES (54C0648)	$21,898
SAN BERNARDINO	LOCAL HIGHWAY	SBD55033	0	BOULDER AVE. FROM GREENSPOT TO SOUTH CITY LIMITS – WIDEN FROM 2-4 LANES (0.60 MILES)	$2,350
SAN BERNARDINO	LOCAL HIGHWAY	200866	0	BRIDGE NO 54C0547, BEAR VALLEY RD. OVER BNSF RAILWAY, AMTRAK & UP RR, 3.8 MILES E. OF I-15.WIDEN 6 LANE BRIDGE TO 7 LANE BRIDGE FOR MEDIAN TURN LANE AND SEISMICALLY RETROFITTING BRIDGE	$5,427
SAN BERNARDINO	LOCAL HIGHWAY	2011158	0	BRYANT STREET IMPROVEMENTS, OAK GLEN RD. TO DATE AVE. EMBANKMENT/SLOPE PROTECTION	$720
SAN BERNARDINO	LOCAL HIGHWAY	2011121	0	CACTUS WIDENING – WIDEN CACTUS FROM VALLEY TO WALNUT AVENUES FROM 2-4 LANES	$2,235
SAN BERNARDINO	LOCAL HIGHWAY	SBD31876	0	CALIFORNIA STREET BARTON ROAD TO REDLANDS BOULEVARD WIDEN FROM 2 TO 4 LANES	$1,090
SAN BERNARDINO	LOCAL HIGHWAY	SBD59023	0	CAMPUS PKWY-PEPPER/LINDEN DRIVE EXTENSION FROM KENDALL TO I-215 FWY – CONSTRUCT (4) LANE ROADWAY – BETWEEN KENDALL DRIVE AND I-215, PARTIAL DIAMOND INTERCHANGE FOR N/B (2,000 FT)	$22,000
SAN BERNARDINO	LOCAL HIGHWAY	201139	0	CASA GRANDE AVENUE FROM LYTLE CREEK ROAD TO MANGO AVENUE CONSTRUCT 4 LANES	$10,500
SAN BERNARDINO	LOCAL HIGHWAY	200608	0	CENTRAL AVENUE WIDENING PROJECT BETWEEN WATERMAN AND MT.VIEW AVE.(2 MI) -WIDEN FROM 2-4 LANES BETWEEN TIPPECANOE AND MT.VIEW, ADDING CURBS, SIDEWALKS AND LIGHTING	$5,600
SAN BERNARDINO	LOCAL HIGHWAY	200023	0	CHERRY AV FROM SOUTH CITY LIMITS TO WILSON AV – WIDEN FROM 2 TO 4 LANES	$470
SAN BERNARDINO	LOCAL HIGHWAY	200409	0	CHERRY AVE. AT SCRRA RR CROSSING – WIDEN BRIDGE FROM 4-6 LANES ON CHERRY OVER RR CROSSING (FROM MERRILL TO WHITTRAM)	$8,829
SAN BERNARDINO	LOCAL HIGHWAY	200410	0	CHERRY AVE. WIDENING FROM WHITTRAM TO FOOTHILL BLVD. -WIDEN 4-6 LANES	$7,291
SAN BERNARDINO	LOCAL HIGHWAY	201107	0	CHERRY AVENUE FROM SOUTH HIGHLAND TO I-15 WIDEN (2-6 LANES)	$2,625
SAN BERNARDINO	LOCAL HIGHWAY	SBD58044	0	CITRUS AVENUE AUBURN CT. TO WABASH AVENUE WIDEN FROM 2 TO 4 LANES	$525
SAN BERNARDINO	LOCAL HIGHWAY	200006	0	CITRUS AVENUE FROM JURUPA TO SLOVER – WIDEN FROM 2-4 LANES W/LEFT TURN LANES AT INTERSECTIONS (SLOVER, SANTA ANA AVE. & JURUPA-3 INTERSECTIONS)	$5,830
SAN BERNARDINO	LOCAL HIGHWAY	201140	0	CITRUS AVENUE FROM SUMMIT AVENUE TO I-15 WIDEN FROM 2 TO 4 LANES	$2,625
SAN BERNARDINO	LOCAL HIGHWAY	201106	0	COMMERCE WAY FROM MICHIGAN AVENUE TO BARTON ROAD AT VIVIENDA AVENUE. NEW ROAD – 4 LANE ROAD EXTENSION	$1,066
SAN BERNARDINO	LOCAL HIGHWAY	20110109	0	CONSTRUCT NEW RAILROAD GRADE-SEPARATED CROSSING BETWEEN LAUREL STREET AND THE BNSF RAILROAD IN THE CITY OF COLTON. WORK ALONG LAUREL STREET BEGINS APPROXIMATELY 420 FT EAST OF PENNSYLVANIA AVE AND 195FT WEST OF 9TH ST. NO ADDITIONAL LANES ARE PROPOSED.	$53,995

APPENDIX B: MITIGATION, MONITORING, AND REPORTING PROGRAM

No.	Description of Commitment	Responsible Party/Monitor	Timing/Phase	Commitment Source
AES-1	Cut-off lights that direct light to the ground will be used to reduce light pollution.	City	Final Design	
AQ-1	In accordance with MDPA PM_{10} Plan, control measures to be implemented when construction/demolition activities disturb at least ½ acre are as follows: o Use water for short-term surface stabilization o Minimize trackout onto paved roads o Cover haul trucks o Stabilize (chemical or vegetation) site upon completion of grading when subsequent development is delayed o Rapid cleanup of project-related trackout or spills on paved roads o Minimize grading and soil movement when winds exceed 30 miles per hour	Contractor/City	Construction	
BIO-1	Prior to construction, a rare plant focused survey for **desert cymopterus** during the appropriate blooming season (April) shall be conducted by a qualified biologist. Should surveys determine the presence of the species within the Biological Study Area, specimens shall be ESA fenced or relocated as determined by the appropriate regulatory agency.	City	Pre-Construction	

No.	Description of Commitment	Responsible Party/Monitor	Timing/Phase	Commitment Source
BIO-2	Prior to construction, a rare plant focused survey for **sagebrush loeflingia** during the appropriate blooming season (April-May) shall be conducted by a qualified biologist. Should surveys determine the presence of the species within the Biological Study Area, specimens shall be ESA fenced or relocated as determined by the appropriate regulatory agency.	City	Pre-Construction	
BIO-3	Prior to construction, a rare plant focused survey for **beaver dam breadroot** during the appropriate blooming season (April-May) shall be conducted by a qualified biologist. Should surveys determine the presence of the species within the Biological Study Area, specimens shall be ESA fenced or relocated as determined by the appropriate regulatory agency.	City	Pre-Construction	
BIO-4	A preconstruction survey shall be conducted to find active burrowing owl burrows within a 500-feet-wide buffer zone around any potentially suitable habitat that will be used during construction activities. The survey should also aim to identify if any other sensitive species have moved into the project area. A qualified wildlife biologist shall be retained to conduct the preconstruction survey during the breeding season. The burrowing owl survey shall be conducted in accordance to the CDFW Staff Report on Burrowing Owl Mitigation (CDFW 2012). A Burrowing Owl mitigation and Monitoring Report must be reviewed and approved by the CDFW prior to any disturbance of burrowing owl.	City	Pre-Construction	

No.	Description of Commitment	Responsible Party/Monitor	Timing/Phase	Commitment Source
BIO-5	Project-related vehicles will observe a 20-mph speed limit in all project areas, except on city roads. Off-road traffic outside of designated project areas should be prohibited.	Contractor/City	Construction	
BIO-6	All trash shall be kept in wildlife-proof receptacles, and no non-natural food or water will be left unattended for the duration of the project construction. All food related trash items such as wrappers, cans, bottles, and food scraps should be disposed of in closed containers and removed at least once a week from the project site.	Contractor/City	Construction	
BIO-7	No firearms shall be allowed on the project site.	Contractor/City	Construction	
BIO-8	To prevent harassment or mortality of wildlife by dogs or cats, no pets will be permitted on the project site.	Contractor/City	Construction	
BIO-9	An employee education program shall be conducted for construction personnel. The program should consist of a brief presentation by persons knowledgeable in desert cymopterus, sagebrush loeflingia, beaver dam breadroot, burrowing owl, loggerhead shrike, and coast horned lizard and legislative protection to explain species concerns to contractors, their employees,	Contractor/City	Construction	

No.	Description of Commitment	Responsible Party/Monitor	Timing/Phase	Commitment Source
	and agency personnel involved in the project. The program should include the following: a description of protected species and their habitat needs; a report of the occurrence of protected species near the project area; an explanation of the status of the species and its protection; and a list of measures being taken to reduce impacts to the species during project construction and implementation. A fact sheet conveying this information should be prepared for distribution to the above-mentioned people and anyone else who may enter the project site.			
BIO-10	After completion of the project, all areas subject to temporary ground disturbances, including storage and staging areas, temporary roads, etc. should be returned to pre-construction conditions, and revegetated with native seeds to promote restoration of the area. An area subject to "temporary" disturbance means any area that is disturbed during the project, but that after project completion will not be subject to further disturbance and has the potential to be revegetated. Appropriate methods and plant species used to revegetate such areas should be determined on a site-specific basis in consultation with a biologist.	Contractor/City	Post-Construction	
BIO-11	Erosion control or landscaping for this project shall not contain invasive species in the plant selections or seed mixtures. Construction equipment shall be cleaned before mobilizing to arrive at the project site and before leaving the project site.	Contractor/City	Construction	

No.	Description of Commitment	Responsible Party/Monitor	Timing/Phase	Commitment Source
BIO-12	Erosion Control Measures shall be implemented during construction. To minimize the mobilization of sediment to adjacent water bodies, the following erosion-control and sediment-control measures will be included in the Storm Water Pollution Prevention Plan (SWPPP) to be included in the construction specifications, based on standard city measures and standard dust reduction measures. o Soil exposure should be minimized through the use of temporary Best Management Practices (BMPs), groundcover, and stabilization measures; o All stockpile areas within 200 feet of the channel should be surrounded by a filter fabric fence and interceptor dike. Side slopes should not be steeper than 2:1; o Where appropriate, bare areas should be covered with mulch and cleared areas should be revegetated with native species; and, o The contractor shall conduct periodic maintenance of erosion- and sediment-control measures.	Contractor/City	Construction	
BIO-13	To conform to water quality requirements, the SWPPP should include the following: o Vehicle maintenance and staging and storing equipment, materials, fuels, lubricants, solvents, and other possible contaminants shall be outside of the Santa Fe Wash. Any necessary equipment washing shall occur where the water cannot flow into the channel;	Contractor/City	Construction	

No.	Description of Commitment	Responsible Party/Monitor	Timing/Phase	Commitment Source
	o Construction equipment will not be operated in flowing water; o Raw cement, concrete or concrete washings, asphalt, paint or other coating material, oil or other petroleum products, or any other substances that could be hazardous to aquatic life shall be prevented from contaminating the soil or entering the channel; o Equipment used in and around the channel shall be in good working order and free of dripping or leaking engine fluids; and, o Any surplus concrete rubble, asphalt, or other rubble from construction shall be taken to an approved disposal site.			
BIO-14	The project boundaries near the Santa Fe Wash shall be staked with a ESA fencing on the project-side of the channel to ensure equipment does not encroach into the channel. The staking and ESA fencing shall be done in coordination with a biologist, who is qualified and knowledgeable of biological resources in the Biological Study Area.	Contractor/City	Pre-Construction	
BIO-15	An NPDES Section 402 Notice of Intent (Construction General Permit, 2009-0009-DWQ) will be obtained prior to construction.	Contractor/City	Pre-Construction	

No.	Description of Commitment	Responsible Party/Monitor	Timing/Phase	Commitment Source
BIO-16:	If vegetation (shrubs or trees) must be removed during the migratory bird breeding season (February 1st – August 31st), a pre-construction nesting bird survey must be conducted within 7 days prior to vegetation removal. Within 2 weeks of the nesting bird survey, all vegetation cleared by the project biologist must be removed by the contractor. A minimum 100 foot no-disturbance buffer must be established around any active songbird nest and a 500 foot buffer around any active raptor nest to limit the impacts of construction activities. The contractor must immediately stop work in the nesting area until the appropriate buffer is established and is prohibited from conducting work that could disturb the birds (as determined by the project biologist and in coordination with wildlife agencies) in the buffer area until the project biologist determines the young have fledged.	Contractor/City		
BIO-17:	The project site will be re-contoured and re-vegetated to best match pre-project conditions.	Contractor/City		

No.	Description of Commitment	Responsible Party/Monitor	Timing/Phase	Commitment Source
BIO-18:	In compliance with the City of Victorville Municipal Code 13.33, the Joshua tree located south of Bear Valley Road and west of the BNSF Railroad will be avoided through the use of ESA fencing. If construction is not initiated prior to the winter of 2017, an updated Joshua tree inventory will be conducted in areas to be impacted by grading, vegetation removal, construction access and staging. Any future Joshua trees observed within the project limits will be handled in accordance with the City of Victorville Municipal Code 13.33.	Contractor/City		
CUL-1	If cultural materials are discovered during construction, all earth-moving activity within and around the immediate discovery area will be diverted until a qualified archaeologist can assess the nature and significance of the find.	Contractor/City	Construction	
CUL-2	Section 5097.98 of the Public Resources Code and Section 7050.5 of the California Health and Safety Code protect Native American burials, skeletal remains and grave goods, regardless of age and provide method and means for the appropriate handling of such remains. If human remains are encountered, work should halt in that vicinity and the county coroner should be notified immediately. At the same time, an archaeologist should be contacted to evaluate the situation. If the human remains are of Native American origin, the coroner must notify the Native American Heritage Commission within 24 hours of such identification who will then notify the Most Likely Descendent (MLD). At this time, the person who discovered the remains will contact Gary Jones,			

No.	Description of Commitment	Responsible Party/Monitor	Timing/Phase	Commitment Source
	California Department of Transportation, District 8, so that they may work with the MLD on the respectful treatment and disposition of the remains. Further provisions of PRC 5097.98 are to be followed as applicable.			
GEO-1	BMPs include any facilities and methods used to remove, reduce, or prevent storm water runoff pollutants from entering receiving waters. Erosion control methods, temporary and permanent BMPs, and improvement of drainage facilities along the roadway would minimize impacts from storm water runoff. A Storm Water Pollution Prevention Plan (SWPPP) and NPDES-compliant measures would ensure no adverse impacts would occur to water quality associated with the project.	Contractor/City	Pre-Construction, Construction	
GEO-2	Construction and design of the proposed project shall be in compliance with current construction and seismic codes and standards, which would reduce potential seismic hazard risks to acceptable levels. Specific design and construction measures recommended in subsequent geotechnical studies to reduce geologic or seismic hazards shall be implemented. Subsequent geotechnical studies shall be completed prior to completion of final design for the proposed project.	City	Project Design Phase	
HAZ-1	Perform a preliminary aerially deposited lead (ADL) investigation in areas of exposed soil within 50 feet of the paved surfaces of Bear Valley Road, including the Bear Valley Road intersections with Industrial Boulevard and Ridgecrest Road, to	City	Project Design Phase	

No.	Description of Commitment	Responsible Party/Monitor	Timing/Phase	Commitment Source
	evaluate the possible presence and levels of aerially deposited lead (ADL) from motor vehicles exhaust emissions. These investigations shall be completed prior to completion of final design of the project.			
HAZ-2	Perform a preliminary screening (soil sampling and analytical testing) for soils that will be impacted by construction activities near the BNSF railroad bed material. These samples would determine if any hazardous levels of heavy metals and total petroleum hydrocarbons exist. If these contaminants are found in hazardous levels where construction impacts are unavoidable, appropriate disposal of the contaminated soils shall be performed during construction. Testing shall be completed prior to completion of final design of the project.	City	Project Design Phase	
HAZ-3	To avoid impacts from pavement striping during construction it is recommended that testing and removal requirements for yellow striping and pavement marking materials be performed in accordance with Caltrans Standard Special Provision 14-001 Remove Traffic Stripe and Pavement Markings (Hazardous Waste).	Contractor/City	Construction	
HAZ-4	As is the case for any project with proposed excavation, the potential exists for unknown hazardous contamination to be revealed during project construction (such as previously undetected petroleum hydrocarbon contamination from nearby sources or potential explosive threat if a gas pipeline is ruptured during construction). For any previously unknown hazardous waste/material encountered during construction, the Caltrans standard criteria for unknown hazardous waste/material shall be followed.	Contractor/City	Construction	

No.	Description of Commitment	Responsible Party/Monitor	Timing/Phase	Commitment Source
HAZ-5	There may be instances in which hazardous waste has gone undetected. A note would be placed in the resident engineer's file to alert construction crews to the possibility of undetected hazardous waste and/or soil contamination. If soil discoloration, odor or fumes are encountered during construction, work should be stopped and the resident engineer informed.	Contractor/City	Construction	
HAZ-6	Emergency vehicle access would be maintained through traffic control and/or stage construction.	Contractor/City	Construction	
HYD-1	For disturbed areas exceeding 1 acre national Pollutant Discharge Elimination System guidelines necessitate the development of a Strom Water Pollution Prevention Plan (SWPPP), unless the project qualifies for the EPA Small Construction Erosivity Waiver (SCEW), by the contractor. In the case the project qualifies for the SCEW, a Water Pollution Control Plan would be prepared in-lieu of the SWPPP to determine minimum control requirements.	Contractor/City	Pre-Construction	
HYD-2	Best Management Practices (BMPs) would be implemented. BMPs include any facilities and methods used to remove, reduce, or prevent storm water runoff pollutants from entering receiving waters. Erosion control methods, temporary and permanent BMPs, and continuity of drainage facilities along the roadway would minimize impacts from storm water runoff. The SWPPP and NPDES-compliant measures would ensure no adverse impacts would occur to water quality associated with the project. Specific	Contractor/City	Construction	

No.	Description of Commitment	Responsible Party/Monitor	Timing/Phase	Commitment Source
	methods will include, but are not limited to: o Watering o Outlet Protection/Velocity Dissipation Devices o Geotextiles, Plastic Covers & Erosion Control Blankets/Mats			
NOI-1	The Contractor shall follow Caltrans Section 14-8.02 of the Standard Specifications. As such: o Do not exceed 86 dBA (A-weighted decibel) at 50 feet from the job site activities from 9pm to 6am. o Use an alternative waiting method instead of a sound signal unless required by safety laws. o Equip internal combustion engines with the manufacturer-recommended muffler. o Do not operate an internal combustion engine on the job site without the appropriate muffler.	Contractor/City	Construction	
TRA-1	Emergency vehicle access would be maintained through traffic control and/or stage construction.	Contractor/City	Construction	

APPENDIX C: ACRONYMS

ADA	Accessibility Disability
B.A	Bachelor of Arts
BMP	Best Management Practices
BSA	Biological Study Area
CA	California
Caltrans	California Department of Transportation
CEQA	California Environmental Quality Act
CDFW	California Department of Fish and Wildlife
CO	Carbon Monoxide
CO2	Carbon dioxide
dBA	Decibels (A-weighted)
DBH	Diameter at breast height
EDR	Environmental Data Resources
EIR	Environmental Impact Report
EPA	Environmental Protection Agency
ESA	Environmentally Sensitive Area
IS	Initial Study
lb	pounds
M.A.	Master of Arts
OS	Open Space
NEPA	National Environmental Policy Act
NOX	Nitrogen Oxides
NPDES	National Pollutant Discharge Elimination System
PM2.5	Particulate matter, 2.5 microns
PM10	Particulate matter, 10 microns
RS-1 HD	Single-Family Residential, 1 Unit/Acre, Hillside Overlay District
RS-4	Single-Family Residential, 4 Units/Acre
SCEW	Small Construction Erosivity Waiver
SO2	Sulfur dioxide
SWPPP	Storm Water Pollution Prevention Plan
USFWS	U.S. Fish and Wildlife Service
VOC	Volatile organic compounds

APPENDIX D:
Biological Survey Results and Research

BAT ASSESSMENT
FOR THE
BEAR VALLEY ROAD OVERHEAD AT BNSF RAILROAD PROJECT

Prepared by: *DOKKEN ENGINEERING*
110 Blue Ravine Road, Suite 200
Folsom CA, 95630
Contact: ***Cherry Zamora***
(916) 858-0642

August 2014

BAT ASSESSMENT
FOR THE
BEAR VALLEY ROAD OVERHEAD AT BNSF RAILROAD PROJECT

INTRODUCTION

Dokken Engineering conducted a bat assessment survey for the Bear Valley Road overhead at BNSF Railroad Project located in the City of Victorville, San Bernardino County, California (Figure 1 Project Vicinity and Figure 2 Project Location). The proposed project would replace an existing bridge along Bear Valley Road over the BNSF railroad. Project activities associated with the bridge disturbance includes widening the bridge structure to accommodate for new sidewalks and seismic retrofitting to meet current seismic standards (Figure 3 Build Alternative). A bat assessment survey was conducted by Dokken Engineering biologists, prior to bridge disturbance in compliance with CDFW regulations. The bat assessment surveys did not identify bat habitation associated with the Bear Valley Road Overhead.

BACKGROUND

Bats

Like many bat species, day and night roosts occur in caves, mines, tunnels, buildings, and dense vegetation. Bridge structures often offer appropriate roosting habitat for bat species and CDFW requires presence/absence surveys to be conducted when there is potential for bats to occur. They commonly emerge to forage during the night until sunrise.

SURVEY METHODS

Dokken Engineering biologist, Sarah Holm surveyed the Bear Valley Road Overhead structure on October 22, 2013 for potential bat day or night roosting habitat components and the presence of urine staining/ scat. Weather conditions during the survey were clear skies, little to no winds, good visibility, and temperatures at approximately 72° F.

SURVEY RESULTS

On October 22, 2013 the bat assessment conducted at the Bear Valley Road Overhead found no sign of current or past bat habitation. The bridge structure is composed of concrete beams lacking suitable crevices, gaps or vertical clearance for bat day roosting; no sign of day or night roosting was observed (see attached Representative Photographs). No urine staining, scat or auditory chirps indicative of bat habitation was observed.

CONCLUSION

No presence of bats or bat roosting was observed at the project site, and the structure does not provide suitable bat day or night roosting habitat. No bats will be impacted during construction of the Bear Valley Road Overhead at BNSF Railroad Project. No additional bat surveys are required.

Carolynn Daman

Date: 11/20/14

Carolynn Daman, Biologist
(916) 858-0642
Dokken Engineering

Source: ESRI 2013; Dokken Engineering3/28/2014; Created By: cherryz

J:\2007_Bear_Vly_BR_Widen\200_Proj_Dev\230_Envirt\Maps_Exhibits\F1_BearValley_Vicinity.mxd

0 25 50 Miles

FIGURE 1
Project Vicinity
Federal Project Number BHLS-5380 (026)
Bear Valley Road Overhead at BNSF Railroad
City of Victorville, San Bernardino County, California

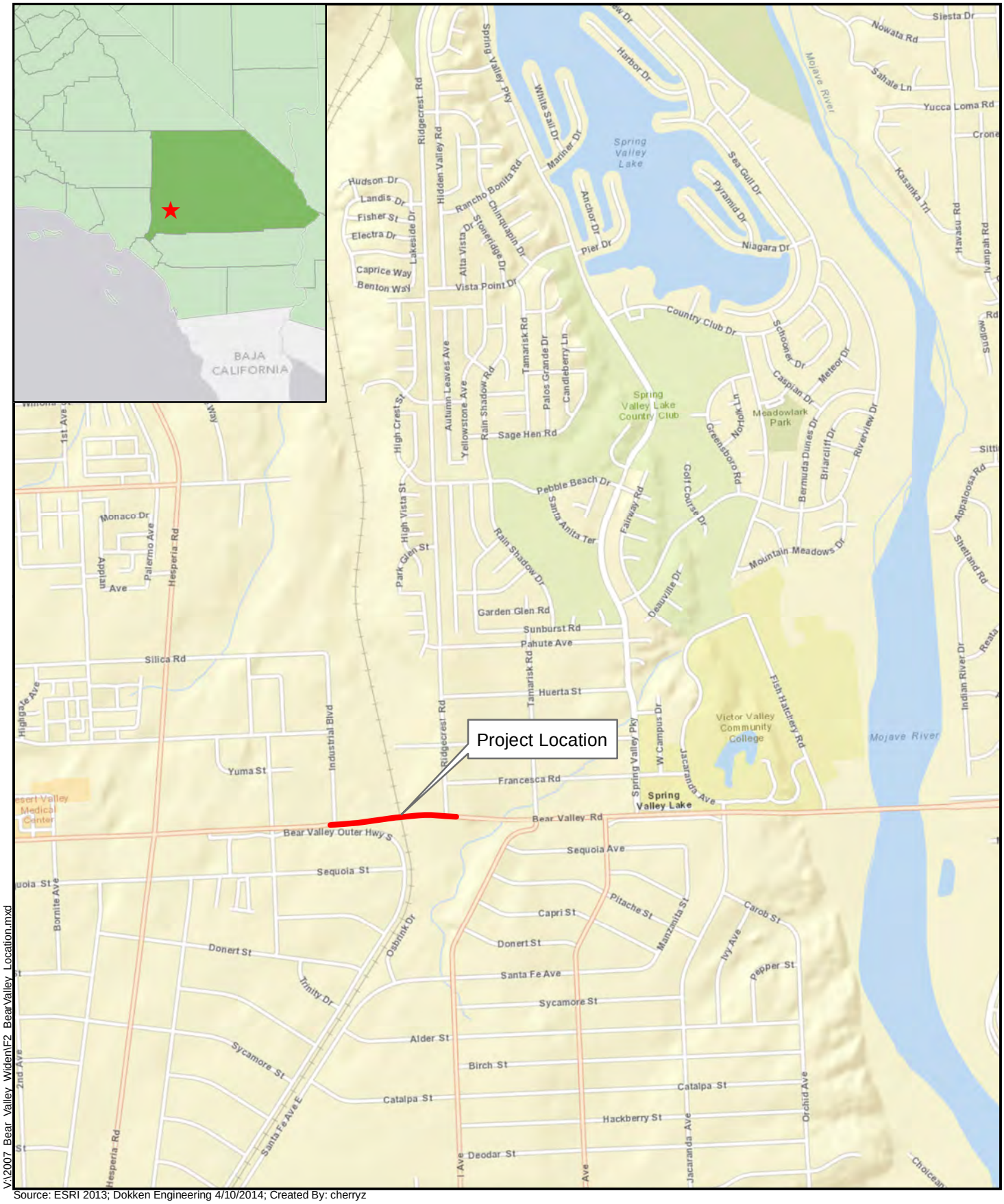

V:\2007_Bear_Valley_Widen\F2_BearValley_Location.mxd

Source: ESRI 2013; Dokken Engineering 4/10/2014; Created By: cherryz

0 0.25 0.5 0.75 1 Miles

FIGURE 2
Project Location

Federal Project Number BHLS-5380 (026)
Bear Valley Road Overhead at BNSF Railroad
City of Victorville, San Bernardino County, California

V:\2007_Bear_Valley_Widen\F3_BuildAlternative.mxd

Source: ESRI 2013 11/18/2013; Created By: jamesh

0 250 500 750 1,000 Feet

FIGURE 3
Build Alternative

Federal Project Number BHLS-5380 (026)
Bear Valley Road Overhead at BNSF Railroad
City of Victorville, San Bernardino County, California

REPRESENTATIVE PHOTOGRAPHS

Representative concrete structure lacking staining and roosting gaps; no bat habitat present.

Representative unused utility opening lacking staining and roosting habitat.

BEAR VALLEY ROAD OVERHEAD AT BNSF RAILROAD SURVEY LOG SHEET

Survey start/end times: 6:00 pm– 6:30 pm & 8:00am-10:00 am	**Summary:** Rare plant survey		
Surveyor Name (s): Dokken Engineering Angela Scudiere and James Hovis	**Weather Conditions:** 4/2 sunny & clear 4/3 sunny & clear	**Contacts:**	**Date:** 4/2-3/ 2014
Survey Activity: Survey for sensitive and rare plants			

Detailed Description of Survey Activities:

Activity	Comments
Sensitive Rare Plant Survey	No sensitive plants were observed; habitat disturbed and degraded.

Notes: Limited habitat for rare plants is available throughout the project site and no sensitive plant species were observed during the appropriate spring blooming season; therefore, the desert cymopterus (*Cymopterus deserticola*), sagebrush loeflingia (*Loeflingia squarrosa* var. *artemisiarum*), beaver dam breadroot (*Pediomelum castoreum*) and other sensitive rare plant species are presumed absent. During survey efforts, a single Joshua tree was observed within an empty lot south of Bear Valley Road and west of the BNSF Railroad. However, the Joshua tree is located at the edge of the Biological Study Area and on a parcel with no contractor access; therefore, project activities are not anticipated to impact the Joshua tree specimen.	**Topics to cover in next bio briefing:** N/A

Communication: N/A

Recommendations:

The following measure is recommended for incorporation into the Environmental Document:

In compliance with the City of Victorville Municipal Code 13.33, the Joshua tree located south of Bear Valley Road and west of the BNSF Railroad will be avoided (Rare Plant Survey: Figure 1 Joshua Tree Location). If construction is not initiated prior to the winter of 2017, an updated Joshua tree inventory will be conducted in areas to be impacted by grading, vegetation removal, construction access and staging. Any future Joshua trees observed within the project limits will be handled in accordance with the City of Victorville Municipal Code 13.33.

BEAR VALLEY ROAD OVERHEAD AT BNSF RAILROAD SURVEY LOG SHEET

Plant Species Observed:

Scientific Name	**Common Name**	**Native (N)/ Non-native (X)**
Achnatherum hymenoides	Indian ricegrass	N
Ambrosia dumosa	White bursage	N
Ambrosia psilostachya	Western ragweed	N
Brassica sp.	Mustard	X
Chamaesyce albomarginata	Rattlesnake weed	N
Chaenactis fremontii	Pincushion flower	N
Chorizanthe brevicornu	Brittle spineflower	N
Chylismia claviformis	Clavate fruited primrose	N
Datura wrightii	Jimsonweed	N
Ephedra fasciculata	Mormon tea	N
Ericameria nauseosa	Rabbitbrush	N
Ericameria paniculata	Mojave rabbitbrush	N
Eriogonum fasciculatum	California buckwheat	N
Heterotheca grandiflora	Telegraph weed	N
Erodium cicutarium	Redstem filaree	X
Hirschfeldia incana	Short podded mustard	X
Larrea tridentata	Creosote bush	N
Lycium andersonii	Anderson's desert thorn	N
Malacothrix sp.	Desert dandelion	N
Mirabilis sp.	Four o’ clock	N
Nerium oleander	Oleander	X
Petalonyx sp.	Sandpaper plant	N
Populus fremontii ssp. *fremontii*	Fremont cottonwood	N
Pyracantha sp.	Firethorn	X
Salix sp.	Willow	N
Salsola sp.	Russian thistle	X
Stillingia paucidentata	Mojave stillingia	N

BEAR VALLEY ROAD OVERHEAD AT BNSF RAILROAD SURVEY LOG SHEET

Representative Joshua tree to be designated an ESA located south of Bear Valley Road, west of the BNSF Railroad; facing south.

Representative disturbed habitat south of Bear Valley Road, facing west.

Representative disturbed habitat south of Bear Valley Road, facing northwest.

Representative disturbed habitat north of Bear Valley Road, facing east.

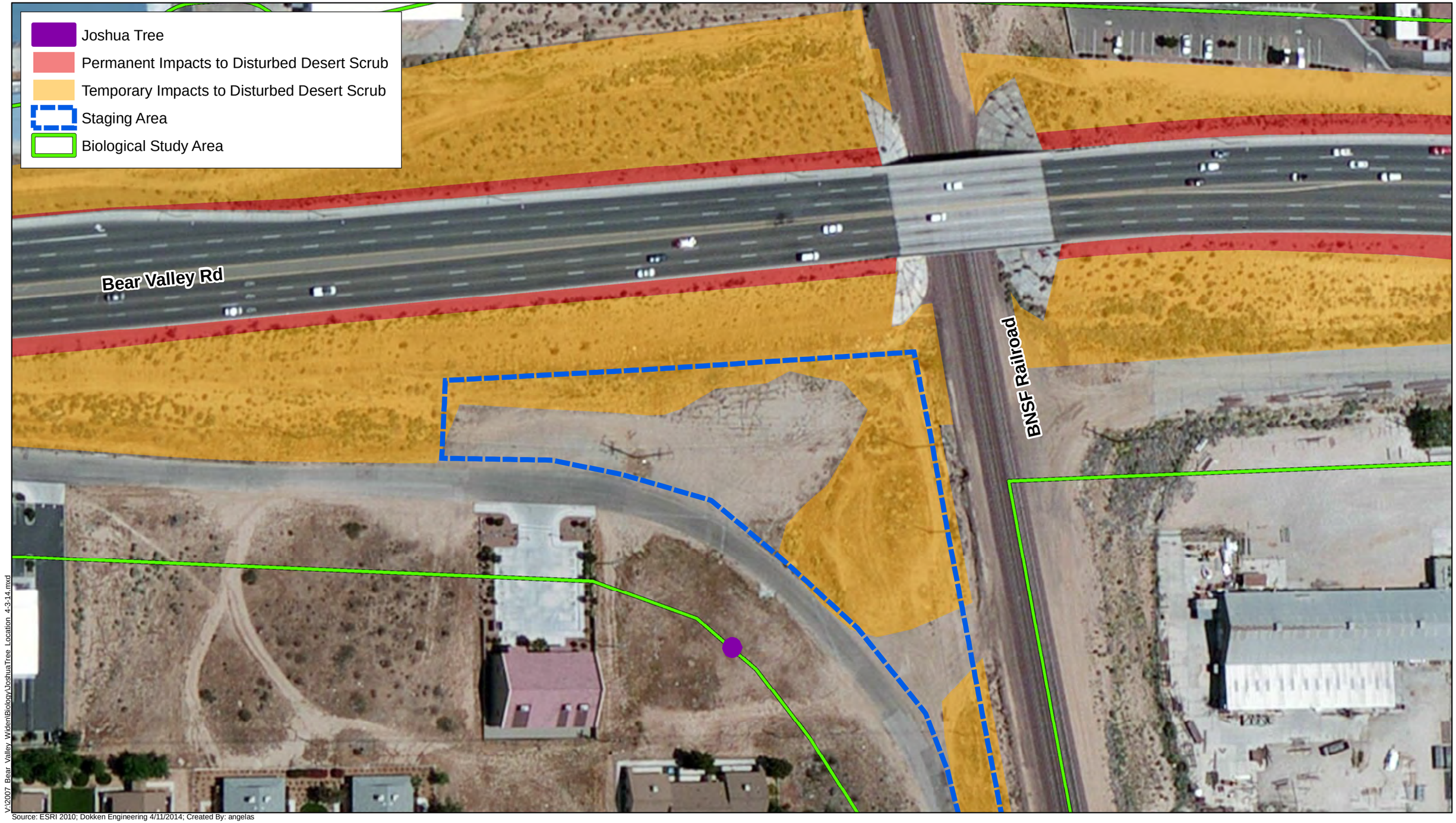

V:\2007 Bear Valley Widen\Biology\JoshuaTree Location 4-3-14.mxd

Source: ESRI 2010; Dokken Engineering 4/11/2014; Created By: angelas

0 50 100 150 200 Feet

FIGURE 1
Joshua Tree Location
Federal Project Number BHLS-5380 (026)
Bear Valley Road Overhead at BNSF Railroad
City of Victorville, San Bernardino County, California

COAST HORNED LIZARD SURVEY
FOR THE
BEAR VALLEY ROAD OVERHEAD AT BNSF RAILROAD PROJECT

Prepared by*: DOKKEN ENGINEERING*
110 Blue Ravine Road, Suite 200
Folsom CA, 95630
Contact: ***Cherry Zamora***
(916) 858-0642

August 2014

COAST HORNED LIZARD SURVEY
FOR THE
BEAR VALLEY ROAD OVERHEAD AT BNSF RAILROAD PROJECT

PROJECT BACKGROUND

On August 7th, 2014 between 8:30am and 11:00am at the request of the California Department of Fish and Wildlife (CDFW), a field survey for coast horned lizard (*Phrynosoma blainvillii*) in the vicinity of the proposed Bear Valley Road Overhead at BNSF Railroad Replacement project was completed. The proposed project will replace an existing bridge along Bear Valley Road over the BNSF railroad line in the City of Victorville, California.

COAST HORNED LIZARD BACKGROUND

Coast horned lizards are found in open areas with interspersed shrub cover and loose sandy soils frequently in sandy washes and lowlands. Common predators include raptors, canines and other medium sized mammals. Their diet includes ants beetles and spiders. Primary threats to the species include loss of habitat and the invasion of Argentine ants that displace the coast horned lizards primary prey base of harvester ants (CDFG 2000).

SURVEY METHODS

All project impact areas and potentially suitable habitat immediately adjacent to project impacts were surveyed. Surveys were conducted by walking meandering transects throughout the survey area in the morning when reptiles are more active in the summer months. In addition, shrubs and other potential cover were inspected for coast horned lizard. Species observed during the survey were recorded with special attention paid to reptiles, ants, and potential predators of coast horned lizards.

SURVEY RESULTS

The survey area north of Bear Valley Road and west of BNSF railroad is an unused lot behind light industrial facilities. Large portions of this area are surrounded by chain-link fence which could provide shelter from mammalian predators (Figure 1). This area contains suitable shrub cover, lose sandy soils, and both red and black harvester ants for prey. The rest of the survey areas contained lower quality habitat and had increased evidence of human disturbance. Canine tracks and scat were observed throughout the survey area. The most recent observation of coast horned lizard in the region on the California Natural Diversity Database is from 1978. No coast horned lizards were observed during the survey.

CONCLUSION

The area north of Bear Valley Road and west of BNSF railroad contains suitable habitat for coast horned lizard, none were observed during the survey. Preferred scrub vegetation, sandy soils, and preferred prey species were present but presence of canine predators, high traffic volumes on Bear valley road and the BNSF railroad, and other human disturbance could be factors that limit the success of coast horned lizards in this area.

Scott Salembier

Date: 08/20/14

Scott Salembier, Biologist
(916) 858-0642
Dokken Engineering

CDFG 2000. California Department of Fish and Game; Life History Account, Coast Horned Lizard (Phrynosoma coronatum). Available at: <https://nrm.dfg.ca.gov/FileHandler.ashx?DocumentVersionID=17641> (Accessed: 08/08/14)

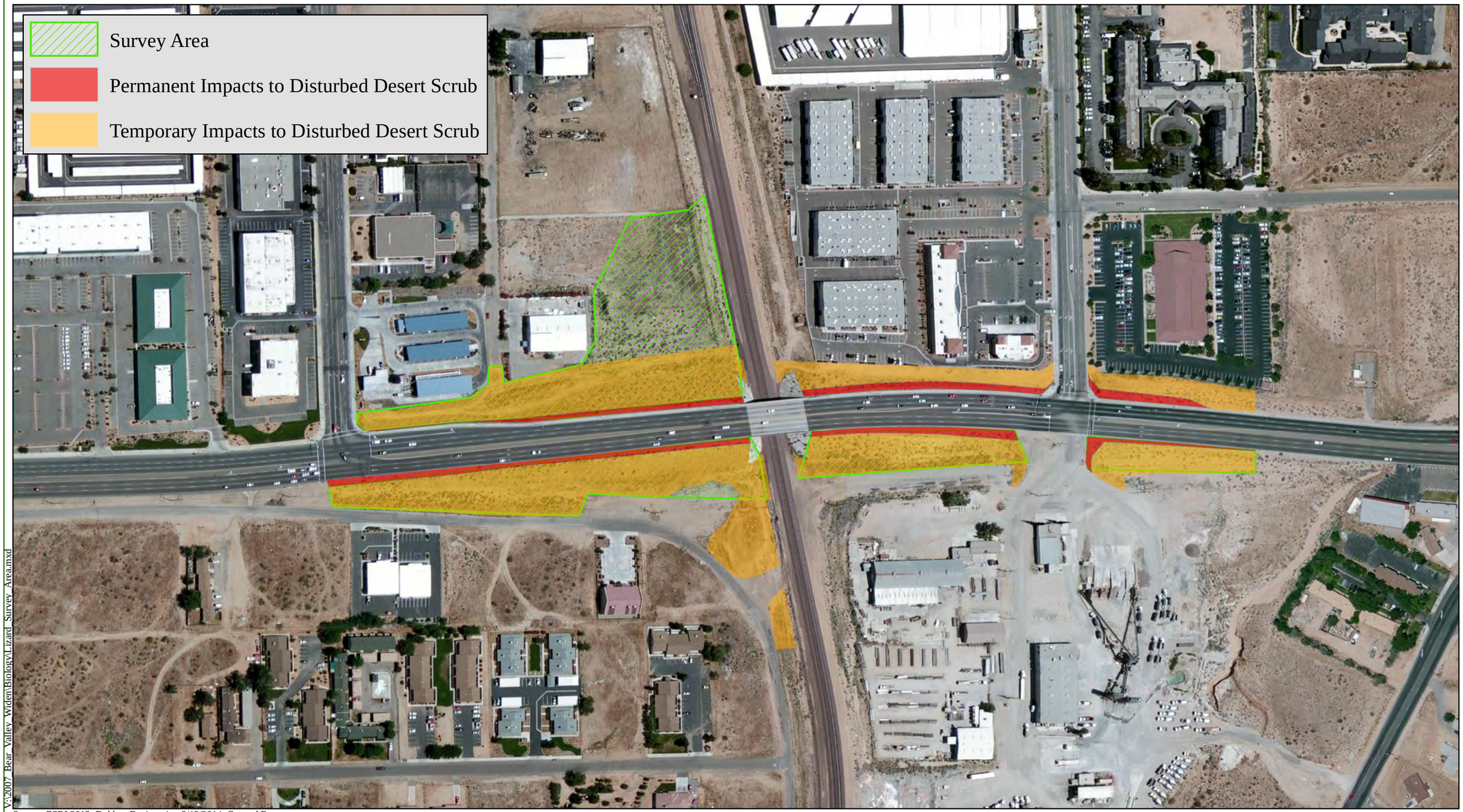

V:\2007_Bear_Valley_Widen\Biology\Lizard_Survey_Area.mxd

Source: ESRI 2013; Dokken Engineering 8/19/2014; Created By: scotts

0 250 500 750 1,000 Feet

Figure 1
Coast Horned Lizard Survey Area
Federal Project Number BHLS-5380 (026)
Bear Valley Road Overhead at BNSF Railroad
City of Victorville, San Bernardino County, California

Representative Photo 1: Potentially suitable habitat north of Bear Valley Road and west of BNSF railroad.

Representative Photo 2: Potentially suitable habitat north of Bear Valley Road and west of BNSF railroad.

Representative Photo 3: Unsuitable Habitat south of Bear Valley Road and west of BNSF railroad.

Representative Photo 4: One of the many harvester ant nests found within the study area.

APPENDIX E:
Responses to Comments

Comment 1: Lahonton Regional Water Quality Control Board, letter dated July 9, 2014

CALIFORNIA
Water Boards

RECEIVED
JUL 14 2014
ENGINEERING DEPT

EDMUND G. BROWN JR.
GOVERNOR

MATTHEW RODRIQUEZ
SECRETARY FOR
ENVIRONMENTAL PROTECTION

Lahontan Regional Water Quality Control Board

July 9, 2014

File: Environmental Doc Review
San Bernardino County

Brian Gengler
City of Victorville Public Works Division
14343 Civic Drive
Victorville, CA 92392
Email: BGengler@ci.victorville.ca.us

COMMENTS ON THE NOTICE OF COMPLETION OF A MITIGATED NEGATIVE DECLARATION, BEAR VALLEY ROAD OVERHEAD AT BNSF RAILROAD PROJECT, CITY OF VICTORVILLE, SAN BERNARDINO COUNTY, STATE CLEARINGHOUSE NUMBER 2014061040

The California Regional Water Quality Control Board, Lahontan Region (Water Board) staff received a Notice of Completion of an Initial Study Environmental Checklist and Mitigated Negative Declaration (IS/MND) for the above-referenced project (Project) on June 13, 2014. The IS/MND was prepared by the City of Victorville (City) and submitted in compliance with provisions of the California Environmental Quality Act (CEQA). The City proposes to widen the Bear Valley Road Overhead at the Burlington Northern Santa Fe Railroad (BNSF) crossing to meet current design standards. Additional improvements include widening the roadway approaches and construction of sidewalks and shoulders on both the east and west bound traffic lanes. Water Board staff, acting as a responsible agency, is providing these comments to specify the scope and content of the environmental information germane to our statutory responsibilities pursuant to CEQA Guidelines, California Code of Regulations, title 14, section 15096. Based on our review of the materials provided, we recommend that best management practices (BMPs) that effectively treat post-construction storm water runoff be included in Project development.

WATER BOARD'S AUTHORITY

All groundwater and surface waters are considered waters of the State. Surface waters include streams, lakes, ponds, and wetlands, and may be ephemeral, intermittent, or perennial. All waters of the State are protected under California law. State law assigns responsibility for protection of water quality in the Lahontan Region to the Lahontan Water Board. Some waters of the State are also waters of the U.S. The Federal Clean Water Act (CWA) provides additional protection for those waters of the State that are also waters of the U.S.

The *Water Quality Control Plan for the Lahontan Region* (Basin Plan) contains policies that the Water Board uses with other laws and regulations to protect the quality of waters of the State within the Lahontan Region. The Basin Plan sets forth water quality standards for surface water and groundwater of the Region, which include designated beneficial uses as well as narrative and numerical objectives which must be maintained or attained to protect

those uses. The Basin Plan can be accessed via the Water Board's web site at http://www.waterboards.ca.gov/lahontan/water_issues/programs/basin_plan/references.shtml.

SPECIFIC COMMENTS ON THE ENVIRONMENTAL REVIEW

Our comments on the Project are outlined below.

1. The Project will add an additional 1.3 acres of impervious surface and therefore will increase the volume of storm water runoff from the site. Storm water on the eastern portion of the site currently collects in unlined roadside ditches on the north and south sides of Bear Valley Road and discharges directly to an ephemeral channel (Santa Fe Wash), which is identified in Figure 4 of the IS/MND. The IS/MND states that the increase in runoff will not exceed the capacity of the existing drainage systems and that the Project proposes to utilize the existing storm water conveyance design with no changes.

   The ephemeral channel east of the Project site is in a current state of degradation (head cutting, increased siltation, undersized culvert at Bear Valley Road, etc.) due mostly in part to poorly planned development in the area and the concentrated discharge of storm water, to natural Santa Fe Wash from developed areas, both upstream and downstream of the project area. Recent storms in 2009 and 2010 have resulted in significant loss to property downstream of the Bear Valley Road BNSF Bridge due to hydro-modification and inadequately designed storm water conveyance systems. While it is not the Project proponent's responsibility to design this project to correct these issues, the proposed Project must be designed such that it does not exacerbate any pre-existing adverse condition(s), either onsite or offsite. We request that a hydrological study be performed for the Project and the results of this analysis be used as the basis for the Project's final design, particularly for post-construction storm water management and BMP design. 1A

2. The City of Victorville is regulated under the National Pollutant Discharge Elimination System General Permit No. CAS00004, Waste Discharge Requirements For Storm Water Discharges from Small Municipal Separate Storm Sewer Systems (MS4 General Permit). Discretionary development within the City that adds impervious surface area of 5,000 square feet or more, such as the proposed Project, is subject to the Post Construction Storm Water Management Program requirements as outlined Section E.12 of the MS4 General Permit. The Project is expected to abide by all applicable Post-Construction requirements outlined in the MS4 General Permit. A copy of MS4 General Permit can be found at http://www.waterboards.ca.gov/water_issues/programs/stormwater/docs/phsii2012_5th/wqo2013_0001_dwq.pdf. 1B

3. All temporary impacts should be restored (recontoured and revegetated) to match pre-Project conditions. 1C

4. Obtaining a permit and conducting monitoring does not constitute adequate mitigation. Development and implementation of acceptable mitigation is required. The environmental document must specifically describe the BMPs and other measures used to mitigate Project impacts. 1D

PERMITTING REQUIREMENTS

A number of activities associated with the proposed Project appear to have the potential to impact waters of the State and, therefore, may require permits issued by either the State Water Resources Control Board (State Water Board) or Lahontan Water Board. The required permits may include:

5. Land disturbance of more than 1 acre may require a CWA, section 402(p) storm water permit, including a National Pollutant Discharge Elimination System General Construction Storm Water Permit, Water Quality Order (WQO) 2009-0009-DWQ, obtained from the State Water Board, or individual storm water permit obtained from the Lahontan Water Board. 1E

6. Streambed alteration and/or discharge of fill material to a surface water may require a CWA, section 401 water quality certification for impacts to federal waters (waters of the U.S.), or dredge and fill waste discharge requirements for impacts to non-federal waters, both issued by the Lahontan Water Board. 1F

Please be advised of the permits that may be required for the proposed Project, as outlined above. Should Project implementation result in activities that will trigger these permitting actions, the Project proponent must consult with Water Board staff. Information regarding these permits, including application forms, can be downloaded from our web site at http://www.waterboards.ca.gov/lahontan/.

Thank you for the opportunity to comment on the IS/MND. If you have any questions regarding this letter, please contact me at (760) 241-7376 (jan.zimmerman@waterboards.ca.gov) or Patrice Copeland, Senior Engineering Geologist, at (760) 241-7404 (patrice.copeland@waterboards.ca.gov).

Jan M. Zimmerman, PG
Engineering Geologist

cc: State Clearinghouse (SCH 2014061040)
(via email, state.clearinghouse@opr.ca.gov)
Rebecca Jones California Department of Fish and Wildlife
(via email, rebecca.jones@wildlife.ca.gov)
Bonnie Rogers, US Army Corps of Engineers
(via email, bonnie.l.rogers@usace.army.mil)
Jay Cass, Lahontan Water Board

R:\RB6\RB6Victorville\Shared\Units\PATRICE'S UNIT\Jan\CEQA Review\BearValley-BNSF_IS-MND.docx

Comment 1A

The Project will add an additional 1.3 acres of impervious surface and therefore will increase the volume of storm water runoff from the site. Storm water on the eastern portion of the site currently collects in unlined roadside ditches on the north and south sides of Bear Valley Road and discharges directly to an ephemeral channel (Santa Fe Wash), which is identified in Figure 4 of the IS/MND. The IS/MND states that the increase in runoff will not exceed the capacity of the existing drainage systems and that the Project proposes to utilize the existing storm water conveyance design with no changes.

The ephemeral channel east of the Project site is in a current state of degradation (head cutting, increased siltation, undersized culvert at Bear Valley Road, etc.) due. mostly in part to poorly planned development in the area and the concentrated discharge of storm water, to natural Santa Fe Wash from developed areas, both upstream and downstream of the project area. Recent storms in 2009 and 2010 have resulted in significant loss to property downstream of the Bear Valley Road BNSF Bridge due to hydro-modification and inadequately designed storm water conveyance systems. While it is not the Project proponent's responsibility to design this project to correct these issues, the proposed Project must be designed such that it does not exacerbate any pre-existing adverse condition(s), either onsite or offsite. We request that a hydrological study be performed for the Project and the results of this analysis be used as the basis for the Project's final design, particularly for post-construction storm water management and BMP design.

Response 1A

Pre-existing adverse conditions would not be exacerbated onsite or offsite. A Drainage Report is being prepared and will include a hydrological analysis. The Drainage Report will be used during Final Design, including for post-construction storm water management and permanent BMP design.

Comment 1B

The City of Victorville is regulated under the National Pollutant Discharge Elimination System General Permit No. CAS00004, Waste Discharge Requirements For Storm Water Discharges from Small Municipal Separate Storm Sewer Systems (MS4 General Permit). Discretionary development within the City that adds impervious surface area of 5,000 square feet or more, such as the proposed Project, is subject to the Post Construction Storm Water Management Program requirements as outlined Section E.12 of the MS4 General Permit. The Project is expected to abide by all applicable Post-Construction requirements outlined in the MS4 General Permit. A copy of MS4 General Permit can be found at http://www.waterboards.ca.gov/water issues/programs/stormwater/docs/phsii2012 Sth/wgo2013 0001 dwq.pdf.

Response 1B

Post-Construction Storm Water Management Program requirements will be reviewed and measures, such as Low-Impact Development design and site design measures, will be incorporated where feasible during Final Design. This has been added as measure HYD-3.

Comment 1C

All temporary impacts should be restored (re-contoured and re-vegetated) to match pre-Project conditions.

Response 1C

The following measure has been added:

BIO-16: The project site will be re-contoured and re-vegetated to best match pre-project conditions.

Comment 1D

Obtaining a permit and conducting monitoring does not constitute adequate mitigation. Development and implementation of acceptable mitigation is required. The environmental document must specifically describe the BMPs and other measures used to mitigate Project impacts.

Response 1D

Measure HYD-2 was updated to include specific methods. The measure now states the following:

HYD-2: Best Management Practices (BMPs) would be implemented. BMPs include any facilities and methods used to remove, reduce, or prevent storm water runoff pollutants from entering receiving waters. Erosion control methods, temporary and permanent BMPs, and continuity of drainage facilities along the roadway would minimize impacts from storm water runoff. The SWPPP and NPDES-compliant measures would ensure no adverse impacts would occur to water quality associated with the project. Specific methods will include, but are not limited to:

- Watering
- Outlet Protection/Velocity Dissipation Devices
- Geotextiles, Plastic Covers & Erosion Control Blankets/Mats

Comment 1E

Land disturbance of more than 1 acre may require a CWA, section 402(p) storm water permit, including a National Pollutant Discharge Elimination System General Construction Storm Water

Permit, Water Quality Order (WOO) 2009-0009-DWQ, obtained from the State Water Board, or individual storm water permit obtained from the Lahontan Water Board.

Stream bed alteration and/or discharge of fill material to a surface water may require a CWA, section 401 water quality certification for impacts to federal waters (waters of the U.S.), or dredge and fill waste discharge requirements for impacts to nonfederal waters, both issued by the Lahontan Water Board.

Response 1E

A section 402 permit is anticipated and will be applied for during Final Design of the project. Stream bed alteration and/or discharge of fill material to a surface water is not anticipated with the project. While the Santa Fe Wash is located just east of the project footprint, the project boundaries near the Santa Fe Wash shall be staked with Environmentally Sensitive Area fencing on the project-side of the channel to ensure equipment does not encroach into the channel. This is noted in measure BIO-14. Additionally, measure BIO-14 has been modified to state “Santa Fe Wash” instead of “unnamed tributary.”

California Department of Fish and Wildlife, letter dated July 10, 2014

State of California – Natural Resources Agency
DEPARTMENT OF FISH AND WILDLIFE
Inland Deserts Region
3602 Inland Empire Blvd, Suite C-220
Ontario, CA 91764
www.wildlife.ca.gov

EDMUND G. BROWN JR., Governor
CHARLTON H. BONHAM, Director

July 10, 2014

Brian Gengler, PE, City Engineer
City of Victorville Public Works Division
14343 Civic Drive,
Victorville, CA 923292-2399

Re: Draft Initial Study and Proposed Mitigated Negative Declaration for the Bear Valley Road Overhead at Burlington North Santa Fe (BSNF) Railroad Project. State Clearing House Number: 2014061040.

Dear Mr. Gengler:

The California Department of Fish and Wildlife (CDFW) is providing comments on the Initial Study and Mitigated Negative Declaration (ISMND) for the Bear Valley Road Overhead at Burlington North Santa Fe (BNSF) Railroad Project. The project is along Bear Valley Road, from 300 feet west of Industrial Boulevard to approximately 400 feet east of Ridgecrest road, over the BNSF Railroad in the City of Victorville, San Bernardino County.

CDFW is providing the following comments and recommendations on the project in our role as the State's trustee for fish and wildlife resources, and as a responsible agency under the California Environmental Quality Act (CEQA), California Public Resources Codes §21000 et seq.

Project Description

As described in the project description provided by the City of Victorville in cooperation with the California Department of Transportation, the proposed project will rehabilitate, retrofit, and widen the existing bridge on Bear Valley Road overhead BNSF Railroad. The project would require temporary disturbance of approximately 7.1 acres of disturbed desert scrub and permanent impacts to 1.1 acres of disturbed desert scrub (Project).

The bridge would be widened 32.25 feet to meet American Association of State Highway and Transportation Officials (AASHTO) standards and would be retrofitted to include pier protection walls/crash walls. The addition of the crash walls will require the bridge to be seismically retrofitted to meet current seismic standards. Additionally, the existing structure will require sealing of the deck with methacrylate resin and patching holes and sealing cracks where necessary in the slope protection to remove the structural deficient rating. The project includes widening

approaches to match the bridge widening as well as meeting the City of Victorville General Plan standards. Traffic signals at Industrial Boulevard and Ridgecrest Road would be modified.

Impacts on Biological Resources and Project Specific Comments:

Nesting Birds

CDFW recommends updated focused survey for active nests to be prepared before commencement of work. If active nest are found, the City of Victorville should consult with the CDFW and the United States Fish & Wildlife Service (USFWS) regarding appropriate action to comply with the Migratory Bird Treaty Act (MBTA) of 1918 and the Fish & Game Code of the State of California.

All activities (including disturbances to vegetation) should take place outside of the breeding bird season (February 1- August 31) to avoid take (including disturbances which would cause abandonment of active nests containing eggs and/or young). If project activities cannot avoid the breeding bird season, nest surveys should be conducted and active nests should be avoided and provided with a minimum buffer as determined by a biological monitor (CDFW recommends a minimum 500 foot buffer for all active raptor nests). 2A

Bats

CDFW recommends that a CDFW-approved Designated Biologist(s) survey each structure and the surrounding area that may be impacted by the project, for bats presence. Surveys should be conducted during the appropriate time of day and through the appropriate techniques to ensure detection of bats. If bats are found using any bridges, culverts, or shrubs within the project area, the Designated Biologist(s) shall identify the bats to the species level, and evaluate the colony to determine its size and significance. The bat survey shall include: 1) the exact location of all roosting sites (location shall be adequately described and recorded on a map), 2) the number of bats present at the time of visit (count or estimate), 3) each species of bat present shall be named (include how the species was identified), 4) the location, amount, distribution and age of all bat guano shall be described and pinpointed on a map, and 5) the type of roost: night roost (rest at night while out feeding) versus a day roost (resting during the day), must also be clearly stated. If any structures house a maternity colony of bats, construction activities should not occur during the recognized bat breeding season (March 1 to October 1). 2B

Coast Horned Lizards

A CDFW search on California Natural Diversity Data Base concluded that the Project area may be in the range of the Coast horned lizard. CDFW recommends a complete survey of the area and assessment for the species. The assessment should be conducted by a biologist knowledgeable of cost horned lizards, ecology, and field 2C

identification of the species. Surveys should be conducted during the appropriate season and time of day and included in the final ISMND for the Project. 2C (cont'd)

Plants

CDFW recommends a complete survey of the area and assessments for rare plants and rare plant natural communities. The survey needs to follow CDFW's 2009 Protocol for Surveying and Evaluating Impacts to Special Status Native Plant Populations and Natural Communities. A CDFW search on California Natural Diversity Data Base concluded that the Project area may have Desert cymopterus (*Cymopterus deserticola*), pinyon rockcress (*Boechera dispar*), Sagebrush loeflingia (Loeflingia squarrosa *var.artemisiarum*), Mojave monkey flower (*Mimulus mohavensis*), Short-joint beavertail (*Opuntia basilaris var. brachyclada*), Beaver dam breadroot (*Pediomelum Castoreum),* Southern mountains skullcap *(Scutellaria bolanderi ssp. Austromontana*), and San Bernardino aster (*Symphyotrichum defoliatum*). 2D
Please provide the survey results within the final ISMND.
The mentioned protocol survey can be found at:
(https://www.dfg.ca.gov/biogeodata/cnddb/pdfs/Protocols_for_Surveying_and_Evaluating_Impacts.pdf.)

Burrowing Owl

CDFW recommends that prior to the initiation of project activities, the Lead Agency conduct a burrowing owl habitat assessment. The assessment should be conducted by a biologist knowledgeable of burrowing owl habitat, ecology, and field identification of the species and burrowing owl sign. The assessment should consist of walking the project site to identify the presence of burrowing owl habitat. Burrowing owls use a variety of natural and modified habitats for nesting and foraging that is typically characterized by low growing vegetation. Burrowing owl habitat includes, but is not limited to: native and nonnative grassland, interstitial grassland with shrub lands, shrub lands with low density shrub cover, golf courses, drainage ditches, earthen berms, unpaved airfields, pastureland, dairies, fallow fields, and agricultural use areas. Burrowing owls typically use burrows made from fossorial (adapted for burrowing or digging) mammals such as ground squirrels or badgers, and often manmade structures such as earthen berms; cement culverts; cement, asphalt, rock, or wood debris piles; or openings beneath cement or asphalt pavement. If no suitable habitat is found on-site (i.e., if the site is completely covered in chaparral habitat, cement, or asphalt), no additional surveys are necessary. If suitable habitat is found onsite, burrowing owl surveys must be conducted during the breeding season of March 1 through August 31 in accordance with the CDFW Staff Report on the Burrowing Owl Mitigation (CDFW 2012). 2E

CDFW recommends focused surveys be conducted over all potential suitable habitat within the entire project site. The burrowing owl is protected under the Federal Migratory Bird Treaty Act (MBTA) of 1918 (50 C.F.R. Section 10.13) and Sections 3503, 3503.5 and 3513 of the FGC, which prohibit take of all birds and their nests including raptors.

Therefore, it is the responsibility of the project proponent to ensure compliance with these laws for the entire project site. } 2E

The Department appreciates the opportunity to comment on this Initial Study (SCH No. 2014061040). If you have any questions regarding this letter, please contact Heather Weiche, Environmental Scientist, at (909) 980-8706 or heather.weiche@wildlife.ca.gov.

Sincerely,

Ali Aghili
Senior Environmental Scientist (Supervisor)

cc: Heather Weiche
Chron

Comment 2A

Nesting Birds

CDFW recommends updated focused survey for active nests to be prepared before commencement of work. If active nest are found, the City of Victorville should consult with the CDFW and the United States Fish & Wildlife Service (USFWS) regarding appropriate action to comply with the Migratory Bird Treaty Act (MBTA) of 1918 and the Fish & Game Code of the State of California.

All activities (including disturbances to vegetation) should take place outside of the breeding bird season (February 1-·August 31) to avoid take (including disturbances which would cause abandonment of active nests containing eggs and/or young). If project activities cannot avoid the breeding bird season, nest surveys should be conducted and active nests should be avoided and provided with a minimum buffer as determined by a biological monitor (CDFW recommends a minimum 500 foot buffer for all active raptor nests).

Response to Comment 2A

Measure BIO-16 was revised to include these items.

Comment 2B

Bats

CDFW recommends that a CDFW-approved Designated Biologist(s) survey each structure and the surrounding area that may be impacted by the project, for bats presence. Surveys should be conducted during the appropriate time of day and through the appropriate techniques to ensure detection of bats. If bats are found using any bridges, culverts, or shrubs within the project area, the Designated Biologist(s) shall identify the bats to the species level, and evaluate the colony to determine its size and significance. The bat survey shall include: 1) the exact location of all roosting sites (location shall be adequately described and recorded on a map), 2) the number of bats present at the time of visit (count or estimate), 3) each species of bat present shall be named (include how the species was identified), 4) the location, amount, distribution and age of all bat guano shall be described and pinpointed on a map, and 5) the type of roost: night roost (rest at night while out feeding) versus a day roost (resting during the day), must also be clearly stated. If any b structures house a maternity colony of bats, construction activities should not occur during the recognized bat breeding season (March 1 to October 1).

Response to Comment 2B

A bat assessment report was inserted into Appendix D of the Final IS/MND. The report documents that bat assessment surveys did not identify bat habitation associated with the Bear Valley Road Overhead. Dokken Engineering biologist, Sarah Holm, surveyed the Bear Valley Road Overhead structure for potential roosting habitat components and the presence of urine staining/scat. Weather conditions during the survey were clear skies, little to no winds, good visibility, and temperatures at approximately 72 degrees Fahrenheit. There was no sign of

current or past bat habitation. The bridge is a concrete structure lacking suitable crevices, gaps or vertical clearance for bat day roosting; no sign of day or night roosting was observed (see photographs in the bat assessment). No urine staining, scat or auditory chirps indicative of bat habitation was observed.

Comment 2C

Coast Horned Lizards

A CDFW search on California Natural Diversity Data Base concluded that the Project area may be in the range of the Coast horned lizard. CDFW recommends a complete survey of the area and assessment for the species. The assessment should be conducted by a biologist knowledgeable of coast horned lizards, ecology, and field identification of the species. Surveys should be conducted during the appropriate season and time of day and included in the Final IS/MND for the Project.

Response to Comment 2C

A memo documenting a coast horned lizard survey for the Bear Valley Road Overhead at BNSF Railroad Project was inserted into Appendix D of the Final IS/MND. While the area northwest of the bridge contains potentially suitable habitat for coast horned lizard, the species was not observed during the survey. Presence of canine predators, high traffic volumes on Bear Valley Road and the BNSF Railroad, and other human disturbance could be factors that limit the success of coast horned lizards in this area. The survey was conducted by biologist, Scott Salembier, who is knowledgeable of coast horned lizards, their ecology, and field identification of the species. The survey was conducted on August 7th, 2014 between 8:30 a.m. and 11:00 a.m.

Comment 2D

Plants

CDFW recommends a complete survey of the area and assessments for rare plants and rare plant natural communities. The survey needs to follow CDFW's 2009 Protocol for Surveying and Evaluating Impacts to Special Status Native Plant Populations and Natural Communities. A CDFW search on California Natural Diversity Data Base concluded that the Project area may have Desert cymopterus *(Cymopterus deserticola),* pinyon rockcress *(Boechera dispar),* Sagebrush loeflingia (*Loeflingia squarrosa var.artemisiarum),* Mojave monkey flower *(Mimulus mohavensis),* Short-joint beavertail *(Opuntia basilaris var. brachyclada),* Beaver dam breadroot *(Pediomeum Castoreum),* Southern mountains skullcap *(Scutellaria bolanderi ssp. Austromontana),* and San Bernardino aster (*Symphyotrichum defoliatum).* Please provide the survey results within the Final IS/MND. The mentioned protocol survey can be found at: (https://www.dfg.ca.gov/biogeodata/cnddb/pdfs/ProtocolsforSurveying_and_Evaluating_Impacts.pdf.)

Response to Comment 2D

A complete survey and assessment for rare plants and rare plant natural communities was conducted following the CDFW's 2009 *Protocol for Surveying and Evaluating Impacts to Special Status Native Plant Populations and Natural Communities*. The rare plant survey was conducted on April 2 and 3, 2014 and the survey log sheets have been added to the Final IS/MND in Appendix D. As discussed in the *Natural Environment Study-Minimal Impacts* report for this project, habitat was assessed and determined unsuitable for Mojave monkey flower, pinyon rockcress, southern mountains skullcap, and San Bernardino aster; focused surveys confirmed habitat is unsuitable for these species. No sensitive plant species were observed during the appropriate spring blooming season, therefore, desert cymopterus, pinyon rockcress, sagebrush loelinglia, Mojave monkey flower, short-joint beavertail, beaver dam breadroot, southern mountains skullcap, San Bernardino aster, and other sensitive rare plant species are presumed absent.

Comment 2E

Burrowing Owl

CDFW recommends that prior to the initiation of project activities, the Lead Agency conduct a burrowing owl habitat assessment. The assessment should be conducted by a biologist knowledgeable of burrowing owl habitat, ecology, and field identification of the species and burrowing owl sign. The assessment should consist of walking the project site to identify the presence of burrowing owl habitat. Burrowing owls use a variety of natural and modified habitats for nesting and foraging that is typically characterized by low growing vegetation. Burrowing owl habitat includes, but is not limited to: native and nonnative grassland, interstitial grassland with shrub lands, shrub lands with low density shrub cover, golf courses, drainage ditches, earthen berms, unpaved airfields, pastureland, dairies, fallow fields, and agricultural use areas. Burrowing owls typically use burrows made from fossorial (adapted for burrowing or digging) mammals such as ground squirrels or badgers, and often manmade structures such as earthen berms; cement culverts; cement, asphalt, rock, or wood debris piles; or openings beneath cement or asphalt pavement. If no suitable habitat is found on-site (i.e., if the site is completely covered in chaparral habitat, cement, or asphalt), no additional surveys are necessary. If suitable habitat is found onsite, burrowing owl surveys must be conducted during the breeding season of March 1 through August 31 in accordance with the CDFW Staff Report on the Burrowing Owl Mitigation (CDFW 2012). CDFW recommends focused surveys be conducted over all potential suitable habitat within the entire project site. The burrowing owl is protected under the Federal Migratory Bird Treaty Act (MBTA) of 1918 (50 C.F.R. Section 10.13) and Sections 3503, 3503.5 and 3513 of the FGC, which prohibit take of all birds and their nests including raptors. Therefore, it is the responsibility of the project proponent to ensure compliance with these laws for the entire project site.

Response to Comment 2E

As discussed in the IS, the project site does have adequate habitat for burrowing owl. Accordingly, measure BIO-4 requires a burrowing owl pre-construction survey in accordance with the 2012 *CDFW Staff Report on Burrowing Owl Mitigation.*

Comment 3: California Public Utilities Commission, letter dated July 10, 2014

STATE OF CALIFORNIA EDMUND G. BROWN JR., *Governor*

PUBLIC UTILITIES COMMISSION
320 WEST 4TH STREET, SUITE 500
LOS ANGELES, CA 90013

July 10, 2014

Mr. Brian Gengler
City of Victorville
14343 Civic Drive
Victorville, California 92392-2399

Dear Mr. Gengler:

Re: SCH 2014061040 Victorville Bear Valley Road Overhead at BNSF Railroad, DMND

The California Public Utilities Commission (Commission) has jurisdiction over the safety of highway-rail crossings (crossings) in California. The California Public Utilities Code requires Commission approval for the construction or alteration of crossings and grants the Commission exclusive power on the design, alteration, and closure of crossings. The Commission's Rail Crossings Safety Section (RCSS) is in receipt of the draft *Mitigated Negative Declaration (DMND)* for the proposed City of Victorville (City) Bear Valley Road Overhead at BNSF Railroad project from the State Clearinghouse.

According to the DMND, the City proposes to widen the Bear Valley Road Overhead at the BNSF Railroad crossing, including rehabilitating, retrofitting, and widening the existing bridge to meet current AASHTO safety standards and super arterial standard roadway configurations set forth by the City. The project is between Industrial Boulevard and Ridgecrest Road, approximately 3.8 miles east of I-15. The Bear Valley Road bridge crosses over the BNSF Railroad. This grade separated crossing is identified as CPUC ID 002-37.10-A and DOT No. 026080V.

The modifications proposed to the existing crossing require authorization through the Commission's General Order (GO) 88-B process. If interested parties do not reach agreement regarding proposed modifications, a Formal Application to the Commission will be required instead. Prior to submission of a GO 88-B request or a formal application for authorization, the City needs to meet and discuss with RCSS staff, BNSF and all interested parties for relevant safety issues at the crossing location. Please continue to keep RCSS informed of the project's development. The following link provides more information on the Commission's GO 88-B and formal crossing application process: http://www.cpuc.ca.gov/PUC/safety/Rail/Crossings/index.htm. 3A

If you have any questions, please contact Ken Chiang at (213) 576-7076 or ykc@cpuc.ca.gov, or Sergio Licon at (213) 576-7085 or sergio.licon@cpuc.ca.gov.

Sincerely,

Ken Chiang, PE
Utilities Engineer
Rail Crossings Safety Section
Safety and Enforcement Division

CC: State Clearinghouse, P.O. Box 3044, Sacramento, CA 95812-3044

Comment 3A

The modifications proposed to the existing crossing require authorization through the Commission's General Order (GO) 88-B process. If interested parties do not reach agreement regarding proposed modifications, a Formal Application to the Commission will be required instead. Prior to submission of a GO 88-B request or a formal application for authorization, the City needs to meet and discuss with RCSS staff, BNSF and all interested parties for relevant safety issues at the crossing location. Please continue to keep RCSS informed of the project's development. The following link provides more information on the Commission's GO 88-B and formal crossing application process: http://www.cpuc.ca.gov/PUC/safety/Rail/Crossings/index.htm.

Response 3A

Thank you for your comment. The City will continue coordination with the Rail Crossings Safety Section (RCSS) of the California Public Utilities commission as part of the final design phase. Coordination will include the GO 88-B process for modifications proposed to the existing crossing.

Comment 4: California State Clearinghouse, letter dated July 14, 2014

STATE OF CALIFORNIA
Governor's Office of Planning and Research
State Clearinghouse and Planning Unit

Edmund G. Brown Jr.
Governor

Ken Alex
Director

July 14, 2014

RECEIVED
JUL 17 2014
ENGINEERING DEPT.

Brian Gengler
City of Victorville
14343 Civic Drive
P.O. Box 5001
Victorville, CA 92392-2399

Subject: Bear Valley Road Overhead at BNSF Railroad Project
SCH#: 2014061040

Dear Brian Gengler:

The State Clearinghouse submitted the above named Mitigated Negative Declaration to selected state agencies for review. On the enclosed Document Details Report please note that the Clearinghouse has listed the state agencies that reviewed your document. The review period closed on July 10, 2014, and the comments from the responding agency (ies) is (are) enclosed. If this comment package is not in order, please notify the State Clearinghouse immediately. Please refer to the project's ten-digit State Clearinghouse number in future correspondence so that we may respond promptly. 4A

Please note that Section 21104(c) of the California Public Resources Code states that:

> "A responsible or other public agency shall only make substantive comments regarding those activities involved in a project which are within an area of expertise of the agency or which are required to be carried out or approved by the agency. Those comments shall be supported by specific documentation."

These comments are forwarded for use in preparing your final environmental document. Should you need more information or clarification of the enclosed comments, we recommend that you contact the commenting agency directly.

This letter acknowledges that you have complied with the State Clearinghouse review requirements for draft environmental documents, pursuant to the California Environmental Quality Act. Please contact the State Clearinghouse at (916) 445-0613 if you have any questions regarding the environmental review process. 4A (cont'd)

Sincerely,

Scott Morgan
Director, State Clearinghouse

Enclosures
cc: Resources Agency

1400 TENTH STREET P.O. BOX 3044 SACRAMENTO, CALIFORNIA 95812-3044
TEL (916) 445-0613 FAX (916) 323-3018 www.opr.ca.gov

Document Details Report
State Clearinghouse Data Base

SCH# 2014061040
Project Title Bear Valley Road Overhead at BNSF Railroad Project
Lead Agency Victorville, City of

Type MND Mitigated Negative Declaration

Description The City of Victorville proposes to widen the Bear Valley Road Overhead at the Burlington Northern Santa Fe (BNSF) Railroad crossing. The proposed project consists of rehabilitating, retrofitting, and widening the existing bridge which carries Bear Valley Road over the BNSF Railroad in order to meet current AASHTO safety standards and Super Arterial standard roadway configurations set forth by the City of Victorville. The project is located along Bear Valley Road, between Industrial Boulevard and Ridgecrest Road, approximately 3.8 miles east of I-15.

Lead Agency Contact

Name Brian Gengler
Agency City of Victorville
Phone 760 955 5156 **Fax**
email
Address 14343 Civic Drive
P.O. Box 5001
City Victorville **State** CA **Zip** 92392-2399

Project Location

County San Bernardino
City Victorville
Region
Lat / Long 34° 28' 16.8" N / 117° 16' 46.2" W
Cross Streets Bear Valley Road between Industrial Blvd and Ridgecrest Rd
Parcel No. 3091-191-09, 0399-131-22
Township 4/5N **Range** 4W **Section** 2/3 **Base** SBB&M

Proximity to:

Highways
Airports
Railways UPRR
Waterways Mojave River
Schools Endeavor, Lakeview
Land Use Comm. Manufacturing, Gen. Commercial, Neighborhood Retail, Industrial, Gen. Comm., High Density Res., Gen. Indust.

Project Issues Aesthetic/Visual; Agricultural Land; Air Quality; Archaeologic-Historic; Biological Resources; Geologic/Seismic; Minerals; Noise; Population/Housing Balance; Public Services; Recreation/Parks; Soil Erosion/Compaction/Grading; Toxic/Hazardous; Traffic/Circulation; Vegetation; Water Quality; Landuse; Other Issues

Reviewing Agencies Resources Agency; Department of Fish and Wildlife, Region 6; Department of Parks and Recreation; Department of Water Resources; Office of Emergency Services, California; California Highway Patrol; Caltrans, District 8; Air Resources Board; Regional Water Quality Control Bd., Region 6 (Victorville); Department of Toxic Substances Control; Native American Heritage Commission; Public Utilities Commission

Date Received 06/11/2014 **Start of Review** 06/11/2014 **End of Review** 07/10/2014

Comment 4A: The review period closed on July 10, 2014, and the comments from the responding agency (ies) is (are) enclosed. This letter acknowledges that you have complied

with the State Clearinghouse review requirements for draft environmental documents, pursuant to the California Environmental Quality Act.

Response 4A: Letters forwarded by the State Clearinghouse were from the Lahonton Regional Water Quality Control Board (dated July, 9, 2014) and California Department of Fish and Wildlife (dated July 10, 2014). These letters are included elsewhere in this Appendix of Responses to Public Comments.

EXHIBIT 5

Right of Way Certification
TCE Removal Map

Exhibit 13-B Right of Way Certification
LOCAL ASSISTANCE PROJECT
(Off State Highway System)

Local Agency: City of Victorville

NOTE: This form is intended for use on local assistance projects, off the State Highway System (SHS), where federal funds are used and utility relocations, railroad involvement and/or where Right of Way (R/W) or rights in real property may be required. This form could also be used when work required for local agency projects *is located primarily off the SHS but may also* encroach onto the SHS. ***(Eliminate this paragraph before submitting document to your DLAE)***

Right of Way Certification No.: 1 Project ID: BHLS-5380(026)
(Insert 1, 2, or 3 for the type of Certification being made)

Project Location: City of Victorville along Bear Valley Road

General Project Description: This project is widening Bear Valley Road (an existing grade separation and roadway) crossing the Burlington Northern and Sante Fe (BNSF) Railroad from Industrial Boulevard to Ridgecrest Road.

1. STATUS OF REQUIRED RIGHT OF WAY:

No acquisition of right of way is required. All proposed work is within existing right of way OR Right of Way (has been) (will be) acquired in accordance with applicable policy and procedure covering the acquisition of real property. Local Agency (has) (will have) legal and physical possession and right to enter on all lands as follows:

A. Total number of parcels required[1]: 7

For items A 1-8 below and B on page 2, if total at time of completing certification is 0, enter 0 on the number line (or B line) and eliminate corresponding table/s.

1. Parcels acquired (escrow closed or Final Order of Condemnation recorded): 7

(To add table rows below, set cursor to right of last column in empty table set, then press enter, additional table rows will populate.)

Parcel Number	Owner	Project R/W Required[2]	Excess (Yes or No)	Close of Escrow/Final Order of Condemnation Date
3091-281-03	Jesus Herrera	TCE	No	COE 10/19/2018 TCE Expires 07/2025
3091-281-06	Life Institute Leaders Inc.	TCE	No	COE 12/14/2018 TCE Expires 08/2025
3091-281-10	LTVN Marketing Inc.	TCE	No	COE 12/12/2018 TCE Expires 8/2020
3091-281-12	Mar Mari LLC	TCE	No	COE 06/14/2019 TCE Expires 07/2025
3091-421-06	Ridgecrest Business Park Maintenance Corporation	TCE	No	COE 05/21/2018 TCE Expires 8/2020
3091-281-07	Victorville Speedwash Property, L	TCE	No	COE 10/3/2019 TCE Expires 08/2025
3091-191-09	BNSF Railway Company	Overpass Agreement	No	COE 4/30/2020 TCE Expires 12/2020

[1] Parcels listed in items A1-A7 on pages 1 and 2 should total the number shown on line 1A above.

[2] Items A1-A7: List as full acquisition, partial acquisition, fee, permanent easement (including type), temporary construction easement, etc. Detail should be added showing expiration dates of documents with fixed termination dates, i.e., temporary easements.

2. Parcels covered by Order for Possession: 0
3. Parcels covered by executed Right of Way Contract with Possession Clause: 0
4. Parcels covered by Possession and Use Agreement only: 0
5. Parcels covered by Right of Entry only (Requires HQs R/W and FHWA pre-approval)[3]: 0
6. Parcels Covered by Resolution of Necessity only[4]: 0
7. Parcels covered by other acquisition documents as follows[5]: 0

B. Construction Permits, other required permits[6]: 0

2. STATUS OF ACCESS CONTROL:

Conventional Highway, a highway with no control of access. Abutting property owners have access rights.

3. STATUS OF AFFECTED RAILROAD OPERATING FACILITIES -

The BNSF Railroad (and when needed, the Public Utilities Commission) has approved the proposed work, which is within the railroad right of way and does require the adjustment of railroad facilities. The railroad, or its contract forces, will provide the necessary labor, materials and/or equipment to adjust their facilities. The necessary clauses will be placed in the contract special provisions. The project may now be advertised.

CPUC Approval Type and Date: 07/15/2020

C&M Execution Date: 12/21/2020

4. MATERIAL SITE(S) -

None required.

5. DISPOSAL SITE(S) -

None required.

6. STATUS OF REQUIRED UTILITY RELOCATIONS:

All utility work has been or will be completed in accordance with applicable policy and procedure covering the adjustment of utility facilities. All utility notices have been issued and arrangements have been made with the owners of all conflicting utility encroachments remaining within the right

[3] Rights of Entry must only be used in emergencies, or extremely unusual/extraordinary circumstances. All Rights of Entry must be pre-approved by the Division of HQs RW&LS and approved by FHWA. Funds must be deposited into an escrow account and be made available (able to withdraw), as legally permissible, to the grantor/s, as a condition of using a right of entry.

[4] To be used only rarely in a Certification No. 3; Resolution of Necessity must be adopted and the Order for Possession served, but is not yet effective.

[5] This section covers acquisitions where the document is a license, permit etc., not otherwise covered by A1-A6 above. Examples include Licenses from State Lands Commission, Flood Control Districts, and Letters of Consent from US Forest Service.

[6] These permits are not counted as parcels, are not appraised, recorded, or require payment (e.g. Permits to Enter).

of way, so that adequate control of the project right of way will be achieved. If applicable, federal participation has been determined.

(AND)

All necessary arrangements have been made for remaining utility work to be completed as required for proper coordination with project construction. The special provisions in the contract provide for the coordination (see schedule below).

☐ Project specific utility agreement(s) is(are) fully executed and include(s) the Buy America language.

☒ Buy America compliance is not applicable for utility relocations as Utility Agreements are not required.

(AND when applicable)

The following utilities are located within the project Rights of Way but require no relocation:

Company	Type Facility
City of Victorville	Water and Sewer
Frontier Communications	Communication
Hesperia Water District	Water and Sewer
MCI	Fiber Optic
Southern California Edison	Electrical
Southwest Gas	Gas
Victor Valley Waster Reclamation Authority	Sewer

The following utilities are in conflict with the project and require relocation as follows: (If applicable)

R/W Notice and Notice Date	Company	Type of Facility	Liability % (Owner=O) (Local Agency=C)	Utility Agreement. Date	Federal Participation (yes/no)[7]	Relocation Date & End Concurrent with construction (or) Bid Item/s listed below[8]
1 07/16/2020	Charter	Communication	O=100% C=0%	N/A	No	Concurrent

7. RIGHT OF WAY CLEARANCE:

There were no improvements or obstructions located within the limits of this project.

[7] A copy of Specific Authorization to Relocate Utility Facilities memorandum must be attached for each facility relocation item.
[8] Additional information is required for each bid item if highway contractor will complete work as part of the highway contract.

8. AIRSPACE AGREEMENTS:

There are no airspace lease properties within the limits of this project.

9. COMPLIANCE WITH RELOCATION ASSISTANCE PROGRAM REQUIREMENTS

Compliance was not required as there were no displacements for this project.

10. COOPERATIVE AGREEMENTS

None required.

11. ENVIRONMENTAL MITIGATION

No environmental mitigation parcels are required for this project.

12. INDEMNIFICATION BY LOCAL AGENCY

The Local Agency agrees to indemnify, defend, and hold harmless the Department of Transportation (Caltrans) from any and all liabilities which may result in the event the right of way for this project is not clear as certified. The Local Agency shall pay from its own non-matching funds, any costs which arise out of delays to the construction of the project because utility facilities have not been removed or relocated, or because rights of way have not been made available to Local Agency for the orderly performance of the project work.

13. CERTIFICATION (USE THE APPROPRIATE STATEMENT)

I hereby certify the right of way on this project as conforming to 23 CFR 635.309(b) **and** (c)(1) or (c)(2). The project may be advertised with contract award being made at any time.

Local Agency: City of Victorville

Project ID: BHLS-5380(026) As Authorized by Resolution No.: 17-006

By: Brian Gengler 2-22-2020
Date

Brian Gengler, City Engineer
Title

The undersigned Caltrans Official has reviewed this Right of Way Certification as to form and content. Based on the review of the documents submitted, the Certificate is accepted on behalf of the local public agency.

Accepted as to form and content:

By: _____ _____
District Deputy Director/Office Chief – Right of Way Date
(or person authorized in writing to sign)

Distribution:
1) Local Agency completes and sends to DLAE for approval.
2) DLAE approves and returns to Local Agency.
3) Local Agency retains approved original in project files.

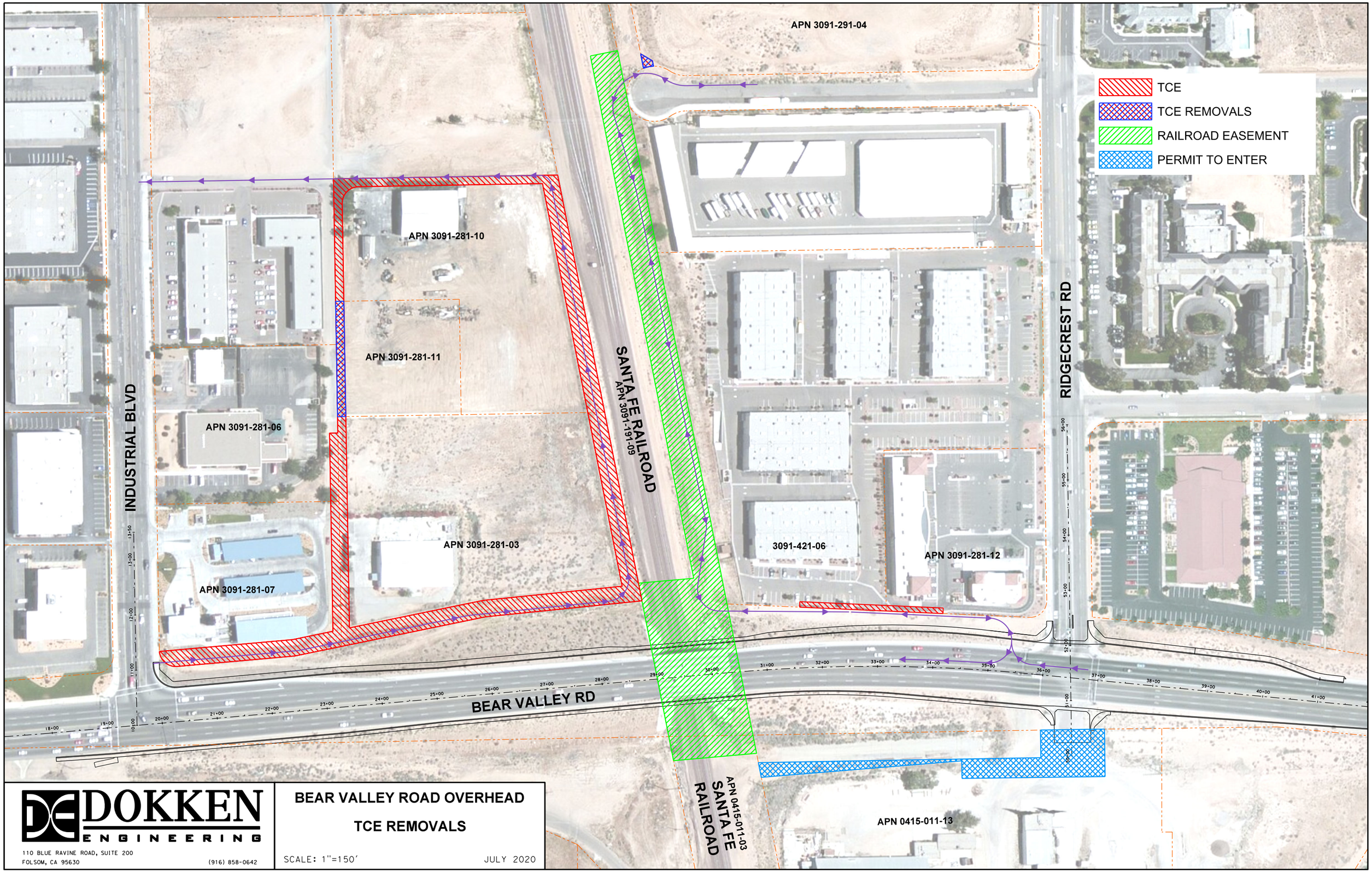

DOKKEN ENGINEERING

110 BLUE RAVINE ROAD, SUITE 200
FOLSOM, CA 95630
(916) 858-0642

BEAR VALLEY ROAD OVERHEAD

TCE REMOVALS

SCALE: 1"=150'

JULY 2020

EXHIBIT 6

Overpass Agreement with BNSF Railway, December 2017

CPUC Authorization to Alter Highway-Rail Crossing Pursuant to GO 88-B, July 2020

RECEIVED
SEP 11 2017
ENGINEERING

BNSF Railway

ENGINEERING SERVICES DEPARTMENT

OVERPASS AGREEMENT

Between

THE BNSF RAILWAY

and

CITY OF VICTORVILLE

September 8, 2017

BNSF File No. BF-10010125
LOCATION: City of Victorville, CA
Railroad LS 7600 MP 41.587

OVERPASS AGREEMENT

BNSF File No. BF10010125
Bear Valley Cutoff Overpass
U.S. D.O.T. No. 026086L
LS 7600
MP 41.587
Cajon Subdivision

This Agreement **("Agreement")**, is executed to be effective as of December 11, 2017 **("Effective Date")**, by and between BNSF RAILWAY COMPANY, a Delaware corporation **("BNSF"),** and the City of Victorville, a political subdivision of the State of California **("Agency").**

RECITALS:

WHEREAS, BNSF owns and operates a line of railroad in and through the City of Victorville, State of California; and

WHEREAS, the line of railroad exists on an easement within a portion of APN 3091-191-09 outlined in document CL 3507 dated October 1st 1903; and

WHEREAS, the Agency proposes to widen the existing Bear Valley Cutoff Overpass to accommodate the construction of sidewalks, shoulders, and a median; and

WHEREAS, the Agency proposes to retrofit the bridge including seismic and the construction of pier protection walls; and

WHEREAS, the Agency proposes to rehabilitate the bridge by sealing the deck with methacrylate resin, patching holes, and sealing the cracks in the concrete; and

WHEREAS, the Agency will reconstruct, own, operate, and maintain the Bear Valley Cutoff Overpass Structure as described in Article 1 below.

NOW, THEREFORE, in consideration of the mutual covenants and agreements of the parties contained herein, the receipt and sufficiency of which are hereby acknowledged, the parties agree as follows:

ARTICLE I) SCOPE OF WORK

1. The term **"Project"** as used herein includes any and all work related to the construction of the proposed Bear Valley Cutoff Overpass (hereinafter referred to as the

"Structure"), more particularly described on the Exhibit A attached hereto and incorporated herein, including, but not limited to, any and all changes to telephone, telegraph, signal and electrical lines and appurtenances, temporary and permanent track work, fencing, grading, alterations to or new construction of drainage facilities, preliminary and construction engineering and contract preparation. Additionally, temporary controls during construction must be in compliance with Section 8A-08, "Temporary Traffic Control Zones" of the Manual of Uniform Traffic Control Devices ("MUTCD"), U.S. Department of Transportation.

ARTICLE II) BNSF OBLIGATIONS

In consideration of the covenants of Agency set forth herein and the faithful performance thereof, BNSF agrees as follows:

1. Upon Agency's payment to BNSF of an administrative fee in the sum of Two Thousand and No/100 Dollars ($2,000), together with the Temporary Construction License Fee in the sum of Twenty Thousand Four Hundred and No/100 Dollars ($20,400.00), BNSF hereby grants to Agency, its successors and assigns, upon and subject to the terms and conditions set forth in this Agreement, a temporary non-exclusive license (hereinafter called, "Temporary Construction License") to construct the Structure across or upon the portion of BNSF's right-of-way described further on Exhibit A-1, excepting and reserving BNSF's rights, and the rights of any others who have obtained, or may obtain, permission or authority from BNSF, to do the following:

(a) Operate, maintain, renew and/or relocate any and all existing railroad track or tracks, wires, pipelines and other facilities of like character upon, over or under the surface of said right-of-way;

(b) Construct, operate, maintain, renew and/or relocate upon said right-of-way, without limitation, such facilities as the BNSF may from time to time deem appropriate, provided such facilities do not materially interfere with the Agency's use of the Structure;

(c) Otherwise use or operate the right-of-way as BNSF may from time to time deem appropriate, provided such use or operations does not materially interfere with the Agency's use of the Structure; and

(d) Require the Agency or its contractor to execute a Temporary Construction Crossing Agreement, for any temporary crossing requested to aid in the construction of this Project.

The term of the Temporary Construction License begins on the Effective Date and ends on the earlier of (i) substantial completion of the Structure, or (ii) Thirty Six (36) months following the Effective Date. The Temporary Construction License and related rights given by BNSF to Agency in this provision are without warranty of title of any kind, express or implied, and no covenant of warranty of title will be implied from the use of any word or words herein contained. The Temporary Construction License is for construction

of the Structure only and shall not be used by Agency for any other purpose. Agency acknowledges and agrees that Agency shall not have the right, under the Temporary Construction License, to use the Structure for any other purpose than (i) construction, or (ii) the ongoing passage of pedestrian and vehicular traffic over the Structure. In the event Agency is evicted by anyone owning, or claiming title to or any interest in said right-of-way, BNSF will not be liable to Agency for any damages, losses or any expenses of any nature whatsoever. The granting of similar rights to others, subsequent to the date of this Agreement, will not impair or interfere with the rights granted to Agency herein.

Upon Agency's payment to BNSF of the additional sum of Six Thousand One Hundred and No/100 Dollars ($6,100.00), such payment to be made within thirty (30) days of issuing the Notice to Proceed pursuant to Article III, Section 17 of this Agreement, and provided further that Agency is in compliance with the term and conditions of this Agreement, BNSF will grant to Agency, its successors and assigns, an easement (hereinafter called, the "Easement") to enter upon and use that portion of BNSF's right-of-way as is necessary to use and maintain the Structure, substantially in the form of Exhibit B attached to this Agreement. If Agency fails to pay BNSF within the thirty day time period set forth in the preceding sentence, BNSF may stop construction of the Project until full payment is received by BNSF.

2. BNSF will furnish all labor, materials, tools, and equipment for railroad work required for the construction of the Project, such railroad work and the estimated cost thereof being as shown on Exhibit D attached hereto and made a part hereof. In the event construction on the Project has not commenced within six (6) months following the Effective Date, BNSF may, in its sole and absolute discretion, revise the cost estimates set forth in said Exhibit D. In such event, the revised cost estimates will become a part of this Agreement as though originally set forth herein. Any item of work incidental to the items listed on Exhibit D not specifically mentioned therein may be included as a part of this Agreement upon written approval of Agency, which approval will not be unreasonably withheld. Construction of the Project must include the following railroad work by BNSF:

(a) Procurement of materials, equipment and supplies necessary for the railroad work;

(b) Preliminary engineering, design, and contract preparation;

(c) Furnishing of flagging services during construction of the Project as required and set forth in further detail on Exhibit C;

(d) Furnishing engineering and inspection as required in connection with the construction of the Project;

(e) Providing a contract project coordinator, at Agency's expense, to serve as a project manager for the Project;

3. BNSF will do all railroad work set forth in Article II, Section 2 above on an actual cost basis, when BNSF, in its sole discretion, determines it is required by its labor agreements to perform such work with its own employees working under applicable collective bargaining agreements.

4. Agency agrees to reimburse BNSF for work of an emergency nature caused by Agency or Agency's contractor in connection with the Project which BNSF deems is reasonably necessary for the immediate restoration of railroad operations, or for the protection of persons or BNSF property. Such work may be performed by BNSF without prior approval of Agency and Agency agrees to fully reimburse BNSF for all such emergency work, which may be caused by City or City's contractor.

5. BNSF may charge Agency for insurance expenses, including self-insurance expenses, when such expenses cover the cost of Employer's Liability (including, without limitation, liability under the Federal Employer's Liability Act) in connection with the construction of the Project. Such charges will be considered part of the actual cost of the Project, regardless of the nature or amount of ultimate liability for injury, loss or death to BNSF's employees, if any.

6. During the construction of the Project, BNSF will send Agency progressive invoices detailing the costs of the railroad work performed by BNSF under this Agreement. Agency must reimburse BNSF for completed force-account work within thirty (30) days of the date of the invoice for such work. Upon completion of the Project, BNSF will send Agency a detailed invoice of final costs, segregated as to labor and materials for each item in the recapitulation shown on Exhibit D. Pursuant to this section and Article IV, Section 7 herein, Agency must pay the final invoice within ninety (90) days of the date of the final invoice. BNSF will assess a finance charge of .033% per day (12% per annum) on any unpaid sums or other charges due under this Agreement which are past its credit terms. The finance charge continues to accrue daily until the date payment is received by BNSF, not the date payment is made or the date postmarked on the payment. Finance charges will be assessed on delinquent sums and other charges as of the end of the month and will be reduced by amounts in dispute and any unposted payments received by the month's end. Finance charges will be noted on invoices sent to Agency under this section. **For purposes of computing the time limits prescribed by Section 911.2 of the California Government Code for the presentment of a claim against the Agency the cause of action for failure to reimburse BNSF for the costs of the Railroad work performed by it pursuant to this Agreement shall be deemed to have accrued one hundred and eighty (180) days of the date of the final invoice.**

ARTICLE III) AGENCY OBLIGATIONS

In consideration of the covenants of BNSF set forth herein and the faithful performance thereof, Agency agrees as follows:

1. Agency must furnish to BNSF plans and specifications for the Project. Four sets of said plans (reduced size 11" x 17"), together with two copies of calculations, and two copies of specifications in **English Units**, must be submitted to BNSF for approval prior to commencement of any construction. BNSF will give Agency final written approval of the plans and specifications substantially in the form of Exhibit E, attached to this Agreement and made a part hereof. Upon BNSF's final written approval of the plans and specifications, said plans and specifications will become part of this Agreement and are hereby incorporated herein. Any approval of the plans and specifications by BNSF shall in no way obligate BNSF in any manner with respect to the finished product design and/or construction. Any approval by BNSF shall mean only that the plans and specifications meet the subjective standards of BNSF, and such approval by BNSF shall not be deemed to mean that the plans and specifications or construction is structurally sound and appropriate or that such plans and specifications meet applicable regulations, laws, statutes or local ordinances and/or building codes.

2. Agency must make any required application and obtain all required permits and approvals for the construction of the Project.

3. Agency must provide for and maintain minimum vertical and horizontal clearances, as required in Exhibit C and as approved by BNSF as part of the plans and specifications for the Project.

4. Agency must acquire all rights of way necessary for the construction of the Project.

5. Agency must make any and all arrangements, in compliance with BNSF's Utility Accommodation Manual (http://www.bnsf.com/communities/faqs/pdf/utility.pdf), for the installation or relocation of wire lines, pipe lines and other facilities owned by private persons, companies, corporations, political subdivisions or public utilities other than BNSF which may be necessary for the construction of the Project.

6. Agency must construct the Project as shown on the attached Exhibit A and do all work ("Agency's Work") provided for in the plans and specifications for the Project, except railroad work that will be performed by BNSF hereunder. Agency must furnish all labor, materials, tools and equipment for the performance of Agency's Work. The principal elements of Agency's Work are as follows:

(a) Construction of the Structure;

(b) All necessary grading and paving, including backfill of excavations and restoration of disturbed vegetation on BNSF's right-of-way;

(c) Provide suitable drainage, both temporary and permanent;

(d) Provide appropriate pedestrian control during construction;

(e) Installation and maintenance of an 8-ft. high fence and/or concrete combination (throw fence) on the outside barrier of the Structure;

(f) Job site cleanup including removal of all construction materials, concrete debris, surplus soil, refuse, contaminated soils, asphalt debris, litter and other waste materials to the satisfaction of BNSF;

7. Agency must apply and maintain said D.O.T. Crossing number 026086L in a conspicuous location on the Structure.

8. Agency's Work must be performed by Agency or Agency's contractor in a manner that will not endanger or interfere with the safe and timely operations of BNSF and its facilities.

9. For any future inspection or maintenance, either routine or otherwise, performed by subcontractors on behalf of the Agency, Agency shall require the subcontractors to comply with the provisions of the attached Exhibit C and execute the agreement attached hereto as Exhibit C-1. Prior to performing any future maintenance with its own personnel, Agency shall: comply with all of BNSF's applicable safety rules and regulations; require any Agency employee performing maintenance to complete the safety training program at the BNSF's Internet Website "**www.BNSFContractor.com**"; notify BNSF when, pursuant to the requirements of Exhibit C, a flagger is required to be present; procure, and have approved by BNSF's Risk Management Department, Railroad Protective Liability insurance.

10. Agency must require its contractor(s) to notify BNSF's Roadmaster at least thirty (30) calendar days prior to requesting a BNSF flagman in accordance with the requirements of Exhibit C attached hereto. Additionally, Agency must require its contractor(s) to notify BNSF's Manager of Public Projects thirty (30) calendar days prior to commencing work on BNSF property or near BNSF tracks.

11. Agency or its contractor(s) must submit four (4) copies of any plans (including two sets of calculations in **English Units**) for proposed shoring, falsework or cribbing to be used over, under, or adjacent to BNSF's tracks to BNSF's Manager of Public Projects for approval. The shoring, falsework or cribbing used by Agency's contractor shall comply with the BNSF Bridge Requirements set forth on Exhibit F and all applicable requirements promulgated by state and federal agencies, departments, commissions and other legislative bodies. If necessary, Agency must submit for approval two (2) copies of a professionally engineered demolition plan, as set forth in Exhibit G, with applicable calculations to BNSF's Manager of Public Projects.

12. Agency must include the following provisions in any contract with its contractor(s) performing work on said Project:

(a) The Contractor is placed on notice that fiber optic, communication and other cable lines and systems (collectively, the "Lines") owned by various telecommunications companies may be buried on BNSF's

property or right-of-way. The locations of these Lines have been included on the plans based on information from the telecommunications companies. The Contractor will be responsible for contacting BNSF's Engineering Representative – Greg Rousseau, BNSF's Signal Representative – Terry Brooks and the telecommunications companies and notifying them of any work that may damage these Lines or facilities and/or interfere with their service. The Contractor must also mark all Lines shown on the plans or marked in the field in order to verify their locations. The Contractor must also use all reasonable methods when working in the BNSF right-of-way or on BNSF property to determine if any other Lines (fiber optic, cable, communication or otherwise) may exist.

(b) The Provider will be responsible for the rearrangement of any facilities or Lines determined to interfere with the construction. The Contractor must cooperate fully with any telecommunications company(ies) in performing such rearrangements.

(c) Failure to mark or identify these Lines will be sufficient cause for BNSF's engineering representative (Greg Rousseau) to stop construction at no cost to the Agency or BNSF until these items are completed.

(d) In addition to the liability terms contained elsewhere in this Agreement, the Contractor hereby indemnifies, defends and holds harmless BNSF for, from and against all cost, liability, and expense whatsoever (including, without limitation, attorney's fees and court costs and expenses) arising out of or in any way contributed to by any act or omission of Contractor, its subcontractors, agents and/or employees that cause or in any way or degree contribute to (1) any damage to or destruction of any Lines by Contractor, and/or its subcontractors, agents and/or employees, on BNSF's property or within BNSF's right-of-way, (2) any injury to or death of any person employed by or on behalf of any telecommunications company, and/or its contractor, agents and/or employees, on BNSF's property or within BNSF's right-of-way, and/or (3) any claim or cause of action for alleged loss of profits or revenue by, or loss of service by a customer or user of such telecommunication company(ies). **THE LIABILITY ASSUMED BY CONTRACTOR WILL NOT BE AFFECTED BY THE FACT, IF IT IS A FACT, THAT THE DAMAGE, DESTRUCTION, INJURY, DEATH, CAUSE OF ACTION OR CLAIM WAS OCCASIONED BY OR CONTRIBUTED TO BY THE NEGLIGENCE OF BNSF, ITS AGENTS, SERVANTS, EMPLOYEES OR OTHERWISE, EXCEPT TO THE EXTENT THAT SUCH CLAIMS**

ARE PROXIMATELY CAUSED BY THE WILLFUL MISCONDUCT OR SOLE NEGLIGENCE OF BNSF.

13. Agency must require compliance with the obligations set forth in this Agreement, including Exhibit C and Exhibit C-1, and incorporate in each prime contract for construction of the Project, or the specifications therefor (i) the provisions set forth in Article III and IV; and (ii) the provisions set forth in Exhibit C, Exhibit C-I, and Exhibit F attached hereto and by reference made a part hereof.

14. Except as otherwise provided below in this Section 14, all construction work performed hereunder by Agency for the Project will be pursuant to a contract or contracts to be let by Agency, and all such contracts must include the following:

(a) All work performed under such contract or contracts within the limits of BNSF's right-of-way must be performed in a good and workmanlike manner in accordance with plans and specifications approved by BNSF;

(b) Changes or modifications during construction that affect safety or BNSF operations must be subject to BNSF's approval;

(c) No work will be commenced within BNSF's right-of-way until each of the prime contractors employed in connection with said work must have (i) executed and delivered to BNSF an agreement in the form of Exhibit C-I, and (ii) delivered to and secured BNSF's approval of the required insurance; and

(d) To facilitate scheduling for the Project, Agency shall have its contractor give BNSF's representative Project Engineer (909-386-4079) four (4) weeks advance notice of the proposed times and dates for work windows. BNSF and Agency's contractor will establish mutually agreeable work windows for the Project. BNSF has the right at any time to revise or change the work windows, due to train operations or service obligations. BNSF will not be responsible for any additional costs and expenses resulting from a change in work windows. Additional costs and expenses resulting from a change in work windows shall be accounted for in the contractor's expenses for the Project.

(e) The plans and specifications for the Project must be in compliance with the Bridge Requirements set forth on Exhibit F, attached to this Agreement and incorporated herein.

15. Agency must advise the appropriate BNSF Manager of Public Projects, in writing, of the completion date of the Project within thirty (30) days after such completion date. Additionally, Agency must notify BNSF's Manager of Public Projects, in writing, of the date

on which Agency and/or its Contractor will meet with BNSF for the purpose of making final inspection of the Project.

16. **TO THE FULLEST EXTENT PERMITTED BY LAW, AGENCY HEREBY RELEASES, INDEMNIFIES, DEFENDS AND HOLDS HARMLESS BNSF, ITS AFFILIATED COMPANIES, PARTNERS, SUCCESSORS, ASSIGNS, LEGAL REPRESENTATIVES, OFFICERS, DIRECTORS, SHAREHOLDERS, EMPLOYEES AND AGENTS FOR, FROM AND AGAINST ANY AND ALL CLAIMS, LIABILITIES, FINES, PENALTIES, COSTS, DAMAGES, LOSSES, LIENS, CAUSES OF ACTION, SUITS, DEMANDS, JUDGMENTS AND EXPENSES (INCLUDING, WITHOUT LIMITATION, COURT COSTS AND ATTORNEYS' FEES) OF ANY NATURE, KIND OR DESCRIPTION OF ANY PERSON (INCLUDING, WITHOUT LIMITATION, THE EMPLOYEES OF THE PARTIES HERETO) OR ENTITY DIRECTLY OR INDIRECTLY ARISING OUT OF, RESULTING FROM OR RELATED TO (IN WHOLE OR IN PART) (I) THE USE, OCCUPANCY OR PRESENCE OF AGENCY, ITS CONTRACTORS, SUBCONTRACTORS, EMPLOYEES OR AGENTS IN, ON, OR ABOUT THE CONSTRUCTION SITE, (II) THE PERFORMANCE, OR FAILURE TO PERFORM BY THE AGENCY, ITS CONTRACTORS, SUBCONTRACTORS, EMPLOYEES, OR AGENTS, ITS WORK OR ANY OBLIGATION UNDER THIS AGREEMENT, (III) THE SOLE OR CONTRIBUTING ACTS OR OMISSIONS OF AGENCY, ITS CONTRACTORS, SUBCONTRACTORS, EMPLOYEES, OR AGENTS IN, ON, OR ABOUT THE CONSTRUCTION SITE, (IV) AGENCY'S BREACH OF THE TEMPORARY CONSTRUCTION LICENSE OR EASEMENT GRANTED TO AGENCY PURSUANT TO ARTICLE II OF THIS AGREEMENT, (V) ANY RIGHTS OR INTERESTS GRANTED TO AGENCY PURSUANT TO THE TEMPORARY CONSTRUCTION LICENSE OR EASEMENT DISCUSSED IN ARTICLE II OF THIS AGREEMENT, (VI) AGENCY'S OCCUPATION AND USE OF BNSF'S PROPERTY OR RIGHT-OF-WAY, INCLUDING, WITHOUT LIMITATION, SUBSEQUENT MAINTENANCE OF THE STRUCTURE BY AGENCY, OR (VII) AN ACT OR OMISSION OF AGENCY OR ITS OFFICERS, AGENTS, INVITEES, EMPLOYEES OR CONTRACTORS OR ANYONE DIRECTLY OR INDIRECTLY EMPLOYED BY ANY OF THEM, OR ANYONE THEY CONTROL OR EXERCISE CONTROL OVER. THE LIABILITY ASSUMED BY AGENCY WILL NOT BE AFFECTED BY THE FACT, IF IT IS A FACT, THAT THE DAMAGE, DESTRUCTION, INJURY OR DEATH WAS OCCASIONED BY OR CONTRIBUTED TO BY THE NEGLIGENCE OF BNSF, ITS AGENTS, SERVANTS, EMPLOYEES OR OTHERWISE, EXCEPT TO THE EXTENT THAT SUCH CLAIMS ARE PROXIMATELY CAUSED BY THE WILLFUL MISCONDUCT OR SOLE NEGLIGENCE OF BNSF.**

17. Agency must give BNSF's Manager of Public Projects written notice to proceed ("**Notice to Proceed**") with the railroad work after receipt of necessary funds for the Project. BNSF will not begin the railroad work (including, without limitation, procurement of supplies, equipment or materials) until written notice to proceed is received from Agency.

ARTICLE IV) JOINT OBLIGATIONS

IN CONSIDERATION of the premises, the parties hereto mutually agree to the following:

1. All work contemplated in this Agreement must be performed in a good and workmanlike manner and each portion must be promptly commenced by the party obligated hereunder to perform the same and thereafter diligently prosecuted to conclusion in its logical order and sequence. Furthermore, any changes or modifications during construction which affect BNSF will be subject to BNSF's written approval prior to the commencement of any such changes or modifications from Greg Rousseau.

2. The work hereunder must be done in accordance with the Bridge Requirements set forth on Exhibit F and the detailed plans and specifications approved by BNSF.

3. Agency must require its contractor(s) to reasonably adhere to the Project's construction schedule for all Project work. The parties hereto mutually agree that BNSF's failure to complete the railroad work in accordance with the construction schedule due to inclement weather or unforeseen railroad emergencies will not constitute a breach of this Agreement by BNSF and will not subject BNSF to any liability. Regardless of the requirements of the construction schedule, BNSF reserves the right to reallocate the labor forces assigned to complete the railroad work in the event of an emergency to provide for the immediate restoration of railroad operations of either (BNSF or its related railroads) or to protect persons or property on or near any BNSF owned property. BNSF will not be liable for any additional costs or expenses resulting from any such reallocation of its labor forces. The parties mutually agree that any reallocation of labor forces by BNSF pursuant to this provision and any direct or indirect consequences or costs resulting from any such reallocation will not constitute a breach of this Agreement by BNSF.

4. BNSF will have the right to stop construction work on the Project if any of the following events take place: (i) Agency (or any of its contractors) performs the Project work in a manner contrary to the plans and specifications approved by BNSF; (ii) Agency (or any of its contractors), in BNSF's opinion, prosecutes the Project work in a manner that is hazardous to BNSF property, facilities or the safe and expeditious movement of railroad traffic; (iii) the insurance described in the attached Exhibit C-1 is canceled during the course of the Project; or (iv) Agency fails to pay BNSF for the Temporary Construction License or the Easement pursuant to Article II, Section 1 of this Agreement. The work stoppage will continue until all necessary actions are taken by Agency or its contractor to rectify the situation to the satisfaction of BNSF's Division Engineer or until proof of additional insurance has been delivered to and accepted by BNSF. In the event of a breach of (i) this Agreement, (ii) the Temporary Construction License, or (iii) the Easement, BNSF may immediately terminate the Temporary Construction License or the Easement. Any such work stoppage under this provision will not give rise to any liability on the part of BNSF. BNSF's right to stop the work is in addition to any other rights BNSF may have including, but not limited to, actions or suits for damages or lost profits. In the event that BNSF desires to stop construction work on the Project, BNSF agrees to immediately notify the following individual in writing:

Brian Gengler
14343 Civic Drive 5001
Victorville, CA 92393
Phone: 760-955-5156
Fax: 760-955-5159

5. Agency must supervise and inspect the operations of all Agency contractors to ensure compliance with the plans and specifications approved by BNSF, the terms of this Agreement and all safety requirements of BNSF. If BNSF determines that proper supervision and inspection are not being performed by Agency personnel at any time during construction of the Project, BNSF has the right to stop construction (within or adjacent to its operating right-of-way). Construction of the Project will not proceed until Agency corrects the situation to BNSF's reasonable satisfaction. If BNSF feels the situation is not being corrected in an expeditious manner, BNSF will immediately notify:

Brian Gengler
14343 Civic Drive 5001
Victorville, CA 92393
Phone: 760-955-5156
Fax: 760-955-5159

for appropriate corrective action.

6. Pursuant to this section and Article II, Section 6 herein, Agency must reimburse BNSF in full for the actual costs of all work performed by BNSF under this Agreement (including taxes, such as applicable sales and use taxes, business and occupation taxes, and similar taxes).

In any action brought under this Agreement, the prevailing Party shall be entitled to recover its actual costs and attorneys fees pursuant to California Civil Code Section 1717, as well as other litigation costs, including expert witness fees. The prevailing Party shall also be entitled to recover all actual attorneys fees and litigation costs incurred in connection with the enforcement of a judgment arising from such action or proceeding.

7. All expenses detailed in statements sent to Agency pursuant to Article II, Section 6 herein will comply with the terms and provisions of the Title 23 U.S. Code, Title 23 Code of Federal Regulations, and the Federal-Aid Policy Guide, U.S. Department of Transportation, as amended from time to time, which manual is hereby incorporated into and made a part of this Agreement by reference. The parties mutually agree that BNSF's preliminary engineering, design, and contract preparation costs described in Article II,

Section 2 herein are part of the costs of the Project even though such work may have preceded the date of this Agreement.

8. The parties mutually agree that neither construction activities for the Project, nor future maintenance of the Structure once completed, will be permitted during the fourth quarter of each calendar year. Emergency work will be permitted only upon prior notification to BNSF's Network Operations Center (telephone number: 800 832-5452). The parties hereto mutually understand and agree that trains cannot be subjected to delay during this time period.

9. Subject to the restrictions imposed by Article IV, Section 8 above, the construction of the Project will not commence until Agency gives BNSF's Manager of Public Projects thirty (30) days prior written notice of such commencement. The commencement notice will reference D.O.T. Crossing No. 026086L and must state the time that construction activities will begin.

10. In addition to the terms and conditions set forth elsewhere in this Agreement, including, but not limited to, the terms and conditions stated in Exhibit F, BNSF and Agency agree to the following terms upon completion of construction of the Project:

(a) Agency will own and maintain, at its sole cost and expense, the Structure, the highway approaches, and appurtenances thereto, lighting, drainage and any access roadways to BNSF gates installed pursuant to this Agreement. BNSF may, at its option, perform maintenance on the Structure in order to avoid conflicts with train operations. BNSF will notify Agency prior to performing any such maintenance on the Structure. In the event such maintenance involves emergency repairs, BNSF will notify Agency at its earliest opportunity. Agency must fully reimburse BNSF for the costs of maintenance performed by BNSF pursuant to this subsection (a).

(b) Agency must, at Agency's sole cost and expense, keep the Structure painted and free from graffiti.

(c) Agency must provide BNSF with any and all necessary permits and maintain roadway traffic controls, at no cost to BNSF, whenever requested by BNSF to allow BNSF to inspect the Structure or to make emergency repairs thereto.

(d) It is expressly understood by Agency and BNSF that any right to install utilities will be governed by a separate permit or license agreement between the parties hereto.

(e) Agency must keep the Structure and surrounding areas clean and free from birds, pigeons, scavengers, vermin, creatures and other animals.

(f) If Agency (including its contractors and agents) or BNSF, on behalf of Agency, performs (i) alterations or modifications to the Structure, or (ii) any maintenance or other work on the Structure with heavy tools, equipment or machinery at ground surface level horizontally within 25'-0" of the centerline of the nearest track, or (iii) any maintenance or other work outside the limits of the deck of the Structure vertically above the top of the rail, then Agency or its contractors and/or agents must procure and maintain the following insurance coverage, which may be changed from time to time:

Railroad Protective Liability insurance naming only ***BNSF*** as the Insured with coverage of at least $5,000,000 per occurrence and $10,000,000 in the aggregate. The policy shall be issued on a standard ISO form CG 00 35 12 04 and include the following:

- Endorsed to include the Pollution Exclusion Amendment
- Endorsed to include the Limited Seepage and Pollution Endorsement.
- Endorsed to remove any exclusion for punitive damages.
- Endorsed to include Evacuation Expense Coverage Endorsement.
- No other endorsements restricting coverage may be added.
- The original policy must be provided to ***BNSF*** prior to performing any work or services under this Agreement
- Definition of "Physical Damage to Property" shall be endorsed to read: "means direct and accidental loss of or damage to all property owned by any named insured and all property in any named insured' care, custody, and control arising out of the acts or omissions of the contractor named on the Declarations.

As used in this paragraph, "***BNSF***" means "Burlington Northern Santa Fe, LLC", "BNSF RAILWAY COMPANY" and the subsidiaries, successors, assigns and affiliates of each.

In lieu of providing a Railroad Protective Liability Policy, Agency may participate in BNSF's Blanket Railroad Protective Liability Insurance Policy if available to Agency or its contractors. The limits of coverage are the same as above.

11. Agency hereby grants to BNSF, at no cost or expense to BNSF, a permanent right of access from Agency property to BNSF tracks for maintenance purposes.

12. Agency must provide one set of as built plans (prepared in **English Units)** to BNSF, as well as one set of computer diskettes containing as built CAD drawings of the Structure and identifying the software used for the CAD drawings. The "as built plans" must comply with the Bridge Requirements set forth on Exhibit F and depict all information in BNSF engineering stationing and mile post pluses. The "as built plans" must also include plan and profile, structural bridge drawings and specifications, and drainage plans. All improvements and facilities must be shown.

13. Subject to the restrictions imposed by Article IV, Section 8 above and in accordance with the requirements of Article III, Section 9 above, Agency must notify and obtain prior authorization from BNSF's Manager of Public Projects before entering BNSF's right-of-way for **INSPECTION OR MAINTENANCE** purposes, and the BNSF Manager of Public Projects will determine if flagging is required. If the construction work hereunder is contracted, Agency must require its prime contractor(s) to comply with the obligations set forth in Exhibit C and Exhibit C-1, as the same may be revised from time to time. Agency will be responsible for its contractor(s) compliance with such obligations.

14. In the event that BNSF shall deem it necessary or desirable in the future, in the performance of its duty as a common carrier, to raise or lower the grade or change the alignment of its tracks or to lay additional track or tracks or to build other facilities in connection with the operation of its railroad, BNSF shall, at its expense, have full right to make such changes or additions, provided such changes or additions do not change or alter the Structure herein proposed to be constructed and provided further, however, that should it become necessary or desirable in the future to change, alter, widen or reconstruct the Structure to accommodate railroad projects, the cost of such work, including any cost incidental to alteration of railroad or highway facilities made necessary by the alteration of the Structure shall be the sole responsibility of Agency.

15. Agency may, at Agency's sole expense, alter or reconstruct the highway components of the Structure if necessary or desirable, due to traffic conditions or pedestrian or other recreational traffic, provided, however, that any such alteration or reconstruction must receive BNSF's prior written approval as evidenced by either a supplement to this Agreement, or execution of a new agreement that provides for the termination of this Agreement. Furthermore, any alteration or reconstruction of the highway components of the Structure will be covered by a Commission Order.

16. Any books, papers, records and accounts of the parties hereto relating to the work hereunder or the costs or expenses for labor and material connected with the construction will at all reasonable times be open to inspection and audit by the agents and authorized representatives of the parties hereto, as well as the State of CA and the Federal Highway Administration, for a period of one (1) year from the date of the final BNSF invoice under this Agreement.

17. The covenants and provisions of this Agreement are binding upon and inure to the benefit of the successors and assigns of the parties hereto. Notwithstanding the preceding sentence, neither party hereto may assign any of its rights or obligations hereunder without the prior written consent of the other party.

18. In the event construction of the Project does not commence within 3 years of the Effective Date, this Agreement will become null and void.

19. Neither termination nor expiration of this Agreement will release either party from any liability or obligation under this Agreement, whether of indemnity or otherwise,

resulting from any acts, omissions or events happening prior to the date of termination or expiration.

20. To the maximum extent possible, each provision of this Agreement will be interpreted in such a manner as to be effective and valid under applicable law. If any provision of this Agreement is prohibited by, or held to be invalid under, applicable law, such provision will be ineffective solely to the extent of such prohibition or invalidity and the remainder of the provision will be enforceable.

21. This Agreement (including exhibits and other documents, manuals, etc. incorporated herein) is the full and complete agreement between BNSF and Agency with respect to the subject matter herein and supersedes any and all other prior agreements between the parties hereto.

22. Any notice provided for herein or concerning this Agreement must be in writing and will be deemed sufficiently given when sent by certified mail, return receipt requested, to the parties at the following addresses:

BNSF:

Manager of Public Projects
740 Carnegie Drive
San Bernardino, CA 92408
Phone: 909-386-4474

Agency:

Brian Gengler
14343 Civic Drive 5001
Victorville, CA 92393
Phone: 760-955-5156
Fax: 760-955-5159

IN WITNESS WHEREOF, the parties hereto have caused this Agreement to be executed and attested by its duly qualified and authorized officials as of the day and year first above written.

BNSF RAILWAY COMPANY

By: Craig Rasmussen

Printed Name: CRAIG RASMUSSEN

Title: AVP ENGINEERING SVS + STRUCTURES

CITY OF VICTORVILLE

By: Gloria Garcia
Gloria Garcia, Mayor

Date: 11-15-17

ATTEST:

By: Carolee Bates
Carolee Bates, City Clerk

Date: 11-15-17

APPROVED AS TO CONTENT:

By: Brian W. Gengler
Brian W. Gengler, City Engineer

Date: 11-8-2017

APPROVED AS TO FORM:
Green de Bortnowsky, LLP

By: _____
Andre de Bortnowsky, City Attorney

Date: 11/8/17

APPROVED:

_____
Chuck Buquet, Risk Manager

VVCA/0050-43/DOC/003-3.DOC
9/22/16 1215 law

OVERPASS AGREEMENT

FOR

THE WIDENING OF THE BEAR VALLEY OVERHEAD

EXHIBIT A

DRAWING OF THE STRUCTURE

DIST	COUNTY	ROUTE	POST MILES TOTAL PROJECT	SHEET No	TOTAL SHEETS
08	SB	CR		56	82

REGISTERED CIVIL ENGINEER DATE

PLANS APPROVAL DATE

REGISTERED PROFESSIONAL ENGINEER T. OSTERKAMP No. C46783 Exp. 6/30/17 CIVIL STATE OF CALIFORNIA

The State of California or its officers or agents shall not be responsible for the accuracy or completeness of scanned copies of this plan sheet.

DOKKEN ENGINEERING
110 BLUE RAVINE ROAD, SUITE 200
FOLSOM, CA 95630

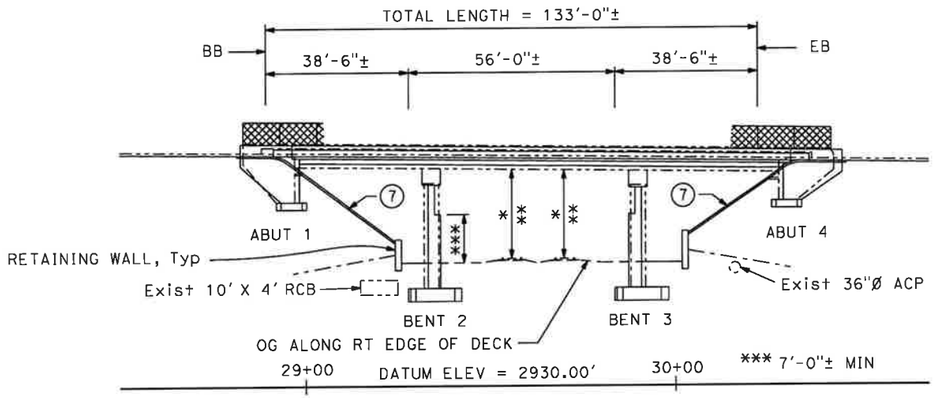

ELEVATION

1" = 20'

	WEST TRACK	EAST TRACK
* MIN VERT CLR TO WIDENING	24'-0"±	23'-5"±
** MIN VERT CLR TO EXISTING	22'-9¼"±	22'-3"±

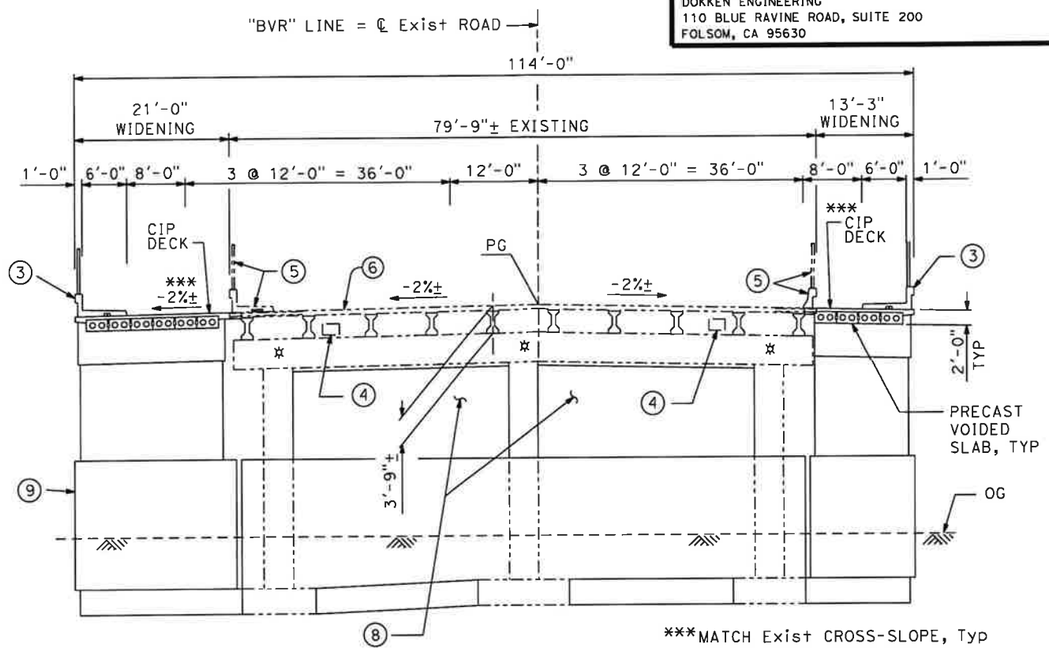

TYPICAL SECTION

1" = 10'

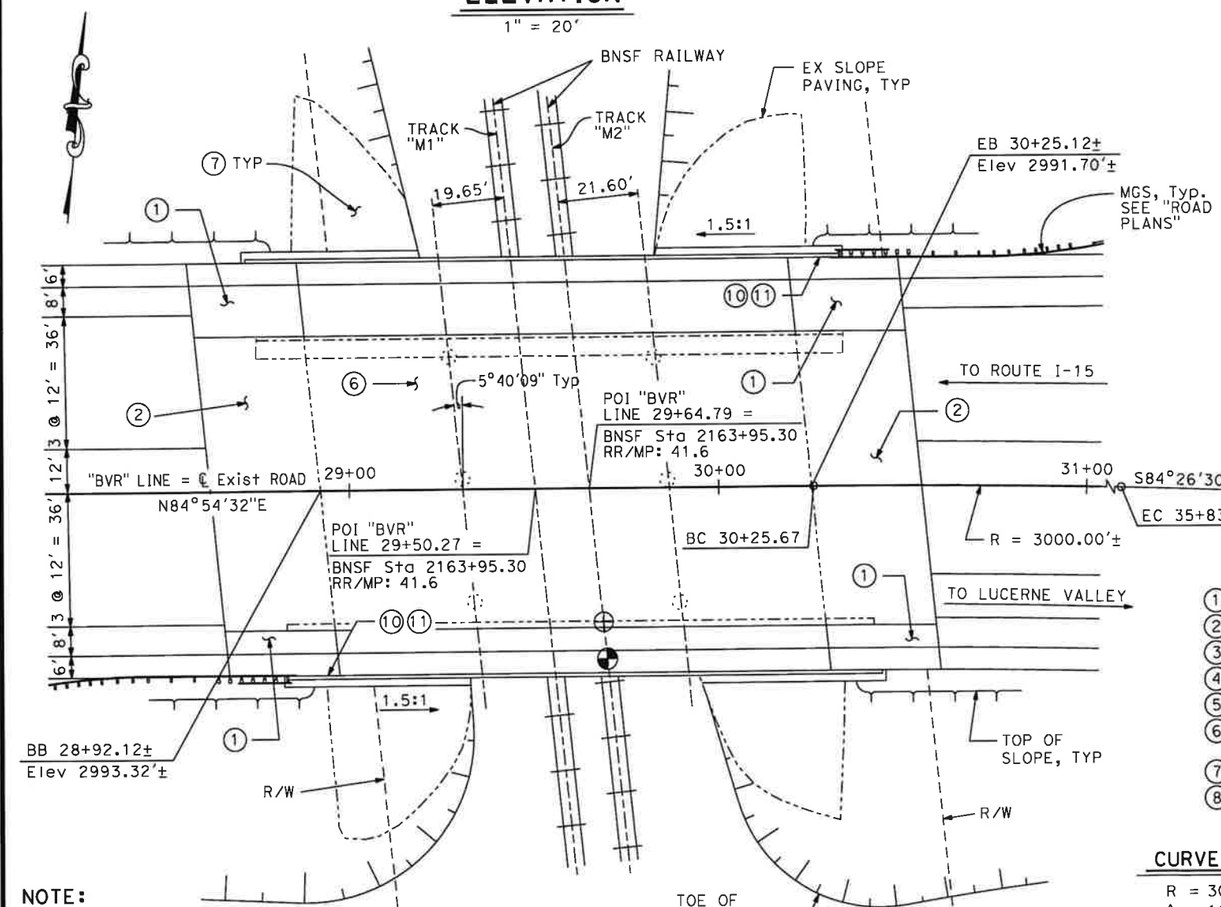

PLAN

1" = 20'

NOTE:

The contractor shall verify all controlling field dimensions before ordering or fabricating any material.

LEGEND:

1. STRUCTURE APPROACH TYPE N(30S)
2. STRUCTURE APPROACH TYPE R(30S)
3. CONCRETE BARRIER TYPE 732SW (MOD) W/ CHAIN LINK RAILING TYPE 7 (MOD)
4. 18" X 26" EX FUTURE UTILITY OPENING
5. REMOVE EX BARRIER, SIDEWALK AND RAILING
6. BRIDGE DECK METHACRYLATE RESIN TREATMENT, FOR LIMITS SEE "TYPICAL SECTION" SHEET
7. SLOPE PAVING, H=1.5 : V=1.0
8. INFILL WALLS
9. CRASH WALLS
10. PAINT "BEAR VALLEY ROAD OVERHEAD" & YEAR COMPLETED
11. PAINT "BRIDGE NO. 54C0547"

✲ RAILWAY TRACK LIGHTING FIXTURES (NEW)
◕ DENOTES POINT OF MIN VERT CLR TO WIDENING
⊕ DENOTES POINT OF MIN VERT CLR TO EXISTING
-------- DENOTES Exist STRUCTURE

CURVE DATA

R = 3000.00'
Δ = 10°38'58"
T = 279.61'
L = 557.60'

NOTES:

1. FOR "INDEX TO PLANS" AND "STANDARD PLANS", SEE "INDEX TO PLANS" SHEET.
2. FOR GENERAL NOTES, SEE "FOUNDATION PLAN" SHEET.

	BY	CHECKED
DESIGN	T. Osterkamp	M. Iley
DETAILS	R. Liptak	M. Iley
QUANTITIES	R. Liptak / F. Enriquez	M. Iley

LOAD & RESISTANCE FACTOR DESIGN — LIVE LOADING: HL93 W/"LOW-BOY"; PERMIT DESIGN VEHICLE
LAYOUT — BY — CHECKED
SPECIFICATIONS — BY — PLANS AND SPECS COMPARED

PREPARED FOR THE CITY OF VICTORVILLE

T. Osterkamp
PROJECT ENGINEER

BRIDGE NO. 54C0547
POST MILES

BEAR VALLEY ROAD OVERHEAD
GENERAL PLAN No. 1

DESIGN GENERAL PLAN SHEET (ENGLISH) (REV. 03/14/12)

ORIGINAL SCALE IN INCHES FOR REDUCED PLANS 0 1 2 3

UNIT:
PROJECT NUMBER & PHASE:
CONTRACT NO.:

DISREGARD PRINTS BEARING EARLIER REVISION DATES

REVISION DATES 1

SHEET 1 OF 27

FILE => J:\2007_Bear_Vly_BR_Widen\517\2007GP01.dgn

USERNAME => tmsToots DATE PLOTTED => 7/10/2017 TIME PLOTTED => 2:54:08 PM

OVERPASS AGREEMENT

FOR

THE WIDENING OF THE BEAR VALLEY OVERHEAD

EXHIBIT B

EASEMENT AGREEMENT

EASEMENT AGREEMENT

FOR _____

(Overpass Agreement)

THIS EASEMENT AGREEMENT FOR _____ ("**Easement Agreement**") is made and entered into as of the ____ day of _____ 20___ ("**Effective Date**"), by and between BNSF RAILWAY COMPANY, a Delaware corporation ("**Grantor**"), and _____, a _____ ("**Grantee**").

A. Grantor owns or controls certain real property situated at or near the vicinity of _____, County of _____, State of _____, at Mile Post _____, [Project # _____], as described or depicted on **Exhibit "A-1"** attached hereto and made a part hereof (the "**Premises**").

B. Grantor and Grantee have entered into that certain Overpass Agreement dated as of _____ concerning improvements on or near the Premises (the "**Overpass Agreement**").

C. Grantee has requested that Grantor grant to Grantee an easement over the Premises for the Easement Purpose (as defined below).

D. Grantor has agreed to grant Grantee such easement, subject to the terms and conditions set forth in this Easement Agreement.

NOW, THEREFORE, for and in consideration of the foregoing recitals which are incorporated herein, the mutual promises contained herein, and other good and valuable consideration, the receipt and sufficiency of which are hereby acknowledged, the parties agree as follows:

Section 1 Granting of Easement.

1.1 Easement Purpose. The "**Easement Purpose**" shall be for the purposes set forth in the OVERPASS Agreement. Any improvements to be constructed in connection with the Easement Purpose are referred to herein as "**Improvements**" and shall be constructed, located, configured and maintained by Grantee in strict accordance with the terms of this Easement Agreement and the OVERPASS Agreement.

1.2 Grant. Grantor does hereby grant unto Grantee a non-exclusive easement ("**Easement**") over the Premises for the Easement Purpose and for no other purpose. The Easement is granted subject to any and all

restrictions, covenants, easements, licenses, permits, leases and other encumbrances of whatsoever nature whether or not of record, if any, relating to the Premises and subject to all with all applicable federal, state and local laws, regulations, ordinances, restrictions, covenants and court or administrative decisions and orders, including Environmental Laws (defined below) and zoning laws (collectively, "**Laws**"). Grantor may not make any alterations or improvements or perform any maintenance or repair activities within the Premises except in accordance with the terms and conditions of the OVERPASS Agreement.

1.3 Reservations by Grantor. Grantor excepts and reserves the right, to be exercised by Grantor and any other parties who may obtain written permission or authority from Grantor:

(a) to install, construct, maintain, renew, repair, replace, use, operate, change, modify and relocate any existing pipe, power, communication, cable, or utility lines and appurtenances and other facilities or structures of like character (collectively, "**Lines**") upon, over, under or across the Premises;

(b) to install, construct, maintain, renew, repair, replace, use, operate, change, modify and relocate any tracks or additional facilities or structures upon, over, under or across the Premises; and

(c) to use the Premises in any manner as the Grantor in its sole discretion deems appropriate, provided Grantor uses all commercially reasonable efforts to avoid material interference with the use of the Premises by Grantee for the Easement Purpose.

Section 2 **Term of Easement**. The term of the Easement, unless sooner terminated under provisions of this Easement Agreement, shall be perpetual. [***If this is a temporary easement replace the preceding sentence with the following:*** The term of this Easement, unless sooner terminated under provisions of this Easement Agreement, shall expire on the date that is _____ after the Effective Date.]

Section 3 **No Warranty of Any Conditions of the Premises.** Grantee acknowledges that Grantor has made no representation whatsoever to Grantee concerning the state or condition of the Premises, or any personal property located thereon, or the nature or extent of Grantor's ownership interest in the Premises. Grantee has not relied on any statement or declaration of Grantor, oral or in writing, as an inducement to entering into this Easement Agreement, other than as set forth herein. GRANTOR HEREBY DISCLAIMS ANY REPRESENTATION OR WARRANTY, WHETHER EXPRESS OR IMPLIED, AS TO THE DESIGN OR CONDITION OF ANY PROPERTY PRESENT ON OR CONSTITUTING THE PREMISES, ITS MERCHANTABILITY OR FITNESS FOR ANY PARTICULAR PURPOSE, THE

QUALITY OF THE MATERIAL OR WORKMANSHIP OF ANY SUCH PROPERTY, OR THE CONFORMITY OF ANY SUCH PROPERTY TO ITS INTENDED USES. GRANTOR SHALL NOT BE RESPONSIBLE TO GRANTEE OR ANY OF GRANTEE'S CONTRACTORS FOR ANY DAMAGES RELATING TO THE DESIGN, CONDITION, QUALITY, SAFETY, MERCHANTABILITY OR FITNESS FOR ANY PARTICULAR PURPOSE OF ANY PROPERTY PRESENT ON OR CONSTITUTING THE PREMISES, OR THE CONFORMITY OF ANY SUCH PROPERTY TO ITS INTENDED USES. GRANTEE ACCEPTS ALL RIGHTS GRANTED UNDER THIS EASEMENT AGREEMENT IN THE PREMISES IN AN "AS IS, WHERE IS" AND "WITH ALL FAULTS" CONDITION, AND SUBJECT TO ALL LIMITATIONS ON GRANTOR'S RIGHTS, INTERESTS AND TITLE TO THE PREMISES. Grantee has inspected or will inspect the Premises, and enters upon Grantor's rail corridor and property with knowledge of its physical condition and the danger inherent in Grantor's rail operations on or near the Premises. Grantee acknowledges that this Easement Agreement does not contain any implied warranties that Grantee or Grantee's Contractors (as hereinafter defined) can successfully construct or operate the Improvements.

Section 4 **Nature of Grantor's Interest in the Premises.** GRANTOR DOES NOT WARRANT ITS TITLE TO THE PREMISES NOR UNDERTAKE TO DEFEND GRANTEE IN THE PEACEABLE POSSESSION OR USE THEREOF. NO COVENANT OF QUIET ENJOYMENT IS MADE. In case of the eviction of Grantee by anyone owning or claiming title to or any interest in the Premises, or by the abandonment by Grantor of the affected rail corridor, Grantor shall not be liable to refund Grantee any compensation paid hereunder.

Section 5 **Improvements.** Grantee shall take, in a timely manner, all actions necessary and proper to the lawful establishment, construction, operation, and maintenance of the Improvements, including such actions as may be necessary to obtain any required permits, approvals or authorizations from applicable governmental authorities. Any and all cuts and fills, excavations or embankments necessary in the construction, maintenance, or future alteration of the Improvements shall be made and maintained in such manner, form and extent as will provide adequate drainage of and from the adjoining lands and premises of the Grantor; and wherever any such fill or embankment shall or may obstruct the natural and pre-existing drainage from such lands and premises of the Grantor, the Grantee shall construct and maintain such culverts or drains as may be requisite to preserve such natural and pre-existing drainage, and shall also wherever necessary, construct extensions of existing drains, culverts or ditches through or along the premises of the Grantor, such extensions to be of adequate sectional dimensions to preserve the present flowage of drainage or other waters, and of materials and workmanship equally as good as those now existing. In the event any construction, repair, maintenance, work or other use of the Premises by Grantee will affect any Lines, fences, buildings, improvements or other facilities (collectively, "**Other Improvements**"), Grantee will be responsible at Grantee's sole risk to locate and make any adjustments necessary to such Other Improvements. Grantee must contact the owner(s) of the Other Improvements notifying them of any work that may damage these Other Improvements and/or interfere with their service and obtain

the owner's written approval prior to so affecting the Other Improvements. Grantee must mark all Other Improvements on the Plans and Specifications and mark such Other Improvements in the field in order to verify their locations. Grantee must also use all reasonable methods when working on or near Grantor property to determine if any Other Improvements (fiber optic, cable, communication or otherwise) may exist. The Grantee agrees to keep the above-described premises free and clear from combustible materials and to cut and remove or cause to be cut and removed at its sole expense all weeds and vegetation on said premises, said work of cutting and removal to be done at such times and with such frequency as to comply with Grantee and local laws and regulations and abate any and all hazard of fire.

Section 6 **Taxes and Recording Fees**. Grantee shall pay when due any taxes, assessments or other charges (collectively, "**Taxes**") levied or assessed upon the Improvements by any governmental or quasi-governmental body or any Taxes levied or assessed against Grantor or the Premises that are attributable to the Improvements. Grantee agrees to purchase, affix and cancel any and all documentary stamps in the amount prescribed by statute, and to pay any and all required transfer taxes, excise taxes and any and all fees incidental to recordation of the Memorandum of Easement. In the event of Grantee's failure to do so, if Grantor shall become obligated to do so, Grantee shall be liable for all costs, expenses and judgments to or against Grantor, including all of Grantor's legal fees and expenses.

Section 7 **Environmental.**

7.1 Compliance with Environmental Laws. Grantee shall strictly comply with all federal, state and local environmental Laws in its use of the Premises, including, but not limited to, the Resource Conservation and Recovery Act, as amended (RCRA), the Clean Water Act, the Oil Pollution Act, the Hazardous Materials Transportation Act, the Comprehensive Environmental Response, Compensation and Liability Act (CERCLA) and the Toxic Substances Control Act (collectively referred to as the "**Environmental Laws**"). Grantee shall not maintain a "treatment," "storage," "transfer" or "disposal" facility, or "underground storage tank," as those terms are defined by Environmental Laws, on the Premises. Grantee shall not handle, transport, release or suffer the release of "hazardous waste" or "hazardous substances", as "hazardous waste" and "hazardous substances" may now or in the future be defined by any Environmental Laws.

7.2 Notice of Release. Grantee shall give Grantor immediate notice to Grantor's Resource Operations Center at (800) 832-5452 of any release of hazardous substances on or from the Premises, violation of Environmental Laws, or inspection or inquiry by governmental authorities charged with enforcing Environmental Laws with respect to Grantee's use of the Premises. Grantee shall use its best efforts to promptly respond to any release on or from the Premises. Grantee also shall give Grantor immediate notice of all measures undertaken on behalf of Grantee to investigate, remediate, respond to or otherwise cure such release or violation.

7.3 Remediation of Release. In the event that Grantor has notice from Grantee or otherwise of a release or violation of Environmental Laws which occurred or may occur during the term of this Easement Agreement, Grantor may require Grantee, at Grantee's sole risk and expense, to take timely measures to investigate, remediate, respond to or otherwise cure such release or violation affecting the Premises. If during the construction or subsequent maintenance of the Improvements, soils or other materials considered to be environmentally contaminated are exposed, Grantee will remove and safely dispose of said contaminated soils. Determination of soils contamination and applicable disposal procedures thereof, will be made only by an agency having the capacity and authority to make such a determination.

7.4 Preventative Measures. Grantee shall promptly report to Grantor in writing any conditions or activities upon the Premises known to Grantee which create a risk of harm to persons, property or the environment and shall take whatever action is necessary to prevent injury to persons or property arising out of such conditions or activities; provided, however, that Grantee's reporting to Grantor shall not relieve Grantee of any obligation whatsoever imposed on it by this Easement Agreement. Grantee shall promptly respond to Grantor's request for information regarding said conditions or activities.

7.5 Evidence of Compliance. Grantee agrees periodically to furnish Grantor with proof satisfactory to Grantor that Grantee is in compliance with this **Section 7**. Should Grantee not comply fully with the above-stated obligations of this **Section 7**, notwithstanding anything contained in any other provision hereof, Grantor may, at its option, terminate this Easement Agreement by serving five (5) days' notice of termination upon Grantee. Upon termination, Grantee shall remove the Improvements and restore the Premises as provided in **Section 9**.

Section 8 Default and Termination.

8.1 Grantor's Performance Rights. If at any time Grantee, or Grantee's Contractors, fails to properly perform its obligations under this Easement Agreement, Grantor, in its sole discretion, may: (i) seek specific performance of the unperformed obligations, or (ii) at Grantee's sole cost, may arrange for the performance of such work as Grantor deems necessary for the safety of its rail operations, activities and property, or to avoid or remove any interference with the activities or property of Grantor, or anyone or anything present on the rail corridor or property with the authority or permission of Grantor. Grantee shall promptly reimburse Grantor for all costs of work performed on Grantee's behalf upon receipt of an invoice for such costs. Grantor's failure to perform any obligations of Grantee or Grantee's Contractors shall not alter the liability allocation set forth in this Easement Agreement.

8.2 Abandonment. Grantor may, at its option, terminate this Easement Agreement by serving five (5) days' notice in writing upon Grantee if Grantee should abandon or cease to use the Premises for the Easement Purpose. Any waiver by Grantor of any default or defaults shall not constitute a waiver of the right to terminate

this Easement Agreement for any subsequent default or defaults, nor shall any such waiver in any way affect Grantor's ability to enforce any section of this Easement Agreement.

8.3 Effect of Termination or Expiration. Neither termination nor expiration will release Grantee from any liability or obligation under this Easement, whether of indemnity or otherwise, resulting from any acts, omissions or events happening prior to the date of termination or expiration, or, if later, the date the Premises are restored as required by **Section 9**.

8.4 Non-exclusive Remedies. The remedies set forth in this **Section 8** shall be in addition to, and not in limitation of, any other remedies that Grantor may have under the OVERPASS Agreement, at law or in equity.

Section 9 Surrender of Premises.

9.1 Removal of Improvements and Restoration. Upon termination of this Easement Agreement, whether by abandonment of the Easement or by the exercise of Grantor's termination rights hereunder, Grantee shall, at its sole cost and expense, immediately perform **the following:**

(a) remove all or such portion of Grantee's Improvements and all appurtenances thereto from the Premises, as Grantor directs at Grantor's sole discretion;

(b) repair and restore any damage to the Premises arising from, growing out of, or connected with Grantee's use of the Premises;

(c) remedy any unsafe conditions on the Premises created or aggravated by Grantee; and

(d) leave the Premises in the condition which existed as of the Effective Date.

9.2 Limited License for Entry. If this Easement Agreement is terminated, Grantor may direct Grantee to undertake one or more of the actions set forth above, at Grantee's sole cost, in which case Grantee shall have a limited license to enter upon the Premises to the extent necessary to undertake the actions directed by Grantor. The terms of this limited license include all of Grantee's obligations under this Easement Agreement. Termination will not release Grantee from any liability or obligation under this Easement Agreement, whether of indemnity or otherwise, resulting from any acts, omissions or events happening prior to the date of termination, or, if later, the date when Grantee's Improvements are removed and the Premises are restored to the condition that existed as of the Effective Date. If Grantee fails to surrender the Premises to Grantor upon any termination of the Easement, all liabilities and obligations of Grantee

hereunder shall continue in effect until the Premises are surrendered.

Section 10 **Liens**. Grantee shall promptly pay and discharge any and all liens arising out of any construction, alterations or repairs done, suffered or permitted to be done by Grantee on the Premises or attributable to Taxes that are the responsibility of Grantee pursuant to **Section 6**. Grantor is hereby authorized to post any notices or take any other action upon or with respect to the Premises that is or may be permitted by Law to prevent the attachment of any such liens to any portion of the Premises; provided, however, that failure of Grantor to take any such action shall not relieve Grantee of any obligation or liability under this **Section 10** or any other section of this Easement Agreement.

Section 11 **Tax Exchange**. Grantor may assign its rights (but not its obligations) under this Easement Agreement to Goldfinch Exchange Company LLC, an exchange intermediary, in order for Grantor to effect an exchange under Section 1031 of the Internal Revenue Code. In such event, Grantor shall provide Grantee with a Notice of Assignment, attached as Exhibit C, and Grantee shall execute an acknowledgement of receipt of such notice.

Section 12 **Notices**. Any notice required or permitted to be given hereunder by one party to the other shall be delivered in the manner set forth in the OVERPASS Agreement. Notices to Grantor under this Easement shall be delivered to the following address: BNSF Railway Company, Real Estate Department, 2500 Lou Menk Drive, Ft. Worth, TX 76131, Attn: Permits, or such other address as Grantor may from time to time direct by notice to Grantee.

Section 13 **Recordation**. It is understood and agreed that this Easement Agreement shall not be in recordable form and shall not be placed on public record and any such recording shall be a breach of this Easement Agreement. Grantor and Grantee shall execute a Memorandum of Easement in the form attached hereto as **Exhibit "B-1"** (the "**Memorandum of Easement**") subject to changes required, if any, to conform such form to local recording requirements. [*IF LEGAL DESCRIPTION IS NOT AVAILABLE USE THE FOLLOWING IN PLACE OF THE PRIOR SENTENCE: As of the Effective Date, a legal description of the Premises is not available. Grantee and Grantor shall work together in good faith to establish the legal description for the Premises. Once Grantor and Grantee have approved the legal description, Grantor and Grantee shall execute a Memorandum of Easement in the form attached hereto as* ***Exhibit "B-1"*** *(the "**Memorandum of Easement**").]* The Memorandum of Easement shall be recorded in the real estate records in the county where the Premises are located. If a Memorandum of Easement is not executed by the parties and recorded as described above within ____ days of the Effective Date, Grantor shall have the right to terminate this Easement Agreement upon notice to Grantee.

Section 14 **Miscellaneous**.

14.1 All questions concerning the interpretation or application of provisions of

this Easement Agreement shall be decided according to the substantive Laws of the State of **[Texas]** without regard to conflicts of law provisions.

14.2 In the event that Grantee consists of two or more parties, all the covenants and agreements of Grantee herein contained shall be the joint and several covenants and agreements of such parties. This instrument and all of the terms, covenants and provisions hereof shall inure to the benefit of and be binding upon each of the parties hereto and their respective legal representatives, successors and assigns and shall run with and be binding upon the Premises.

14.3 If any action at law or in equity is necessary to enforce or interpret the terms of this Easement Agreement, the prevailing party or parties shall be entitled to reasonable attorneys' fees, costs and necessary disbursements in addition to any other relief to which such party or parties may be entitled.

14.4 If any provision of this Easement Agreement is held to be illegal, invalid or unenforceable under present or future Laws, such provision will be fully severable and this Easement Agreement will be construed and enforced as if such illegal, invalid or unenforceable provision is not a part hereof, and the remaining provisions hereof will remain in full force and effect. In lieu of any illegal, invalid or unenforceable provision herein, there will be added automatically as a part of this Easement Agreement a provision as similar in its terms to such illegal, invalid or unenforceable provision as may be possible and be legal, valid and enforceable.

14.5 This Easement Agreement is the full and complete agreement between Grantor and Grantee with respect to all matters relating to Grantee's use of the Premises, and supersedes any and all other agreements between the parties hereto relating to Grantee's use of the Premises as described herein. However, nothing herein is intended to terminate any surviving obligation of Grantee or Grantee's obligation to defend and hold Grantor harmless in any prior written agreement between the parties.

14.6 Time is of the essence for the performance of this Easement Agreement.

Section 15 Administrative Fee.

15.1 Grantee acknowledges that a material consideration for this agreement, without which it would not be made, is the agreement between Grantee and Grantor, that the Grantee shall pay upon return of this Agreement signed by Grantee to Grantor's Broker a processing fee in the amount of **$2,000.00** over and above the agreed upon Acquisition Price. Said fee shall be made payable to BNSF Railway Company by a separate check.

[Signature page follows]

Witness the execution of this Easement Agreement as of the date first set forth above.

GRANTOR:

BNSF RAILWAY COMPANY, a Delaware corporation

By: _____
Name: _____
Title: _____

GRANTEE:

_____
__,
a
_____
_

By: _____
Name: _____
Title: _____

EXHIBIT "A-1"

Premises

MEMORANDUM OF EASEMENT

THIS MEMORANDUM OF EASEMENT is hereby executed this 29th day of March, 2018, by and between **BNSF RAILWAY COMPANY**, a Delaware corporation ("**Grantor**"), whose address for purposes of this instrument is 2500 Lou Menk Drive, Fort Worth, Texas 76131, and the **CITY OF VICTORVILLE**, a political subdivision of the State of California ("**Grantee**"), whose address for purposes of this instrument is 14343 Civic Dr. 5001, Victorville, CA 92393, which terms "Grantor" and "Grantee" shall include, wherever the context permits or requires, singular or plural, and the heirs, legal representatives, successors and assigns of the respective parties:

WITNESSETH:

WHEREAS, Grantor owns or controls certain real property situated in San Bernardino County, California, as described on **Exhibit "B" (Footing Easement) and Exhibit "F" (Slope Easement)** attached hereto and incorporated herein by reference (the "**Premises**');

WHEREAS, Grantor and Grantee entered into an Easement Agreement, dated 29th day of March, 2018 (the "**Easement Agreement**") which set forth, among other things, the terms of an easement granted by Grantor to Grantee over and across the Premises (the "**Easement**"); and

WHEREAS, Grantor and Grantee desire to memorialize the terms and conditions of the Easement Agreement of record.

For valuable consideration the receipt and sufficiency of which are hereby acknowledged, Grantor does grant unto Grantee and Grantee does hereby accept from Grantor the Easement over and across the Premises.

The term of the Easement, unless sooner terminated under provisions of the Easement Agreement, shall be perpetual.

All the terms, conditions, provisions and covenants of the Easement Agreement are incorporated herein by this reference for all purposes as though written out at length herein, and both the Easement Agreement and this Memorandum of Easement shall be deemed to constitute a single instrument or document. This Memorandum of Easement is not intended to amend, modify, supplement, or supersede any of the provisions of the Easement Agreement and, to the extent there may be any conflict or inconsistency between the Easement Agreement or this Memorandum of Easement, the Easement Agreement shall control.

IN WITNESS WHEREOF, Grantor and Grantee have executed this Memorandum of Easement to as of the date and year first above written.

GRANTOR:

BNSF RAILWAY COMPANY, a Delaware corporation

By: _____
Name: Mark D. Ude
Title: AVP Corporate Real Estate Development

STATE OF TEXAS §
§
COUNTY OF TARRANT §

This instrument was acknowledged before me on the 29th day of March, 2018, by Mark D. Ude as AVP Corporate Real Estate Development of **BNSF RAILWAY COMPANY**, a Delaware corporation.

_____
Notary Public

My appointment expires: Feb 17, 2019

(Seal)

NOTARY PUBLIC STATE OF TEXAS
CATHY T BENTON
Notary ID # 5532257
My Commission Expires
February 17, 2019

GRANTEE:
CITY OF VICTORVILLE

By: Gloria Garcia
Name: Gloria Garcia
Title: Mayor

STATE OF _____ §
§
COUNTY OF _____ §

This instrument was acknowledged before me on the _____ day of _____, 201_, by _____ (name) as _____(title) of _____, a _____.

See Attached Acknowledgment

_____
Notary Public

My appointment expires:_____

(Seal)

ACKNOWLEDGMENT

A notary public or other officer completing this certificate verifies only the identity of the individual who signed the document to which this certificate is attached, and not the truthfulness, accuracy, or validity of that document.

State of California
County of San Bernardino)

On 2/13/18 before me, Heidi Roche, Notary Public
(insert name and title of the officer)

personally appeared Gloria Garcia,
who proved to me on the basis of satisfactory evidence to be the person(s) whose name(s) is/are subscribed to the within instrument and acknowledged to me that he/she/they executed the same in his/her/their authorized capacity(ies), and that by his/her/their signature(s) on the instrument the person(s), or the entity upon behalf of which the person(s) acted, executed the instrument.

I certify under PENALTY OF PERJURY under the laws of the State of California that the foregoing paragraph is true and correct.

WITNESS my hand and official seal.

Heidi Roche
COMM. #2164650
NOTARY PUBLIC - CALIFORNIA
SAN BERNARDINO COUNTY
My Comm. Expires Oct. 11, 2020

Signature Heidi Roche (Seal)

EXHIBIT "B"

CITY OF VICTORVILLE
Footing Easement

Legal Description:

All that real property located within the southeast one quarter of Section 34, Township 5 North, Range 4 West San Bernardino Meridian, in the County of San Bernardino, State of California, more particularly described by metes and bounds as follows;

Parcel 1

Commencing at the southeast corner of that tract of land conveyed to the County of San Bernardino as PARCEL NO. 1 of GRANT DEED recorded April 26, 1978 in Book 9419 at Page 1275, Official Records of said County, said point also being the intersection of the south line of said Section 34 with the west line of the Atchison, Topeka and Santa Fe Railway right of way as described in document recorded November 3, 1903, in Book 339 of Deeds, page 168, Records of said County; Thence N11°11'10"W 39.95' along said west line; Thence departing from said west line N78°48'50"E 118.11' to the TRUE POINT OF BEGINNING;

Thence from said TRUE POINT OF BEGINNING N10°45'37"W 118.58';
Thence N79°14'23"E 10.00';
Thence S10°45'37"E 118.58';
Thence S79°14'23"W 10.00' to the TRUE POINT OF BEGINNING.

Containing 1,186 square feet more or less.

All as shown on EXHIBIT "B" attached hereto and by this reference made a part hereof.

Prepared by me or under my direction.

TERRY FLETCHER LS 5834
My Registration Expires 09-30-2018

2/8/2017
DATE

LICENSED LAND SURVEYOR
TERRY FLETCHER
No. 5834
Exp. 9-30-18
STATE OF CALIFORNIA

EXHIBIT "B"

Footing Easement

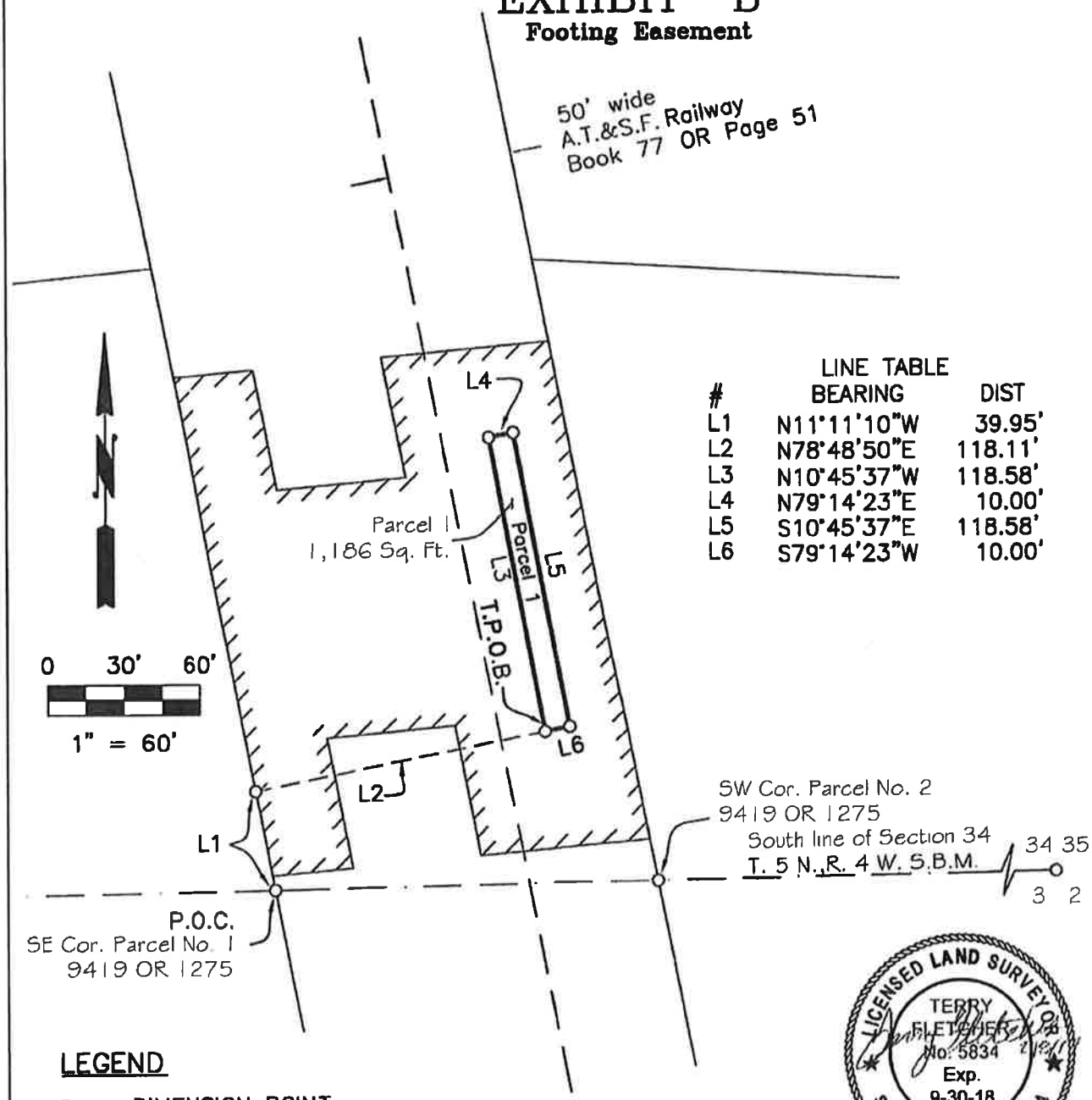

LINE TABLE

#	BEARING	DIST
L1	N11°11'10"W	39.95'
L2	N78°48'50"E	118.11'
L3	N10°45'37"W	118.58'
L4	N79°14'23"E	10.00'
L5	S10°45'37"E	118.58'
L6	S79°14'23"W	10.00'

LICENSED LAND SURVEYOR
TERRY FLETCHER
No. 5834
Exp. 9-30-18
STATE OF CALIFORNIA

LEGEND

o DIMENSION POINT
P.O.C. POINT OF COMMENCING
T.P.O.B. TRUE POINT OF BEGINNING

EXISTING AGREEMENT BETWEEN A.T.S.F RAILWAY COMPANY AND THE COUNTY OF SAN BERNARDINO AS SHOWN ON EXHIBIT 'A', SAN BERNARDINO COUNTY RESOLUTION NO. R-76-24, DATED FEBRUARY 9, 1976

DOKKEN ENGINEERING 110 BLUE RAVINE ROAD, SUITE 200 FOLSOM, CA 95630 (916)858-0642	BEAR VALLEY ROAD CITY OF VICTORVILLE COUNTY OF SAN BERNARDINO STATE OF CALIFORNIA	DATE: 11/7/16 APN: ---- DE NO. 1
	CHECKED BY: / PREPARED BY: TF	SHEET 1 OF 1
Atchison Topeka and Santa Fe Railway Co.		

J:\2007_Bear_Vly_BR_Widen\400\460_RofW_Engr\TFRW\2007.dwg

EXHIBIT "F"

CITY OF VICTORVILLE
Slope Easements

Legal Description:

All that real property located within the southeast one quarter of Section 34, Township 5 North, Range 4 West and the northeast one-quarter of Section 3, Township 4 North, Range 4 West San Bernardino Meridian, in the County of San Bernardino, State of California, more particularly described by metes and bounds as follows;

Parcel 1

Beginning at the southwest corner of that tract of land conveyed to the County of San Bernardino as PARCEL NO. 2 of GRANT DEED recorded April 26, 1978 in Book 9419 at Page 1275, Official Records of said County, said point also being the intersection of the south line of said Section 34 with the east line of the Atchison, Topeka and Santa Fe Railway right of way as described in Book 77 Official Records Page 51, Records of said County and being the TRUE POINT OF BEGINNING;

Thence from said TRUE POINT OF BEGINNING S11°11'10"E 13.48' along said east line;

Thence departing from said east line S84°54'32"W 50.28' to a point on the west line of said right of way;

Thence N11°11'10"W 30.17' along said west line;

Thence N84°54'32"E 50.28' to a point on the east line of the Atchison, Topeka and Santa Fe Railway right of way;

Thence S11°11'10"E 16.69' along said east line to the TRUE POINT OF BEGINNING.

Containing 1,508 square feet more or less.

All as shown on EXHIBIT "F" attached hereto and by this reference made a part hereof.

Parcel 2

Commencing at the southwest corner of that tract of land conveyed to the County of San Bernardino as PARCEL NO. 2 of GRANT DEED recorded April 26, 1978 in Book 9419 at Page 1275, Official Records of said County, said point also being the intersection of the south line of said Section 34 with the east line of the Atchison, Topeka and Santa Fe Railway right of way as described in Book 77 Official Records Page 51, Records of said County; Thence N11°11'10"W 217.82' along said east line to the TRUE POINT OF BEGINNING;

Thence from said TRUE POINT OF BEGINNING along said east line N11°11'10"W 56.32';

Thence departing from said east line S84°54'32"W 50.28' to a point on west line of said right of way;

Thence S11°11'10"E 56.32' along said west line;

Thence N84°54'32"E 50.28' to the TRUE POINT OF BEGINNING.

Containing 2,816 square feet more or less.

All as shown on EXHIBIT "F" attached hereto and by this reference made a part hereof.

Prepared by me or under my direction.

Terry Fletcher

TERRY FLETCHER LS 5834
My Registration Expires 09-30-2018

3/22/2018
DATE

LICENSED LAND SURVEYOR
TERRY FLETCHER
No. 5834
Exp. 9-30-18
STATE OF CALIFORNIA

EXHIBIT "F"

Slope Easements

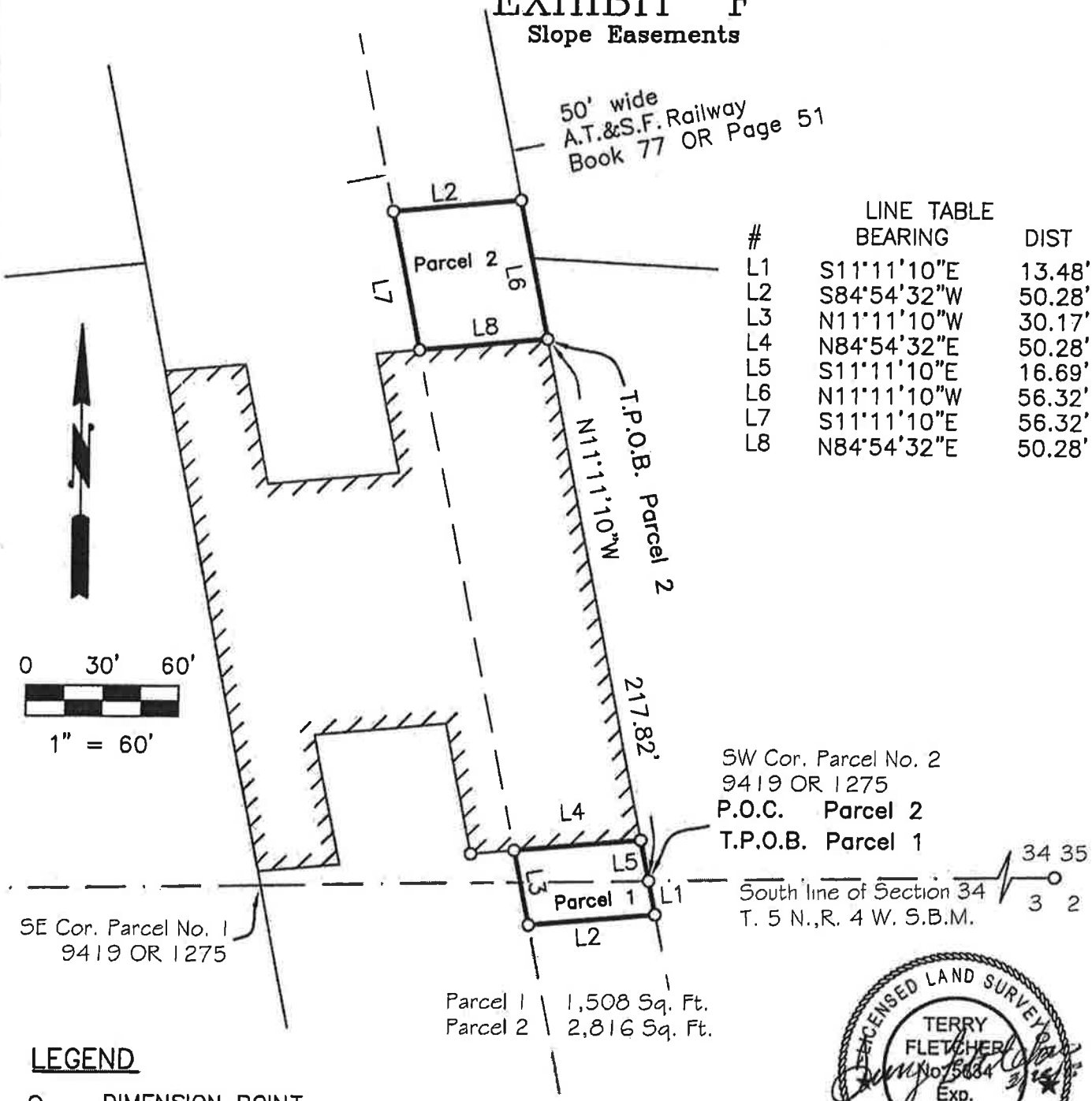

LINE TABLE

#	BEARING	DIST
L1	S11°11'10"E	13.48'
L2	S84°54'32"W	50.28'
L3	N11°11'10"W	30.17'
L4	N84°54'32"E	50.28'
L5	S11°11'10"E	16.69'
L6	N11°11'10"W	56.32'
L7	S11°11'10"E	56.32'
L8	N84°54'32"E	50.28'

LICENSED LAND SURVEYOR
TERRY FLETCHER
No. 7664
Exp. 9-30-18
STATE OF CALIFORNIA

LEGEND

o DIMENSION POINT
P.O.C. POINT OF COMMENCING
T.P.O.B. TRUE POINT OF BEGINNING

EXISTING AGREEMENT BETWEEN A.T.S.F RAILWAY COMPANY AND THE COUNTY OF SAN BERNARDINO AS SHOWN ON EXHIBIT 'A', SAN BERNARDINO COUNTY RESOLUTION NO. R-76-24, DATED FEBRUARY 9, 1976

DOKKEN ENGINEERING 110 BLUE RAVINE ROAD, SUITE 200 FOLSOM, CA 95630 (916)858-0642	**BEAR VALLEY ROAD** CITY OF VICTORVILLE COUNTY OF SAN BERNARDINO STATE OF CALIFORNIA	DATE: 3/22/18 APN: ---- DE NO. 1
	CHECKED BY: PREPARED BY: TF	SHEET 1 OF 1
Atchison Topeka and Santa Fe Railway Co.		

J:\2007_Bear_Vly_BR_Widen\400\460_RofW_Engr\TFRW\2007.dwg

OVERPASS AGREEMENT

FOR

THE WIDENING OF THE BEAR VALLEY OVERHEAD

EXHIBIT C/C1

CONTRACTOR REQUIREMENTS
AND
AGREEMENT BETWEEN BNSF RAILWAY AND THE CONTRACTOR

EXHIBIT "C"

CONTRACTOR REQUIREMENTS

1.01 General:

- **1.01.01** The Contractor must cooperate with **BNSF RAILWAY COMPANY**, hereinafter referred to as "**Railway**" where work is over or under on or adjacent to Railway property and/or right-of-way, hereafter referred to as "Railway Property", during the construction of the Bear Valley Cutoff Overpass widening.

- **1.01.02** The Contractor must execute and deliver to the Railway duplicate copies of the Exhibit "C-1" Agreement, in the form attached hereto, obligating the Contractor to provide and maintain in full force and effect the insurance called for under Section 3 of said Exhibit "C-1". Questions regarding procurement of the Railroad Protective Liability Insurance should be directed to Rosa Martinez at Marsh, USA, 214-303-8519.

- **1.01.03** The Contractor must plan, schedule and conduct all work activities so as not to interfere with the movement of any trains on Railway Property.

- **1.01.04** The Contractor's right to enter Railway's Property is subject to the absolute right of Railway to cause the Contractor's work on Railway's Property to cease if, in the opinion of Railway, Contractor's activities create a hazard to Railway's Property, employees, and/or operations. Railway will have the right to stop construction work on the Project if any of the following events take place: (i) Contractor (or any of its subcontractors) performs the Project work in a manner contrary to the plans and specifications approved by Railway; (ii) Contractor (or any of its subcontractors), in Railway's opinion, prosecutes the Project work in a manner which is hazardous to Railway property, facilities or the safe and expeditious movement of railroad traffic; (iii) the insurance described in the attached Exhibit C-1 is canceled during the course of the Project; or (iv) Contractor fails to pay Railway for the Temporary Construction License or the Easement. The work stoppage will continue until all necessary actions are taken by Contractor or its subcontractor to rectify the situation to the satisfaction of Railway's Division Engineer or until additional insurance has been delivered to and accepted by Railway. In the event of a breach of (i) this Agreement, (ii) the Temporary Construction License, or (iii) the Easement, Railway may immediately terminate the Temporary Construction License or the Easement. Any such work stoppage under this provision will not give rise to any liability on the part of Railway. Railway's right to stop the work is in addition to any other rights Railway may have including, but not limited to, actions or suits for

damages or lost profits. In the event that Railway desires to stop construction work on the Project, Railway agrees to immediately notify the following individual in writing:

Brian Gengler
14343 Civic Drive 5001
Victorville, CA 92393
Phone: 760-955-5156
Fax: 760-955-5159

- **1.01.05** The Contractor is responsible for determining and complying with all Federal, State and Local Governmental laws and regulations, including, but not limited to environmental laws and regulations (including but not limited to the Resource Conservation and Recovery Act, as amended; the Clean Water Act, the Oil Pollution Act, the Hazardous Materials Transportation Act, CERCLA), and health and safety laws and regulations. The Contractor hereby indemnifies, defends and holds harmless Railway for, from and against all fines or penalties imposed or assessed by Federal, State and Local Governmental Agencies against the Railway which arise out of Contractor's work under this Agreement.

- **1.01.06** The Contractor must notify The City of Victorville and Railway's Manager Public Projects, telephone number (909) 386-4474 at least thirty (30) calendar days before commencing any work on Railway Property. Contractor's notification to Railway must refer to Railway's file BF-10010127.

- **1.01.07** For any bridge demolition and/or falsework above any tracks or any excavations located with any part of the excavations located within, whichever is greater, twenty-five (25) feet of the nearest track or intersecting a slope from the plane of the top of rail on a 2 horizontal to 1 vertical slope beginning at eleven (11) feet from centerline of the nearest track, both measured perpendicular to center line of track, the Contractor must furnish the Railway five sets of working drawings showing details of construction affecting Railway Property and tracks. The working drawing must include the proposed method of installation and removal of falsework, shoring or cribbing, not included in the contract plans and two sets of structural calculations of any falsework, shoring or cribbing. For all excavation and shoring submittal plans, the current "BNSF-UPRR Guidelines for Temporary Shoring" must be used for determining the design loading conditions to be used in shoring design, and all calculations and submittals must be in accordance with the current "BNSF-UPRR Guidelines for Temporary Shoring". All submittal drawings and calculations must be stamped by a registered professional engineer licensed to practice in the state the project is located. All calculations must take into consideration railway surcharge loading and must be designed to meet American Railway Engineering and Maintenance-of-Way Association (previously known as American Railway

Engineering Association) Coopers E-80 live loading standard. All drawings and calculations must be stamped by a registered professional engineer licensed to practice in the state the project is located. The Contractor must not begin work until notified by the Railway that plans have been approved. The Contractor will be required to use lifting devices such as, cranes and/or winches to place or to remove any falsework over Railway's tracks. In no case will the Contractor be relieved of responsibility for results obtained by the implementation of said approved plans.

- **1.01.08** Subject to the movement of Railway's trains, Railway will cooperate with the Contractor such that the work may be handled and performed in an efficient manner. The Contractor will have no claim whatsoever for any type of damages or for extra or additional compensation in the event his work is delayed by the Railway.

1.02 Contractor Safety Orientation

- **1.02.01 No employee of the Contractor, its subcontractors, agents or invitees may enter Railway Property without first having completed Railway's Engineering Contractor Safety Orientation, found on the web site www.BNSFContractor.com. The Contractor must ensure that each of its employees, subcontractors, agents or invitees completes Railway's Engineering Contractor Safety Orientation through internet sessions before any work is performed on the Project. Additionally, the Contractor must ensure that each and every one of its employees, subcontractors, agents or invitees possesses a card certifying completion of the Railway Contractor Safety Orientation before entering Railway Property. The Contractor is responsible for the cost of the Railway Contractor Safety Orientation. The Contractor must renew the Railway Contractor Safety Orientation annually. Further clarification can be found on the web site or from the Railway's Representative.**

1.03 Railway Requirements

- **1.03.01** The Contractor must take protective measures as are necessary to keep railway facilities, including track ballast, free of sand, debris, and other foreign objects and materials resulting from his operations. Any damage to railway facilities resulting from Contractor's operations will be repaired or replaced by Railway and the cost of such repairs or replacement must be paid for by the Agency.

- **1.03.02** The Contractor must notify the Railway's Division Engineer at (909) 386-4509 and provide blasting plans to the Railway for review seven (7) calendar days prior to conducting any blasting operations adjacent to or on Railway's Property.

- **1.03.03** The Contractor must abide by the following temporary clearances during construction:

  - 15'-0" Horizontally from centerline of nearest track
  - 21'-6" Vertically above top of rail
  - 27'-0" Vertically above top of rail for electric wires carrying less than 750 volts
  - 28'-0" Vertically above top of rail for electric wires carrying 750 volts to 15,000 volts
  - 30'-0" Vertically above top of rail for electric wires carrying 15,000 volts to 20,000 volts
  - 34'-0" Vertically above top of rail for electric wires carrying more than 20,000 volts

- **1.03.04** Upon completion of construction, the following clearances shall be maintained:

  - 25' Horizontally from centerline of nearest track
  - 23' 6" Vertically above top of rail

- **1.03.05** Any infringement within State statutory clearances due to the Contractor's operations must be submitted to the Railway and to the City of Victorville and must not be undertaken until approved in writing by the Railway, and until the City of Victorville has obtained any necessary authorization from the State Regulatory Authority for the infringement. No extra compensation will be allowed in the event the Contractor's work is delayed pending Railway approval, and/or the State Regulatory Authority's approval.

- **1.03.06** In the case of impaired vertical clearance above top of rail, Railway will have the option of installing tell-tales or other protective devices Railway deems necessary for protection of Railway operations. The cost of tell-tales or protective devices will be borne by the Agency.

- **1.03.07** The details of construction affecting the Railway's Property and tracks not included in the contract plans must be submitted to the Railway by City of Victorville for approval before work is undertaken and this work must not be undertaken until approved by the Railway.

- **1.03.08** At other than public road crossings, the Contractor must not move any equipment or materials across Railway's tracks until permission has been obtained from the Railway. The Contractor must obtain a "Temporary Construction Crossing Agreement" from the Railway prior to moving his equipment or materials across the Railways tracks. The temporary crossing must be gated and locked at all times when not required for use by the Contractor. The temporary crossing for use of the

Contractor will be constructed and, at the completion of the project, removed at the expense of the Contractor.

- **1.03.09** Discharge, release or spill on the Railway Property of any hazardous substances, oil, petroleum, constituents, pollutants, contaminants, or any hazardous waste is prohibited and Contractor must immediately notify the Railway's Resource Operations Center at 1(800) 832-5452, of any discharge, release or spills in excess of a reportable quantity. Contractor must not allow Railway Property to become a treatment, storage or transfer facility as those terms are defined in the Resource Conservation and Recovery Act or any state analogue.

- **1.03.10** The Contractor upon completion of the work covered by this contract, must promptly remove from the Railway's Property all of Contractor's tools, equipment, implements and other materials, whether brought upon said property by said Contractor or any Subcontractor, employee or agent of Contractor or of any Subcontractor, and must cause Railway's Property to be left in a condition acceptable to the Railway's representative.

1.04 Contractor Roadway Worker on Track Safety Program and Safety Action Plan:

- **1.04.01** Each Contractor that will perform work within 25 feet of the centerline of a track must develop and implement a Roadway Worker Protection/On Track Safety Program and work with Railway Project Representative to develop an on track safety strategy as described in the guidelines listed in the on track safety portion of the Safety Orientation. This Program must provide Roadway Worker protection/on track training for all employees of the Contractor, its subcontractors, agents or invitees. This training is reinforced at the job site through job safety briefings. Additionally, each Contractor must develop and implement the Safety Action Plan, as provided for on the web site **www.BNSFContractor.com**, which will be made available to Railway prior to commencement of any work on Railway Property. During the performance of work, the Contractor must audit its work activities. The Contractor must designate an on-site Project Supervisor who will serve as the contact person for the Railway and who will maintain a copy of the Safety Action Plan, safety audits, and Material Safety Datasheets (MSDS), at the job site.

- **1.04.02** Contractor shall have a background investigation performed on all of its employees, subcontractors and agents who will be performing any services for Railroad under this Agreement which are determined by Railroad in its sole discretion **a)** to be on Railroad's property, or **b)** that require access to Railroad Critical Infrastructure, Railroad Critical Information Systems, Railroad's Employees, Hazardous Materials on Railroad's property or is being transported by or otherwise

in the custody of Railroad, or Freight in Transit involving Railroad.

The required background screening shall at a minimum meet the rail industry background screening criteria defined by the e-RAILSAFE Program as outlined at www.everifile.com, in addition to any other applicable regulatory requirements.

Contractor shall obtain written consent from all its employees, subcontractors or agents screened in compliance with the e-RAILSAFE Program to participate in the Program on their behalf and to release completed background information to Railroad's designee. Contractor shall be subject to periodic audit to ensure compliance.

Contractor subject to the e-RAILSAFE Program hereunder shall not permit any of its employees, subcontractors or agents to perform services hereunder who are not first approved under e-RAILSAFE Program standards. Railroad shall have the right to deny entry onto its premises or access as described in this section above to any of Contractor's employees, subcontractors or agents who do not display the authorized identification badge issued by a background screening service meeting the standards set forth in the e-RAILSAFE Program, or who in Railroad's opinion, which may not be unreasonable, may pose a threat to the safety or security of Railroad's operations, assets or personnel.

Contractors shall be responsible for ensuring that its employees, subcontractors and agents are United States citizens or legally working in the United States under a lawful and appropriate work VISA or other work authorization.

1.05 Railway Flagger Services:

- **1.05.01** The Contractor must give Railway's Roadmaster (909) 386-4730 a minimum of thirty (30) calendar days advance notice when flagging services will be required so that the Roadmaster can make appropriate arrangements (i.e., bulletin the flagger's position). If flagging services are scheduled in advance by the Contractor and it is subsequently determined by the parties hereto that such services are no longer necessary, the Contractor must give the Roadmaster five (5) working days advance notice so that appropriate arrangements can be made to abolish the position pursuant to union requirements.

- **1.05.02** Unless determined otherwise by Railway's Project Representative, Railway flagger will be required and furnished when Contractor's work activities are located over, under and/or within twenty-five (25) feet measured horizontally from centerline of the nearest track and when cranes or similar equipment positioned beyond 25-feet from the track centerline could foul the track in the event of tip over

or other catastrophic occurrence, but not limited thereto for the following conditions:

- **1.05.02a** When, upon inspection by Railway's Representative, other conditions warrant.

- **1.05.02b** When any excavation is performed below the bottom of tie elevation, if, in the opinion of Railway's representative, track or other Railway facilities may be subject to movement or settlement.

- **1.05.02c** When work in any way interferes with the safe operation of trains at timetable speeds.

- **1.05.02d** When any hazard is presented to Railway track, communications, signal, electrical, or other facilities either due to persons, material, equipment or blasting in the vicinity.

- **1.05.02e** Special permission must be obtained from the Railway before moving heavy or cumbersome objects or equipment which might result in making the track impassable.

- **1.05.03** Flagging services will be performed by qualified Railway flaggers.

  - **1.05.03a** Flagging crew generally consists of one employee. However, additional personnel may be required to protect Railway Property and operations, if deemed necessary by the Railways Representative.

  - **1.05.03b** Each time a flagger is called, the minimum period for billing will be the eight (8) hour basic day.

  - **1.05.03c** The cost of flagger services provided by the Railway will be borne by City of Victorville. The estimated cost for one (1) flagger is approximately between $800.00-$1,600.00 for an eight (8) hour basic day with time and one-half or double time for overtime, rest days and holidays. The estimated cost for each flagger includes vacation allowance, paid holidays, Railway and unemployment insurance, public liability and property damage insurance, health and welfare benefits, vehicle, transportation, meals, lodging, radio, equipment, supervision and other costs incidental to performing flagging services. Negotiations for Railway labor or collective bargaining agreements and rate changes authorized by appropriate Federal authorities may increase actual or estimated flagging rates. **THE FLAGGING RATE IN EFFECT AT THE TIME OF PERFORMANCE BY THE CONTRACTOR HEREUNDER WILL BE USED TO CALCULATE THE ACTUAL COSTS OF FLAGGING PURSUANT TO THIS**

PARAGRAPH.

- **1.05.03d** The average train traffic on this route is 74 freight trains per 24-hour period at a timetable speed 70 MPH and 2 passenger trains at a timetable speed of 79 MPH.

1.06 Contractor General Safety Requirements

- **1.06.01** Work in the proximity of railway track(s) is potentially hazardous where movement of trains and equipment can occur at any time and in any direction. All work performed by contractors within 25 feet of any track must be in compliance with FRA Roadway Worker Protection Regulations.

- **1.06.02** Before beginning any task on Railway Property, a thorough job safety briefing must be conducted with all personnel involved with the task and repeated when the personnel or task changes. If the task is within 25 feet of any track, the job briefing must include the Railway's flagger, as applicable, and include the procedures the Contractor will use to protect its employees, subcontractors, agents or invitees from moving any equipment adjacent to or across any Railway track(s).

- **1.06.03** Workers must not work within 25 feet of the centerline of any track without an on track safety strategy approved by the Railway's Project Representative. When authority is provided, every contractor employee must know: (1) who the Railway flagger is, and how to contact the flagger, (2) limits of the authority, (3) the method of communication to stop and resume work, and (4) location of the designated places of safety. Persons or equipment entering flag/work limits that were not previously job briefed, must notify the flagger immediately, and be given a job briefing when working within 25 feet of the center line of track.

- **1.06.04** When Contractor employees are required to work on the Railway Property after normal working hours or on weekends, the Railway's representative in charge of the project must be notified. A minimum of two employees must be present at all times.

- **1.06.05** Any employees, agents or invitees of Contractor or its subcontractors under suspicion of being under the influence of drugs or alcohol, or in the possession of same, will be removed from the Railway's Property and subsequently released to the custody of a representative of Contractor management. Future access to the Railway's Property by that employee will be denied.

- **1.06.06** Any damage to Railway Property, or any hazard noticed on passing trains must be reported immediately to the Railway's representative in charge of the project. Any vehicle or machine which may come in contact with track, signal

equipment, or structure (bridge) and could result in a train derailment must be reported immediately to the Railway representative in charge of the project and to the Railway's Resource Operations Center at 1(800) 832-5452. Local emergency numbers are to be obtained from the Railway representative in charge of the project prior to the start of any work and must be posted at the job site.

- **1.06.07** For safety reasons, all persons are prohibited from having pocket knives, firearms or other deadly weapons in their possession while working on Railway's Property.

- **1.06.08** All personnel protective equipment (PPE) used on Railway Property must meet applicable OSHA and ANSI specifications. Current Railway personnel protective equipment requirements are listed on the web site, **www.BNSFContractor.com,** however, a partial list of the requirements include: a) safety glasses with permanently affixed side shields (no yellow lenses); b) hard hats; c) safety shoe with: hardened toes, above-the-ankle lace-up and a defined heel; and d) high visibility retro-reflective work wear. The Railway's representative in charge of the project is to be contacted regarding local specifications for meeting requirements relating to hi-visibility work wear. Hearing protection, fall protection, gloves, and respirators must be worn as required by State and Federal regulations. **(NOTE – Should there be a discrepancy between the information contained on the web site and the information in this paragraph, the web site will govern.)**

- **1.06.09 THE CONTRACTOR MUST NOT PILE OR STORE ANY MATERIALS, MACHINERY OR EQUIPMENT CLOSER THAN 25'-0" TO THE CENTER LINE OF THE NEAREST RAILWAY TRACK. MATERIALS, MACHINERY OR EQUIPMENT MUST NOT BE STORED OR LEFT WITHIN 250 FEET OF ANY HIGHWAY/RAIL AT-GRADE CROSSINGS OR TEMPORARY CONSTRUCTION CROSSING, WHERE STORAGE OF THE SAME WILL OBSTRUCT THE VIEW OF A TRAIN APPROACHING THE CROSSING. PRIOR TO BEGINNING WORK, THE CONTRACTOR MUST ESTABLISH A STORAGE AREA WITH CONCURRENCE OF THE RAILWAY'S REPRESENTATIVE.**

- **1.06.10** Machines or vehicles must not be left unattended with the engine running. Parked machines or equipment must be in gear with brakes set and if equipped with blade, pan or bucket, they must be lowered to the ground. All machinery and equipment left unattended on Railway's Property must be left inoperable and secured against movement. (See internet Engineering Contractor Safety Orientation program for more detailed specifications)

- **1.06.11** Workers must not create and leave any conditions at the work site that would interfere with water drainage. Any work performed over water must meet all Federal, State and Local regulations.

- **1.06.12** All power line wires must be considered dangerous and of high voltage unless informed to the contrary by proper authority. For all power lines the minimum clearance between the lines and any part of the equipment or load must be; 200 KV or below - 15 feet; 200 to 350 KV - 20 feet; 350 to 500 KV - 25 feet; 500 to 750 KV - 35 feet; and 750 to 1000 KV - 45 feet. If capacity of the line is not known, a minimum clearance of 45 feet must be maintained. A person must be designated to observe clearance of the equipment and give a timely warning for all operations where it is difficult for an operator to maintain the desired clearance by visual means.

1.07 Excavation:

- **1.07.01** Before excavating, the Contractor must determine whether any underground pipe lines, electric wires, or cables, including fiber optic cable systems are present and located within the Project work area. The Contractor must determine whether excavation on Railway's Property could cause damage to buried cables resulting in delay to Railway traffic and disruption of service to users. Delays and disruptions to service may cause business interruptions involving loss of revenue and profits. Before commencing excavation, the Contractor must contact BNSF's Field Engineering Representative (909) 386-4079. All underground and overhead wires will be considered HIGH VOLTAGE and dangerous until verified with the company having ownership of the line. **It is the Contractor's responsibility to notify any other companies that have underground utilities in the area and arrange for the location of all underground utilities before excavating.**

- **1.07.02** The Contractor must cease all work and notify the Railway immediately before continuing excavation in the area if obstructions are encountered which do not appear on drawings. If the obstruction is a utility and the owner of the utility can be identified, then the Contractor must also notify the owner immediately. If there is any doubt about the location of underground cables or lines of any kind, no work must be performed until the exact location has been determined. There will be no exceptions to these instructions.

- **1.07.03** All excavations must be conducted in compliance with applicable OSHA regulations and, regardless of depth, must be shored where there is any danger to tracks, structures or personnel.

- **1.07.04** Any excavations, holes or trenches on the Railway's Property must be covered, guarded and/or protected when not being worked on. When leaving work site areas at night and over weekends, the areas must be secured and left in a condition that will ensure that Railway employees and other personnel who may be working or passing through the area are protected from all hazards. All excavations must be back filled as soon as possible.

BNSF RAILWAY

1.08 Hazardous Waste, Substances and Material Reporting:

- **1.08.01** If Contractor discovers any hazardous waste, hazardous substance, petroleum or other deleterious material, including but not limited to any non-containerized commodity or material, on or adjacent to Railway's Property, in or near any surface water, swamp, wetlands or waterways, while performing any work under this Agreement, Contractor must immediately: (a) notify the Railway's Resource Operations Center at 1(800) 832-5452, of such discovery: (b) take safeguards necessary to protect its employees, subcontractors, agents and/or third parties: and (c) exercise due care with respect to the release, including the taking of any appropriate measure to minimize the impact of such release.

1.09 Personal Injury Reporting

- **1.09.01** The Railway is required to report certain injuries as a part of compliance with Federal Railroad Administration (FRA) reporting requirements. Any personal injury sustained by an employee of the Contractor, subcontractor or Contractor's invitees while on the Railway's Property must be reported immediately (by phone mail if unable to contact in person) to the Railway's representative in charge of the project. The Non-Employee Personal Injury Data Collection Form contained herein is to be completed and sent by Fax to the Railway at 1(817) 352-7595 and to the Railway's Project Representative no later than the close of shift on the date of the injury.

BNSF RAILWAY

NON-EMPLOYEE PERSONAL INJURY DATA COLLECTION

(If injuries are in connection with rail equipment accident/incident, highway rail grade crossing accident or automobile accident, ensure that appropriate information is obtained, forms completed and that data entry personnel are aware that injuries relate to that specific event.)

Injured Person Type:

- ☐ Passenger on train (C)
- ☐ Non-employee (N) *(i.e., emp of another railroad, or, non-BNSF emp involved in vehicle accident, including company vehicles)*
- ☐ Contractor/safety sensitive (F)
- ☐ Contractor/non-safety sensitive (G)
- ☐ Volunteer/safety sensitive (H)
- ☐ Volunteer/other non-safety sensitive (I)
- ☐ Non-trespasser (D) - to include highway users involved in highway rail grade crossing accidents who did not go around or through gates
- ☐ Trespasser (E) - to include highway users involved in highway rail grade crossing accidents who went around or through gates
- ☐ Non-trespasser (J) - Off railroad property

If train involved, Train ID: _____

Transmit attached information to Accident/Incident Reporting Center by:
Fax 1-817-352-7595 or by Phone 1-800-697-6736 **or email to:** Accident-Reporting.Center@BNSF.com

Officer Providing Information:

_____ _____ _____
(Name) (Employee No.) (Phone #)

REPORT PREPARED TO COMPLY WITH FEDERAL ACCIDENT REPORTING REQUIREMENTS AND PROTECTED FROM DISCLOSURE PURSUANT TO 49 U.S.C. 20903 AND 83 U.S.C. 490

NON-EMPLOYEE PERSONAL INJURY DATA COLLECTION

INFORMATION REQUIRED TO BE COLLECTED PURSUANT TO FEDERAL REGULATION. IT SHOULD BE USED FOR COMPLIANCE WITH FEDERAL REGULATIONS ONLY AND IT IS NOT INTENDED TO PRESUME ACCEPTANCE OF RESPONSIBILITY OR LIABILITY.

1. Accident City/St: _____ 2. Date: _____ Time: _____

County: _____ 3. Temperature: _____ 4. Weather: _____
(if non BNSF location)

Mile Post / Line Segment: _____

5. Driver's License No (and state) or other ID: _____ **SSN (required)**: _____

6. Name (last, first, mi): _____

7. Address: _____ City: _____ St: _____ Zip: _____

8. Date of Birth: _____ and/or Age: _____ Gender: _____
(if available)

Phone Number: _____ Employer: _____

9. Injury: _____ 10. Body Part: _____
(i.e., Laceration, etc.) (i.e., Hand, etc.)

11. Description of Accident (To include location, action, result, etc.): _____

_____

_____

_____

12. Treatment:

- ☐ First Aid Only _____
- ☐ Required Medical Treatment _____
- ☐ Other Medical Treatment _____

13. Dr. Name: _____ Date: _____

14. Dr. Address:

Street: _____ City: _____ St: _____ Zip: _____

15. Hospital Name: _____

16. Hospital Address:

Street: _____ City: _____ St: _____ Zip: _____

17. Diagnosis: _____

REPORT PREPARED TO COMPLY WITH FEDERAL ACCIDENT REPORTING REQUIREMENTS AND PROTECTED FROM DISCLOSURE PURSUANT TO 49 U.S.C. 20903 AND 83 U.S.C. 490

EXHIBIT "C-1"

Agreement Between
BNSF RAILWAY COMPANY
and the
CONTRACTOR

Railway File: **BF-10010127**

Agency Project: **Bear Valley Cutoff Widening Project**

_____ hereinafter called "Contractor"), has entered into an agreement (hereinafter called "Agreement") dated _____, 201_, with the City of Victorville for the performance of certain work in connection with the following project: Bear Valley Cutoff Overpass Widening Performance of such work will necessarily require Contractor to enter **BNSF RAILWAY COMPANY** (hereinafter called "Railway") right of way and property (hereinafter called "Railway Property"). The Agreement provides that no work will be commenced within Railway Property until the Contractor employed in connection with said work for City of Victorville (i) executes and delivers to Railway an Agreement in the form hereof, and (ii) provides insurance of the coverage and limits specified in such Agreement and Section 3 herein. If this Agreement is executed by a party who is not the Owner, General Partner, President or Vice President of Contractor, Contractor must furnish evidence to Railway certifying that the signatory is empowered to execute this Agreement on behalf of Contractor.

Accordingly, in consideration of Railway granting permission to Contractor to enter upon Railway Property and as an inducement for such entry, Contractor, effective on the date of the Agreement, has agreed and does hereby agree with Railway as follows:

1) RELEASE OF LIABILITY AND INDEMNITY

Contractor hereby waives, releases, indemnifies, defends and holds harmless Railway for all judgments, awards, claims, demands, and expenses (including attorneys' fees), for injury or death to all persons, including Railway's and Contractor's officers and employees, and for loss and damage to property belonging to any person, arising in any manner from Contractor's or any of Contractor's subcontractors' acts or omissions or any work performed on or about Railway's property or right-of-way. **THE LIABILITY ASSUMED BY CONTRACTOR WILL NOT BE AFFECTED BY THE FACT, IF IT IS A FACT, THAT THE DESTRUCTION, DAMAGE, DEATH, OR INJURY WAS OCCASIONED BY OR CONTRIBUTED TO BY THE NEGLIGENCE OF RAILWAY, ITS AGENTS, SERVANTS, EMPLOYEES OR OTHERWISE,**

EXCEPT TO THE EXTENT THAT SUCH CLAIMS ARE PROXIMATELY CAUSED BY THE WILLFUL MISCONDUCT OR SOLE NEGLIGENCE OF RAILWAY.

THE INDEMNIFICATION OBLIGATION ASSUMED BY CONTRACTOR INCLUDES ANY CLAIMS, SUITS OR JUDGMENTS BROUGHT AGAINST RAILWAY UNDER THE FEDERAL EMPLOYEE'S LIABILITY ACT, INCLUDING CLAIMS FOR STRICT LIABILITY UNDER THE SAFETY APPLIANCE ACT OR THE LOCOMOTIVE INSPECTION ACT, WHENEVER SO CLAIMED.

Contractor further agrees, at its expense, in the name and on behalf of Railway, that it will adjust and settle all claims made against Railway, and will, at Railway's discretion, appear and defend any suits or actions of law or in equity brought against Railway on any claim or cause of action arising or growing out of or in any manner connected with any liability assumed by Contractor under this Agreement for which Railway is liable or is alleged to be liable. Railway will give notice to Contractor, in writing, of the receipt or dependency of such claims and thereupon Contractor must proceed to adjust and handle to a conclusion such claims, and in the event of a suit being brought against Railway, Railway may forward summons and complaint or other process in connection therewith to Contractor, and Contractor, at Railway's discretion, must defend, adjust, or settle such suits and protect, indemnify, and save harmless Railway from and against all damages, judgments, decrees, attorney's fees, costs, and expenses growing out of or resulting from or incident to any such claims or suits.

In addition to any other provision of this Agreement, in the event that all or any portion of this Article shall be deemed to be inapplicable for any reason, including without limitation as a result of a decision of an applicable court, legislative enactment or regulatory order, the parties agree that this Article shall be interpreted as requiring Contractor to indemnify Railway to the fullest extent permitted by applicable law. **THROUGH THIS AGREEMENT THE PARTIES EXPRESSLY INTEND FOR CONTRACTOR TO INDEMNIFY RAILWAY FOR RAILWAY'S ACTS OF NEGLIGENCE.**

It is mutually understood and agreed that the assumption of liabilities and indemnification provided for in this Agreement survive any termination of this Agreement.

2) TERM

This Agreement is effective from the date of the Agreement until (i) the completion of the project set forth herein, and (ii) full and complete payment to Railway of any and all sums or other amounts owing and due hereunder.

3) INSURANCE

Contractor shall, at its sole cost and expense, procure and maintain during the life of this Agreement the following insurance coverage:

A. Commercial General Liability insurance. This insurance shall contain broad form contractual liability with a combined single limit of a minimum of $5,000,000 each occurrence and an aggregate limit of at least $10,000,000 but in no event less than the amount otherwise carried by the Contractor. Coverage must be purchased on a post 2004 ISO occurrence form or equivalent and include coverage for, but not limit to the following:

- Bodily Injury and Property Damage
- Personal Injury and Advertising Injury
- Fire legal liability
- Products and completed operations

This policy shall also contain the following endorsements, which shall be indicated on the certificate of insurance:

- The definition of insured contract shall be amended to remove any exclusion or other limitation for any work being done within 50 feet of railroad property.
- Waver of subrogation in favor of and acceptable to Railway.
- Additional insured endorsement in favor of and acceptable to Railway.
- Separation of insureds.
- The policy shall be primary and non-contributing with respect to any insurance carried by Railway.

It is agreed that the workers' compensation and employers' liability related exclusions in the Commercial General Liability insurance policy(s) required herein are intended to apply to employees of the policy holder and shall not apply to ***Railway*** employees.

No other endorsements limiting coverage as respects obligations under this Agreement may be included on the policy with regard to the work being performed under this agreement.

B. Business Automobile Insurance. This insurance shall contain a combined single limit of at least $1,000,000 per occurrence, and include coverage for, but not limited to the following:

- Bodily injury and property damage
- Any and all vehicles owned, used or hired

The policy shall also contain the following endorsements or language, which shall be indicated on the certificate of insurance:

- Waiver of subrogation in favor of and acceptable to Railway.
- Additional insured endorsement in favor of and acceptable to Railway.
- Separation of insureds.
- The policy shall be primary and non-contributing with respect to any insurance carried by Railway.

C. Workers Compensation and Employers Liability insurance including coverage for, but not limited to:

- Contractor's statutory liability under the worker's compensation laws of the state(s) in which the work is to be performed. If optional under State law, the insurance must cover all employees anyway.
- Employers' Liability (Part B) with limits of at least $500,000 each accident, $500,000 by disease policy limit, $500,000 by disease each employee.

This policy shall also contain the following endorsements or language, which shall be indicated on the certificate of insurance:

- Waiver of subrogation in favor of and acceptable to Railway.

D. Railroad Protective Liability insurance naming only the ***Railway*** as the Insured with coverage of at least $5,000,000 per occurrence and $10,000,000 in the aggregate. The policy Must be issued on a standard ISO form CG 00 35 12 04 and include the following:

- Endorsed to include the Pollution Exclusion Amendment
- Endorsed to include the Limited Seepage and Pollution Endorsement.
- Endorsed to remove any exclusion for punitive damages.
- No other endorsements restricting coverage may be added.
- The original policy must be provided to the ***Railway*** prior to performing any work or services under this Agreement
- Definition of "Physical Damage to Property" shall be endorsed to read: "means direct and accidental loss of or damage to all property owned by any named insured and all property in any named insured' care, custody, and control arising out of the acts or omissions of the contractor named on the Declarations.

In lieu of providing a Railroad Protective Liability Policy, Licensee may participate (if available) in Railway's Blanket Railroad Protective Liability Insurance Policy.

Other Requirements:

Where allowable by law, all policies (applying to coverage listed above) shall contain no exclusion for punitive damages.

Contractor agrees to waive its right of recovery against ***Railway*** for all claims and suits against ***Railway***. In addition, its insurers, through the terms of the policy or policy endorsement, waive their right of subrogation against ***Railway*** for all claims and suits. Contractor further waives its right of recovery, and its insurers also waive their right of subrogation against ***Railway*** for loss of its owned or leased property or property under Contractor's care, custody or control.

Allocated Loss Expense shall be in addition to all policy limits for coverages referenced above.

Contractor is not allowed to self-insure without the prior written consent of ***Railway.*** If granted by ***Railway***, any self-insured retention or other financial responsibility for claims shall be covered directly by Contractor in lieu of insurance. Any and all ***Railway*** liabilities that would otherwise, in accordance with the provisions of this Agreement, be covered by Contractor's insurance will be covered as if Contractor elected not to include a deductible, self-insured retention or other financial responsibility for claims.

Prior to commencing services, Contractor shall furnish to ***Railway*** an acceptable certificate(s) of insurance from an authorized representative evidencing the required coverage(s), endorsements, and amendments. The certificate should be directed to the following address:

BNSF Railway Company
c/o CertFocus
P.O. Box 140528
Kansas City, MO 64114
Toll Free: 877-576-2378
Fax number: 817-840-7487
Email: BNSF@certfocus.com
www.certfocus.com

Contractor shall notify ***Railway*** in writing at least 30 days prior to any cancellation, non-renewal, substitution or material alteration.

Any insurance policy shall be written by a reputable insurance company acceptable to ***Railway*** or with a current Best's Guide Rating of A- and Class VII or better, and authorized to do business in the state(s) in which the service is to be provided.

If coverage is purchased on a "claims made" basis, Contractor hereby agrees to maintain coverage in force for a minimum of three years after expiration, cancellation or termination of this Agreement. Annually Contractor agrees to provide evidence of such coverage as required hereunder.

Contractor represents that this Agreement has been thoroughly reviewed by Contractor's insurance agent(s)/broker(s), who have been instructed by Contractor to procure the insurance coverage required by this Agreement.

Not more frequently than once every five years, ***Railway*** may reasonably modify the required insurance coverage to reflect then-current risk management practices in the railroad industry and underwriting practices in the insurance industry.

If any portion of the operation is to be subcontracted by Contractor, Contractor shall require that the subcontractor shall provide and maintain insurance coverage(s) as set forth herein, naming ***Railway*** as an additional insured, and shall require that the subcontractor shall release, defend and indemnify ***Railway*** to the same extent and under the same terms and conditions as Contractor is required to release, defend and indemnify ***Railway*** herein.

Failure to provide evidence as required by this section shall entitle, but not require, ***Railway*** to terminate this Agreement immediately. Acceptance of a certificate that does not comply with this section shall not operate as a waiver of Contractor's obligations hereunder.

The fact that insurance (including, without limitation, self-insurance) is obtained by Contractor shall not be deemed to release or diminish the liability of Contractor including, without limitation, liability under the indemnity provisions of this Agreement. Damages recoverable by ***Railway*** shall not be limited by the amount of the required insurance coverage.

In the event of a claim or lawsuit involving ***Railway*** arising out of this agreement, Contractor will make available any required policy covering such claim or lawsuit.

These insurance provisions are intended to be a separate and distinct obligation on the part of the Contractor. Therefore, these provisions shall be enforceable and Contractor shall be bound thereby regardless of whether or not indemnity provisions are determined to be enforceable in the jurisdiction in which the work covered hereunder is performed.

For purposes of this section, ***Railway*** shall mean "Burlington Northern Santa Fe LLC", "BNSF Railway Company" and the subsidiaries, successors, assigns and affiliates of each.

4) SALES AND OTHER TAXES

In the event applicable sales taxes of a state or political subdivision of a state of the United States are levied or assessed in connection with and directly related to any amounts invoiced by Contractor to Railway ("Sales Taxes"), Railway shall be responsible for paying only the Sales Taxes that Contractor separately states on the invoice or other billing documents provided to Railway; *provided, however,* that (i) nothing herein shall preclude Railway from claiming whatever Sales Tax exemptions are applicable to amounts Contractor bills Railway, (ii) Contractor shall be responsible for all sales, use, excise, consumption, services and other taxes which may accrue on all services, materials, equipment, supplies or fixtures that Contractor and its subcontractors use or consume in the performance of this Agreement, (iii) Contractor shall be responsible for Sales Taxes (together with any penalties, fines or interest thereon) that Contractor fails to separately state on the invoice or other billing documents provided to Railway or fails to collect at the time of payment by Railway of invoiced amounts (except where Railway claims a Sales Tax exemption), and (iv) Contractor shall be responsible for Sales Taxes (together with any penalties, fines or interest thereon) if Contractor fails to issue separate invoices for each state in which Contractor delivers goods, provides services or, if applicable, transfers intangible rights to Railway.

Upon request, Contractor shall provide Railway satisfactory evidence that all taxes (together with any penalties, fines or interest thereon) that Contractor is responsible to pay under this Agreement have been paid. If a written claim is made against Contractor for Sales Taxes with respect to which Railway may be liable for under this Agreement, Contractor shall promptly notify Railway of such claim and provide Railway copies of all correspondence received from the taxing authority. Railway shall have the right to contest, protest, or claim a refund, in Railway's own name, any Sales Taxes paid by Railway to Contractor or for which Railway might otherwise be responsible for under this Agreement; provided, however, that if Railway is not permitted by law to contest any such Sales Tax in its own name, Contractor shall, if requested by Railway at Railway's sole cost and expense, contest in Contractor's own name the validity, applicability or amount of such Sales Tax and allow Railway to control and conduct such contest.

Railway retains the right to withhold from payments made under this Agreement amounts required to be withheld under tax laws of any jurisdiction. If Contractor is claiming a withholding exemption or a reduction in the withholding rate of any jurisdiction on any payments under this Agreement, before any payments are made (and in each succeeding period or year as required by law), Contractor agrees to furnish to Railway a properly completed exemption form prescribed by such jurisdiction. Contractor shall be responsible for any taxes, interest or penalties assessed against Railway with respect to withholding taxes that Railway does not withhold from payments to Contractor.

5) EXHIBIT "C" CONTRACTOR REQUIREMENTS

The Contractor must observe and comply with all provisions, obligations, requirements and limitations contained in the Agreement, and the Contractor Requirements set forth on Exhibit "C" attached to the Agreement and this Agreement, including, but not be limited to, payment of all costs incurred for any damages to Railway roadbed, tracks, and/or appurtenances thereto, resulting from use, occupancy, or presence of its employees, representatives, or agents or subcontractors on or about the construction site. Contractor shall execute a Temporary Construction Crossing Agreement or Private Crossing Agreement (http://www.bnsf.com/communities/faqs/permits-real-estate/), for any temporary crossing requested to aid in the construction of this Project, if approved by BNSF.

6) TRAIN DELAY

Contractor is responsible for and hereby indemnifies and holds harmless Railway (including its affiliated railway companies, and its tenants) for, from and against all damages arising from any unscheduled delay to a freight or passenger train which affects Railway's ability to fully utilize its equipment and to meet customer service and contract obligations. Contractor will be billed, as further provided below, for the economic losses arising from loss of use of equipment, contractual loss of incentive pay and bonuses and contractual penalties resulting from train delays, whether caused by Contractor, or subcontractors, or by the Railway performing work under this Agreement. Railway agrees that it will not perform any act to unnecessarily cause train delay.

For loss of use of equipment, Contractor will be billed the current freight train hour rate per train as determined from Railway's records. Any disruption to train traffic may cause delays to multiple trains at the same time for the same period.

Additionally, the parties acknowledge that passenger, U.S. mail trains and certain other grain, intermodal, coal and freight trains operate under incentive/penalty contracts between Railway and its customer(s). Under these arrangements, if Railway does not meet its contract service commitments, Railway may suffer loss of performance or incentive pay and/or be subject to penalty payments. Contractor is responsible for any train performance and incentive penalties or other contractual economic losses actually incurred by Railway which are attributable to a train delay caused by Contractor or its subcontractors.

The contractual relationship between Railway and its customers is proprietary and confidential. In the event of a train delay covered by this Agreement, Railway will share information relevant to any train delay to the extent consistent with Railway confidentiality obligations. The rate then in effect at the time of

performance by the Contractor hereunder will be used to calculate the actual costs of train delay pursuant to this agreement.

Contractor and its subcontractors must give Railway's representative Project Engineer (909) 386-4079 weeks advance notice of the times and dates for proposed work windows. Railway and Contractor will establish mutually agreeable work windows for the project. Railway has the right at any time to revise or change the work windows due to train operations or service obligations. Railway will not be responsible for any additional costs or expenses resulting from a change in work windows. Additional costs or expenses resulting from a change in work windows shall be accounted for in Contractor's expenses for the project.

Contractor and subcontractors must plan, schedule, coordinate and conduct all Contractor's work so as to not cause any delays to any trains.

IN WITNESS WHEREOF, each of the parties hereto has caused this Agreement to be executed by its duly authorized officer the day and year first above written.

Contractor

By: _____

Printed Name: _____

Title: _____

BNSF Railway Company

By: _____

Name: _____
Manager Public Projects

Accepted and effective this _____day of 20__.

Contact Person: _____

Address: _____

City: _____

State: _____ Zip: _____

Fax: _____

Phone: _____

E-mail: _____

OVERPASS AGREEMENT

FOR

THE WIDENING OF THE BEAR VALLEY OVERHEAD

EXHIBIT D

RAILROAD WORK COST ESTIMATES

EXHIBIT D

Railroad Work Summary

Railroad Flagging	$329,458
Engineering Inspection/Coordination and Structure Submittal Reviews	$266,640
Total	**$596,098**

***** MAINTAIN PROPRIETARY CONFIDENTIALITY *****

BNSF RAILWAY COMPANY
FHPM ESTIMATE FOR
CITY OF VICTORVILLE

LOCATION THORN | DETAILS OF ESTIMATE | PLAN ITEM : 229582000 | VERSION : 1

PURPOSE, JUSTIFICATION AND DESCRIPTION

FLG - CAS DIV CAJON SUB LS 7600 MP 41.587 - DOT #026086L - 100% BILLABLE TO CITY OF VICTORVILLE

BNSF TO PROVIDE APPROX 250 DAYS FLAGGING FOR BEAR VALLEY WIDENING CONSTRUCTION

REQUESTED BY GREG J. ROUSSEAU 8/22/16

DESCRIPTION	QUANTITY	U/M	COST	TOTAL $
**********				
LABOR				
**********				
FLAGGING - GRADING - CAP	3000.0	MH	91,980	
PAYROLL ASSOCIATED COSTS			55,381	
DA OVERHEADS			84,180	
EQUIPMENT EXPENSES			49,558	
INSURANCE EXPENSES			15,443	
TOTAL LABOR COST			296,542	296,542
**********				
MATERIAL				
**********				
TOTAL MATERIAL COST			0	0
**********				
OTHER				
**********				
TOTAL OTHER ITEMS COST			0	0
PROJECT SUBTOTAL				296,542
CONTINGENCIES				29,654
BILL PREPARATION FEE				3,262
GROSS PROJECT COST				329,458
LESS COST PAID BY BNSF				0
TOTAL BILLABLE COST				329,458

***** MAINTAIN PROPRIETARY CONFIDENTIALITY *****

BNSF RAILWAY COMPANY
FHPM ESTIMATE FOR
CITY OF VICTORVILLE

LOCATION THORN | DETAILS OF ESTIMATE | PLAN ITEM : 229583000 | VERSION : 1

PURPOSE, JUSTIFICATION AND DESCRIPTION

INSP - CAS DIV CAJON SUB LS 7600 MP 41.587 - DOT #026086L - 100% BILLABLE TO CITY OF VICTORVILLE

BNSF TO PROVIDE APPROX 250 DAYS INSPECTION-COORDINATIN-SUBMITTAL REVIEWS

REQUESTED BY GREG J. ROUSSEAU 8/22/16

DESCRIPTION	QUANTITY	U/M	COST	TOTAL $
**********				
LABOR				
**********				
TOTAL LABOR COST			0	0
**********				
MATERIAL				
**********				
TOTAL MATERIAL COST			0	0
**********				
OTHER				
**********				
INSPECTOR/COORDINATOR	250.0	DAY	200,000	
SUBMITTAL REVIEW	1.0	EA	40,000	
TOTAL OTHER ITEMS COST			240,000	240,000
PROJECT SUBTOTAL				240,000
CONTINGENCIES				24,000
BILL PREPARATION FEE				2,640
GROSS PROJECT COST				266,640
LESS COST PAID BY BNSF				0
TOTAL BILLABLE COST				266,640

OVERPASS AGREEMENT

FOR

THE WIDENING OF THE BEAR VALLEY OVERHEAD

EXHIBIT E

FINAL APPROVAL OF PLANS AND SPECIFICATIONS

Exhibit E

Jason L. Sanchez
740 Carnegie Drive
San Bernardino, CA 92408
909-386-4474
Jason.Sanchez@BNSF.com

Date: September 5, 2017

Mr. Brian Gengler
City of Victorville
City Engineer
14343 Civic Drive 5001
Victorville, CA 92393

Re: Final Approval of Plans and Specifications dated _____, 20__, drafted by The City of Victorville (**hereinafter called, the "Plans and Specifications")**

Dear Mr. Gengler:

This letter serves as BNSF RAILWAY COMPANY's ("BNSF") final written approval of the Plans and Specifications covering the widening of the Bear Valley overpass in Victorville, CA. This final written approval is given to The City of Victorville ("Agency") pursuant to Article III, Section 1 of that certain Overpass Agreement between BNSF and Agency, dated _____, 20__, which this Exhibit E is attached to and made a part thereof.

If the Plans and Specifications are revised by Agency subsequent to the date set forth above, this letter shall no longer serve as final written approval of the Plans and Specifications and Agency must resubmit said Plans and Specifications to BNSF for final written approval.

It is understood that the approvals contained in this letter do not cover, the approvals of plans and specifications for any falsework, shoring, and demolition that may be subsequently submitted to BNSF by CITY or its contractor for approval.

BNSF has not reviewed the design details or calculations for structural integrity or engineering accuracy. BNSF accepts no responsibility for errors or omissions in the design of the project.

Regards,

_____
Jason L. Sanchez

OVERPASS AGREEMENT

FOR

THE WIDENING OF THE BEAR VALLEY OVERHEAD

EXHIBIT F

BNSF BRIDGE REQUIREMENTS

Exhibit F

BNSF Bridge Requirements

BRIDGE DESIGN, PLANS & SPECIFICATIONS:

Except for the design of temporary falsework and shoring, BNSF review of the Structure plans will be limited to the vertical and horizontal clearances, sight distance for existing train signals, foundation dimensions and drainage characteristics as they relate to existing and future tracks. BNSF will not review structural design calculations for the permanent Structure unless a member or members are influenced by railroad live loads.

Temporary falsework and shoring plans and calculations must be reviewed and approved by BNSF prior to beginning construction. The Agency shall perform an independent review of the design calculations for temporary falsework and shoring prior to submitting them to BNSF for approval. Temporary construction clearances must be no less than 15 feet measured horizontally from the centerline of the nearest track and 21 feet-6 inches measured vertically from the top of rail of the most elevated track to the bottom of lowest temporary falsework member. State regulatory agencies may have more restrictive requirements for temporary railroad clearances.

For the permanent Structure, the Agency will submit plans showing the least horizontal distance from the centerline of existing and future tracks to the face of the nearest member of the proposed Structure. The location of the least horizontal distance must be accurately described such that BNSF can determine where it will occur in both the horizontal and vertical plane. If the permanent member is within 25 feet of the nearest track (or future track), collision walls shall be incorporated into the permanent Structure design according to American Railway Engineering and Maintenance Association Manual of Recommended Practice - Chapter 8 - Article 2.1.5.

For the permanent Structure, the Agency will submit plans showing the least vertical clearance from top of the most elevated rail of existing and future tracks to the lowest point of the proposed Structure. A profile of the existing top of rail elevation shall be plotted on the bridge plans. The profile shall extend for 500 feet in each direction of the proposed overpass and a separate profile shall be plotted for each track. If the existing top of rail profile(s) is not uniform such that a sag exists in the vicinity of the proposed Structure, the permanent Structure vertical clearance shall be increased sufficiently to accommodate a raise in the track profile to remove the sag. Prior to beginning construction of the permanent Structure, the top of rail elevations should be checked and verified that they have not changed from the assumed elevations utilized for the design of the bridge.

Prior to issuing any invitation to bid on construction of the Structure, the Agency should conduct a pre-bid meeting where prospective Providers have the opportunity to communicate with BNSF personnel regarding site specific train speeds, train density, and general safety requirements for men and equipment working near live tracks. Any invitation to bid and

specifications for the Structure must be submitted to BNSF for review and approval prior to letting of bids for the Project.

BRIDGE CONSTRUCTION:

After awarding the bid, but prior to the Provider entering BNSF's right-of –way or property, the Agency should conduct a pre-construction meeting with BNSF personnel in attendance to reiterate the safety requirements of construction activity adjacent to live tracks.

During construction, BNSF may require an independent engineering inspector to be present during certain critical activities of the Project, including but not limited to: driving foundation piles, erecting falsework, construction of shoring and retaining walls, placing concrete, placing soil backfill and compaction processes. The Agency shall reimburse BNSF for all costs of supplemental inspection services.

Within 90 days of the conclusion of the Project and final acceptance by BNSF, the Agency will provide BNSF with a complete electronic set of the bridge plans labeled "As Built". Those plans will reflect any and all deviations from the original plans that occurred during construction. The "As Built" plans will be submitted in Micro Station *.dgn electronic format (preferred) or AutoCAD *.dwg format. Electronic plans are to be submitted in the original format used for CAD plan preparation and not converted to another format prior to submission. Actual measured "as constructed" clearances shall be shown as well as depth, size and location of all foundation components. The plans shall show dimensioned locations of existing and relocated utilities.

BRIDGE MAINTENANCE:

The Agency will be responsible for maintenance and repair of the Structure including the earth retention components, embankment slopes, erosion control, surface drainage, fencing, deck drains, landscaping, paint, walkways, handrails, lighting, and other improvements associated with the Project.

Fencing and other pedestrian access controls within BNSF's right-of-way and incorporated into the Project shall be designed and maintained by the Agency. Trespasser control shall be the responsibility of the Agency. Graffiti removal will be the responsibility of the Agency.

BRIDGE INSPECTION:

The Agency will conduct annual routine structural inspections. In the event of an earthquake, fire, flood, damage from vehicular impacts or other emergent situations, the Agency will provide an immediate inspection by qualified personnel and notify BNSF of damage that may affect safe passage of trains. If necessary the Agency will embargo weights or provide lane closures or

other such measures to protect the structural integrity of the Structure such that there can be continuous safe passage of trains until repairs are made.

BRIDGE ALTERATIONS:

Except as provided otherwise by this Agreement, there will be no alterations made to the Structure that will alter the railroad vertical or horizontal clearances provided by the original design. Pipelines will be not be added or attached to the Structure without first submitting plans and calculations to BNSF for review and approval.

REQUEST TO CPUC STAFF FOR AUTHORIZATION TO ALTER HIGHWAY-RAIL CROSSING PURSUANT TO GENERAL ORDER 88-B

1. Date Submitted: June 11, 2020

2. Applicant Info

Organization Name:	City of Victorville
Contact Person:	Brian Gengler
Title:	City Engineer
Street Address:	14343 Civic Drive
City:	Victorville
Zip:	92392
Phone:	760-955-5156
Email:	bgengler@ci.victorville.ca.us

3. Crossing proposed to be altered

PUC Crossing Number:	002-37.10-A	
U.S. DOT Crossing Number:	026080V	
Street Name:	Bear Valley Road	
City:	Unincorporated	
County:	San Bernardino	
Average Daily Vehicle Traffic (ADT) on roadway crossing tracks	71,721	
Year ADT count taken (should be within last 5 years)	2018	
Railroad Responsible for Crossing:	Burlington Northern Santa Fe Corp. (BNSF)	
Other Railroads Operating on Tracks:	Amtrak, Union Pacific	
Average Daily Train Traffic and speed from all operating railroads	Train Volume	Maximum Train Speed
Passenger		
Freight	57	60
Transit		

4. Describe Proposed Alterations (including any temporary reduced clearance variance requests):

Bear Valley Road Bridge, between Industrial Boulevard and Ridgecrest Road, provides a grade separated crossing over BNSF railroad tracks which provides six 11 foot lanes, a four foot striped median and a five foot sidewalk on the north side. The proposed alterations will provide six 12 foot lanes, a 12 foot striped median, two 8 foot shoulders and 2 six foot sidewalks, as shown on the attached general plan.

5. Describe the public benefits to be achieved by the proposed alterations:

The public will benefit from the proposed project through improvements to both public safety and convenience. The addition of shoulders, sidewalk, and additional storage for the turn lane at the Ridgecrest Road Signal will reduce vehicle congestion and improve pedestrian and bicycle safety.

6. Explain why a separation of grades is not practicable:

N/A, existing grade separation.

7. Describe crossing warning devices

Current:	N/A, existing grade separation.
Proposed:	N/A, existing grade separation.

8. Temporary Traffic Controls - Include a statement of temporary traffic controls to be provided during construction:

Included in the attachments is a copy of the latest stage construction plans prepared for the project, which includes the proposed temporary traffic controls. During construction, temporary railing (type k) will provide separation along the bridge.

9. CEQA (Applicable only to grade-separation projects). If the project involves grade separation of an existing at grade crossing, then either a copy of the Notice of Exemption from CEQA or other factual evidence that the project is exempt from Public Resources Code Section 21080.13 must be provided.

In compliance with CEQA, the City of Victorville circulated an Initial Study and adopted a Mitigated Negative Declaration (attached) to comply with Public Resources Code CEQA regulations. The Mitigated Negative Declaration was adopted in January 2015.

10. Signature

I, Brian Gengler, am an employee of the City of Victorville and authorized to sign this GO 88-B authorization request letter on its behalf.

Brian Gengler City Engineer — Brian Gengler 6-16-2020

Typed Name and Title — Signature and date

Attachments:

1. Vicinity Map
2. Profile
3. General Plan
4. Stage Construction Plan
5. Construction Schedule
6. Mitigated Negative Declaration Cover Sheet (CEQA Document)

11. Evidence of Agreement:

I Kate Kalinosky, am an employee of BNSF and authorized to sign this letter of agreement on its behalf, hereby declare that BNSF concurs with the proposed project described above.

Kate Kalinosky, Manager Public Projects BNSF	Kate Kalinosky Digitally signed by Kate Kalinosky Date: 2020.07.01 10:14:49 -07'00'
Typed Name and Title	Signature and Date

740 Carnegie Drive

San Bernardino, CA 92408

Address

VICINITY MAP

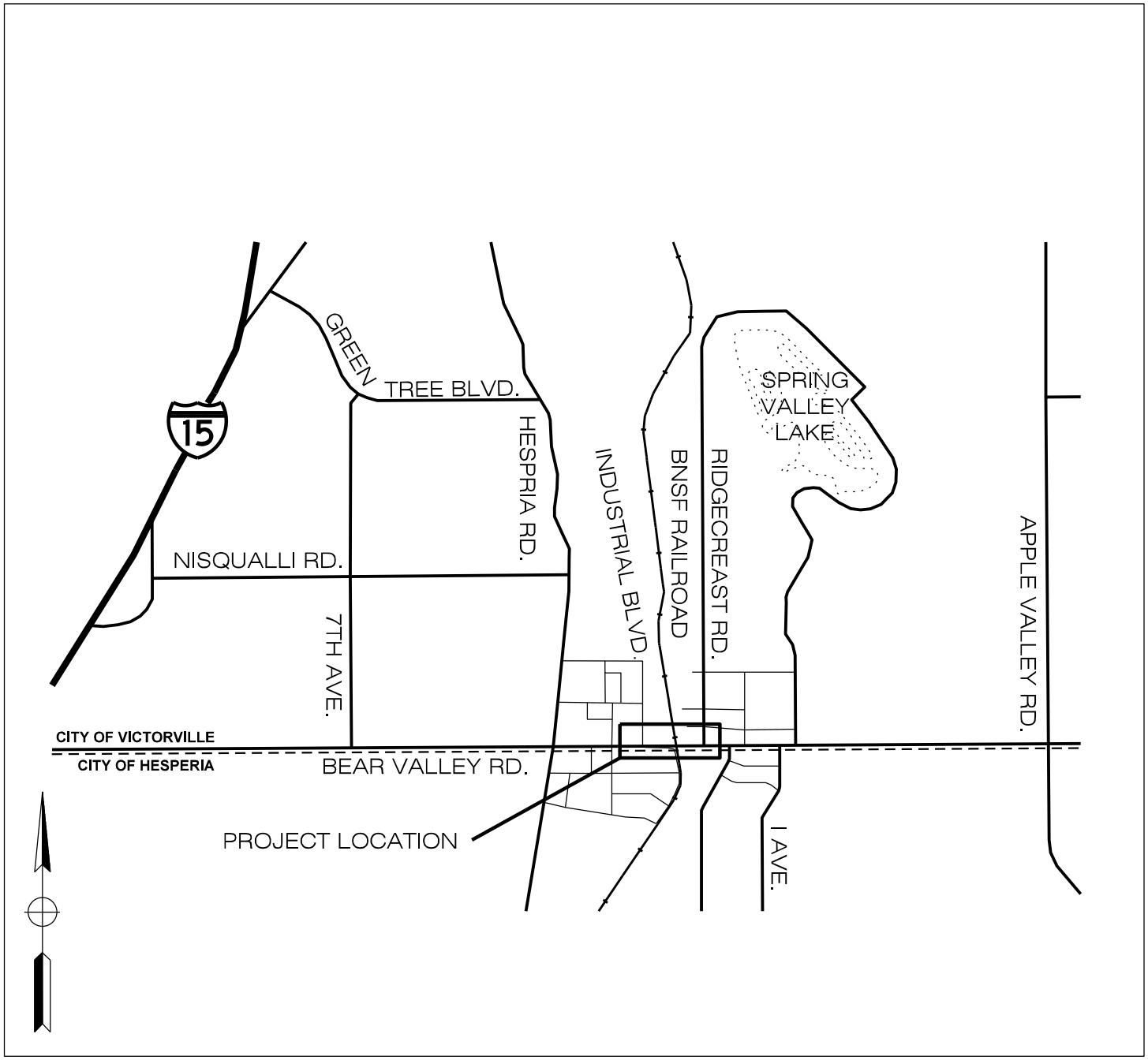

DOKKEN ENGINEERING

110 BLUE RAVINE ROAD, SUITE 200
FOLSOM, CA 95630

(916)858-0642

NO SCALE

VICINITY MAP
BEAR VALLEY ROAD OH
BNSF RAILROAD
BRIDGE

APRIL 2016

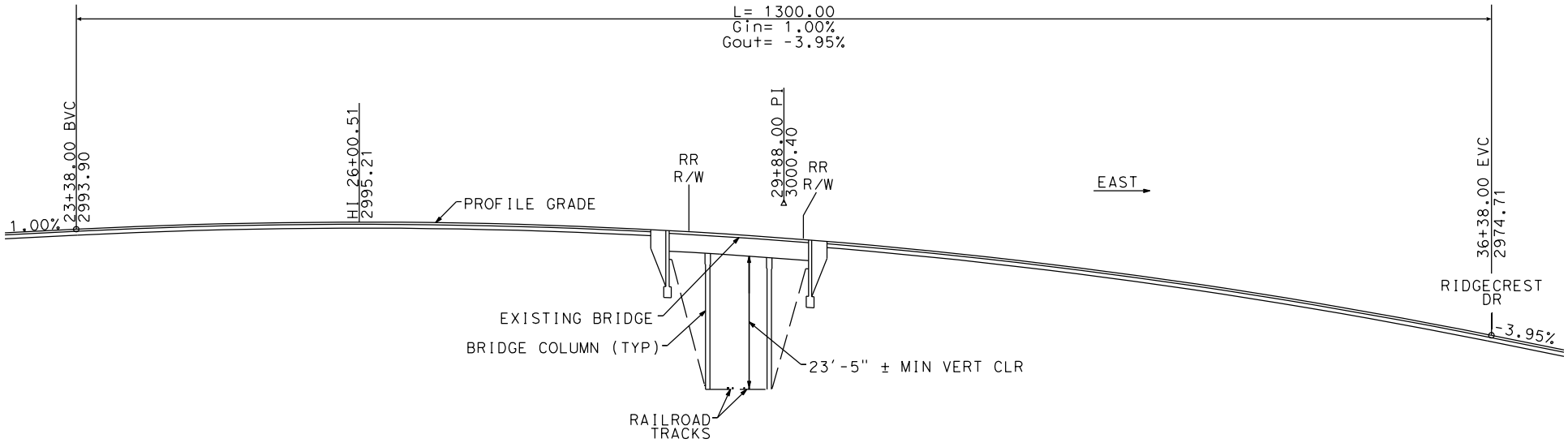

DOKKEN ENGINEERING

110 BLUE RAVINE ROAD, SUITE 200
FOLSOM, CA 95630

(916)858-0642

PROFILE VIEW

BEAR VALLEY ROAD OH
BNSF RAILROAD
BRIDGE

NO SCALE

APRIL 2016

DIST	COUNTY	ROUTE	POST MILES TOTAL PROJECT	SHEET No	TOTAL SHEETS
08	SB	CR		58	81

REGISTERED CIVIL ENGINEER DATE

PLANS APPROVAL DATE

REGISTERED PROFESSIONAL ENGINEER T. OSTERKAMP No. C46783 Exp. 6/30/19 CIVIL STATE OF CALIFORNIA

The State of California or its officers or agents shall not be responsible for the accuracy or completeness of scanned copies of this plan sheet.

DOKKEN ENGINEERING
110 BLUE RAVINE ROAD, SUITE 200
FOLSOM, CA 95630

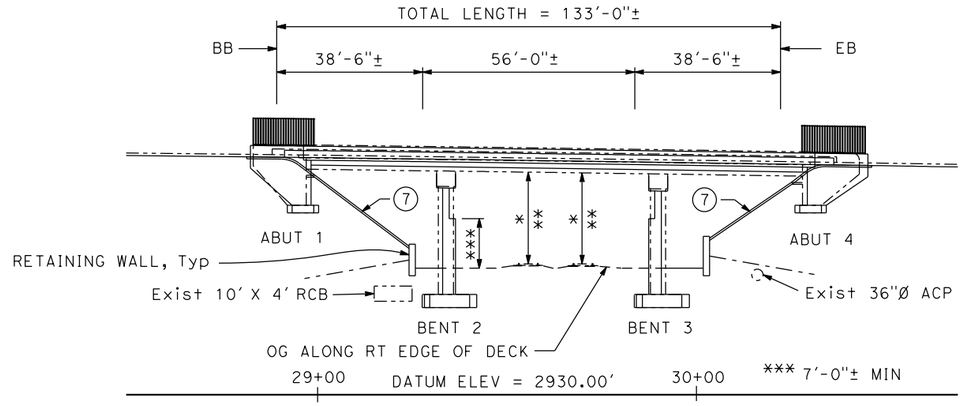

ELEVATION

1" = 20'

	WEST TRACK	EAST TRACK
* MIN VERT CLR TO WIDENING	24'-0"±	23'-5"±
** MIN VERT CLR TO EXISTING	22'-9¼"±	22'-3"±

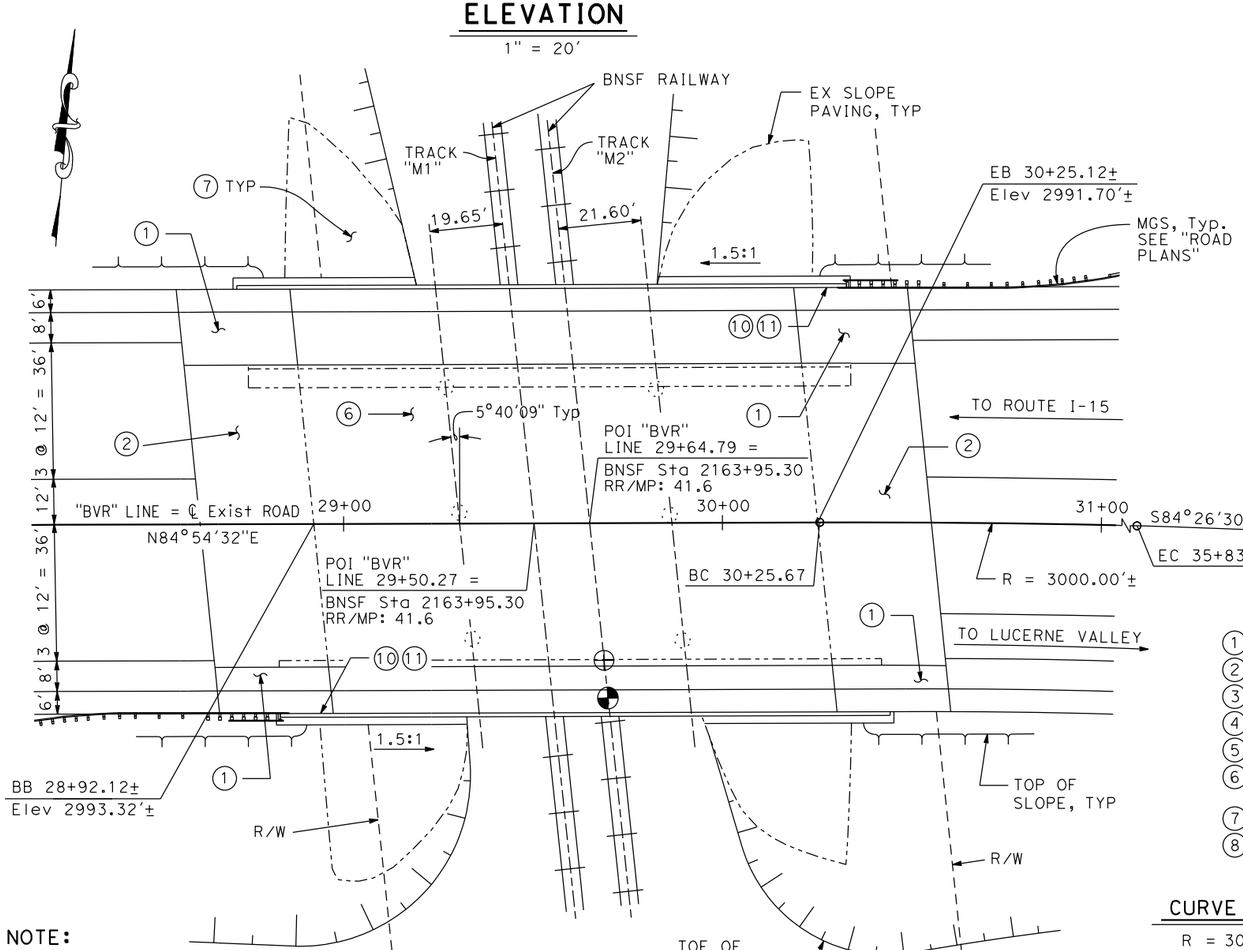

PLAN

1" = 20'

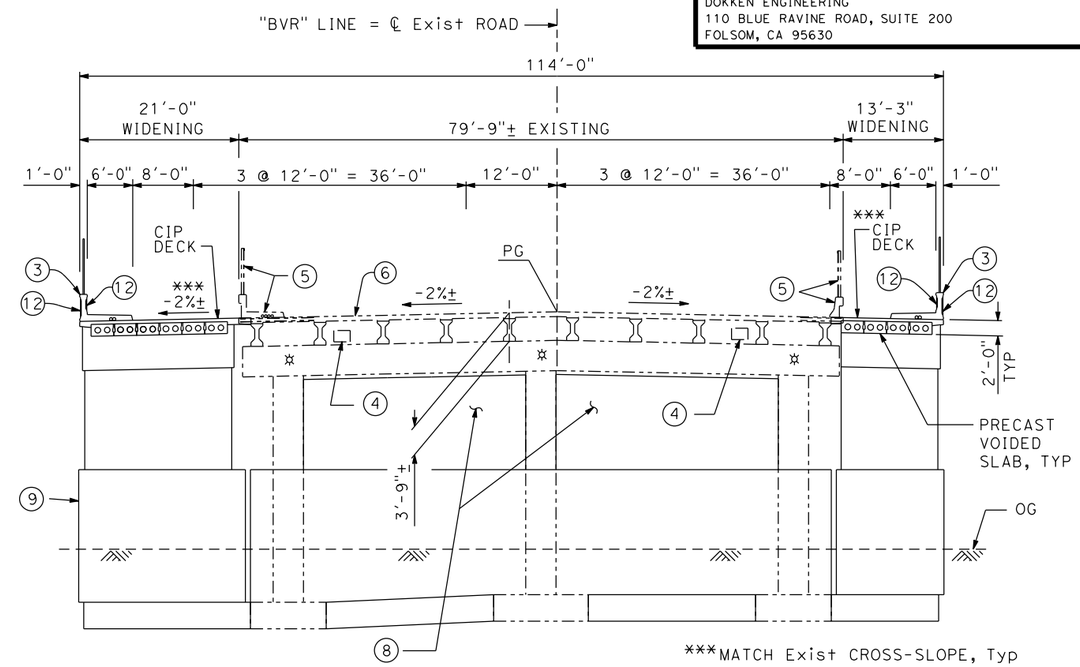

TYPICAL SECTION

1" = 10'

LEGEND:

1. STRUCTURE APPROACH TYPE N(30S)
2. STRUCTURE APPROACH TYPE R(30S)
3. CONCRETE BARRIER TYPE 732SW (MOD) W/ PICKET RAILING
4. 18" x 26" EX FUTURE UTILITY OPENING
5. REMOVE EX BARRIER, SIDEWALK AND RAILING
6. BRIDGE DECK METHACRYLATE RESIN TREATMENT, FOR LIMITS SEE "TYPICAL SECTION" SHEET
7. SLOPE PAVING, H=1.5 : V=1.0
8. INFILL WALLS
9. CRASH WALLS
10. PAINT "BEAR VALLEY ROAD OVERHEAD" & YEAR COMPLETED
11. PAINT "BRIDGE NO. 54C0547"
12. ARCHITECTURAL TREATMENT

✲ RAILWAY TRACK LIGHTING FIXTURES (NEW)
◕ DENOTES POINT OF MIN VERT CLR TO WIDENING
⊕ DENOTES POINT OF MIN VERT CLR TO EXISTING
—·—·— DENOTES Exist STRUCTURE

CURVE DATA

R = 3000.00'
△ = 10°38'58"
T = 279.61'
L = 557.60'

NOTES:

1. FOR "INDEX TO PLANS" AND "STANDARD PLANS", SEE "INDEX TO PLANS" SHEET.
2. FOR GENERAL NOTES, SEE "FOUNDATION PLAN" SHEET.

NOTE:

The contractor shall verify all controlling field dimensions before ordering or fabricating any material.

	BY	CHECKED
DESIGN	T. Osterkamp	M. Iley
DETAILS	R. Liptak	M. Iley
QUANTITIES	R. Liptak / F. Enriquez	M. Iley

LOAD & RESISTANCE FACTOR DESIGN — LIVE LOADING: HL93 W/"LOW-BOY"; PERMIT DESIGN VEHICLE
LAYOUT — BY — CHECKED
SPECIFICATIONS — BY — PLANS AND SPECS COMPARED

PREPARED FOR THE CITY OF VICTORVILLE

T. Osterkamp
PROJECT ENGINEER

BRIDGE NO. 54C0547
POST MILES

BEAR VALLEY ROAD OVERHEAD
GENERAL PLAN No. 1

DESIGN GENERAL PLAN SHEET (ENGLISH) (REV. 03/14/12)

ORIGINAL SCALE IN INCHES FOR REDUCED PLANS 0 1 2 3

UNIT:
PROJECT NUMBER & PHASE:
CONTRACT NO.:

DISREGARD PRINTS BEARING EARLIER REVISION DATES

REVISION DATES: x

SHEET 1 OF 24

FILE => J:\2007_Bear_Vly_BR_Widen\517\2007GP01.dgn

USERNAME => unknown DATE PLOTTED => 12/3/2018 TIME PLOTTED => 11:42:50 PM

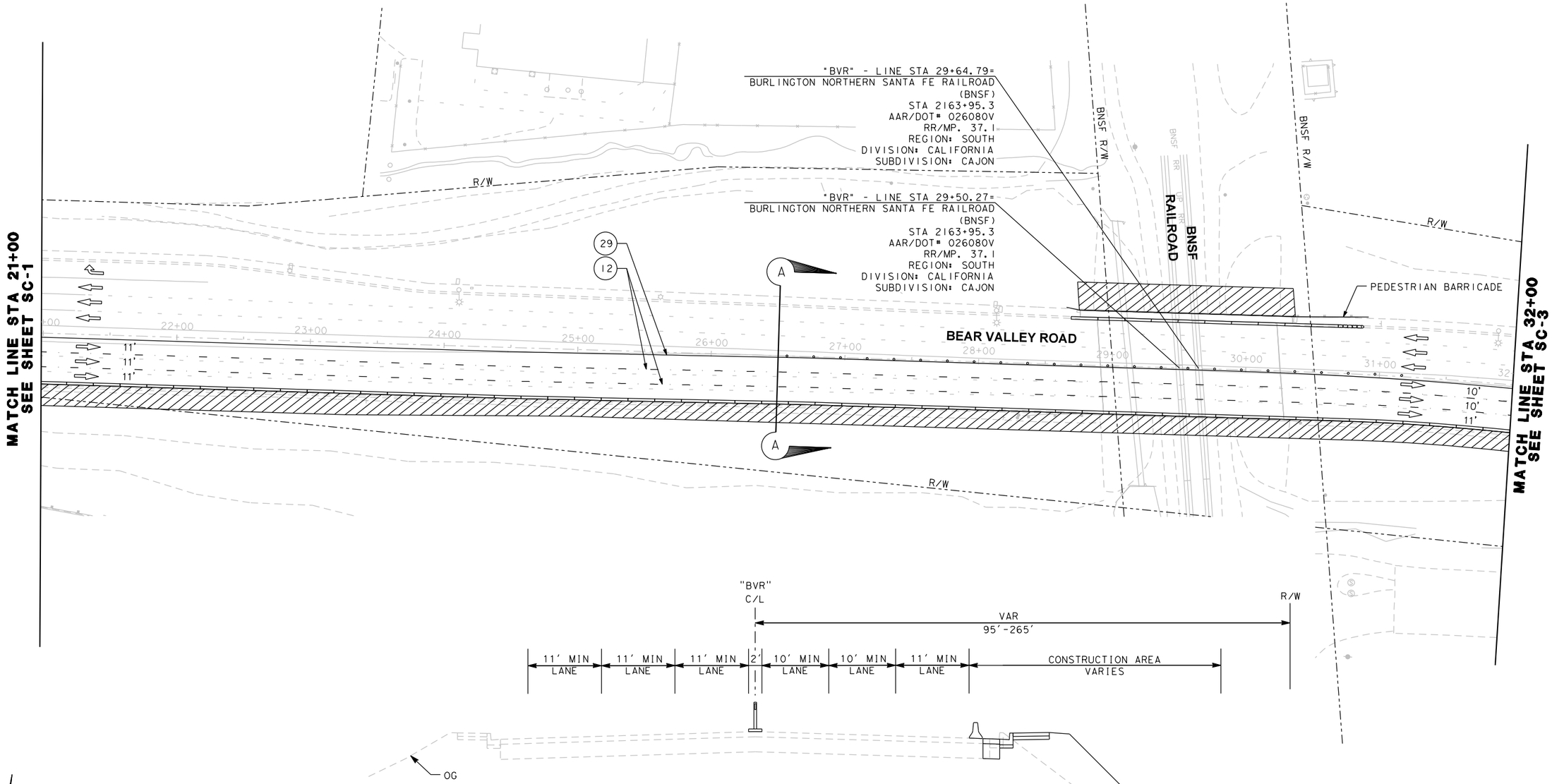

SECTION A-A
NTS

NOTES:

1. FOR STAGE CONSTRUCTION NOTES & LEGEND SEE SHEET SC-1.

PRELIMINARY
SUBJECT TO CHANGE

NO.	REVISION	BY	DATE

APPROVED BY: CITY ENGINEER _____ BRIAN GENGLER DATE: _____ R.C.E. EXP. 03-31-16

DESIGNED: KRIS KOFOED
DRAWN: BRYAN FRASER
CHECKED: JUANN RAMOS

RECORD DRAWING DATE:
SCALE HORIZ: 1" = 40'
VERT: N/A
PROJECT NO. XXXXX
CAD FILE: ...\511\2007_ma02.dgn

CITY OF VICTORVILLE
ENGINEERING DIVISION
14343 CIVIC DRIVE,
VICTORVILLE, CA 92392
(760) 955-5158

DOKKEN ENGINEERING
110 BLUE RAVINE ROAD SUITE 200, FOLSOM CA. 916-858-0642

JUANN RAMOS, PROJECT ENGINEER _____ DATE

REGISTERED PROFESSIONAL ENGINEER JUANN RAMOS No. 61931 Exp. 09/30/15 CIVIL STATE OF CALIFORNIA

BEAR VALLEY ROAD OH AT BNSF RAILROAD

STAGE CONSTRUCTION
STAGE 1

29 OF 66

SC-2

DWG. NO.

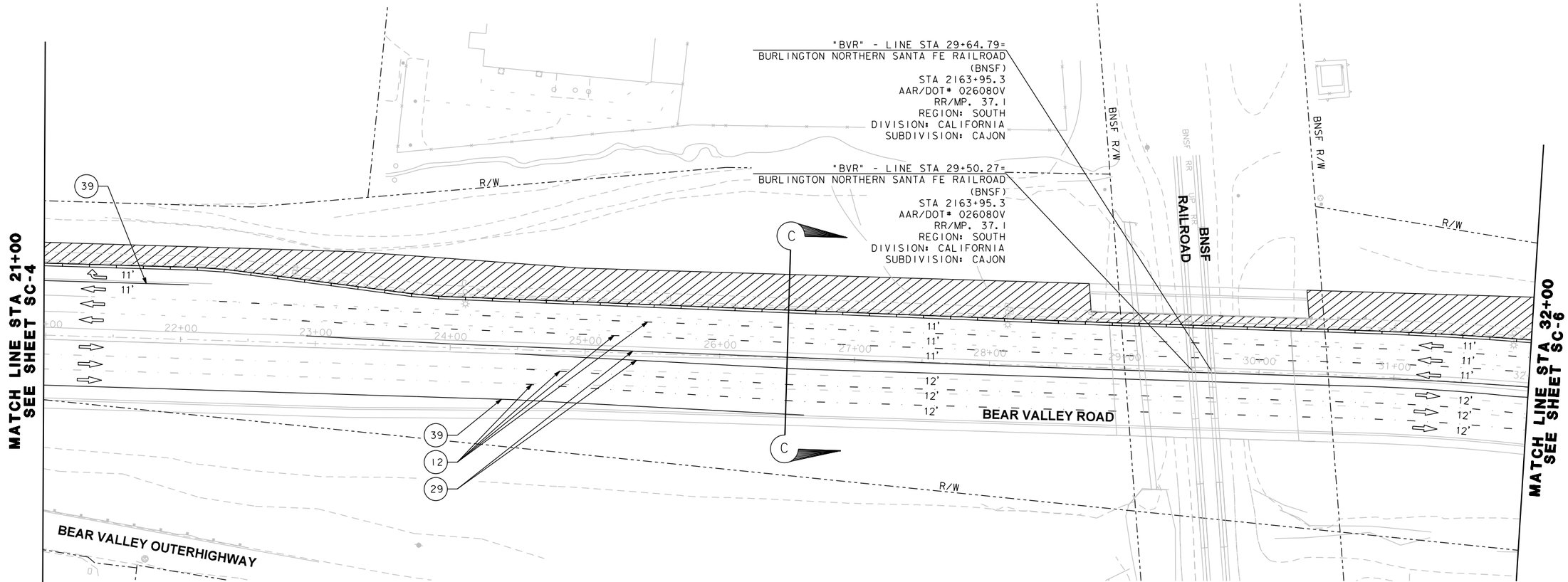

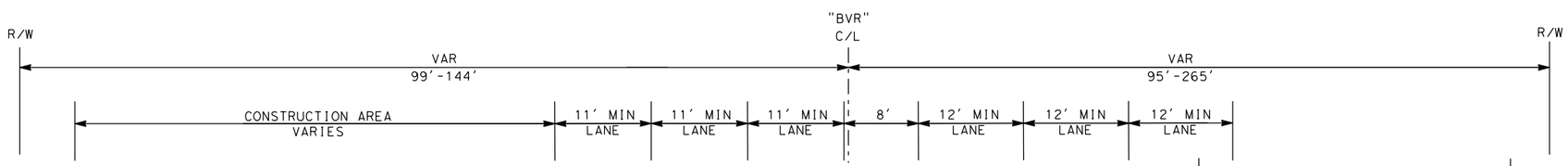

NOTES:

1. SEE SHEET SC-1 FOR NOTES AND LEGEND.

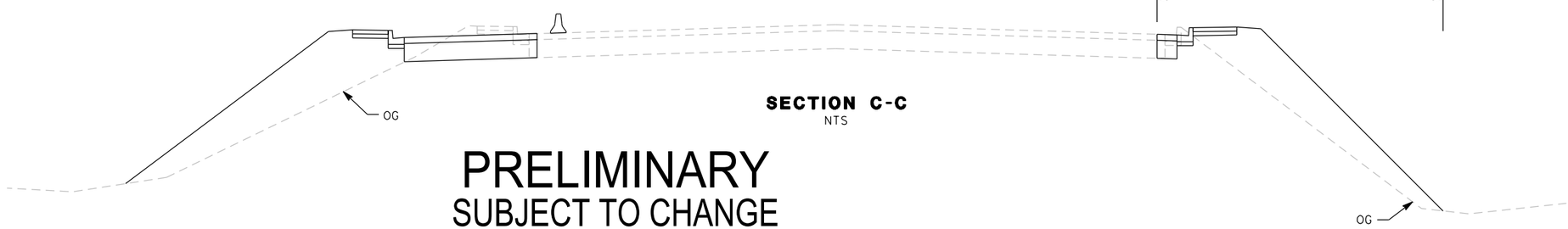

SECTION C-C
NTS

PRELIMINARY
SUBJECT TO CHANGE

NO.	REVISION	BY	DATE

APPROVED BY: CITY ENGINEER _____ BRIAN GENGLER DATE: _____ R.C.E. EXP. 03-31-16

DESIGNED: KRIS KOFOED
DRAWN: BRYAN FRASER
CHECKED: JUANN RAMOS

RECORD DRAWING DATE:
SCALE HORIZ: 1" = 40'
VERT: N/A
PROJECT NO. XXXXX
CAD FILE: ...\511\2007_ma05.dgn

CITY OF VICTORVILLE
ENGINEERING DIVISION
14343 CIVIC DRIVE,
VICTORVILLE, CA 92392
(760) 955-5158

DOKKEN ENGINEERING
110 BLUE RAVINE ROAD SUITE 200, FOLSOM CA. 916-858-0642

JUANN RAMOS, PROJECT ENGINEER _____ DATE

REGISTERED PROFESSIONAL ENGINEER JUANN RAMOS No. 61931 Exp. 09/30/15 CIVIL STATE OF CALIFORNIA

BEAR VALLEY ROAD OH AT BNSF RAILROAD

STAGE CONSTRUCTION
STAGE 2

SC-5

DWG. NO.

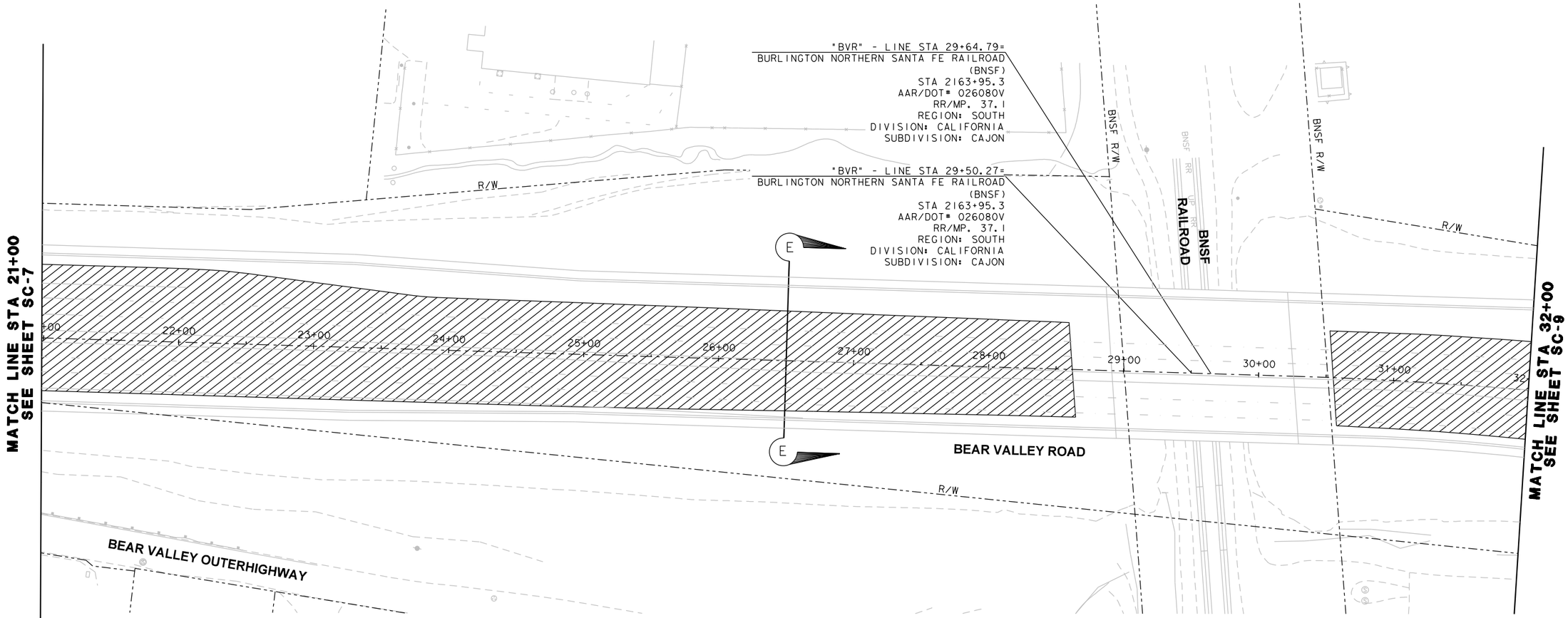

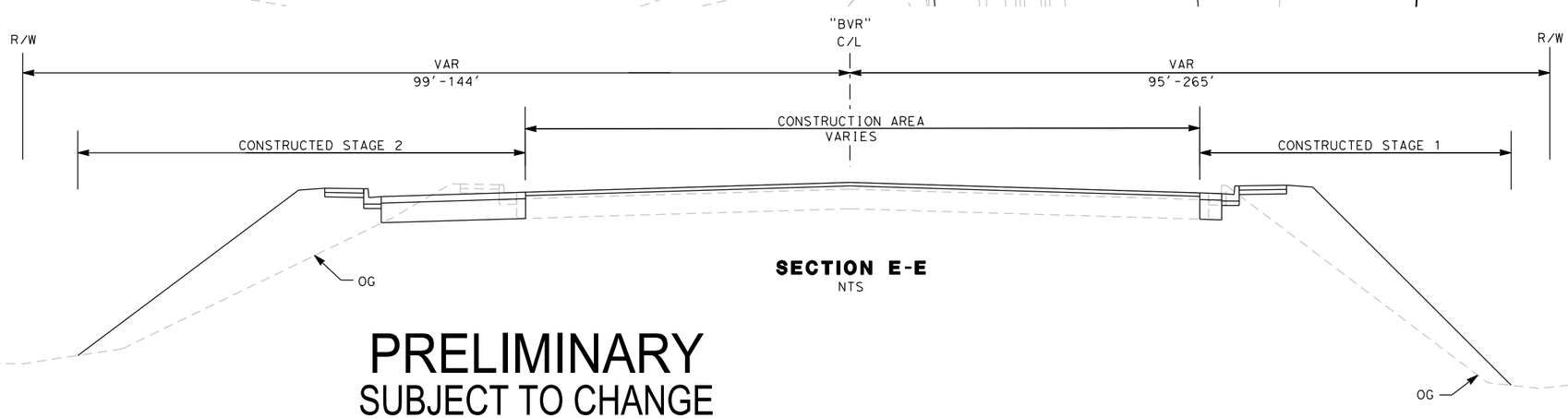

SECTION E-E
NTS

NOTES:

1. SEE SHEET SC-1 FOR NOTES AND LEGEND.

PRELIMINARY
SUBJECT TO CHANGE

NO.	REVISION	BY	DATE

APPROVED BY: CITY ENGINEER BRIAN GENGLER DATE: R.C.E. EXP: 03-31-16

DESIGNED: KRIS KOFOED
DRAWN: BRYAN FRASER
CHECKED: JUANN RAMOS

RECORD DRAWING DATE:
SCALE HORIZ: 1" = 40' VERT: N/A
PROJECT NO. XXXXX
CAD FILE: ...\511\2007_ma08.dgn

CITY OF VICTORVILLE
ENGINEERING DIVISION
14343 CIVIC DRIVE,
VICTORVILLE, CA 92392
(760) 955-5158

DOKKEN ENGINEERING
110 BLUE RAVINE ROAD SUITE 200, FOLSOM CA. 916-858-0642

JUANN RAMOS, PROJECT ENGINEER DATE

REGISTERED PROFESSIONAL ENGINEER JUANN RAMOS No. 61931 Exp. 09/30/15 CIVIL STATE OF CALIFORNIA

BEAR VALLEY ROAD OH AT BNSF RAILROAD

STAGE CONSTRUCTION
STAGE 3

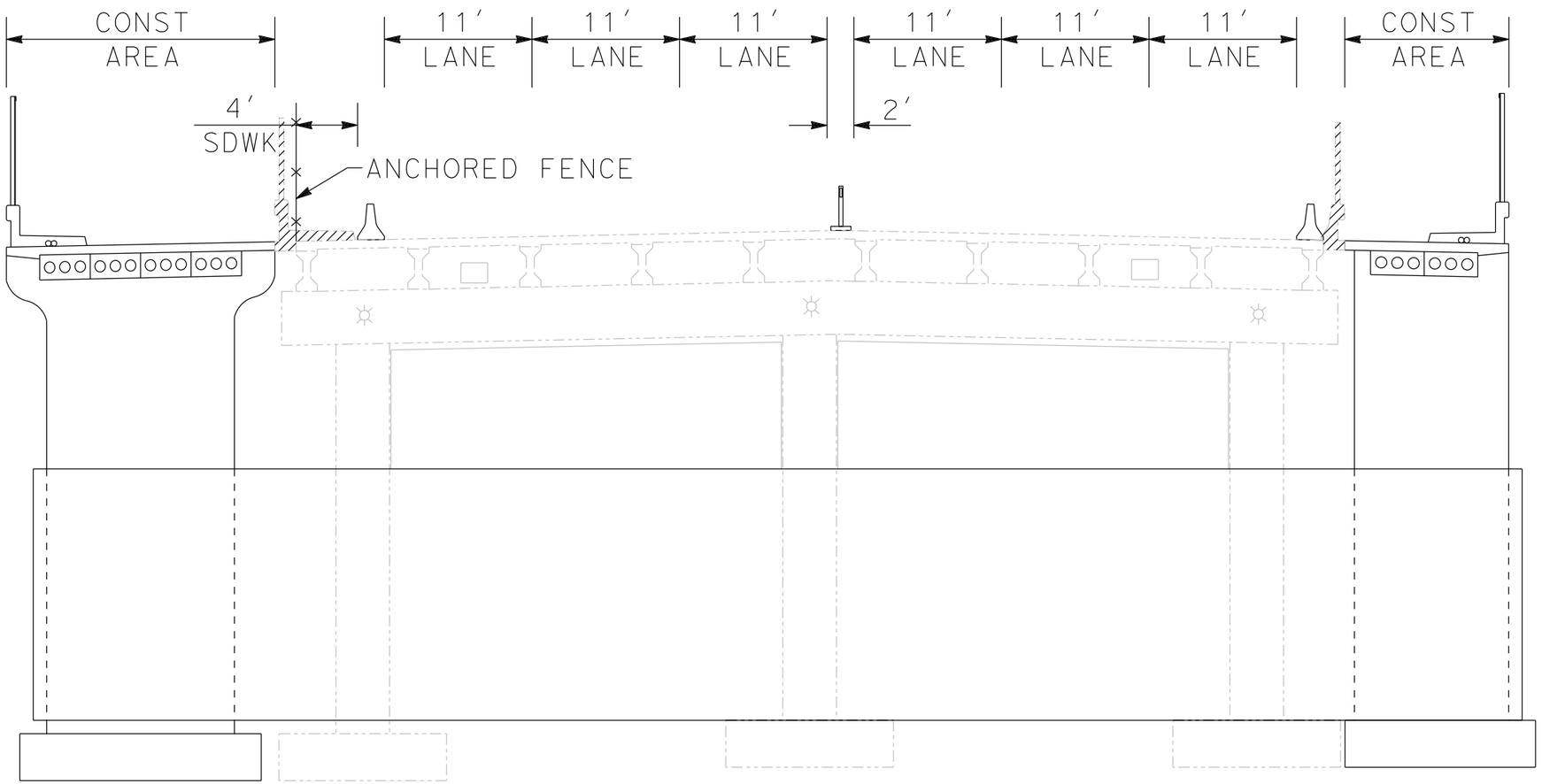

PRELIMINARY
SUBJECT TO CHANGE

NO.	REVISION	BY	DATE

APPROVED BY: CITY ENGINEER BRIAN GENGLER DATE: R.C.E. EXP. 03-31-16

DESIGNED: KRIS KOFOED

DRAWN: BRYAN FRASER

CHECKED: JUANN RAMOS

RECORD DRAWING DATE:

SCALE HORIZ: N/A VERT: N/A

PROJECT NO. XXXXX
CAD FILE: ...\GO 88\2007_Staging Typical.dgn

CITY OF VICTORVILLE
ENGINEERING DIVISION
14343 CIVIC DRIVE,
VICTORVILLE, CA 92392
(760) 955-5158

DOKKEN ENGINEERING
110 BLUE RAVINE ROAD SUITE 200, FOLSOM CA. 916-858-0642

JUANN RAMOS, PROJECT ENGINEER DATE

REGISTERED PROFESSIONAL ENGINEER JUANN RAMOS No. 61931 Exp. 09/30/15 CIVIL STATE OF CALIFORNIA

BEAR VALLEY ROAD OH AT BNSF RAILROAD

STAGE CONSTRUCTION CROSS SECTION

SCX-1

DWG. NO.

BEAR VALLEY ROAD OVERHEAD
AT BNSF RAILROAD
CITY OF VICTORVILLE
CONSTRUCTION SCHEDULE

TASK	COMPLETION DATE
Approval of PS&E	Winter 2018/2019
Complete Right of Way Acquisition	Summer 2020
Stage 1	Fall 2021
Stage 2	Summer 2022

Bear Valley Road Overhead at BNSF Railroad Project

CITY OF VICTORVILLE
SAN BERNARDINO COUNTY, CALIFORNIA

Initial Study with Mitigated Negative Declaration

Prepared by the City of Victorville

November 2014

INITIAL STUDY
ENVIRONMENTAL CHECKLIST FORM

1. **Project title:** Bear Valley Road Overhead at BNSF Railroad Project

2. **Lead agency name and address:** City of Victorville Public Works Division, 14343 Civic Drive, Victorville, CA 92392-2399.

3. **Contact person and phone number:** Brian Gengler, PE, City Engineer (760) 955-5156.

4. **Project location:** Along Bear Valley Road, from 300 feet west of Industrial Boulevard to approximately 400 feet east of Ridgecrest Road, over the Burlington Northern Santa Fe (BNSF) Railroad. See Figure 1 and 2 for Project Vicinity and Location, respectively.

5. **Project sponsor's name and address:** Brian Gengler, PE, City of Victorville Public Works Division, 14343 Civic Drive, Victorville, CA 92392-2399

6. **General plan designation:** Commercial, Industrial, and Residential

7. **Zoning:** North side of Bear Valley Road: Commercial Manufacturing (C-M), General Commercial (C-2T), Neighborhood Retail (C-1T) and Industrial (M-1). South side of Bear Valley Road: General Commercial (C2), High Density Residential (R-3), General Industrial (I2).

8. **Description of project:** The City of Victorville proposes to widen the Bear Valley Road Overhead at the Burlington Northern Santa Fe (BNSF) Railroad crossing. The proposed project consists of rehabilitating, retrofitting, and widening the existing bridge which carries Bear Valley Road over the BNSF Railroad in order to meet current AASHTO safety standards and Super Arterial standard roadway configurations set forth by the City of Victorville. See Figure 3 for Build Alternative Exhibit. The project is located along Bear Valley Road, between Industrial Boulevard and Ridgecrest Road, approximately 3.8 miles east of I-15.

   The project would widen, retrofit, and rehabilitate the existing bridge on Bear Valley Road. The bridge would be widened 32.25 feet to accommodate the construction of 5-foot-wide sidewalks, 8-foot wide shoulders, and a 12-foot wide median, required for all Super Arterials within the City of Victorville. Retrofitting the bridge would involve seismic retrofits and construction of pier protection walls (crash walls). Rehabilitation of the bridge would require sealing of the deck with methacrylate resin, patching holes, and sealing cracks in the concrete slope protection located near the abutments.

   Additional improvements would include widening the roadway approaches to accommodate the widened bridge, modification of the traffic signals at Industrial Boulevard and Ridgecrest Road, and increasing the left-turn vehicle storage capacity at the Ridgecrest Road intersection.

   The project is anticipated to take 12 months of construction. Minor partial acquisitions are anticipated. Temporary construction easements or right of entries and utility relocation will be required. The project construction limits are located from approximately 300 feet west of Industrial Boulevard to approximately 400 feet east of Ridgecrest Road. The total length of the proposed project is approximately 0.5 miles.

9. **Surrounding land uses and setting:** The proposed project area is bordered on the north by Commercial Manufacturing (C-M), General Commercial (C-2T), Neighborhood Retail (C-1T) and Industrial (M-1); and on the south by General Commercial (C2), High Density Residential (R-3), General Industrial (I2). Project activities are mostly in the right-of-way of the existing roads which are paved and disturbed. Most of the previously existing natural vegetation and wildlife habitat

has been displaced by roadways and other developed land uses. The small amount of vegetation present largely consists of disturbed desert scrub/sagebrush scrub communities and non-native ruderal vegetation on disturbed soils.

10. **Other public agency whose approval is required:**
State Water Resources Control Board
National Pollutant Discharge Elimination System (NPDES) General Permit for Discharges of Storm Water Associated with Construction Activity (Construction General Permit Order 2009-0009-DWQ).

Burlington Northern Santa Fe (BNSF) Railroad
An Encroachment Permit will be obtained as a condition of the Construction and Maintenance Agreement between the BNSF Railroad and the City of Victorville.

ENVIRONMENTAL FACTORS POTENTIALLY AFFECTED:

The environmental factors checked below would be potentially affected by this project, involving at least one impact that is a "Potentially Significant Impact" as indicated by the checklist on the following pages.

	Land Use/Planning		Biological Resources		Aesthetics
	Population/Housing		Mineral Resources		Cultural Resources
	Geology/Soils		Hazards & Hazardous Materials		Recreation
	Hydrology/Water Quality		Noise		Greenhouse Gas Emissions
	Air Quality		Public Services		Agriculture Resources
	Transportation/Traffic		Utilities/Service Systems		Mandatory Findings of Significance

DETERMINATION:

On the basis of this initial evaluation:

__ I find that the proposed project COULD NOT have significant effect on the environment, and a NEGATIVE DECLARATION will be prepared.

X I find that although the proposed project could have a significant effect on the environment, there will not be a significant effect in this case because the mitigation measures described on an attached sheet have been added to the project. A NEGATIVE DECLARATION will be prepared.

__ I find that the proposed project MAY have a significant effect on the environment, and an ENVIRONMENTAL IMPACT REPORT is required.

__ I find that the proposed project MAY have a significant effect(s) on the environment, but at least one effect 1) has been adequately analyzed in an earlier document pursuant to applicable legal standards, and 2) has been addressed by mitigation measures based on the earlier analysis as described on attached sheets, if the effect is a "potentially significant impact" or "potentially significant unless mitigated". An ENVIRONMENTAL IMPACT REPORT is required, but it must analyze only the effects that remain to be addressed.

__ I find that the proposed project WILL NOT have a significant effect on the environment, because no new potentially significant effects have been identified beyond those previously analyzed adequately in an earlier EIR, pursuant to applicable standards, and no additional mitigation measures beyond those imposed as part of that previous EIR are necessary to be imposed upon the proposed project to reduce mitigable impacts to a insignificant level. Therefore, no additional environmental documentation is necessary.

Signature: Brian Gengler Date: 11-26-2014

Brian Gengler, PE, City Engineer For: City of Victorville Public Works Department

EXHIBIT 7

Quality Assurance Program, March 31, 2018

Quality Assurance Program (QAP) Manual for Use by the City of Victorville

This manual provides quality assurance guidelines for materials used in local projects. Projects not on the NHS nor SHS shall follow these requirements.

Note: Quality Assurance Programs should be reviewed and updated every five years or more frequently.

CONTENTS

Section/Description

1.0 INTRODUCTION

2.0 STATE AND LOCAL AGENCY PROJECTS ON THE NHS

- 2.1 The National Highway System (NHS)
- 2.2 Code of Federal Regulations Title 23, Part 637 for Projects on the NHS
- 2.3 QAP Requirements for Projects on the State Highway System (SHS)
  - 2.3.1 QAP Documents
  - 2.3.2 Plans and Specifications
  - 2.3.3 Test Methods
- 2.4 Transportation Projects on the NHS, but off the SHS
  - 2.4.1 QAP Documents
  - 2.4.2 Plans and Specifications
  - 2.4.3 Test Methods
- 2.5 Caltrans Independent Assurance Program

3.0 LOCAL AGENCY TRANSPORTATION PROJECTS OFF THE NHS

- 3.1 Developing a QAP Using CT Methods
- 3.2 Recommended Guidelines for Developing a QAP

4.0 MAINTAINING ACCEPTANCE TESTING RECORDS AND MATERIALS DOCUMENTATION

- 4.1 Acceptance Testing Documentation for Local Agencies Without Materials Testing Laboratories.
- 4.2 Acceptance Testing Documentation for Local Agencies With Materials Testing Laboratories.

5.0

- 5.0 Issuing Certificates of Proficiency for Acceptance Samplers and Testers
- 5.1 Issuing Laboratory Accreditation Certificates
- 5.2 Performing Witness Tests
- 5.3 Performing Proficiency Tests (also known as Corroboration Tests, Round-Robin Tests and Split-Sample Tests)
- 5.7.1 Procedures for Tester Reinstatement
- 5.4 Procedures for Dispute Resolution
- 5.5 Maintaining Accurate Records

6.0 **FHWA/CALTRANS PROCESS REVIEWS**

APPENDICES

A Code of Federal Regulations that Govern Transportation Quality Assurance Programs - 23 CFR 637

B Proficiency Testing Through AMRL, CCRL and Caltrans Reference Sample Program

C Not Used

D Acceptance Sampling and Testing Frequencies

E Check List to Assist Local Agencies Monitor Acceptance Testing Requirements

F Construction Materials Accepted by a Certificate of Compliance

G Example of an Acceptance Testing Record

H Example of a Log Summary Sheet

J.1 Example of a Vendor's Certificate of Compliance

J.2 Certificate of Compliance for Portland Cement

K Examples of Materials Certificates/Exceptions (Signed by the Resident Engineer at the Completion of the Project)

L Check List for Local Agencies to Help Monitor Independent Assurance Requirements (not used)

M Authorization Letter (to Allow the IA Person to Provide Services for the Local Agency) (not used)

N Corroboration Chart (To Determine Proficiency Ratings) (not used)

P Example of Proficiency Testing (Between a Tester from an Accredited Laboratory and IA Person who is a Local Agency Consultant or Employee) (not used)

Q Example of a Certificate of Proficiency (Acceptance Sampler and Tester)

R Example of Test Method Questions to Help the IA Person Qualify Acceptance Samplers and Testers (Consultants and/or Employees of the Local Agency) (not used)

S Example of a Laboratory Accreditation Letter

T Example of a Witness Test Report (not used)

U Example of a Proficiency Test Report (ComparisonsBetween the Local Agency's IA Person and an Acceptance Tester for the Local Agency) (not used)

V.I Example of an IA Log Summary Sheet (not used)

V.2 Example of an IA Log Summary Sheet (Detailed) (not used)

W Example of an Annual IA Report (not used)

X Typical Questions Asked During a FHWA/Caltrans Process Review

Y Example of a QAP

This page intentionally left blank

Quality Assurance Program (QAP) Manual
for Use by Local Agencies

1.0 INTRODUCTION

A Quality Assurance Program (QAP) consists of an Acceptance Program and an Independent Assurance (IA) Program that will provide assurance that the materials and workmanship incorporated into a construction project are in conformance with the contract specifications. A QAP should be updated as needed, and at least once every five years.

When transportation projects are constructed on the National Highway System (NHS), it is required by federal regulations that each State Transportation Department (STD) has a QAP that meets federal requirements.

There are no federal QAP regulations for local agency administered Federal-aid projects off the NHS. However, to ensure that a local agency is a good steward of public funds and to ensure that the materials and workmanship incorporated in a construction project are in conformance with the contract specifications, the use of a QAP is essential. Consequently, Caltrans has included the requirement in the Local Assistance Procedures Manual that every local agency receiving funds for a Federal-aid transportation project must have a QAP. This manual provides guidelines that local agencies can use to develop a QAP for all Federal-aid projects off the State Highway System (SHS) which would include agency transportation projects off the NHS and the essential connecting roads on the NHS that are off the SHS.

2.0 STATE AND LOCAL AGENCY PROJECTS ON THE NHS

When local agencies need assistance concerning Federal-aid projects on the SHS, they are encouraged to contact their Caltrans District Local Assistance Engineer (DLAE) for guidance.

2.1 THE NATIONAL HIGHWAY SYSTEM (NHS)

In California, the NHS consists of approximately 7,500 miles of roadways on the SHS, all roadways on the Interstate System, and 120 miles of essential connecting (city or county) roads off the SHS. For the locations of California roadways on the NHS, refer to the following website: http ://www.fhwa.dot.gov/planning/nhs/index. html

2.2 CODE OF FEDERAL REGULATIONS TITLE 23, PART 637 FOR PROJECTS ON THE NHS

The Code of Federal Regulations (Title 23, Section 637.205), defines the general policy for quality assurance programs on the NHS. It reads: "Each State Transportation Department (STD) shall develop a quality assurance program which will assure that the materials and workmanship incorporated into each Federal-aid highway construction project on the NHS are in conformity with the requirements of the approved plans and specifications, including approved changes." Appendix A contains the entire text of Part 637, including the "Guide Letter of Certification by State Engineer" required for transportation projects on the NHS.

2.3 QAP REQUIREMENTS FOR PROJECTS ON THE SHS

In California, the STD (Caltrans) has determined that California test (CT) methods will be used to meet the QAP requirements.

2.3.1 QAP DOCUMENTS

These QAP documents are to be used:

- The California Department of Transportation (Caltrans) Construction Manual
- The Caltrans Independent Assurance (IA) Manual

The Caltrans Construction Manual provides the frequency of acceptance testing and outlines the acceptance testing program. The Caltrans IA Manual details the Caltrans Independent Assurance program to be followed that has been approved by FHWA.

These manuals are available at the following websites:
http://www.dot.ca.gov/hq/construc/manual2001/chapter6/chp6 1.pdf
http://www.dot.ca.gov/hq/esc/Translab/IAPMasterList/2005%20IA% 20Manual.pdf

2.3.2 PLANS AND SPECIFICATIONS

Caltrans and local agency projects on the SHS are required to use Caltrans approved plans and specifications.

2.3.3 TEST METHODS

On Caltrans and local agency projects on the SHS, CT methods are required to be followed. All CT methods are available at the following website:
http://www.dot.ca.gov/hq/esc/ctms/index.html

2.4 TRANSPORTATION PROJECTS ON THE NHS, BUT OFF THE SHS

2.4.1 QAP DOCUMENTS

For projects on the NHS but off the SHS, federal requirements mandate a QAP. The local agency may adopt the information contained in this manual for their QAP as outlined in Section 3, or follow the Caltrans QAP documents outlined in Section 2.3. The QAP in Section 3 consists of:

- An acceptance testing program
- An independent assurance program

An example of a simple QAP that can be used by a local agency is shown in Appendix Y.

2.4.2 PLANS AND SPECIFICATIONS

For local agencies with Federal-aid projects on the NHS, but off the SHS, approved plans and specifications shall be one of the following:

- Plans and specifications based upon a nationally-recognized standard (i.e., AASHTO, ASTM, etc.)
- Caltrans Standard Plans and Specifications
- Greenbook Standard Plans and Specifications

2.4.3 TEST METHODS

To receive Federal-aid funding for local agency administered projects off the SHS but on the NHS, local agencies are required to use test methods based upon a national standard or CT methods. Examples of national standards include:

- American Society for Testing and Materials (ASTM)
- American Association of State Highway and Transportation Officials (AASHTO)

It is beneficial if local agencies decide which testing standards are best suited for transportation projects in their geographical area. Local agencies should consider selecting the testing standards predominantly used by the professional groups in their geographical area. A list of testing standards is located in Appendix C.

2.5 CALTRANS INDEPENDENT ASSURANCE PROGRAM

Per the Caltrans IA Manual, IA services are provided by Caltrans IA staff for all locally-administered projects on the NHS or SHS, when CT methods are used. It should be noted that Caltrans will not perform IA services for these projects when ASTM or AASHTO standards are used to test the construction materials. When CT methods are used for local agency administered projects on the SHS or NHS, typical IA services performed by Caltrans include:

- Qualifying samplers and testers
- Accrediting laboratories
- Providing equipment calibration verification

3.0 LOCAL AGENCY TRANSPORTATION PROJECTS OFF THE NHS

For local agency Federal-aid transportation projects off the NHS, a QAP is required by the Caltrans Local Assistance Procedures Manual and is recommended by FHWA. The local agency has flexibility on how to develop and implement their QAP. It is recommended that ASTM standards, AASHTO standards, the Greenbook and/or Caltrans standards be used for the local agency's QAP.

3.1 DEVELOPING A QAP USING CT METHODS

- Caltrans QAP - Local agencies may use the Caltrans QAP documents outlined previously in Section 2.3.

- QAP Developed by the Local Agency - Chapter 16 of the Local Assistance Procedures Manual and this manual provide QAP guidelines using CT methods that will assist local agencies in developing a QAP for projects off the NHS. An example of a simple QAP that can be used by a local agency is shown in Appendix Y.
- When local agencies use CT methods, and construct one or more projects on the SHS or NHS each year, Caltrans is required to provide IA services for those local agency projects. After the samplers and testers are qualified and laboratories are accredited by Caltrans, they can then be used on other local agency projects while the accreditation and qualifications are still valid.
- If the local agency does not have a current project on the SHS or NHS, the local agency must make its own arrangements for IA services.

3.2 RECOMMENDED GUIDELINES FOR DEVELOPING A QAP

For local agencies that do not use the Caltrans QAP documents outlined previously in Section 2.3, it is recommended that they develop their own QAP that includes as a minimum:

a) Acceptance Testing - sampling and testing to determine the degree of compliance with contract requirements. This includes:

b) Testing Frequency Tables - construction sampling and acceptance testing should be outlined in a frequency table. An example of a frequency table is shown in Appendix D.

c) Qualifying testing laboratories and acceptance samplers and testers through nationally acceptable certifications.

d) A testing laboratory tied to a nationally known proficiency (or correlation) testing program or the Caltrans Reference Sample Program. Proficiency testing programs are explained in Appendix B.

e) Thorough acceptance testing documentation. This is explained in detail in Section 4. "Maintaining Acceptance Testing Records and Materials Documentation."

- Independent Assurance Program - procedures to verify that acceptance testing is being performed correctly by qualified testers and laboratories. **These include, but are not limited to only on NHS or SHS projects**:
  a) Verifying that equipment used for acceptance testing is properly calibrated and in good working condition. Records of equipment calibrations should be kept with the equipment.
  b) Witnessing sampling and testing by the acceptance tester.
  c) A written procedure for dispute resolution.
- Testing of Manufactured materials - procedures for inspecting, accepting and testing manufactured and prefabricated materials either by source inspection, job inspection, or certificate of compliance.
- QAP approval - The QAP shall be approved by the Public Works Director. A non-registered Public Works Director must delegate the approval to a staff engineer if such individual is appropriately registered. If no registered staff engineer is available, the delegation can be made to a registered consultant engineer retained by the agency. Copies of the QAP shall be kept on file for review; one copy shall be submitted to the Caltrans District Local Assistance Engineer.

MAINTAINING ACCEPTANCE TESTING RECORDS AND MATERIALS DOCUMENTATION

Local agencies shall maintain accurate acceptance testing records during the construction of their Federal-aid projects. It is the responsibility of the Resident Engineer to keep all acceptance testing records current. After the completion of each transportation project, all materials records should be stored at a convenient location, with easy access, for a minimum of three years after final project voucher.

To assist the Resident Engineer, a check list of acceptance sampling and testing items is shown in Appendix E. During an FHWA or Caltrans process review, the Resident Engineer is usually asked to present the following items:

- Local Agency Quality Assurance Program
- A log summary of acceptance tests (Appendix H)
- Individual acceptance test records (Appendix G)
- Certificates of Compliance (Appendix J.1, J.2)
- Documentation of Qualified Testing Personnel and Testing Laboratories
- Materials Certification signed at the completion of the project (Appendix K)

See Appendix F for a list of the construction materials accepted by a Certificate of Compliance. Appendices G, H, J.1, J.2 and K are examples of acceptance testing records that should be maintained by the Resident Engineer.

4.1 ACCEPTANCE TESTING DOCUMENTATION FOR LOCAL AGENCIES WITHOUT MATERIALS TESTING LABORATORIES

Many local agencies cannot justify the cost of having a fully functional materials testing laboratory to perform their acceptance tests. In these cases, a local agency's only option is to "contract-out" all sampling and testing services. These types of activities are usually contracted to a consultant within the geographical area. Some consultant laboratories may already be qualified by Caltrans or other professional organizations (i.e., AASHTO, Asphalt Institute, American Concrete Institute, National Institute of Certification of Engineering Technologies, etc.). Whenever possible, consultant laboratories with these types of qualifications should be considered.

Throughout the construction of a project, it is important that a local agency employee frequently check with the consultant to ensure that all elements of the required acceptance sampling and testing are being performed. All test records for specification compliance should be accurately compiled using examples in this manual and they should be regularly presented to a local agency employee for review and acceptance.

Prior to construction, a representative from the local agency should present the consultant with a copy of the local agency's approved QAP. It is the responsibility of the consultant to forward all test records (and final documents) to the Resident Engineer each day and to the local agency within one week of completing testing.

Should a local agency need to confirm the certifications and/or qualifications of their consultant's samplers, testers, and/or laboratory; or to verify the accuracy of the consultant's test results, the local agency should use a second qualified consultant. Differences between the construction contractor's test results and the local agency consultant's test results of the same materials, if significant, can also require sampling, and laboratory testing by a third independent qualified material's consultant.

4.2 ACCEPTANCE TESTING DOCUMENTATION FOR LOCAL AGENCIES WITH MATERIALS TESTING LABORATORIES

Local agencies that perform acceptance testing using their own facilities and trained staff should perform the sampling and testing per an approved QAP. The acceptance samplers and testers should also use documentation similar to that shown in Appendices G, H, J.1, J.2 and K. Personnel may not have dual roles; namely, being an acceptance sampler and tester and concurrently performing IA duties. This is a conflict of interest and is not allowed.

5.1 ISSUING CERTIFICATES OF PROFICIENCY FOR ACCEPTANCE SAMPLERS AND TESTERS

The consultants are on an approved pre-qualified list maintained by the finance department and the agency has the right to pick a consultant from that list and act as the agency's sampler and tester to perform work for the local agency.

The Certificate of Proficiency should include the following items:

- The printed full name of the acceptance sampler and/or tester
- The company and address of the qualified sampler and/or tester
- A list of the test methods the sampler and/or tester is qualified to perform
- The re-qualification date (month and year) for each test
- The date the certificate is issued

Prior to sampling and testing on a local agency transportation project, provide the Resident Engineer with a copy of the Certificate of Proficiency for each sampler and tester on the project. See Appendix Q for an example of a Certificate of Proficiency.

5.2 ISSUING LABORATORY ACCREDITATION CERTIFICATES

At least once during each calendar year, the IA person should review each materials testing laboratory that performs work for the local agency to verify the laboratory has the following:

- A current copy of the local agency's QAP (signed and dated by a city or county engineer).
- A current copy of all test methods used by the local agency.
- Proper test equipment (with firmly attached calibration stickers dated within 12 months of the current date), supporting calibration records and round-robin test results (from an accredited laboratory tied to AMRL, CCRL or Caltrans' RSP).
- Current Certificates of Proficiency for all samplers and/or testers expected to be on the project.

The Laboratory Accreditation Certificate should include the printed name and address of the laboratory, the accreditation date, a list of the tests the laboratory is accredited to perform and the full name of the IA person, and a statement that all of the above requirements have been met. A certificate of compliance from the laboratory showing certification from a nationally accepted organization will be acceptable.

See Appendix S for an example of a Laboratory Accreditation Certificate for a materials testing laboratory.

5.8 MAINTAINING ACCURATE RECORDS

It is the responsibility of the local agency's Resident Engineer to create, and maintain accurate records for all acceptance materials testing performed on local agency construction projects. Per CFR Title 49, Section 18.42, a local agency using federal funds for a transportation project must maintain pertinent construction records for three years subsequent to final project voucher reimbursement or through the period of litigation, whichever is later. A complete set of Resident Engineer records should include the following:

- A log summary of the acceptance tests taken on the project
- Copies of all tester qualification and lab certifications
- All acceptance tests taken on the project
- Copies of Certificates of Compliance
- Records of pre-manufactured materials (collection of release tags)
- Materials certificate (signed by the Resident Engineer at the completion of the project)

- A copy of the approved QAP with the date of approval

(See Appendices G, H, J.1, J.2, K, P, Q, S, T, U, V.I, V.2, and W for examples of these records.)

FHWA/CALTRANS PROCESS REVIEWS

FHWA and/or Caltrans process review teams randomly visit California local agencies to examine their materials records on selected Federal-aid construction projects. During a FHWA or Caltrans process review, the Resident Engineer may only have five to seven days to retrieve all their project files and review the materials testing elements on their project. Under these conditions, it is imperative that all materials records for each construction project are accurate, well organized and stored in an easily retrievable place.

The process review team may typically ask several questions pertaining to the quality assurance process. They are especially interested in examining the written documentation collected during the construction of the project, to verify that proper amounts of sampling and testing were performed in accordance with the local agency's QAP and determine if all failed tests were resolved.

From project plans, quantities of materials used, and the local agency's QAP frequency tables, it is relatively easy to determine the minimum number of acceptance tests that are required on the project. In the past, California local agencies have not always had the proper number of acceptance tests and other required items in their project files. It should be noted that the role of the review team is to examine all areas of the local agency's QAP and observe whether or not the local agency has done what is required. Their main objectives are to assist state and local agencies with their control of materials and encourage them to fully document all required materials records as noted in their QAP. This manual is intended to help local agencies fulfill material testing and record requirements on their Federal-aid projects and to help ensure both state and federal compliance with future Caltrans or FHWA process reviews. See Appendix X for commonly asked questions during a Caltrans or FHWA process review.

Appendix A - Code of Federal Regulations that Govern Transportation Quality Assurance Programs - 23 CFR 637

- Chapter 1 - Federal Highway Administration, Department of Transportation
- Title 23 Code of Federal Regulations (CFR) - Highways
- Part 637 - Construction Inspection and Approval

Caltrans Editorial Comment: Currently, there are no Code of Federal Regulations (CFR) pertaining to Quality Assurance Program requirements for local agency Federal-aid projects off the NHS. However, for local agencies that have projects on the NHS, the provisions of 23 CFR 637 which includes "Subpart B - Quality Assurance Procedures for Construction" apply.

Title 23 CFR 637 can be found at:

http://www.access.gpo.gov/nara/cfr/waisidx 01/23cfr63701.html

The following are the specific requirements set forth in "Subpart B - Quality Assurance Procedures for Construction" **for projects on the NHS** (not all Sections are shown):

Section 637.201 - Purpose

To prescribe policies, procedures, and guidelines to assure the quality of materials and construction in all Federal-aid highway projects on the National Highway System.

Section 637.207 - Quality Assurance Program

(a) Each State Transportation Department's (STD)* quality assurance program shall provide for an acceptance program and an independent assurance (IA) program consisting of the following:

*(Caltrans Editorial Comment: Local agencies administering construction contracts on the NHS must follow the requirements for the STD which is Caltrans in California.)

(1) Acceptance program

(i) Each STD's acceptance program shall consist of the following:

(A) Frequency schedules for verification sampling and testing personnel responsible for the program and allow adaptation to specific project conditions and needs.

(B) Identification of the specific location in the construction or production operation at which verification sampling and testing is to be accomplished.

(C) Identification of the specific attributes to be inspected which reflect the quality of the finished product.

(ii) Quality control sampling and testing results may be used as part of the acceptance decision provided that:

(A) The sampling and testing has been performed by qualified laboratories and qualified sampling and testing personnel.

(B) The quality of the material has been validated by the verification sampling and testing. The verification testing shall be performed on samples that are taken independently of the quality control samples.

(C) The quality control sampling and testing is evaluated by an IA program.

(iii) If the results from the quality control sampling and testing are used in the acceptance program, the STD shall establish a dispute resolution system. The dispute resolution system shall address the resolution of discrepancies occurring between the verification sampling and testing and the quality control sampling and testing. The dispute resolution system may be administered entirely with the STD.

(iv) In the case of a design-build project on the NHS, warranties may be used where appropriate. See 23 CFR 635.413 (e) for specific requirements.

(2) The IA program shall evaluate the qualified sampling and testing personnel and their testing equipment. The program shall cover sampling procedures, testing procedures, and testing equipment. Each IA program shall include a schedule of frequency for IA evaluation. The schedule may be established based on either a project basis or a system basis. The frequency can be based on either a unit of production or on a unit of time.

(i) The testing equipment shall be evaluated by using one or more of the following: Calibration checks, split samples or proficiency samples.

(ii) Testing personnel shall be evaluated by observations and split samples or proficiency- samples.

(iii) A prompt comparison and documentation shall be made of test results obtained by the tester being evaluated and IA tester. The STD shall develop guidelines including tolerance limits for the comparison of test results.

(iv) If the STD uses the system approach to the IA program, the STD shall provide an annual report to the FHWA summarizing the results of the IA program.

(3) The preparation of a materials certification conforming in substance to Appendix A of this subpart, shall be submitted to the FHWA Division Administrator for each construction project which is subject to FHWA construction oversight activities.

(b) In the case of a design-build project funded under Title 23, U.S Code, the STD's quality assurance program should consider the specific contractual needs of the design-build project. All provisions of paragraph (a) of this section are applicable to design build projects. In addition, the quality assurance program may include the following:

(1) Reliance on a combination of contractual provisions and acceptance methods.

(2) Reliance on quality control sampling and testing as part of the acceptance decision, provided that adequate verification of the design-builder's quality control sampling and testing is performed to ensure that the design-builder is providing the quality of materials and construction required by the contract documents.

(3) Contractual provisions which require the operation of the completion facility for a specific time period.

Appendix A (continued)

Section 637.209 - Laboratory and sampling and testing personnel qualifications

(a) Laboratories

(1) After June 29,2000, all contractor, vendor, and STD testing used in the acceptance decision shall be performed by qualified laboratories.

(2) After June 30, 1997, each STD shall have its central laboratory accredited by the AASHTO Accreditation Program or a comparable laboratory accreditation program approved by the FHWA.

(3) After June 29, 2000, any non-STD designated laboratory which performs IA sampling and testing shall be accredited in the testing to be performed by the AASHTO Accreditation Program or a comparable laboratory accreditation program approved by the FHWA.

(4) After June 29, 2000, any non-STD laboratory that is used in dispute resolution sampling and testing shall be accredited in the testing to be performed by the AASHTO Accreditation Program or a comparable laboratory accreditation program approved by the FHWA.

(5) After September 24, 2009, laboratories that perform crash testing for acceptance of roadside hardware by the FHWA shall be accredited by a laboratory accreditation body that is recognized by the National Cooperation for Laboratory Accreditation (NACLA), is a signatory to the Asia Pacific Laboratory Accreditation Cooperation (APLAC) Mutual Recognition Arrangement (MRA), is a signatory to the International Laboratory Accreditation Cooperation (ILAX) Mutual Recognition Arrangement (MRA), or another accreditation body acceptable to FHWA.

(b) Sampling and testing personnel. After June 29, 2000, all sampling and testing data to be used in the acceptance decision or the IA program, shall be executed by qualified sampling and testing personnel.

(c) Conflict of interest. In order to avoid an appearance of a conflict of interest, any qualified non-STD laboratory shall perform only one of the following types of testing on the same project:
Verification testing, quality control testing, IA testing or dispute resolution testing.

Projects not on the NHS or SHS shall not utilize IA services.

Appendix A (continued)

Appendix A to Subpart B of Part 637 -
Guide Letter of Certification by State Engineer

Date _____
Project No. _____

This is to certify that:
The results of the tests used in the acceptance program indicate that the materials incorporated in the construction work, and the construction operations controlled by sampling and testing, were in conformity with the approved plans and specifications. (The following sentence should be added if the IA testing frequencies are based on project quantities. All independent assurance samples and tests are within tolerance limits of the samples and testes that used in the acceptance program.) Exceptions to the plans and specifications are explained on the back hereof (or on attached sheet).

Director of STD Laboratory or other appropriate STD Official.

Appendix B - Proficiency Testing Through AMRL, CCRL and Caltrans Reference Sample Program

Whenever possible, local agencies should perform annual proficiency tests (also known as round-robin tests and split-sample tests) with one or more laboratories to ensure that the laboratories are obtaining consistent test results. Three organizations that perform proficiency tests and utilize statistical methods to evaluate their test results are: the AASHTO Materials Reference Laboratory (AMRL), Cement and Concrete Reference Laboratory (CCRL) and Caltrans Reference Samples Program (RSP).

It should be noted that AMRL and CCRL use ASTM and AASHTO standards when evaluating their proficiency samples. Caltrans uses only CT methods to evaluate proficiency samples in their RSP. California local agencies that use Caltrans plans and specifications are encouraged to have their city, county or consultant's laboratories regularly participate in Caltrans' RSP.

Each program tests the following materials:

AASHTO Materials Reference Laboratory (AMRL)

- Soil
- Bituminous Asphalt Concrete (or Hot Mix Asphalt)
- Emulsified Asphalt
- Bituminous Concrete Design
- Bituminous Concrete Analysis
- Coarse Aggregate
- Fine Aggregate

Cement and Concrete Reference Laboratory (CCRL)

Portland Cement Concrete (or Hydraulic Cement Concrete)
Mineral Admixtures (Types C, F and N)
Portland Cement (Chemical Tests)
Portland Cement (Physical Tests)

Caltrans Reference Samples Program (RSP)

- Soils
- Asphalt Concrete
- Fine Aggregate
- Coarse Aggregate

Note: AMRL and CCRL prepare thousands of representative samples each year for correlations testing. These samples are then shipped to materials testing laboratories throughout the world. The various material types are noted above. When a laboratory determines its final results, according to specified ASTM and/or AASHTO standards, the results are mailed to AMRL (100 Bureau Drive, Stop 8619, Building 202, Room 211, Gaithersburg, Maryland, 0899-8619); or CCRL (100 Bureau Drive, Stop 8618, Building 220, Room A63, Gaithersburg, Maryland, 0899-8618); for data analysis. Each laboratory is then mailed an individual rating (from 0 to 5) for the testing standards that were performed by the laboratory. When all results are finalized, CCRL mails their finding to AMRL. For laboratories with test ratings of 3 (or greater), AMRL mails certificates to these laboratories, stating they are an accredited laboratory by AMRL and/or CCRL. Caltrans RSP is conducted at 5900 Folsom Blvd, Sacramento, CA 95825.

Appendix D - Acceptance Sampling and Testing Frequencies

Portland Cement Concrete (Hydraulic Cement Concrete)- Continue

Materials to be Sampled or Tested	Procedure	Sample Size	Sampling/Testing Frequency	Typical Test Methods	Description of Comments
Air Entraining Admixtures (Sampling & Testing)		If liquid, take a 1-qt. sample using a clean, lined can or plastic bottle. If powder, take a 2.5 lb. sample.	If the product is accepted based on a Certificate of Compliance, No testing is required.	ASTM C233	If testing appears warranted, test for sulfates and chlorides. Admixtures with sulfates and chlorides greater than 1% should not be used.
Water Reducers or Set Retarders (Sampling & Testing)		If liquid, take a 1-qt. sample using a clean plastic can. If powder, take a 2.5 lb. sample.	If the product is accepted based on a Certificate of Compliance, No testing is required.	ASTM C494	If testing appears warranted, test for sulfates and chlorides. Admixtures with sulfates and chlorides greater than 1% should not be used.
Freshly mixed Concrete (Sampling)	Sampling	Approx. 150 lb/ (or 1 cu ft.) near mixer discharge.	When tests are required, take at least one sample for each 100 cu. yd. of PCC.	ASTM C172 C685 CT 539	This describes a method to sample freshly-mixed concrete.
Freshly mixed Concrete (Testing)	Slump (cone)	Approx. 150 lb/ (or 1 cu ft.) near mixer discharge.	On projects with 100 cu. yd., or more, test at least one sample per day.	ASTM C143	This test determines the slump of the freshly-mixed concrete.
Freshly mixed Concrete (Testing)	Slump (Ball)	Approx. 150 lb/ (or 1 cu ft.) near mixer discharge.	On projects with 100 cu. yd., or more, test at least one sample per day.	ASTM C360 CT 533	This test determines the ball penetration of the freshly-mixed concrete.
Freshly mixed Concrete (Testing)	% Air (pressure)	Approx. 150 lb/ (or 1 cu ft.) near mixer discharge.	On projects with 100 cu. yd., or more, test at least one sample per day.	ASTM C231 CT 504	This test determines the air content of freshly-mixed concrete (pressure method).
Freshly mixed Concrete (Testing)	Unit Weight	Approx. 150 lb/ (or 1 cu ft.) near mixer discharge.	On projects with 100 cu. yd., or more, test at least one sample per day.	ASTM C138 CT 518	This test determines the unit weight of freshly-mixed concrete.

Appendix D (continued)

Portland Cement Concrete (Hydraulic Cement Concrete)- Continue

Materials to be Sampled or Tested	Procedure	Sample Size	Sampling/Testing Frequency	Typical Test Methods	Description of Comments
Freshly-mixed Concrete (Testing)	f'c	Approx. 150 lb/ (or 1 cu ft.) near mixer discharge.	Fabricate at least two concrete cylinders per day when required. Test for compressive strength at least once for each 100 to 500 cu. Yd of structural concrete.	ASTM C39 CT 521	This test is used to fabricate 6" x 12" concrete cylinders. Compressive strengths are determined when needed.

Soils and Aggregates

Soils and Aggregates (Testing)	Gradation	One 50-Ib sample	Take one sample for every 500 to 1,000 tons of material imported.	ASTM C136 CT 202	This test determines the gradation of soils and aggregates by sieve analysis.
Soils and Aggregates (Testing)	SE	One 50-Ib sample	Take one sample for every 500 to 1,000 tons of material imported.	ASTM D2419 CT 217	This test determines the Sand Equivalent of soils and aggregates.
Soils and Aggregates (Testing)	R-value	One 50-Ib sample	Take one sample for every 500 to 1,000 tons of material imported.	ASTM D2844 CT 301	This test determines the Resistance Valve (R-) and expansion pressure of compacted materials.
Soils and Aggregates (Testing)	Dr	One random location for every 2,500 sq.ft.	Take one test for every 2,500 sq. ft. of surface compacted. Test at least one sample at per project.	ASTM D2922 CT 231	This test determines field densities using the nuclear gage.
Soils and Aggregates (Testing)	W%	One random location for every 2,500 sq.ft.	Take one test for every 2,500 sq. ft. of surface compacted. Test at least one sample at per project.	ASTM D3017 CT 231	This test determines the water content using nuclear gage.

Appendix D (continued)

Hot Mix Asphalt (Asphalt Concrete) - Concrete

Materials to be Sampled or Tested	Procedure	Sample Size	Sampling/Testing Frequency	Typical Test Methods	Description of Comments
Asphalt Concrete (Sampling)	AC (Sampling)	Obtain one 30-lb sample each day of production.	Obtain one sample at the site for 1,000 tons of asphalt concrete placed.	ASTM D75, D140, D979 CT125	This test describes the procedure to sample the asphalt concrete.
Asphalt Concrete (Testing)	Marshall	One 30 lb sample	Obtain one sample for every 1,000 tons of asphalt concrete.	ASTM D1559	This test determines the resistance to plastic flow of prepared mixes as determined by the Marshall Method.
Asphalt Concrete (Testing)	AC Gradation	One 30 lb sample	Obtain one sample for every 1,000 tons of asphalt concrete.	ASTM C117, D2172 (use Method B)	This test determines the screen analysis of aggregates recovered from asphalt materials.
Geotextile Fabric (Placed under the Asphalt Concrete)	Geo-textile strength	One 12 ft. X 3 ft. sample	Obtain one sample per job.	ASTM D4632	This test determines the weight per sq. yd. and grabs strength of geotextile fabrics.
Asphalt Concrete (Testing)	Relative Density (Nuclear)	One random location for every 2,500 sq.ft.	Take one test for every 2,500 sq. ft. of surface compacted. Test at least one sample per project.	ASTM D2950 CT 375	This test determines the nuclear field density of in-place asphalt concrete.
Slurry Seals (Sample)	Slurry (sample)	One 0.5 gal. sample in a clean, dry plastic container.	Obtain one sample per truck	ASTM D979 CT 125	This test describes the procedure for sampling the slurry seal.
Aggregate for Slurry Seals (Testing)	Sand Equivalent (slurry)	One 30 lb sample	Obtain at least one sample per project from the belt, hopper or stockpile and test for Sand Equivalent.	ASTM D2419 CT 217	This test determines Sand Equivalent of aggregates.

Appendix D (continued)

Slurry Seals

Materials to be Sampled or Tested	Procedure	Sample Size	Sampling/Testing Frequency	Typical Test Methods	Description of Comments
Aggregate for Slurry (Testing)		One 30 lb sample	Obtain at least one sample per project from the belt, hopper or stockpile and test for Sieve Analysis of fine sand.	ASTM C117	This test determines the sieve analysis of fine sand (gradation of materials finer than No. 200 sieve by washing grading).
Slurry Seals (Testing)		One 0.5 gal. sample in a clean, dry plastic container.	Test at least one sample per project and test for Abrasion.	ASTM D3910	This test determines the Wet Tract Abrasion Test (2) (WTAT).

Steel

Materials to be Sampled or Tested	Procedure	Sample Size	Sampling/Testing Frequency	Typical Test Methods	Description of Comments
Steel Strand (Testing)		Sample strand at various sizes.	This item may be accepted using a Certificate of Compliance. Sample and test at least two steel strands per job when a Certificate of Compliance is not used.	ASTM A370, A416, E328	This test determines the tensile strength of uncoated seven-wire stress-relieved strand for pre-stressed concrete.
Steel Rebar (Testing)		Sample rebar at various sizes.	This item may be accepted using a Certificate of Compliance. Sample and test at least two steel rebar per job when a Certificate of Compliance is not used.	ASTM A615, A370	This test determines the steel reinforcement bar tensile strength and bend capability.

Appendix E - Check List to Assist Local Agencies Monitor Acceptance Testing Requirements

No.	Item	Yes, No or N/A
1	Was the Resident Engineer able to present an approved QAP, when requested to do so?	
2	Were there Certificates of Compliance in the project files for materials that were accepted (without testing) on the project?	
3	Did the type and number of acceptance tests taken on the project match (or exceed) the minimum type and number required in the frequency tables of the approved QAP?	
4	Did all acceptance samplers and testers (local agency employees and/or consultants) have valid Certificates of Proficiency for the duration of the project?	
5	Were there calibration stickers firmly affixed to all the test equipment used by the acceptance samplers and testers on the project?	
6	Were the calibration dates on the stickers (affixed to the test equipment) within 12 months of the current date?	
7	Did the Resident Engineer have a log summary sheet of all acceptance tests performed on the project?	
8	If plant inspection and/or source inspection were performed on this project, were there test records to show that testing was performed for the items used?	
9	Did any acceptance samplers and testers get decertified for any test during the construction of the project?	
10	Did the Resident Engineer provide written approval of the PCC mix designs used on the project?	
11	Did the Resident Engineer provide written approval of the hot mix asphalt designs used on the project?	
12	If materials did not meet minimum specifications but were still used on the project, did the Resident Engineer fully document all testing and attach justifications for use and cost reduction information to the Materials Certificate?	
13	Did the Resident Engineer sign and date the Materials Certificate after the project was completed?	

Note (for No. 3 above):
Assume that a concrete structure was 50% complete and approximately 1000 cubic yards of PCC will be used on the project. If the testing frequency in the local agency's QAP states that two concrete cylinders will be tested for compressive strength every 500 cubic yards, did the Resident Engineer have at least two compressive- strength tests in the project file? Likewise if the structure was 100% complete, were there four compressive-strength tests in the project file?

Printed Name of the Local Agency:_____

Printed Name of the Resident Engineer: _____

Printed Name of the Reviewer: _____

Date of Review:

Appendix F - Construction Materials Accepted by a Certificate of Compliance *

Soil Amendment
Fiber
Mulch
Stabilizing Emulsion Plastic Pipe Lime
Reinforcing Steel
Structural Timber and Lumber
Treated Timber and Lumber
Timber and Lumber
Culvert and Drainage Pipe Joints
Reinforced Concrete Pipe
Corrugated Steel Pipe and Corrugated Steel Pipe Arches Structural Metal Plate Pipe Arches and Pipe Arches Perforated Steel Pipe
Polyvinyl Chloride Pipe and Polyethylene Tubing
Steel Entrance Tapers, Pipe Down drains, Reducers, Coupling Bands and Slip Joints
Aluminum Pipe (Entrance Tapers, Arches, Pipe Down drains, Reducers, Coupling Bands and Slip Joints)
Metal Target Plates
Electrical Conductors
Portland Cement
Minor Concrete
Waterstop

* If Caltrans Standard Specifications May 2006 is part of contract specifications.

Note: Usually these items are inspected at the site of manufacture or fabrication and reinspected after delivery to the job site.

Appendix G - Example of an Acceptance Testing Record

Material Tested: Fresh Concrete

Location of Test: Station 100 + 50 (50 feet right of centerline)

Type of Work: Retaining Wall Foundation .

Date	Test Number	Description of Test	Test Results	Specification
07/07/07	CT 504	Air Content	4.2%	4.0% Minimum
07/07/07	CT 533	Ball Penetration	1.5 in.	0.5 to 2.0 in.

Printed Name of Acceptance Tester: Bill Johnson .

Company: ABC Engineering Company .(Middletown, CA)

Date: 07/07/07 .

Note: An air content test was recommended because the foundation elevation was over 5,000 feet.

Appendix H - Example of a Log Summary Sheet

Subgrade Materials

Date	CT	Station	Elevation	Test Results	Minimum Spec.	Passed or Failed	Action Taken
5/15/07	231	1+ 00 (30' L)	99.00	93	90 or greater	Passed	N/A
5/16/07	231	1+ 50 (20' R)	100.50	94	90 or greater	Passed	N/A
5/17/07	231	2+ 25 (25' R)	101.00	96	90 or greater	Passed	N/A
5/18/07	231	1+ 50 (30' L)	101.50	95	95 or greater	Passed	N/A
5/19/07	231	2+ 50 (20' L)	102.00	92 *	95 or greater	Failed	See Note 1
5/19/07	231	2+ 50 (20' L)	102.00	95	95 or greater	Passed	N/A

CT 231 = Compaction (Nuclear Gage)

* Note 1: The Contractor used a water tank to dampen the soil surface at the failed subgrade location. Using a sheep's foot compactor, he reworked the subgrade (making at least 10 passes) from Station 2+ 00 to Station 3+ 00. After approximately 30 minutes, another compaction test was taken. This time the relative compaction was 95.

Aggregates and Base Materials

Date	CT	Station	Elevation	Test Results	Minimum Spec.	Passed or Failed	Action Taken
6/20/07	202	1+ 00 (10' R)	102.50	See data sheet	See data sheet	Passed	N/A
6/20/07	202	2+ 00 (20' L)	102.50	See data sheet	See data sheet	Passed	N/A
6/22/07	217	1+ 00 (10' R)	102.50	75	25 or greater	Passed	N/A
6/22/07	217	2+ 00 (20' L)	102.50	83	25 or greater	Passed	N/A
6/20/07	227	1+ 00 (20' R)	102.50	86	71 or greater	Passed	N/A
6/20/07	227	1+ 50 (20' L)	102.50	85	71 or greater	Passed	N/A
6/24/07	231	2+ 00 (20' R)	102.50	98	95 or greater	Passed	N/A
6/24/07	231	2+ 50 (20' L)	102.50	97	95 or greater	Passed	N/A

CT 202 = Sieve Analysis, CT 217 = Sand Equivalent, CT 227 = Cleanness Value, CT 231 = Compaction (Nuclear Gage)

Appendix H (continued)

Hot Mix Asphalt

Date	CT	Station	Elevation	Test Results	Minimum Spec.	Passed or Failed	Action Taken
7/10/07	339	1+ 00 (10' R)	103.00	0.08 gal/ sq yd	0.05 -0.10 gal/sq yd	Passed	N/A
7/10/07	366	2+ 00 (20' L)	103.00	32	>23	Passed	N/A
7/10/07	366	1+ 00 (10' R)	103.00	41	>23	Passed	N/A
7/10/07	375	2+ 00 (20' L)	103.00	94	RC = 93 to 97	Passed	N/A
7/15/07	375	1+ 00 (20' R)	103.00	96	RC = 93 to 97	Passed	N/A
7/15/07	375	1+ 50 (20' L)	103.00	95	RC = 93 to 97	Passed	N/A

CT 339 = Distributor Spread Rate, CT 366 = Stabilometer Value CT 375 = In-Place Density & Relative Compaction

Portland Cement Concrete

Date	CT	Station	Elevation	Test Results	Minimum Spec.	Passed or Failed	Action Taken
9/25/07	504	10 + 50 (50' R)	102.50	6.5%	>6.0%	Passed	N/A
9/25/07	533	12 + 50 (50' R)	102.50	1.5"	<2"	Passed	N/A
9/25/07	518	11 + 50 (50' R)	102.50	151 lb/cu ft	> 145 lb/cu ft	Passed	N/A
9/25/07	521	10 + 50 (50' R)	102.50	28 day = 4200 psi	>3800 psi	Passed	N/A
9/28/07	521	11 + 50 (50' R)	102.50	28 day = 4290 psi	>3800 psi	Passed	N/A
9/30/07	521	12 + 50 (50' R)	102.50	28 day = 4160 psi	>3800 psi	Passed	N/A

CT 504 = Air Content, CT 518 = Unit Weight, CT 521 = Compressive Strength, CT 533 = Ball Penetration

Appendix J.1 - Example of a Vendor's Certificate of Compliance

No. 583408

STATE OF CALIFORNIA - DEPARTMENT OF TRANSPORTATION
VENDOR'S CERTIFICATE OF COMPLIANCE
MR-0543 (REV. 5/93) #CT-7541-6020-2

☐ PRECAST CONCRETE PRODUCTS OR ☒ SOUNDWALL

TO: BILL SYNDER

~~STATE HIGHWAY ENGINEER~~
RESIDENT ENGINEER – CITY OF FLATLAND

We certify that the portland cement, chemical and mineral admixtures contained in the material described below are brands stated and comply with specifications for:

CONTRACT NUMBER:	
CEMENT BRAND: XYZ CEMENT CO.	MILL LOCATION: MIDLAND, CALIFORNIA
TYPE: II MODIFIED	

CHEMICAL ADMIXTURE

1. BRAND: ABC ADMIXTURE	MANUFACTURER: XYZ SUPPLIER
TYPE: WATER REDUCER	
2. BRAND:	MANUFACTURER:
TYPE:	

☐ *CHECK BOX IF A CHEMICAL ADMIXTURE WAS NOT USED*

MINERAL ADMIXTURE

MANUFACTURER: POZZ. INC.	CLASS: F

☐ *CHECK BOX IF A MINERAL ADMIXTURE WAS NOT USED*

DELIVERY DATE *(Ready-Mix)* 7/7/07	DATES OF FABRICATION *(Precast)*

LIST PRODUCTS TO WHICH CERTIFICATE APPLIES. *(Show size and lin. ft. of pipe, etc., delivery slip numbers for ready-mix.)*

Portland Cement
Flyash
Water Reducer

MANUFACTURER OF CONCRETE PRODUCTS: A.&B. READY MIX

By: AUTHORIZED REPRESENTATIVE SIGNATURE: Joe Anderson

FM 93 1839 — Original to Res. Engr. Retain Duplicate. — OSP 01 55624

Appendix J.2 - Example of a Certificate of Compliance for Portland Cement (continued)

This is to certify that the

Portland Cement

Supplied by ABC Cement Company complies with all requirements for Type II Portland Cement when tested in accordance with ASTM C - 494.

Local Agency Project No.
HP21L - 5055 - 111

Albert Howakowa
Quality Assurance Engineer
ABC Cement Company

Date: 07/07/07 .

Appendix K - Examples of Materials Certificates/Exceptions (Signed by the Resident Engineer at the Completion of the Project)

Federal-aid Project No.: Project HP21L - 5055 - 111

Subject: Materials Certification

This is to certify that the results of the tests on acceptance samples indicate that the materials incorporated in the construction work and the construction operations controlled by sampling PX and testing were in conformity with the approved plans and specifications.

□ All materials exceptions to the plans and specifications on this project are noted below.

No exceptions were found to the plans and specifications on this project.

Bill Sanders	*Bill Sanders*	7/7/07
Resident Engineer (Print Name)	Resident Engineer (Signature)	(Date)

Note: The signed original of this certificate is placed in the Resident Engineer's project files and one copy is mailed to the DLAE and filed under "Report of Expenditures."

See the attachment (next page)

Appendix K (continued)

Attachments: Materials Exceptions (Acceptance Testing)

Type of Test	Description of Work	Total Tests Performed On the Project	Number of Failed Tests	Action Taken
Slump Test	Concrete Sidewalk	8	1	When the measured slump exceeded the maximum limit, the entire concrete load was rejected.
Sand Equivalent	Aggregate for Structural Concrete	10	1	The tested S.E. was 70 and the contract compliance specification was 71 minimum. However, the concrete 28-day compressive strength was 4800 psi. The concrete was considered adequate and no materials deductions were taken.
Compaction	Sub grade Material	12	1	One failed test was noted. The failed area was watered and reworked. When this was completed, a retest was performed. The retest was acceptable.
Compaction	Hot Mix Asphalt	12	1	One failed area was noted. It was reworked and retested. The second test met specifications.

Bill Sanders

Date

Bill Sanders _____ July 4, 2007

Resident Engineer (Print Name) Resident Engineer (Signature)

Appendix Q - Example of a Certificate of Proficiency (Acceptance Sampler and Tester)

This is to certify that Harry J. Jones is a consultant for XYZ Construction Company in Midtown, CA. He has been evaluated by the City of Midtown and is shown to be fully qualified to perform the following tests:

Standard Test Method	Date Certified	Recertification Date
CT 125 - Sampling Materials	4/07	4/10
CT 202 - Sieve Analysis	4/07	4/10
CT 217 - Sand Equivalent	4/07	4/10
CT 227 - Cleanness Value	4/07	4/10
CT 375 - Relative Compaction (AC)	4/07	4/10
CT 504 - Air Content (PCC)	4/07	4/10
CT 518 - Unit Weight (PCC)	4/07	4/10
CT 533 - Penetration (PCC)	4/07	4/10

Issued By: Mary Harrington
(Printed Name)
IA Person for the City of Midtown

Signed By: *Mary Harrington*
(Signature)
IA Person for the City of Midtown

Date Issued: April 15, 2007
(Date)

Note: This certificate is valid until April 15, 2010, provided the acceptance sampler and tester successfully:

1. Maintains test equipment in good working condition and has current calibration stickers.
2. Passes all witness tests, and
3. Achieves acceptable split sample test results, as noted in the City of Midtown's approved QAP.

Appendix S - Example of a Laboratory Accreditation Letter

This is to certify that on August 10, 2007, I inspected the City of Maintown's testing laboratory at 1500 Main Street, Maintown, California. I hereby certify that this laboratory is accredited to perform acceptance testing for all City of Maintown projects from August 10, 2007 to August 10, 2008.

The laboratory samplers and testers all had current Certificates of Proficiency records. The laboratory was clean and equipped with adequate safety items (a plastic shield on their compression machine, a nearby emergency shower, two fire extinguishers and a first-aid kit). All testing equipment inspected conformed to the requirements noted in their updated California Test manual. In addition, calibration stickers were firmly affixed to all scales and testing equipment. All calibration stickers had dates on or after July 1, 2007.

The laboratory also had a QAP that was approved by the City of Maintown in 2007. The City of Maintown regularly participates in Caltrans Reference Samples Program and achieved ratings of 3 (or better) on the tests they normally perform.

Printed Name of Resident Engineer: Mary Harrington

City of Maintown

Signature of Resident Engineer: *Mary Harrington*

Date Signed: August 10, 2007

Appendix X - Typical Questions Asked During a FHWA/Caltrans Process Review

During a FHWA/Caltrans process review, the local agency's Resident Engineer and the IA person are usually asked specific questions pertaining to the control of materials on a city or county Federal-aid transportation project. Typical questions include:

- Do you have a copy of your agency's approved Quality Assurance Program?
- May we see your log summary sheet for all he acceptance tests performed on your project?
- Who certifies your laboratory or your consultant's laboratory?
- Who calibrates your test equipment? May we see your calibration records?
- Do you have written evidence that your laboratory is qualified?
- Do you have Certificates of Proficiency for the samplers and testers on your project?
- Do you know the difference between acceptance and assurance testing?
- Can you show me with the acceptance tests that were performed on this project?
- Can you show me the independent assurance tests that were performed on this project?
- Who approves your mix designs?
- Can you show me Certificates of Compliance for materials accepted on your project, but were not tested by your laboratory?
- Can you show me your local agency's ratings from your last few Reference Samples Programs?
- Do you have plant inspection and/or source inspection records?
- If your test records indicated that some materials did not meet minimum standards (but the materials were used on your project), who approved this action? Do you have a copy of this authorization?
- Please show me signed copies of the Materials Certificates and any Materials Exceptions when the Resident Engineer closed out the project.

QUALITY ASSURANCE PROGRAM
(QAP) AGENCY: City of Victorville

The purpose of this program is to provide assurance that the materials incorporated into the construction projects are in conformance with the contract specifications. This program should be updated every five years or more frequent if there are changes of the testing frequencies or to the tests themselves. To accomplish this purpose, the following terms and definitions will be used:

DEFINITION OF TERMS

- Acceptance Testing (AT) - Sampling and testing, or inspection, to determine the degree of compliance with contract requirements.
- Quality Assurance Program (QAP) - A sampling and testing program that will provide assurance that the materials and workmanship incorporated into the construction project are in conformance with the contract specifications. The main elements of a QAP are the AT.
- Source Inspection - AT of manufactured and prefabricated materials at locations other than the job site, generally at the manufactured location.

MATERIALS LABORATORY

The AGENCY will use their own materials laboratory or a private consultant materials laboratory to perform AT on Federal-aid and other designated projects. The materials laboratory shall be under the responsible management of a California registered Engineer with experience in sampling, inspection and testing of construction materials. The Engineer shall certify the results of all tests performed by laboratory personnel under the Engineer's supervision. The materials laboratory shall contain certified test equipment capable of performing the tests conforming to the provisions of this QAP.

The materials laboratory used shall provide documentation that the laboratory complies with the following procedures:

1. Correlation Testing Program - The materials laboratory shall be a participant in one or more of the following testing programs:

    a. AASHTO Materials Reference Laboratory (AMRL)
    b. Cement and Concrete Reference Laboratory (CCRL)
    c. Caltrans' Reference Samples Program (RSP)

2. Certification of Personnel - The materials laboratory shall employ personnel who are certified by one or more of the following:
    a. Caltrans District Materials Engineer
    b. Nationally recognized non-Caltrans organizations such as the American Concrete Institute, Asphalt, National Institute of Certification of Engineering Technologies, etc.
    c. Other recognized organizations approved by the State of California and/or Recognized by local governments or private associations.

3. Laboratory and Testing Equipment - The materials laboratory shall only use laboratory and testing equipment that is in good working order. All such equipment shall be calibrated at least once each year.
   All testing equipment must be calibrated by impartial means using devices of accuracy traceable to the National Institute of Standards and Technology. A decal shall be firmly affixed to each piece of equipment showing the date of the last calibration.

ACCEPTANCE TESTING (AT)

AT will be performed by a materials laboratory certified to perform the required tests. The tests results will be used to ensure that all materials incorporated into the project are in compliance with the contract specifications.

Testing methods will be in accordance with the CT Methods or a national recognized standard (i.e., AASHTO, ASTM, etc.) as specified in the contract specifications.

Sample locations and frequencies may be in accordance with the contract specifications. If not so specified in the contract specifications, samples shall be taken at the locations and frequencies as shown in Attachment #1 (Appendix D, "Acceptance Sampling and Testing Frequencies" of the QAP Manual).

REPORTING ACCEPTANCE TESTING RESULTS

The following are time periods for reporting material test results to the Resident Engineer:

- When the aggregate is sampled at material plants, test results for Sieve Analysis, Sand Equivalent and Cleanness Value should be submitted to the Resident Engineer within 24 hours after sampling.
- When materials are sampled at the job site, test results for compaction and maximum density should be submitted to the Resident Engineer within 24 hours after sampling.
- When soils and aggregates are sampled at the job site:

  (1) Test results for Sieve Analysis, Sand Equivalent and Cleanness Value should be submitted to the Resident Engineer within 72 hours after sampling.
  (2) Test results for "R" Value and asphalt concrete extraction should be submitted to the Resident Engineer within 96 hours after sampling.

When sampling products such as Portland Cement Concrete (PCC), cement-treated base (CTB), hot mix asphalt (HMA), and other such materials; the time of such sampling shall be varied with respect to the time of the day insofar as possible, in order to avoid a predictable sampling routine. The reporting of AT results, if not performed by the Resident Engineer's staff, shall be done on an expedited basis such as by fax or telephone.

TESTING OF MANUFACTURED MATERIALS

During the Design phase of the project, the Project Engineer may submit a "Source Inspection Request" see Attachment#2 (Exhibit 16-V of the LAPM) to the Agency, consultant, or Caltrans for inspection and testing of manufactured and prefabricated materials by their materials laboratory. A list of materials that can be typically accepted on the basis of certificates of compliance during construction is found in Attachment #3 (Appendix F of the QAP Manual). All certificates of compliance shall conform to the requirements of the contract specifications, for examples see Attachment #4 (Appendix J of the QAP Manual).

Should the Agency request Caltrans to conduct the source inspection, and the request is accepted, all sampling, testing, and acceptance of manufactured and prefabricated materials will be performed by Caltrans' Office of Materials Engineering and Testing Services.

For Federal-aid projects on the National Highway System (NHS), Caltrans will assist in certifying the materials laboratory, and the acceptance samplers and testers. For Federal-aid projects off the NHS, Caltrans may be able to assist in certifying the materials laboratory, and the acceptance samplers and testers.

PROJECT CERTIFICATION

Upon completion of a Federal-aid project, a "Materials Certificate" shall be completed by the Resident Engineer. The Agency shall include a "Materials Certificate" in the Report of Expenditures submitted to the Caltrans District Director, Attention: District Local Assistance Engineer. A copy of the "Materials Certificate" shall also be included in the Agency's construction records. The Resident Engineer in charge of the construction function for the Agency shall sign the certificate. All materials incorporated into the work which did not conform to specifications must be explained and justified on the "Materials Certification", including changes by virtue of contract change orders. See Attachment # 5 for an example (Appendix K of the QAP Manual).

RECORDS

All material records of samples and tests, material releases and certificates of compliance for the construction project shall be incorporated into the Resident Engineer's project file. If a Federal-aid project:

- The files shall be organized as described in Section 16.8 "Project Files" of the Local Assistance Procedures Manual.
- It is recommended that the complete project file be available at a single location for inspection by Caltrans and Federal Highway Administration (FHWA) personnel.
- The project files shall be available for at least three years following the date of final project voucher.
- The use of a "Log Summary," as shown in Appendix H of the QAP Manual , facilitates reviews of material sampling and testing by Caltrans and FHWA, and assists the Resident Engineer in tracking the frequency of testing.

When two or more projects are being furnished identical materials simultaneously from the same plant, it is not necessary to take separate samples or perform separate tests for each project; however, copies of the test reports are to be provided for each of the projects to complete the records.

APPROVED BY: Brian W. Gengler **44730 March 31, 2018**
(Signature) (CE# and Expiration Date)

NAME: Brian W. Gengler DATE: March 3, 2016

TITLE: City Engineer City of Victorville