DESERT TRAILS PREPARATORY ACADEMY

TRAFFIC IMPACT ANALYSIS

Prepared For:

Jorge Estrada
Placeworks
3 MacArthur Place, Suite 1100
Santa Ana, CA 92707

Prepared By:

ENVIRONMENT | PLANNING | DEVELOPMENT SOLUTIONS, INC.

2 Park Plaza, Suite 1120
Irvine, CA 92614
(949) 794-1180

Contact: Meghan Macias, TE
meghan@epdsolutions.com

August 23, 2019

Table of Contents

1 EXECUTIVE SUMMARY 1

2 INTRODUCTION 3
- **2.1 Project Description 3**
- **2.2 Study Area and Analysis Scenarios 6**
- **2.3 Methodology 8**
- **2.4 Significance Criteria 8**

3 BASELINE CONDITIONS 9
- **3.1 Existing Transportation System 9**
- **3.2 Existing Traffic Volumes and Levels of Service 9**
- **3.3 Cumulative (Year 2029) Baseline Traffic Volumes and LOS 11**

4 PROPOSED PROJECT 16
- **4.1 Project Description and Site Access 16**
- **4.2 Project Trip Generation 16**
- **4.3 Project Trips 16**

5 PROJECT IMPACTS 18
- **5.1 Existing Plus Project Traffic Volumes and Intersection Operations 18**
- **5.2 Cumulative (Year 2029) Plus Project Traffic Volumes and Intersection Operations 21**

6 ACCESS AND SITE CIRCULATION 23
- **6.1 Project Access 23**
- **6.2 School Area Signing and Striping 23**
- **6.3 Onsite Queuing 23**

7 Summary of Project Improvements and Project Fair-Share Calculation 27

Figures

FIGURE 1: PROJECT LOCATION 4
FIGURE 2: PROJECT SITE PLAN 5
FIGURE 3: PROJECT STUDY AREA 7
FIGURE 4: BASELINE AM AND PM PEAK HOUR TRAFFIC VOLUMES 10
FIGURE 5: LOCATION OF CUMULATIVE PROJECTS 12
FIGURE 6: CUMULATIVE PROJECTS TRIP ASSIGNMENT 15
FIGURE 7: PROJECT TRIP DISTRIBUTION AND ASSIGNMENT 17
FIGURE 8: BASELINE PLUS PROJECT AM AND PM PEAK HOUR TRAFFIC VOLUMES 19

Tables

TABLE 1. RELATIONSHIP BETWEEN CONTROL DELAY AND LOS AT A SIGNALIZED INTERSECTION 8
TABLE 2. RELATIONSHIP BETWEEN DELAY AND LOS AN UNSIGNALIZED INTERSECTION 8
TABLE 3. EXISTING AM AND PM PEAK HOUR LEVELS OF SERVICE 11
TABLE 4. CUMULATIVE PROJECTS TRIP GENERATION 13
TABLE 5. CUMULATIVE (YEAR 2029) BASELINE AM AND PM PEAK HOUR LEVELS OF SERVICE 14
TABLE 6. PROJECT TRIP GENERATION 16
TABLE 7. EXISTING AND EXISTING PLUS PROJECT PEAK HOUR LEVELS OF SERVICE 20
TABLE 8. CUMULATIVE (YEAR 2029) BASELINE AND CUMULATIVE (YEAR 2029) PLUS PROJECT PEAK HOUR LEVELS OF SERVICE 22
TABLE 9. PROBABILITY OF "N" VEHICLES IN QUEUE 25
TABLE 10. PROJECT MITIGATION AND FAIR SHARE 27

Appendices

APPENDIX A – TRAFFIC STUDY SCOPING AGREEMENT
APPENDIX B – TRAFFIC COUNTS
APPENDIX C – LEVEL OF SERVICE CALCULATIONS

1 EXECUTIVE SUMMARY

This Traffic Impact Analysis (TIA) evaluates the potential traffic impacts of a proposed new charter elementary school with a capacity of up to 550 students, the Desert Trails Preparatory Academy (project). Based on the Institute of Transportation Engineers, *Trip* Generation 10th Edition vehicle trip generation rates, the project would generate 851 daily trips including 511 AM peak hour and 64 PM peak hour trips.

The study area intersections listed in Section 2.2 – Study Area and Analysis Scenarios were evaluated during the AM and PM peak hours, which are defined as the hours with the highest traffic volumes during the 7 AM to 9 AM and 4 PM to 6 PM peak commute periods. AM and PM peak hour traffic operations were evaluated for the following scenarios:

- Existing Condition
- Existing plus Project Condition
- Cumulative Baseline (Year 2029) Condition – corresponds to 10 years from 2019 existing conditions
- Cumulative Baseline (Year 2029) plus Project Condition

Existing plus Project Intersection Analysis Results
One intersection would operate with unsatisfactory LOS in the Existing plus Project Condition. The project would cause the intersection of Bella Pine Dr./Luna Rd. to degrade from acceptable to unacceptable LOS during the AM peak hour. The following improvements would mitigate the project impact at Bella Pine Dr./Luna Rd.

- Bella Pine Dr./Luna Rd. - Add stop signs on the east and westbound approaches.

Cumulative (Year 2029) plus Project Intersection Analysis Results
Four intersections would operate with unsatisfactory LOS in the Cumulative (Year 2029) plus Project Condition. The project would cause the following intersections of to deteriorate from satisfactory to unsatisfactory LOS F during at least one peak hour or increase the delay of an already impacted intersection by more than two percent.

- US-395/Dos Palmas Rd.
- Mesa View Dr./Luna Rd.
- Bella Pine St./Luna Rd.
- US-395/Luna Rd.

The improvements discussed in the existing plus project section for Bella Pine St./Luna Rd. (add stop signs on the east and westbound approaches) reduces the impact to less than significant, so no additional improvements are needed. Implementation of the following improvements for the other four intersections would mitigate the impacts of the project in the Cumulative (Year 2029) plus Project condition:

- US-395/Dos Palmas Rd. – Add a westbound right-turn lane.

- Mesa View Dr./Luna Rd. – Add stop signs on the north and southbound approaches.

- Vista Verde St/Luna Rd. – Convert the TWSC intersection into an AWSC and add a westbound right-turn lane.

- US-395 – Change the left turn timing in the east/west direction from permitted to protected and add a westbound right-turn lane.

A LOS analysis was prepared for the project driveways using the Cumulative (Year 2029) plus Project traffic volumes. The project driveways are forecast to operate with satisfactory LOS D or better in the Cumulative (Year 2029) Plus Project condition.

A queuing analysis for the on-site drop-off/pick-up area was prepared using the Stochastic Queuing Analysis methodology. The 85th percentile queue is 23 vehicles. The project site plan provides an approximately 840-foot long loading zone on the north side of the project site, providing stacking for approximately 35 vehicles, twelve more than the expected 85th percentile queue. Therefore, the project provides adequate queuing distance for vehicles dropping-off or picking-up students.

2 INTRODUCTION

This Traffic Impact Analysis (TIA) has been prepared by EPD Solutions, Inc. (EPD) to analyze the potential transportation-related impacts of the proposed Desert Trails Preparatory Academy (project; proposed project). The scope of work for this TIA was reviewed and approved by the City of Victorville and is provided in Appendix A. The TIA was prepared according to the approved scope of work using methodologies and significance criteria consistent with the requirements of the City of Victorville General Plan, the San Bernardino County Congestion Management Program (CMP) and applicable provisions of the California Environmental Quality Act (CEQA).

2.1 Project Description

The proposed project is located on a vacant 4.66-acre site on the east side of Mesa View Drive, across from Fern Haven Street, and in between Pepperwood Street and Forrest Park Lane in the City of Victorville (City). The location of the project is shown in Figure 1 - Project Location, and the project site plan is shown in Figure 2 – Project Site Plan. The project proposes to construct a 550-student charter middle school. The school would be affiliated with the Desert Trails Preparatory Academy located at 14350 Bellflower Street in the City of Adelanto (Approximately 1.5 miles northwest of the project site). That school is currently a K-8 School. The middle school grades from the Adelanto Campus would be relocated to the proposed school. 84 parking spaces will be provided on-site, which includes 5 accessible parking spaces (van), 8 Clean Air Vehicle parking spaces, and 6 future Electric Vehicle Charging spaces.

Access to the parking lot will be provided via 2 unsignalized full-access driveways on Mesa View Drive, approximately 125 feet north of and 165 feet south of Fern Haven Street. A student drop-off/pick-up area will be provided on the north side of the project.

Figure 1: Project Location

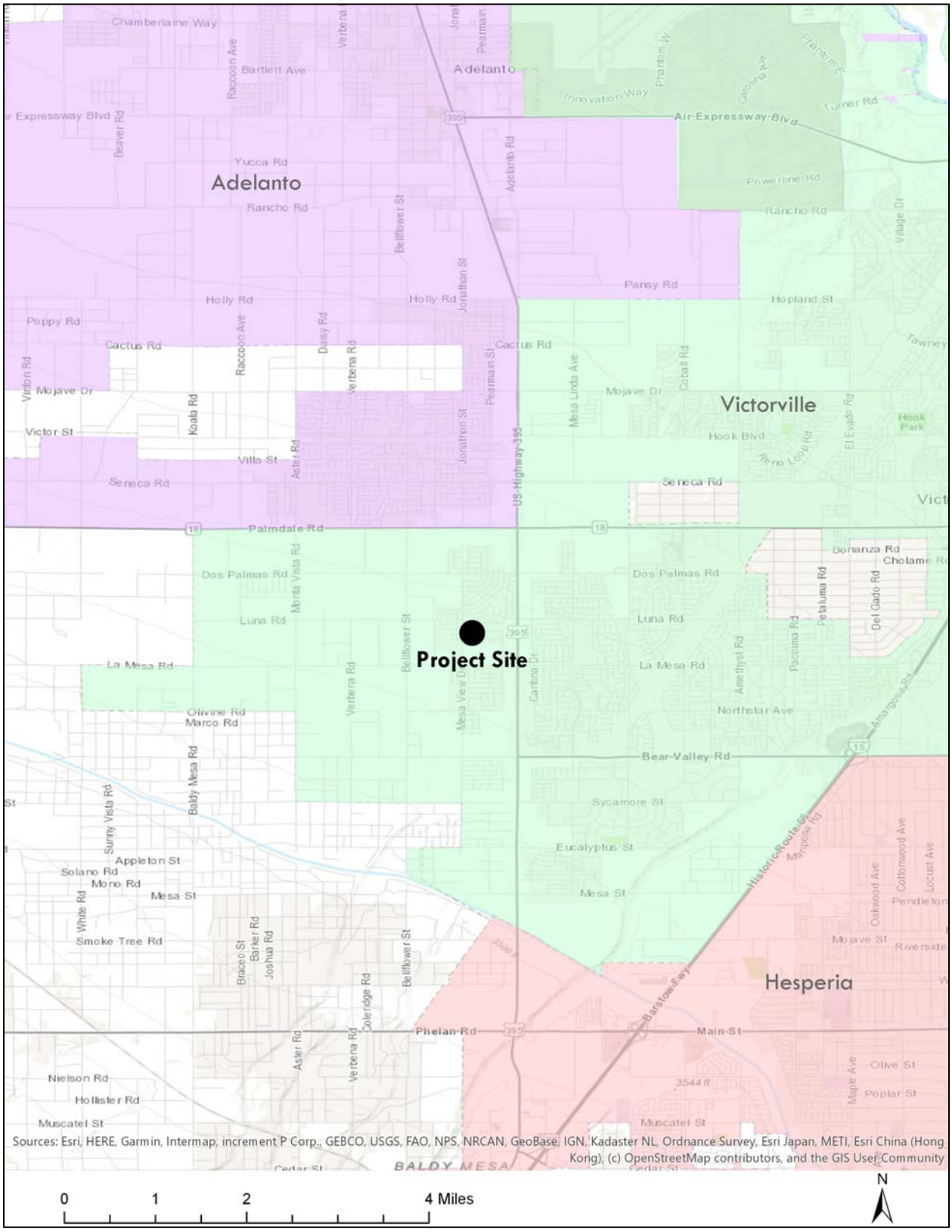

Figure 2: Project Site Plan

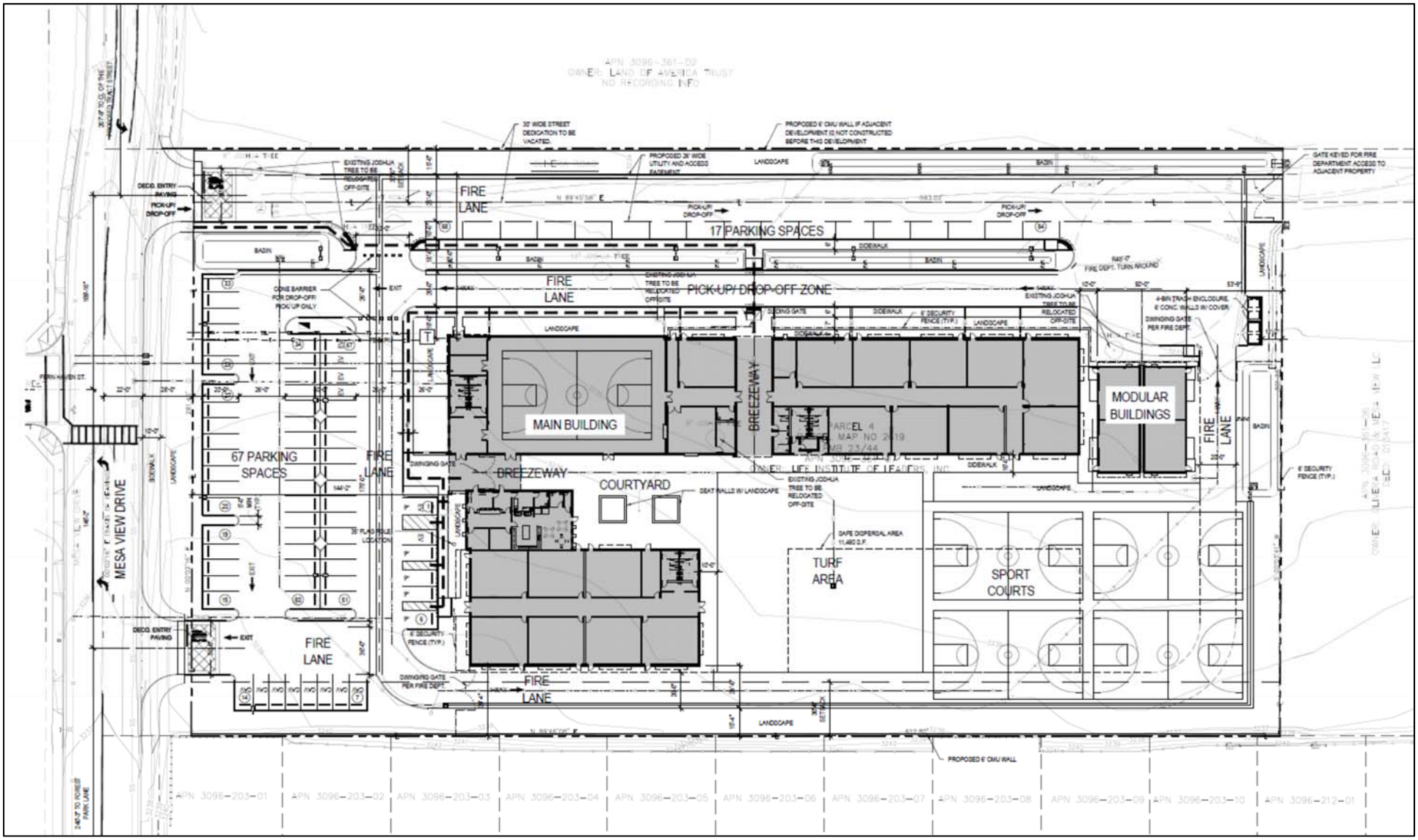

Source: Kirk Moeller Architects, Inc.

2.2 Study Area and Analysis Scenarios

This TIA includes all signalized and unsignalized intersections where the project has the potential to add 50-trips or more. The two driveway intersections (Intersections 8 and 9) were also analyzed in the plus project condition to evaluate the effect on Mesa View Drive. The following intersections were included in the analysis: The location of the study area intersections are shown on Figure 3 – Project Study Area.

1. US-395/Dos Palmas Rd
2. Mesa View Dr/Luna Rd
3. Vista View St/Luna Rd
4. Bella Pine St/Luna Rd
5. US-395/Luna Rd
6. Mesa View Dr/Fern Haven St
7. Mesa View Dr/La Mesa Rd
8. Mesa View Dr/North Driveway
9. Mesa View Dr/South Driveway

Study area intersections were evaluated during the AM and PM peak hours, which are defined as the hour with the highest traffic volumes during the 7 AM to 9 AM and 4 PM to 6 PM peak commute periods. AM and PM peak hour traffic operations were evaluated for the following scenarios:

- Existing Condition
- Existing plus Project Condition
- Cumulative Baseline (Year 2029) Condition – corresponds to 10 years from 2019 Existing conditions
- Cumulative (Year 2029) plus project

Forecast traffic volumes for the Cumulative (Year 2029) conditions were developed by applying a growth rate of two percent per year to the 2019 traffic counts and adding traffic from nearby cumulative (approved and not yet build and those under review) development projects. The growth rate was provided by City of Victorville Engineering staff during the scoping process. Cumulative projects were provided by the City of Victorville Planning Department and are included in the Cumulative (Year 2029) analysis. Cumulative lists from the City of Adelanto and City of Hesperia were found on their respective planning department websites.

Figure 3: Project Study Area

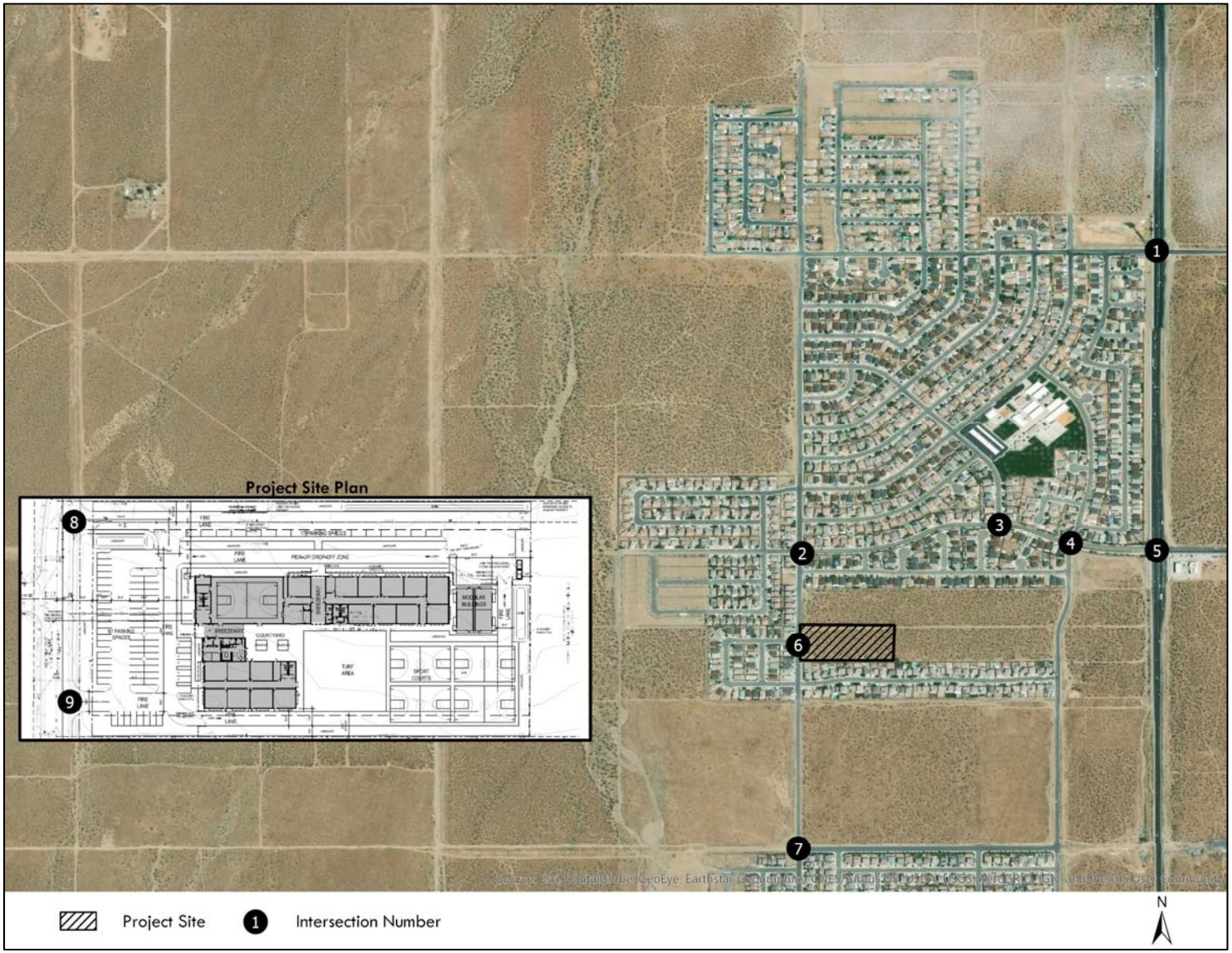

2.3 Methodology

Intersection operations are evaluated using Level of Service (LOS), which is a measure of the delay experienced by drivers on a roadway facility. LOS A indicates free-flow traffic conditions and is generally the best operating conditions. LOS F is an extremely congested condition and is the worst operating condition from the driver's perspective. In this report, LOS at signalized and unsignalized intersections is calculated using the Highway Capacity Manual (HCM), 6th Edition methodology.

LOS at signalized intersections is defined in terms of the weighted average control delay for the intersection as a whole. Control delay is a measure of the increase in travel time that is experienced due to traffic signal control and is expressed in terms of average control delay per vehicle (in seconds). Control delay is determined based on the intersection geometry and volume, signal cycle length, phasing and coordination along the arterial corridor. Table 1shows the relationship between control delay and LOS.

Table 1. Relationship between Control Delay and LOS at a Signalized Intersection

LOS	Delay (Seconds per Vehicle)
A	≤ 10
B	>10 – 20
C	>20 – 35
D	>35 – 55
E	>55 – 80
F	>80

Unsignalized intersections are categorized as either all-way stop control (AWSC) or two-way stop control (TWSC). LOS at AWSC intersections is determined by the weighted average control delay of the overall intersection. The HCM TWSC intersection methodology calculates LOS based on the delay experienced by drivers on the minor (stop-controlled) approaches to the intersection. For TWSC intersections, LOS is determined for each minor-street movement, as well as the major-street left-turns. The relationship between delay and LOS at Unsignalized intersections is shown in Table 2.

Table 2. Relationship between Delay and LOS an Unsignalized Intersection

LOS	Delay (seconds)
A	0-10
B	>10 – 15
C	>15 – 25
D	>25 – 35
E	>35 – 50
F	>50

2.4 Significance Criteria

The City of Victorville utilizes a LOS standard of LOS D. An impact would occur if the project causes an intersection to deteriorate from acceptable LOS (LOS D or better) to an unacceptable LOS (LOS E or F). At an intersection already operating at LOS E or F in the baseline condition, a project impact would occur if the project adds measurable delay (2% or more) to an intersection already operating at an unacceptable LOS.

3 BASELINE CONDITIONS

This section discusses the baseline (without project) conditions. Baseline conditions are those conditions that exist within the study area in the existing condition and that are forecast to occur in the future, without the proposed project.

3.1 Existing Transportation System

Access to the project site is provided by Mesa View Drive. Mesa View Drive is classified as a collector with a 64-foot right-of-way (44 feet curb-to-curb right-of way) on the City of Victorville General Plan circulation map. Mesa View Drive has a speed limit of 40 mph near the project site. There is sidewalk built along Mesa View Drive along the west side and along developed areas on the east side. The project construction would continue the sidewalk on the east side of the street. There are no bicycle facilities in this area. The project site is not served by Victor Valley Transportation Authority.

3.2 Existing Traffic Volumes and Levels of Service

Traffic counts at the existing study area intersections shown in Figure 3 – Project Study Area, were collected on Thursday, May 23, 2019. The counts were taken on typical weekdays when schools were in session. Intersection turn movement count sheets are provided in Appendix B. Existing AM and PM peak hour traffic volumes are shown on Figure 4 – Baseline AM and PM peak Hour Traffic Volumes.

The existing Levels of Service at the existing study area intersections were determined using the HCM methodology, described previously in section 2.3. Table 3 shows the existing AM and PM peak hour levels of service at study intersections. All LOS calculations are provided in Appendix C. As shown in Table 3, all study intersections operate at satisfactory LOS D or better during the AM and PM peak hours in the existing (2019) condition.

Figure 4: Baseline AM and PM Peak Hour Traffic Volumes

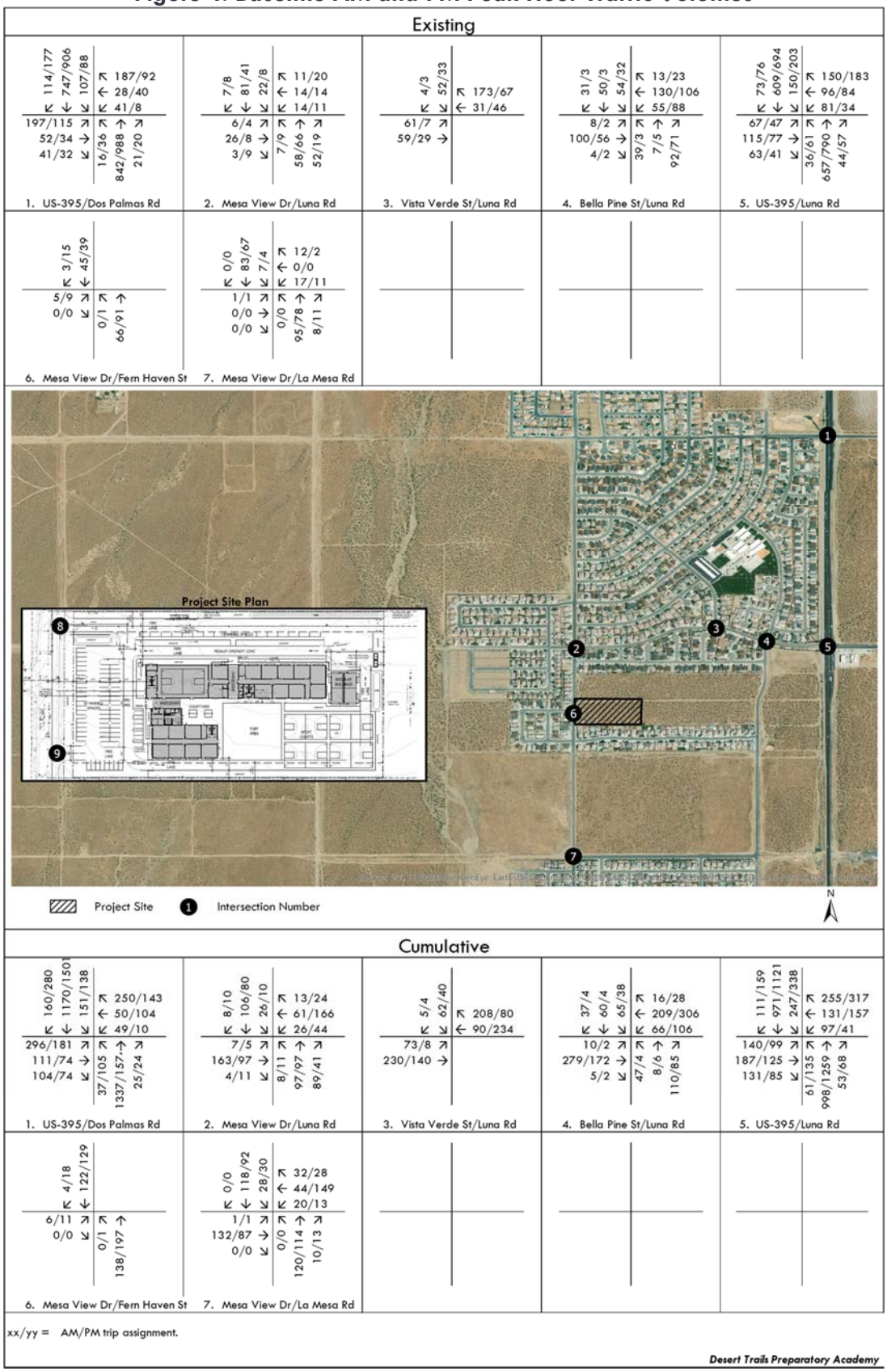

Table 3. Existing AM and PM Peak Hour Levels of Service

Intersection	LOS Method	AM Peak		PM Peak	
		Delay[1]	LOS[2]	Delay[1]	LOS[2]
1. US-395/Dos Palmas Rd	HCM	37.5	D	25	C
2. Mesa View Dr/Luna Rd	TWSC	11.9	B	10.4	B
3. Vista Verde St/Luna Rd	TWSC	15.3	C	9.8	A
4. Bella Pine St/Luna Rd	TWSC	26.1	D	14.1	B
5. US-395/Luna Rd	HCM	21.6	C	18.3	B
6. Mesa View Dr/Fern Haven St	TWSC	9.4	A	9.6	A
7. Mesa View Dr/La Mesa Rd	TWSC	7.3	A	7.2	A

HCM = Highway Capacity Manual
TWSC = Two-Way Stop Controlled (evaluated using the HCM Methodology)
[1] Delay in Seconds
[2] Level of Service

3.3 Cumulative (Year 2029) Baseline Traffic Volumes and LOS

Cumulative (Year 2029) Baseline traffic volumes were developed by applying a growth rate of two percent per year to the existing (2019) traffic volumes and adding traffic generated by other approved and pending development projects. A total of 18 projects in the Cities of Victorville, Hesperia, and Adelanto were included in the Cumulative (Year 2029) Baseline. The location of the cumulative projects are shown in Figure 5 – Location of Cumulative Projects. The project trip generation for each cumulative project was calculated using trip rates from the Institute of Transportation Engineers, *Trip* Generation, 10th Edition. Table 4 shows the trip generation for each cumulative project.

Figure 5: Location of Cumulative Projects

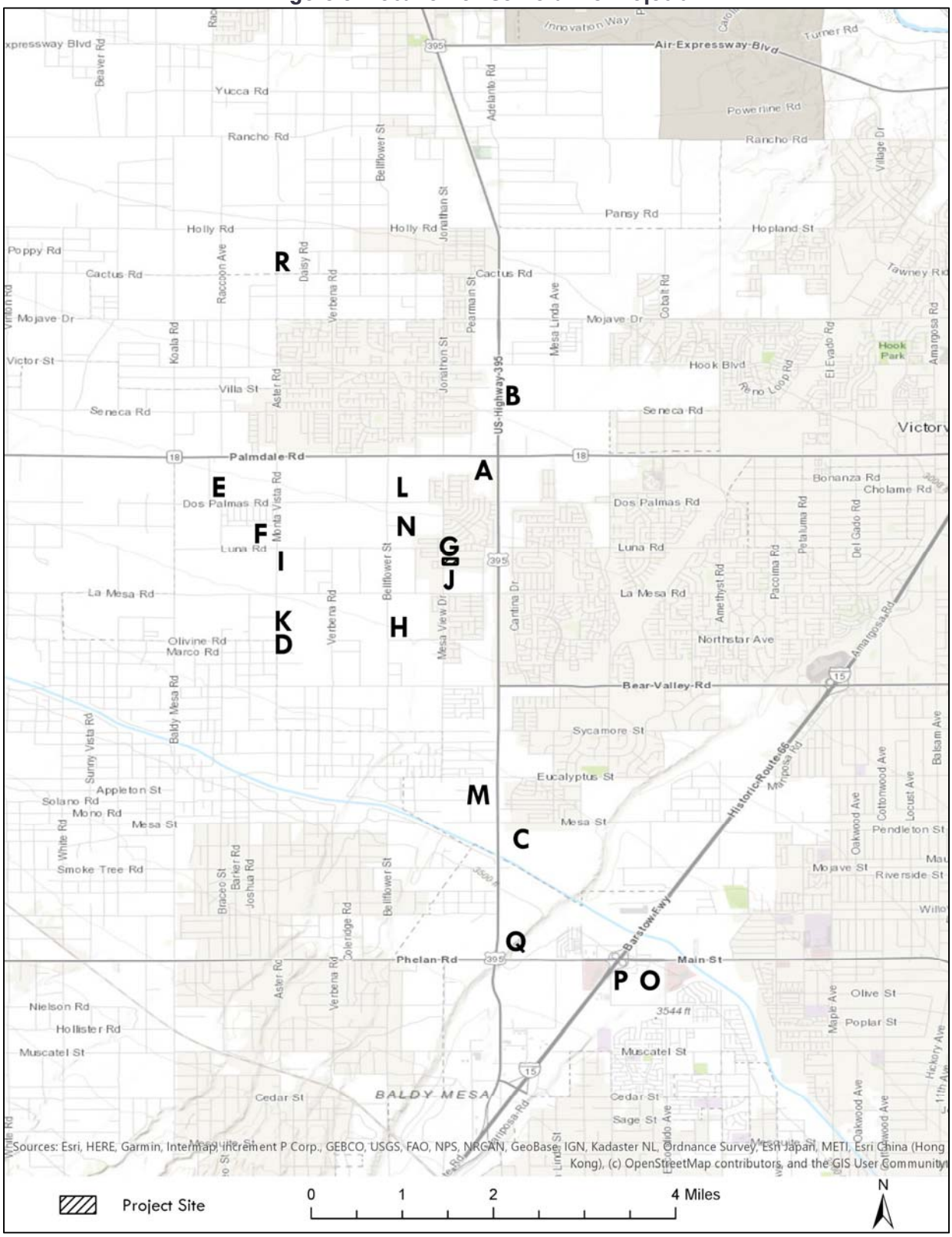

Table 4. Cumulative Projects Trip Generation

Land Use	Units		Daily	AM Peak Hour In	AM Peak Hour Out	AM Peak Hour Total	PM Peak Hour In	PM Peak Hour Out	PM Peak Hour Total
Trip Rates									
Single Family Detached Housing[1]		DU	9.440	0.185	0.555	0.740	0.624	0.366	0.990
Medical Office[2]		TSF	34.800	2.168	0.612	2.780	0.969	2.491	3.460
Quality Restaurant[3]		TSF	83.840	-	-	-	5.226	2.574	7.800
Gas/Service Station with Convinence Store[4]		TSF	1440.020	38.755	37.235	75.990	45.059	43.292	88.350
Fast Food[5]		TSF	470.950	20.497	19.693	40.190	19.042	17.578	36.620
Victorville Cumulative Trip Generation									
A: Shopping Center[6]	120	TSF	8463	259	230	489	333	324	657
B: Single Family Residential	69	DU	651	13	38	51	43	25	68
C: Single Family Residential	589	DU	5560	109	327	436	367	216	583
D: Single Family Residential	195	DU	1841	36	108	144	122	71	193
E: Single Family Residential	132	DU	1246	24	73	97	82	48	130
F: Single Family Residential	271	DU	2558	50	150	200	169	99	268
G: Single Family Residential	48	DU	453	9	27	36	30	18	48
H: Single Family Residential	151	DU	1425	28	84	112	94	55	149
I: Single Family Residential	168	DU	1586	31	93	124	105	62	167
J: Single Family Residential	147	DU	1388	27	82	109	92	54	146
K: Single Family Residential	246	DU	2322	46	137	183	153	90	243
L: Single Family Residential	72	DU	680	13	40	53	45	26	71
M: Single Family Residential	319	DU	3011	59	177	236	199	117	316
N: Single Family Residential	352	DU	3323	65	195	260	220	129	349
Hesperia Cumulative Trip Generation									
O: Medical Office	54	TSF	1885	117	33	150	52	135	187
P: Quality Restaurant	9	TSF	715	-	-	-	45	22	67
Q: Gas Station with Convinence Store	4.631	TSF	6669	179	172	351	209	200	409
Q: Fast Food Restaurant	4.188	TSF	1972	86	82	168	80	74	153
Adelanto Cumulative Trip Generation									
R: Single Family Residential	20	DU	189	4	11	15	12	7	19
Total Trip Generation			**45938**	**1155**	**2060**	**3215**	**2451**	**1772**	**4224**

TSF = Thousand Square Feet

DU = Dwelling Units

[1] Trip rates from the Institute of Transportation Engineers, *Trip Generation, 10th Edition,* 2017. Land Use Code 210 - Single Family Detached Housing.

[2] Trip rates from the Institute of Transportation Engineers, *Trip Generation, 10th Edition,* 2017. Land Use Code 720 - Medical-Dental Office Building.

[3] Trip rates from the Institute of Transportation Engineers, *Trip Generation, 10th Edition,* 2017. Land Use Code 931 - Quality Restaurant.

[4] Trip rates from the Institute of Transportation Engineers, *Trip Generation, 10th Edition,* 2017. Land Use Code 945 - Gas/Service Station with Convinence Market.

[5] Trip rates from the Institute of Transportation Engineers, *Trip Generation, 10th Edition,* 2017. Land Use Code 934 - Fast Food Restaurant with Drive-Through.

[6] Trip rates from the Traffic Study, Table 9, done for SWC US-395/Palmdale Road Project.

The traffic volumes generated by the cumulative projects were distributed to the study area intersections and are illustrated in Figure 6 – Cumulative Projects Trip Assignment. As noted in Section 2.2 – Study Area and Analysis Scenarios, forecast traffic volumes for the Cumulative (Year 2029) Baseline condition were developed by applying a growth rate of two percent per year to the 2019 traffic counts and adding traffic from cumulative projects. The Cumulative (Year 2029) Baseline traffic volumes are illustrated in Figure 4 - Baseline AM and PM Peak Hour Traffic Volumes.

The Cumulative (Year 2029) Baseline levels of service (LOS) at the seven existing study area intersections were determined using the HCM methodology, described previously in Section 2.3 - Methodology. Table 5 shows the Cumulative (Year 2029) Baseline AM and PM peak hour levels of service at study intersections. As shown in Table 5, three intersections are forecast to operate at unsatisfactory LOS E or F. US-395/Dos Palmas Rd and US-395/Luna Rd. (during the AM and PM peak hours) and Bella Pine St/Luna Rd. (during the AM peak hour) in the Cumulative (Year 2029) Baseline condition.

Table 5. Cumulative (Year 2029) Baseline AM and PM Peak Hour Levels of Service

Intersection	Signal Control	AM Peak		PM Peak	
		Delay[1]	LOS[2]	Delay[1]	LOS[2]
1. US-395/Dos Palmas Rd	Signal	64.6	E	57.1	E
2. Mesa View Dr/Luna Rd	TWSC	15.9	C	15.0	C
3. Vista Verde St/Luna Rd	TWSC	15.3	C	12.1	B
4. Bella Pine St/Luna Rd	TWSC	28.7	D	22.5	C
5. US-395/Luna Rd	Signal	33.5	C	60.0	E
6. Mesa View Dr/Fern Haven St	TWSC	10.2	B	10.9	B
7. Mesa View Dr/La Mesa Rd	TWSC	13.1	B	13.5	B

HCM = Highway Capacity Manual
TWSC = Two-Way Stop Controlled (evaluated using the HCM Methodology)
AWSC = All-Way Stop Controlled (evaluated using the HCM Methodology)
[1] Delay in Seconds
[2] Level of Service

Figure 6: Cumulative Projects Trip Assignment

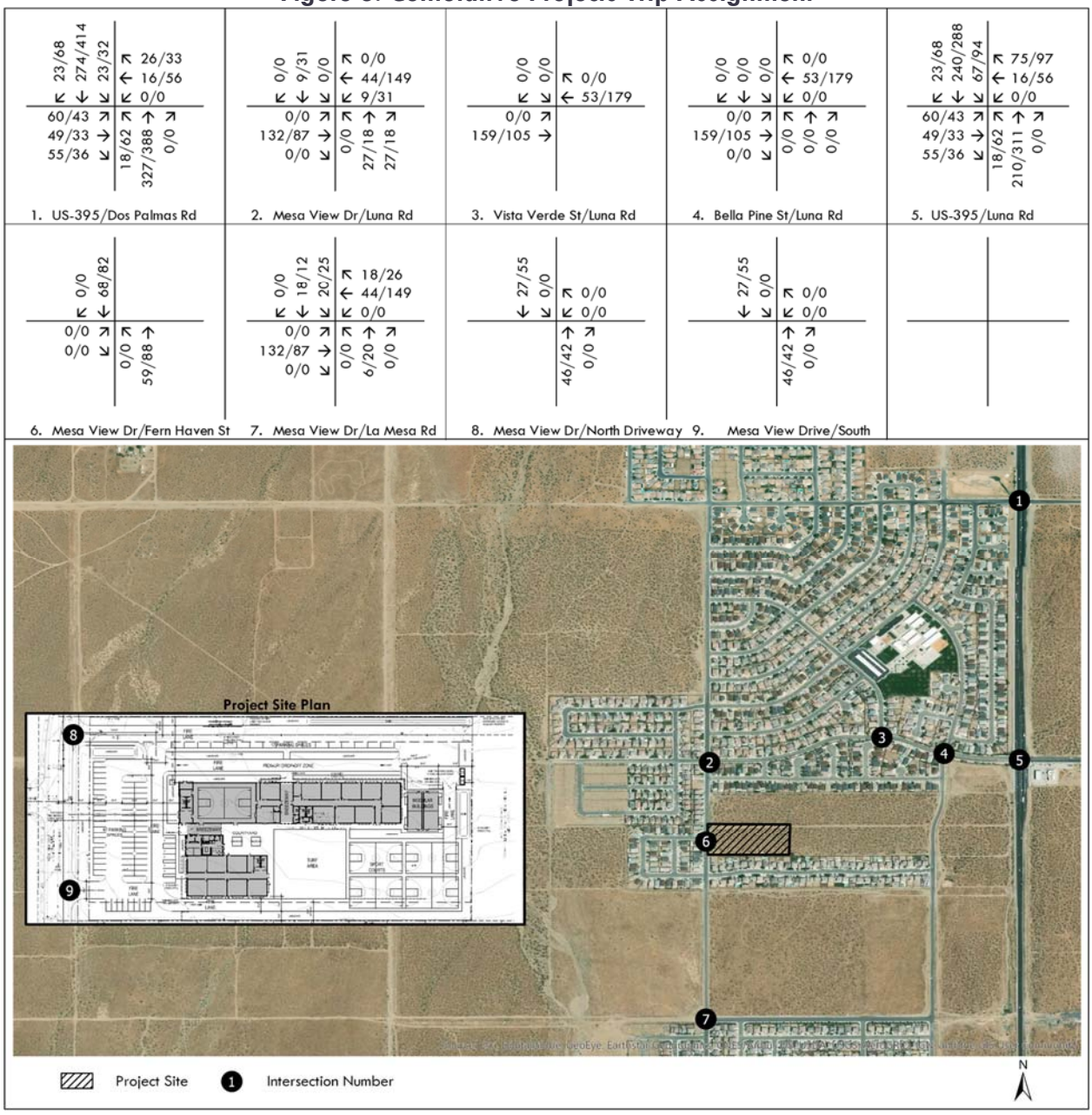

4 PROPOSED PROJECT

4.1 Project Description and Site Access

As described in Section 2.1 – Project Description, the project proposes to construct a charter middle school with a capacity of up to 550 students. Access to the parking lot will be provided via two unsignalized full-access driveways on Mesa View Drive. A student drop-off/pick-up area will be provided on the north side of the project.

4.2 Project Trip Generation

Vehicle trips were generated for the project using trip rates from the Institute of Transportation Engineers (ITE) *Trip Generation* (10th Edition, 2017). The trip generation for the project is shown in Table 1. Although the project proposes to have a capacity of 550-students, credit has been applied for the approximately 90 students that would be transferred to the school from the Desert Trails Preparatory Academy, Adelanto campus. Because these students are already traveling on the adjacent roadways, they would be included in existing count data. Therefore, the trip generation evaluates 460 students, rather than 550. The project trip generation is shown in Table 6. The project would generate 851 daily trips, including 511 AM peak hour and 64 PM peak hour trips. It should be noted that only the peak commute hours are evaluated in this report, consistent with the approved scoping agreement provided in Appendix A.

Table 6. Project Trip Generation

			AM Peak Hour			PM Peak Hour		
Land Use	**Units**	**Daily**	**In**	**Out**	**Total**	**In**	**Out**	**Total**
Trip Rates								
Charter Elementary School[1]	Per Student	1.85	0.59	0.52	1.11	0.05	0.09	0.14
Project Trip Generation								
Desert Trails Preparatory	460 Students[2]	851	271	240	511	23	42	64

[1] Trip rates from the Institute of Transportation Engineers, *Trip Generation, 10th Edition,* 2017. Land Use Code 537 - Charter Elementary School.

[2] Approximately 90 students currently enrolled at Desert Trails Preparatory Academy in Adelanto (approximately 1.5 miles northwest of the project site) will be transferred to the proposed charter school. These trips are already on the roadway network and therefore are not included in the project trip generation.

4.3 Project Trips

Project trips were distributed to the nine study area intersections based on the location of the project in relation to surrounding residential areas and the expected student distribution. The project trip distribution and assignment is shown in Figure 7 – Project Trip Distribution and Assignment. Project trips were assigned to the study area intersections by multiplying the net project trip generation by the trip distribution percent at each location.

Figure 7: Project Trip Distribution and Assignment

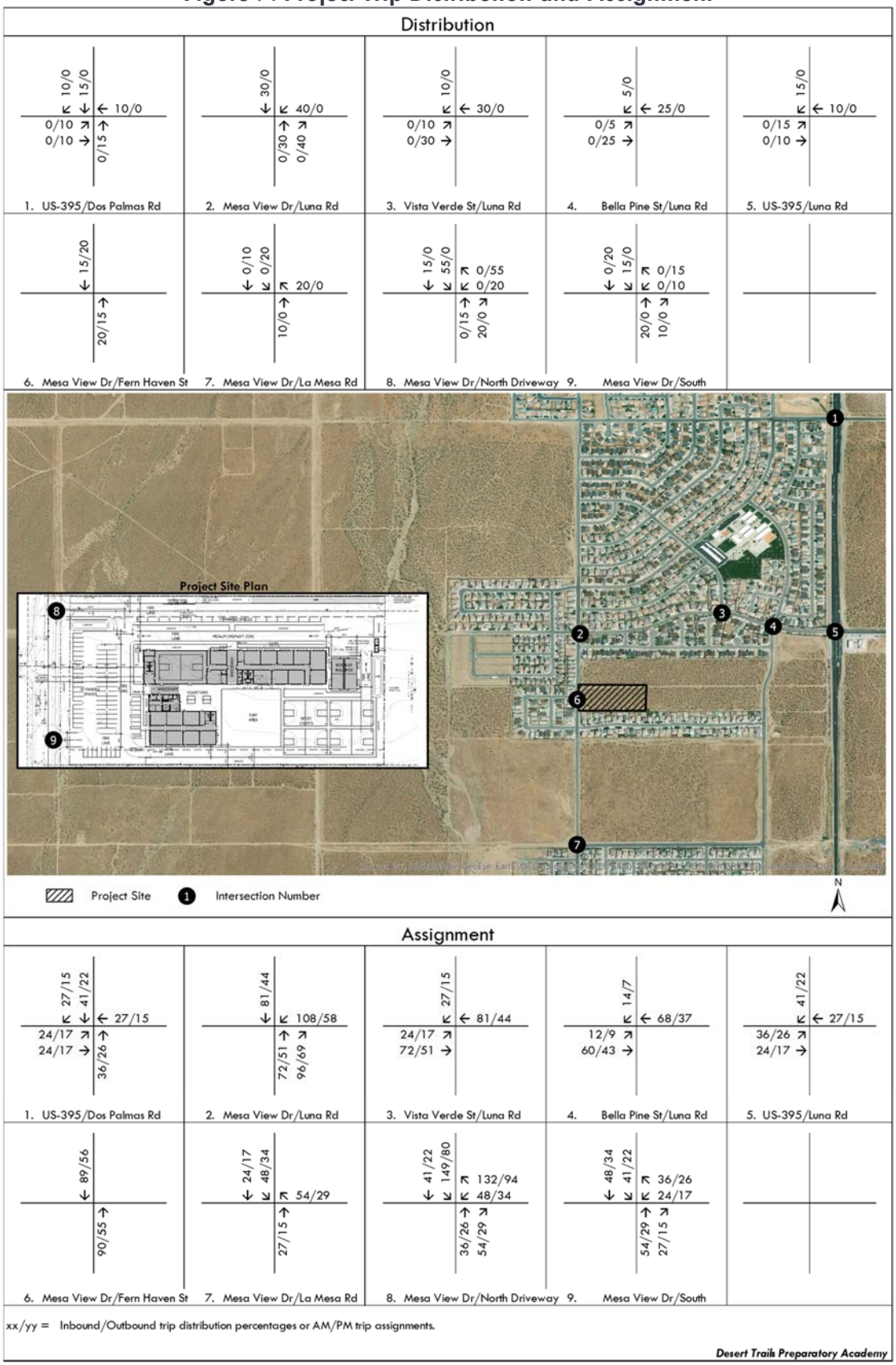

5 PROJECT IMPACTS

5.1 Existing Plus Project Traffic Volumes and Intersection Operations

Existing plus Project traffic volumes were determined by adding the project trips to Existing Without Project traffic volumes. Figure 8 – Baseline plus Project AM and PM Peak Hour Traffic Volumes, shows the Existing plus Project weekday AM and PM peak hour traffic volumes at the study intersections.

An intersection operations analysis was conducted for the study area to evaluate the Existing plus Project weekday AM and PM peak hour conditions. Intersection operations were calculated using the LOS methodology described previously in Section 2.3 - Methodology. Table 7 provides a comparison between the Existing Without and With Project conditions.

As shown in Table 7, one intersection would operate with unsatisfactory LOS in the Existing plus Project Condition. The project would cause the intersection of Bella Pine St./Luna Rd. to degrade from acceptable to unacceptable LOS F during the AM peak hour. Adding stop signs on eastbound and westbound Luna Rd. would result in the intersection operating at satisfactory LOS C. It should be noted that the recommendation to install stop signs at this location is a means to mitigate the unsatisfactory LOS. However, the ultimate decision to install all-way stop control should be undertaken in consultation with City Engineering staff and in accordance with the guidance in Section 2B.07 of the California Manual on Uniform Traffic Control Devices.

Figure 8: Baseline plus Project AM and PM Peak Hour Traffic Volumes

Existing Plus Project

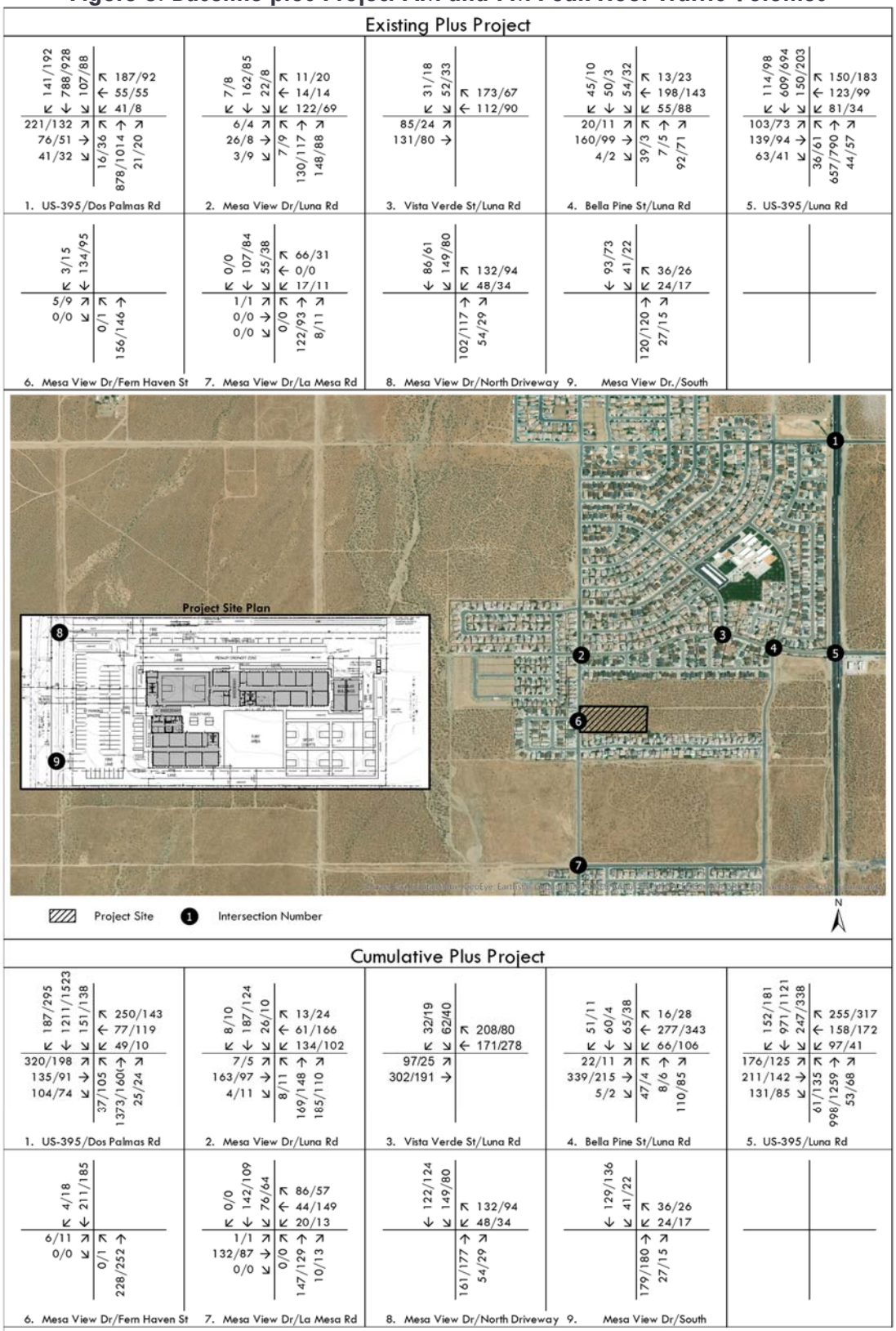

Cumulative Plus Project

xx/yy = AM/PM trip assignment.

Desert Trails Preparatory Academy

Table 7. Existing and Existing plus Project Peak Hour Levels of Service

Intersection	LOS Method	Existing				Existing plus Project				Impact?	
		AM Peak		PM Peak		AM Peak		PM Peak			
		Delay[1]	LOS[2]	Delay[1]	LOS[2]	Delay[1]	LOS[2]	Delay[1]	LOS[2]	AM	PM
1. US-395/Dos Palmas Rd	HCM	37.5	D	25.0	C	43.8	D	28.5	C	No	No
2. Mesa View Dr/Luna Rd	TWSC	11.9	B	10.4	B	22.8	C	14.8	B	No	No
3. Vista Verde St/Luna Rd	TWSC	15.3	C	9.8	A	23.0	C	11.3	B	No	No
4. Bella Pine St/Luna Rd	TWSC	26.1	D	14.1	B	74.1	F	15.3	C	Yes	No
5. US-395/Luna Rd	HCM	21.6	C	18.3	B	23.8	C	19.0	B	No	No
6. Mesa View Dr/Fern Haven St	TWSC	9.4	A	9.6	A	11.1	B	10.7	B	No	No
7. Mesa View Dr/La Mesa Rd	TWSC	7.3	A	7.2	A	7.5	A	7.5	A	No	No
8. Mesa View Dr/North Driveway	TWSC	-	-	-	-	12.1	B	10.5	B	No	No
9. Mesa View Dr/South Driveway	TWSC	-	-	-	-	10.1	B	9.7	A	No	No
LOS with Proposed Improvements											
4. Bella Pine St/Luna Rd	AWSC	-	-	-	-	20.1	C	-	-	No	-
Improvement: Convert the TWSC intersection into an AWSC											

HCM = Highway Capacity Manual

TWSC = Two-Way Stop Controlled (evaluated using the HCM Methodology)

AWSC = All-Way Stop Controlled (evaluated using the HCM Methodology)

[1] Delay in Seconds

[2] Level of Service

5.2 Cumulative (Year 2029) Plus Project Traffic Volumes and Intersection Operations

Cumulative (Year 2029) with-project traffic volumes were determined by adding the project trips to the Cumulative (Year 2029) Baseline traffic volumes. Figure 8 - Baseline plus Project AM and PM Peak Hour Traffic Volumes, shows the Cumulative (Year 2029) with-project weekday AM and PM peak hour traffic volumes at the study intersections.

An intersection operations analysis was conducted for the study area to evaluate the Cumulative (Year 2029) with-Project weekday AM and PM peak hour conditions. Intersection operations were calculated using the LOS methodology described previously. Table 8 provides a comparison between the Cumulative (Year 2029) without and with-project conditions.

As shown in Table 8, four intersections would operate with unsatisfactory LOS in the Cumulative (Year 2029) plus Project Condition. The project would cause the intersections of US-395/Dos Palmas Rd., Mesa View Dr./Luna Rd., Bella Pine St./Luna Rd., and US-395/Luna Rd. to deteriorate from satisfactory to unsatisfactory LOS F during at least one peak hour, or increase the delay of an already impacted intersection by more than two percent. The improvements discussed in the existing plus project section for Bella Pine St./Luna Rd. (Add stop signs on the east and westbound approaches) reduces the impact to less than significant, so no additional improvements are needed. Implementation of the following improvements for the other three intersections would result in the intersections operating at a reduced delay from the existing:

- US-395/Dos Palmas Rd. – Add a westbound right-turn lane.
- Mesa View Dr./Luna Rd. – Add a stop sign on the north and southbound approaches.
- US-395/Luna Road – Add a westbound right-turn lane.

It should be noted that the recommendation to install stop signs at Mesa View Dr./Luna Rd. is a means to mitigate the unsatisfactory LOS. However, the ultimate decision to install all-way stop control should be undertaken in consultation with City Engineering staff and in accordance with the guidance in Section 2B.07 of the California Manual on Uniform Traffic Control Devices.

Table 8. Cumulative (Year 2029) Baseline and Cumulative (Year 2029) plus Project Peak Hour Levels of Service

Intersection	Signal Control	Cumulative Baseline				Cumulative plus Project				Impact?	
		AM Peak		PM Peak		AM Peak		PM Peak			
		Delay[1]	LOS[2]	Delay[1]	LOS[2]	Delay[1]	LOS[2]	Delay[1]	LOS[2]	AM	PM
1. US-395/Dos Palmas Rd	Signal	64.6	E	57.1	E	71.3	E	64.5	E	Yes	Yes
2. Mesa View Dr/Luna Rd	TWSC	15.9	C	15.0	C	69.1	F	26.5	D	Yes	No
3. Vista Verde St/Luna Rd	TWSC	15.3	C	12.1	B	18.8	C	13.4	B	No	No
4. Bella Pine St/Luna Rd	TWSC	28.7	D	22.5	C	48.5	E	25.3	D	Yes	No
5. US-395/Luna Rd	Signal	33.5	C	60.0	E	40.4	D	72.7	E	No	Yes
6. Mesa View Dr/Fern Haven St	TWSC	10.2	B	10.9	B	11.8	B	11.9	B	No	No
7. Mesa View Dr/La Mesa Rd	TWSC	13.1	B	13.5	B	17.1	C	15.9	C	No	No
8. Mesa View Dr/North Driveway	TWSC	-	-	-	-	13.5	B	11.5	B	No	No
9. Mesa View Dr/South Driveway	TWSC	-	-	-	-	10.8	B	10.4	B	No	No
LOS with Proposed Improvements											
1. US-395/Dos Palmas Rd	Signal	-	-	-	-	59.2	E	51.3	D	No	No
Improvement: Add a westbound right-turn lane.											
2. Mesa View Dr/Luna Rd	AWSC	-	-	-	-	14.7	B	-	-	No	
Improvement: Add stop signs on the north and southbound approaches.											
4. Bella Pine St/Luna Rd	AWSC	-	-	-	-	20.6	C	-	-	No	
Improvement: Add stop signs on the east and westbound approaches.											
5. US-395/Luna Rd	Signal	-	-	-	-	-	-	38.5	D		No
Improvement: Add a westbound right-turn lane.											

HCM = Highway Capacity Manual
TWSC = Two-Way Stop Controlled (evaluated using the HCM Methodology)
AWSC = All-Way Stop Controlled (evaluated using the HCM Methodology)
[1] Delay in Seconds
[2] Level of Service

6 ACCESS AND SITE CIRCULATION

6.1 Project Access

As discussed in Section 4.1 – Project Description and Site Access and shown on Figure 2, access to the site will be provided via 2 unsignalized full-access driveways on Mesa View Drive, approximately 125 feet north of and 165 feet south of Fern Haven Street. A student drop-off/pick-up area will be provided on the north side of the project and would be most readily accessed from the north driveway. The drop-off/pick-up area will provide approximately 840 feet of total queue space internal to the site. Vehicles would enter the pick-up/drop-off zone from the northern driveway.

The LOS of the project driveways was previously shown in Tables 7 and 8. Both driveways are forecast to operate with satisfactory LOS in all analyzed conditions.

6.2 School Area Signing and Striping

The proposed roadway striping on Mesa View Drive adjacent to the project site is shown in Figure 2 – Project Site Plan. Modifications to the existing striping on Mesa View Drive adjacent to the project site are proposed to facilitate left-turning movements into the north project driveway and at Fern Haven Street. The project would include a southbound left-turn lane on Mesa View Drive at the north project driveway with approximately 90 feet of vehicle storage. This would be adequate to accommodate the 95th percentile vehicle queue of 1 vehicle during the AM peak hour. A northbound left-turn lane would be provided on Mesa View Drive at Fern Haven Street with approximately 90 feet of vehicle storage. Based on the analysis of this intersection, there would be less than one vehicle queued at the intersection therefore the length of the turn lane would be adequate. Furthermore, traffic turning left on Fern Haven would not block the south project driveway. Also, the southbound left-turn queue at the south project driveway is forecast to be less than one vehicle, so school traffic would not block the intersection at Fern Haven Street. All queuing estimates are taken from the LOS worksheets provided in Appendix C. A pedestrian crosswalk on Mesa View Drive is proposed on the south side of the Mesa View Drive/Fern Haven Street intersection.

At the time this study was prepared, a school area signing plan was not yet complete. All signage will comply with the type and placement described in Part 7 of the California Manual on Uniform Traffic Control Devices (MUTCD). Additionally, City Engineering staff has indicated that a solar Rectangular Rapid Flashing Beacon (RFFB) will be required to be installed at the crosswalk in front of the school as a condition of approval.

6.3 Onsite Queuing

A queuing analysis for the on-site drop-off/pick-up area was prepared using the Stochastic Queuing Analysis methodology from Traffic Flow Fundamentals, by Adolf D. May[1]. Since this study has no limit on queue length, has a "first in, first out" (FIFO) service type, and a random distribution

[1] Adolf D. May, *Traffic Flow Fundamentals* (Prentice-Hall, Inc., 1990).

of arrival and service times, the queuing performance was calculated according to the Random Service Problem equations. These equations provide an estimate of the average number of vehicles in the queue at any time, based upon the number of vehicles that enter each hour and the length of time each vehicle is in the queue.

The mean arrival rate (λ) was determined to be 271 vehicles during the peak hour using the trip generation shown in Table 1. Because the vehicles would most likely arrive during a peak 15 to 20-minute period, a PHF of 0.33 was applied to the inbound traffic volume resulting in an inbound hourly volume of 821 vehicles. It is likely that a portion of the inbound vehicles are staff destined to the parking lot located off of the south driveway, however the entire inbound trip generation was evaluated to be conservative. The average completion time (T) is the time that it takes for a car to enter the site, drop-off a student and depart. An assumption of 1 minute, or 0.0167 hours, was used for the completion time (T).

The first step in the analysis is to determine the mean service rate (μ). The mean service rate (μ) is the number of vehicles that can pass through the queue in an hour, based on the mean arrival rate (λ) and completion time (T). The mean service rate (μ) was determined using the equation $\mu=(1/T)+\lambda$, and was found to be 29 vehicles per hour[2]. The calculation is shown below:

1. $\mu=(1/T)+\lambda$

   T (Average Completion Time) = 1 minute (0.0167 hours)

   λ (Mean Arrival Rate) = 821 vehicles/hour

   μ (Mean Service Rate) = To be calculated

   $\mu = (1/0.0167 \text{ hr}) + 821 \text{ veh/hr}$

   $\mu = 881 \text{ veh/hr}$

After determining the mean arrival and service rate, the ratio of the arrival rate to the service rate is used to calculate the Traffic Intensity (ρ) $\{\rho = \lambda/\mu\}$. The calculation is shown below:

2. $\rho = \lambda/\mu$

   λ (Peak Arrival Rate) = 821 vehicles/hour

   μ (Mean Service Rate) = 881 veh/hour

   ρ (Traffic Intensity) = To be calculated

   $\rho = 821/881$

   $\rho = 0.93$

The Traffic Intensity is then used to calculate the average number of cars in the queue using the equation $E(n) = \rho/(1- \rho)$. The calculation is shown below:

[2] David G. Messerschmitt, *Reliability and Queuing*
http://www.eecs.berkeley.edu/~messer/netappc/Supplements/13-reliability.pdf

3. $E(n) = \rho/(1-\rho)$

   ρ (Traffic Intensity) = 0.932

   E(n) (Cars in the Queue) = To be calculated

   $E(n) = 0.932/(1-0.932)$

   $E(n) = 13.68 \approx 14$ veh

Based upon these calculations, it was determined that an average of 14 vehicles would be queued at any time. To determine the probability of exactly *n* vehicles in the system, the equation $P(n) = \rho^n(1-\rho)$ is used. The probability of n vehicles in the queue is shown in Table 9.

Table 9. Probability of "n" vehicles in Queue

Number of Queued Vehicles	Probability of "N" Vehicles	Probability <"n" Vehicles
0	6.8%	
1	6.3%	13.2%
2	5.9%	19.1%
3	5.5%	24.58%
4	*5.1%*	*29.72%*
5	4.8%	34.51%
6	4.5%	38.97%
7	4.2%	43.12%
8	3.9%	47.00%
9	3.6%	50.61%
10	3.4%	53.97%
11	3.1%	57.10%
12	2.9%	60.03%
13	2.7%	62.75%
14	2.5%	65.29%
15	2.4%	67.65%
16	2.2%	69.85%
17	2.1%	71.91%
18	1.9%	73.82%
19	1.8%	75.60%
10	3.4%	78.97%
20	1.7%	80.63%
21	1.5%	82.18%
22	1.4%	83.62%
23	***1.3%***	***84.96%***
24	1.3%	86.22%
23	1.3%	87.56%

As shown in Table 9, the 85th percentile queue is 23 vehicles. Using a stacking distance of 23.5 feet per vehicle, 541 feet of stacking distance would be required. The project site plan provides approximately 840-feet of queuing area on the north side of the project site, adjacent to and within the pick-up/drop-off zone. The pick-up/drop-off zone would provide on-site stacking for 35

vehicles, twelve more than the expected 85th percentile queue. Based on the expected peak trip generation of the project, there is almost no probability of the queue exceeding the available queue storage area. Therefore, the project site plan provides adequate queuing distance for vehicles dropping-off or picking-up students.

7 Summary of Project Improvements and Project Fair-Share Calculation

Utilizing the methodology discussed in section 2.3, four intersections were found to have a significant impact. In the Existing Plus Project condition, Bella Pine St/Luna Rd changes from a satisfactory LOS of D or better to an unsatisfactory LOS of F in the AM peak hour. In the Cumulative (Year 2029) Plus Project condition, Mesa View Dr/Luna Rd. and Bella Pine St./Luna Rd. would change from a satisfactory LOS of D or better to an unsatisfactory LOS E or F in the AM peak hour. US-395/Dos Palmas Rd., and US-395/Luna Rd. are already operating at an unsatisfactory LOS of E or F in the baseline condition, but the project adds more than a two percent delay at these intersections, so it is considered a significant impact. Table 10 outlines the improvements recommended for each of the impacted intersections, along with the estimated Fair Share Percent and total cost of the improvements. Planning-level cost estimates were taken from the *Traffic Impact Analysis* prepared by TJW Engineering, Inc. for the proposed retail project at SWC US-395/Palmdale Road (SR-18). With the implementation of the above improvements, the impact at the five intersections would be reduced to less than significant. As shown in Table 10, the total project share to mitigate the five impacted intersections would be $33,896.

Table 10. Project Mitigation and Fair Share

Intersection	Improvements	Fair Share Percent[1]	Total Cost[2]	Project Share
1. US-395/Dos Palmas Rd	Add a westbound right-turn lane.	11.73%	$150,000	$17,595
2. Mesa View Dr/Luna Rd	Add a stop sign on the north and southbound approaches.	53.77%	$3,000	$1,613
4. Bella Pine St/Luna Rd	Add a stop sign on the east and westbound approaches.	100%	$3,000	$3,000
5. US-395/Luna Rd	Add a westbound right-turn lane.	9.35%	$125,000	$11,688
			Total Project Share	$33,896

TWSC = Two-Way Stop Controlled (evaluated using the HCM Methodology)
AWSC = All-Way Stop Controlled (evaluated using the HCM Methodology)
[1]The Fair Share Percent was calculated using the Caltrans TIA guidelines 2002 Appendix B Methodology for Calculating Equitable Mitigation Measures
[2]Cost estimates taken from the *Traffic Impact Analysis* prepared by TJW Engineering, Inc. for SWC US-395/Palmdale Road (SR-18).

APPENDIX A – TRAFFIC STUDY SCOPING AGREEMENT

Environment | Planning | Development Solutions, Inc.

Memorandum

To: Anwar Wagdi, Traffic Engineer, City of Victorville

From: Meghan Macias, T.E.

CC: Jorge Estrada, Placeworks

Date: July 9, 2019

Subject: Desert Trails Preparatory Academy Traffic Impact Analysis Scope of Work

EPD Solutions, Inc. (EPD) proposes the following scope of work to prepare a Traffic Impact Analysis (TIA) for the proposed Desert Trails Preparatory Academy. The project proposes to construct a 550-student charter middle school on the east side of Mesa View Drive between Pepperwood Street and Forrest Park Lane. The school would be affiliated with the Desert Trails Preparatory Academy located at 14350 Bellflower Street in the City of Adelanto (approximately 1.5 miles northwest of the project site). That school is currently a K-8 school. The middle school grades from the Adelanto Campus would be relocated to the proposed school. The project construction will take place in one phase and no subsequent phases or expansion is anticipated.

The proposed school is not a part of any School District and would therefore not have a designated enrollment area. However, for purposes of the project trip distribution, it is anticipated that most students would live near the school, with a small percentage traveling from other areas to attend. Access to the project would be provided via two driveways on Mesa View Drive. A pick-up/drop-off zone is provided within the project site to accommodate student loading and unloading.

The trip generation for the project is shown in Table 1. Although the project proposes to have a capacity of 550-students, credit has been applied for the approximately 90 students that would be transferred to the school from the Desert Trails Preparatory Academy, Adelanto campus. Because these students are already traveling on the adjacent roadways, they would be included in existing count data. Therefore, the trip generation evaluates 460 students, rather than 550. Attached to this memo you will find the project site plan as well as graphics showing the proposed project trip distribution and assignment. Please review the scope of work and provide your comments or approval. If you would like to discuss the scope, please contact me at (949) 533-9182 or at meghan@epdsolutions.com.

TRAFFIC IMPACT ANALYSIS SCOPE OF WORK

Task 1: Existing Circulation System

A description of the existing circulation system of the study will be prepared to provide an assessment of the study area and existing intersection operations. Specific topics to be included in this section of the traffic study include:

- Existing street system
- Existing traffic volumes and levels of service
- Existing traffic controls
- Existing pedestrian/bicycle facilities
- Transit service, including bus facilities (if any)

Data Collection

The study area for the analysis was determined based on information provided by the City Traffic Engineer, Mr. Anwar Wagdy, during a conversation on May 8, 2019. Because the school will transfer approximately 90 students from the Desert Trails Preparatory Academy in Adelanto, it is anticipated that some students would live in Adelanto and would utilize US-395 and SR-18 to travel to the school. New intersection traffic counts will be collected at the following 9 study intersections. The TIA will include analysis of the following intersections (upon approval by City staff).

1. US-395/Dos Palmas Rd
2. Mesa View Dr/Luna Rd
3. Vista Verde St/Luna Rd
4. Bella Pine St/Luna Rd
5. US-395/Luna Rd
6. Mesa View Dr/Fern Haven St
7. Mesa View Dr/La Mesa Rd
8. Mesa View Dr/North Driveway
9. Mesa View Dr/South Driveway

Typical weekday AM and PM peak hour turn movement counts will be collected by a qualified traffic data collection firm. The intersection counts will be conducted on a Tuesday, Wednesday or Thursday of a non-holiday week. Upon timely review of this scope of work, EPD will schedule the counts to be collected prior to the end of the school year in the Victorville and Adelanto School Districts (prior to May 30).

Task 2: Project Traffic Analysis

A traffic analysis will be prepared to determine the impacts of the proposed project. All information provided by City staff and the new data collected as part of the existing conditions analysis will be utilized. The proposed analysis scenarios are outlined below:

- Existing Condition
- Existing plus Project Condition
- Cumulative Baseline Condition (2029 - 10 years beyond existing)
- Cumulative plus Project Condition

Forecast traffic volumes for the cumulative traffic condition will be based on the application of a growth rate of 2 percent per year, and traffic from adjacent cumulative (approved/pending) projects also to be

provided by the City. In addition, the Cities of Hesperia and Adelanto will be contacted to identify cumulative projects that could affect the project study area.

Trip Generation, Distribution and Assignment

A preliminary trip generation analysis has been prepared and is shown in Table 1.

Table 1. Desert Trails Preparatory Academy Trip Generation

			AM Peak Hour			PM Peak Hour		
Land Use	**Units**	**Daily**	**In**	**Out**	**Total**	**In**	**Out**	**Total**
Trip Rates								
Charter Elementary School[1]	Per Student	1.85	0.59	0.52	1.11	0.05	0.09	0.14
Project Trip Generation								
Desert Trails Preparatory	460 Students[2]	851	271	240	511	23	42	64

[1] Trip rates from the Institute of Transportation Engineers, *Trip Generation, 10th Edition,* 2017. Land Use Code 537 - Charter Elementary School.

[2] Approximately 90 students currently enrolled at Desert Trails Preparatory Academy in Adelanto (approximately 1.5 miles northwest of the project site) will be transferred to the proposed charter school. These trips are already on the roadway network and therefore are not included in the project trip generation.

The trip distribution was based on an assumed distribution of students traveling to the school and is shown in Figure 1. The proposed trip assignment is shown in Figure 2.

Intersection Level of Service Analyses

Intersection analysis and impact threshold determination will be performed using the *Highway Capacity Manual 6th Edition* (HCM) methodology will be used. For any impact found to be significant we will determine the percent of traffic contribution from the proposed project. All-Way Stop Warrants or Peak Hour Traffic Signal Warrants will be analyzed for unsignalized intersections that operate at unsatisfactory LOS.

LOS Criteria and Threshold of Significance

The City of Victorville General Plan Circulation Element has established LOS "D" as the minimum level of service for its roadways and intersections, except in certain high activity areas where LOS E is acceptable (Policy 1.1.1). This is consistent with San Bernardino County Congestion Management Program (CMP) LOS E standard.

The project would have a significant impact at a study area intersection if it would worsen an intersection peak hour LOS to LOS E or worse, or if it would worsen an already deficient intersection by two percent or more (Policy 1.1.2). LOS analyses and technical procedures will be consistent with Appendix B (Guidelines for CMP Traffic Impact Analysis Reports in San Bernardino Country) of the San Bernardino County CMP.

***Task 3 – Analysis of Site* Plan, Circulation, and Queuing**

A conceptual school zone signing and striping plan will be provided in the TIA. The project site plan and signing and striping plan will be reviewed with respect to on-site circulation, access, and driveway queuing. Queuing in the student pick-up/drop-off zone will be evaluated based on the anticipated drop-off/pick-up volume and duration. The project driveway analysis will include analysis of the peak periods and will evaluate whether site design elements provide adequate access for student drop-off and pick-up. This

analysis will also evaluate the need for addition of turning lanes due to queue lengths and any impacts of the project at adjacent intersections or driveways.

Movement of traffic at the proposed driveways and at Fern Haven Street will be evaluated to ensure that the proposed driveways do not conflict with traffic at Mesa View Dr/Fern Haven St. Additionally, school-related signage per the California Manual on Uniform Traffic Control Devices will be reviewed and location of signage will be recommended if not shown on the roadway improvement plans.

Attachments: Project Site Plan
Figure 1: Project Trip Distribution
Figure 2: Project Trip Assignment

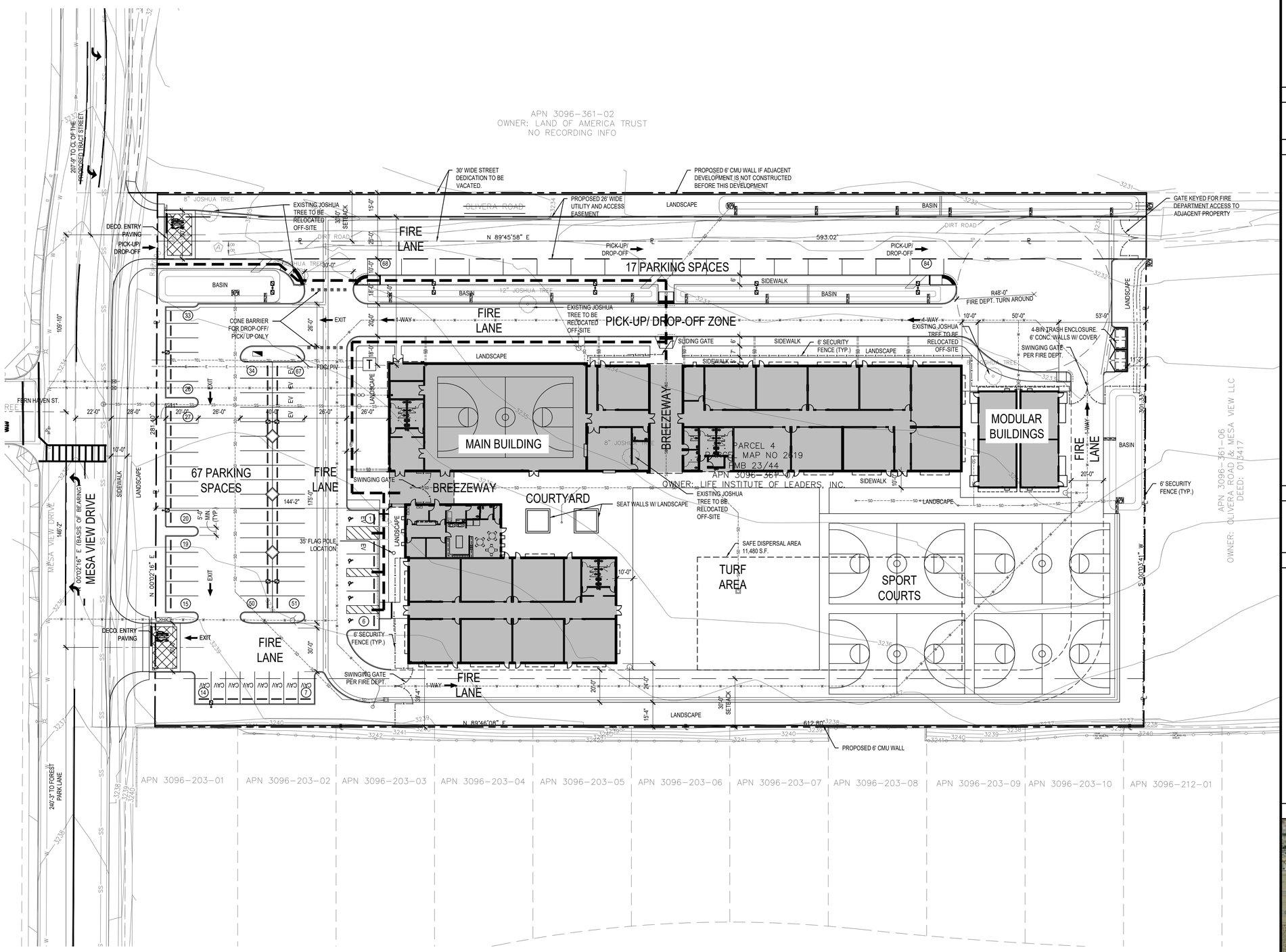

SITE PLAN

0 15' 30' 60'
SCALE: 1" = 30'-0"

N.

PROJECT TEAM

OWNER/ APPLICANT: DESERT TRAILS PREPARATORY ACADEMY
CONTACT: DEBRA TARVER
14530 BELLFLOWER ST.
ADELANTO, CA. 92301
T: 760-530-7680

ARCHITECT: KIRK MOELLER ARCHITECTS, INC.
CONTACT: ANDREW CHAMPION
2888 LOKER AVENUE EAST, STE. 220
CARLSBAD, CA. 92010
T: 760-814-8128
andy@kmarchitectsinc.com

CIVIL ENGINEER: KOLIBRIEN CORP.
CONTACT: JOHN JOHNSON
27919 JEFFERSON AVE., STE. 201
TEMECULA, CA. 92590
T: 951-252-1034
john@kolibrien.biz

LANDSCAPE ARCHITECT: ENVIRONS
CONTACT: MARTIN SCHMIDT
1909 STATE STREET
SAN DIEGO, CA. 92101
T: 619-232-7007
marty@environs.us

LEGAL DESCRIPTION

PARCEL 4 OF MAP NO. 2619, IN THE COUNTY OF SAN BERNARDINO, STATE OF CALIFORNIA, AS PER MAP RECORDED IN BOOK 23, PAGE 44, OF PARCEL MAPS, IN THE OFFICE OF THE COUNTY RECORDER OF SAID COUNTY

PROJECT SUMMARY

ASSESSORS PARCEL NUMBER:	3096-361-07
ADDRESS:	N/A
LOCATION DESCRIPTION:	SOUTH OF PEPPERWOOD STREET, NORTH OF FOREST PARK LANE. EAST OF MESA VIEW DR.
GROSS ACREAGE:	4.66 ACRES (203,051 S.F.)
NET ACREAGE:	T.B.D.
ZONE:	R-1
GENERAL PLAN:	LOW DENSITY RES.
MAIN BUILDING GROSS FLOOR AREA:	34,970 S.F.
MODULAR BUILDINGS:	1,440 X 2= 2,880 S.F.
TRASH ENCLOSURE:	220 S.F.
TOTAL BUILDING AREA:	38,070 S.F.
FLOOR AREA RATIO:	18.7%
LOT COVERAGE RATIO:	18.7%
LANDSCAPE COVERATE RATIO:	27% (55,414 S.F.)
STORIES:	1
TYPE OF CONSTRUCTION:	V-B
FIRE SPRINKLERS:	YES
FIRE ALARM:	YES
PARKING REQUIRED (1 SP./ CLASSROOM + 10 ADDITIONAL):	29 SPACES
PARKING PROVIDED:	84 SPACES
ACCESSIBLE PARKING PROVIDED (INC. IN TOTAL PROVIDED):	5 SPACES (4 REQ.'D)
CLEAN AIR VEHICLE PARKING (INC. IN TOTAL PROVIDED):	8 SPACES (8 REQ.'D)
FUTURE ELECTRIC VEHICLE CHARGING (INC. IN TOTAL PROVIDED):	6 SPACES (5 REQ.'D)

STATEMENT OF OPERATIONS

DESERT TRAILS PREPARATORY ACADEMY MIDDLE SCHOOL IS INTENDED FOR CHILDREN, GRADES 6 THROUGH 8. THE HOURS OF OPERATION WILL BE MONDAY THRU FRIDAY, 8AM TO 6 PM. OCCASIONAL EVENTS WILL DEVIATE FROM THE STANDARD HOURS. MEAL SERVICES WILL BE PROVIDED. APPROXIMATELY 550 STUDENTS ARE ANTICIPATED AT MAXIMUM CAPACITY AND 52 EMPLOYEES WILL BE REQUIRED TO OPERATE THIS FACILITY.

LEGEND

PROPERTY LINES

ACCESSIBLE ROUTE (MIN. 4' WIDE)

ZERO CURB

ELECTRICAL TRANSFORMER: T

25'-0" HIGH PARKING LOT LIGHTS

FIRE HYDRANT:

DOUBLE DETECTOR CHECK VALVE:

ACCESSIBLE PARKING STALLS (9'W X 20'L) W/ WHEEL STOP. STALLS ABUTTING LANDSCAPE ARE 10' WIDE

STANDARD PARKING STALLS (9'W X 20'L) W/ WHEEL STOP STALLS NOTED WITH "CAV" CLEAN AIR VEHICLE/ VANPOOL OR "EV" ELECTRIC VEHICLE CHARGING W/ WHEEL STOP. STALLS ABUTTING LANDSCAPE ARE 10' WIDE

CAV

VICINITY MAP

KIRK MOELLER ARCHITECTS, INC.
2888 LOKER AVE. EAST, STE 220
CARLSBAD, CA 92010
KIRK@KMARCHITECTSINC.COM
760-814-8128

ALL IDEAS, DESIGNS AND DIRECTION INDICATED WITHIN THESE DRAWINGS ARE THE PROPERTY OF KIRK MOELLER ARCHITECTS, INC. AND ARE INTENDED TO BE ASSOCIATED WITH THIS SPECIFIC PROJECT ONLY AND SHALL NOT OTHERWISE BE USED FOR ANY PURPOSE WHATSOEVER WITHOUT THE WRITTEN CONSENT OF THE KIRK MOELLER ARCHITECTS, INC. THERE SHALL BE NO CHANGES OR DEVIATIONS FROM THESE DRAWINGS OR ACCOMPANYING SPECIFICATIONS WITHOUT THE WRITTEN CONSENT OF THE ARCHITECT.

LICENSED ARCHITECT
KIRK M. MOELLER
No. C-35316
2/28/21
RENEWAL DATE
STATE OF CALIFORNIA

DESERT TRAILS MIDDLE SCHOOL
CHARTER SCHOOL DEVELOPMENT
VICTORVILLE, CA.

Date:	7-2-19
Project:	19-115 DESERT TRAILS M.S.
File:	A1.1
Revisions:	

Sheet Title:
SITE PLAN

Sheet Number:
A1.1

Figure 1: Project Trip Distribution

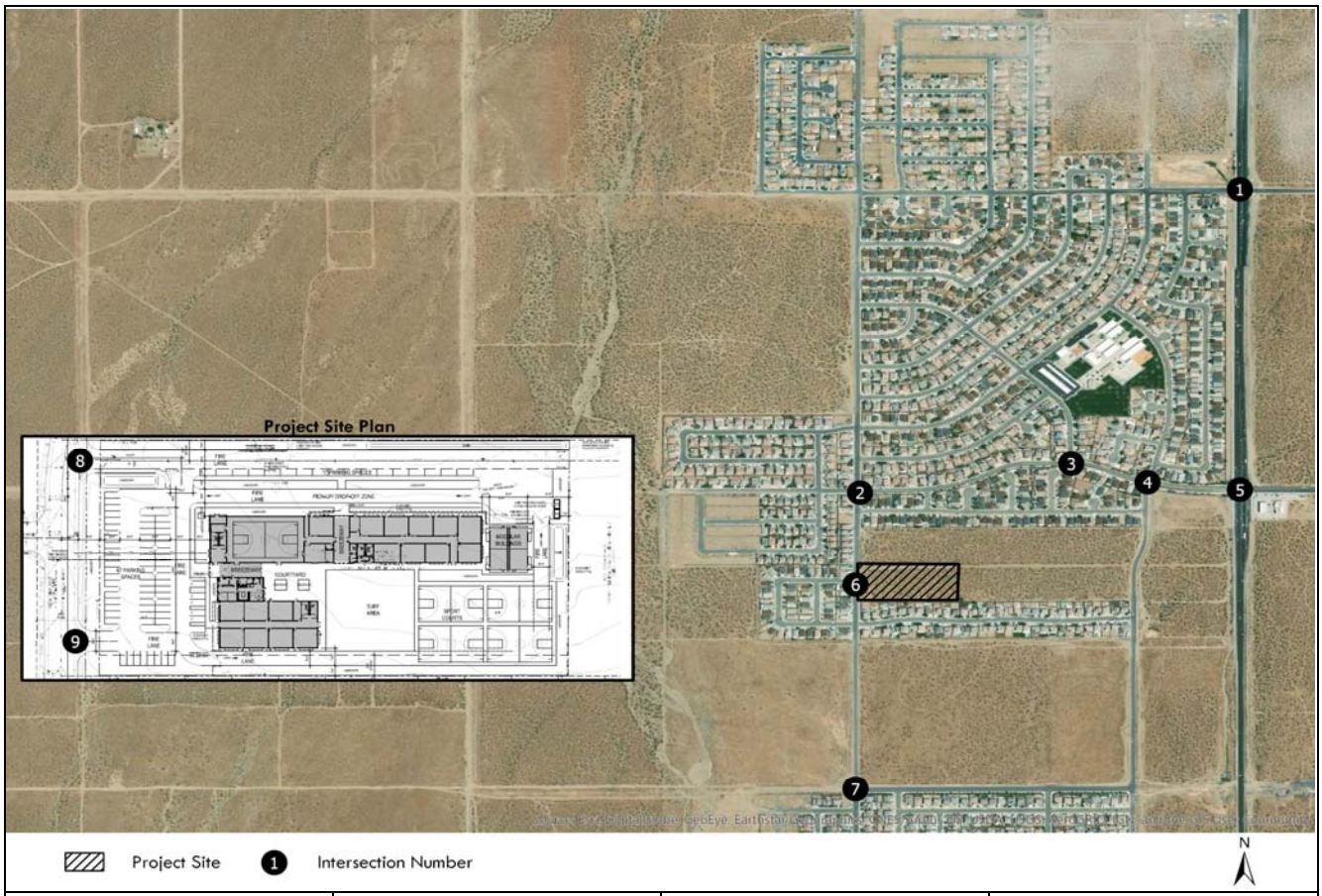

1. US-395/Dos Palmas Road

↖ 0/0	↑ 0/5	↗ 0/0
← 0/10		
↙ 0/0	↓ 0/0	↘ 0/0
↖ 0/0	← 10/0	↙ 0/0
↑ 0/0		
↗ 0/0	→ 5/0	↘ 0/0

2. Mesa View Dr/Luna Rd

↖ 0/0	↑ 0/20	↗ 0/0
← 0/0		
↙ 0/0	↓ 0/0	↘ 0/30
↖ 0/0	← 0/0	↙ 0/0
↑ 0/0		
↗ 0/0	→ 20/0	↘ 30/0

3. Vista Verde St/Luna Rd

↖ 0/10	↑ 0/0	↗ 0/0
← 0/20		
↙ 0/0	↓ 0/0	↘ 0/0
↖ 10/0	← 20/0	↙ 0/0
↑ 0/0		
↗ 0/0	→ 0/0	↘ 0/0

4. Bella Pine St/Luna Rd

↖ 0/5	↑ 0/0	↗ 0/0
← 0/15		
↙ 0/0	↓ 0/0	↘ 0/0
↖ 5/0	← 15/0	↙ 0/0
↑ 0/0		
↗ 0/0	→ 0/0	↘ 0/0

5. US-395/Luna Rd

↖ 0/5	↑ 0/0	↗ 0/0
← 0/10		
↙ 0/0	↓ 0/0	↘ 0/0
↖ 5/0	← 10/0	↙ 0/0
↑ 0/0		
↗ 0/0	→ 0/0	↘ 0/0

6. Mesa View Dr/Fern Haven St

↖ 10/0	↑ 30/10	↗ 0/0
← 0/0		
↙ 0/0	↓ 0/0	↘ 0/0
↖ 0/10	← 0/0	↙ 0/0
↑ 0/0		
↗ 0/0	→ 5/0	↘ 0/0

7. Mesa View Dr/La Mesa Rd

↖ 5/0	↑ 15/0	↗ 10/0
← 0/10		
↙ 0/0	↓ 0/0	↘ 0/0
↖ 0/5	← 0/0	↙ 0/0
↑ 0/0		
↗ 0/0	→ 0/0	↘ 0/0

8. Mesa View Dr/North Driveway

↖ 0/0	↑ 0/10	↗ 0/35
← 35/0		
↙ 0/0	↓ 0/0	↘ 0/0
↖ 0/0	← 0/0	↙ 40/0
↑ 0/0		
↗ 0/0	→ 0/0	↘ 0/40

9. Mesa View Dr/South Driveway

↖ 0/0	↑ 30/0	↗ 0/15
← 15/0		
↙ 0/0	↓ 0/0	↘ 0/0
↖ 0/0	← 0/0	↙ 10/0
↑ 0/0		
↗ 0/0	→ 0/30	↘ 0/10

xx/yy = Outbound/Inbound trip distribution percentages.

Figure 2: Project Trip Assignment

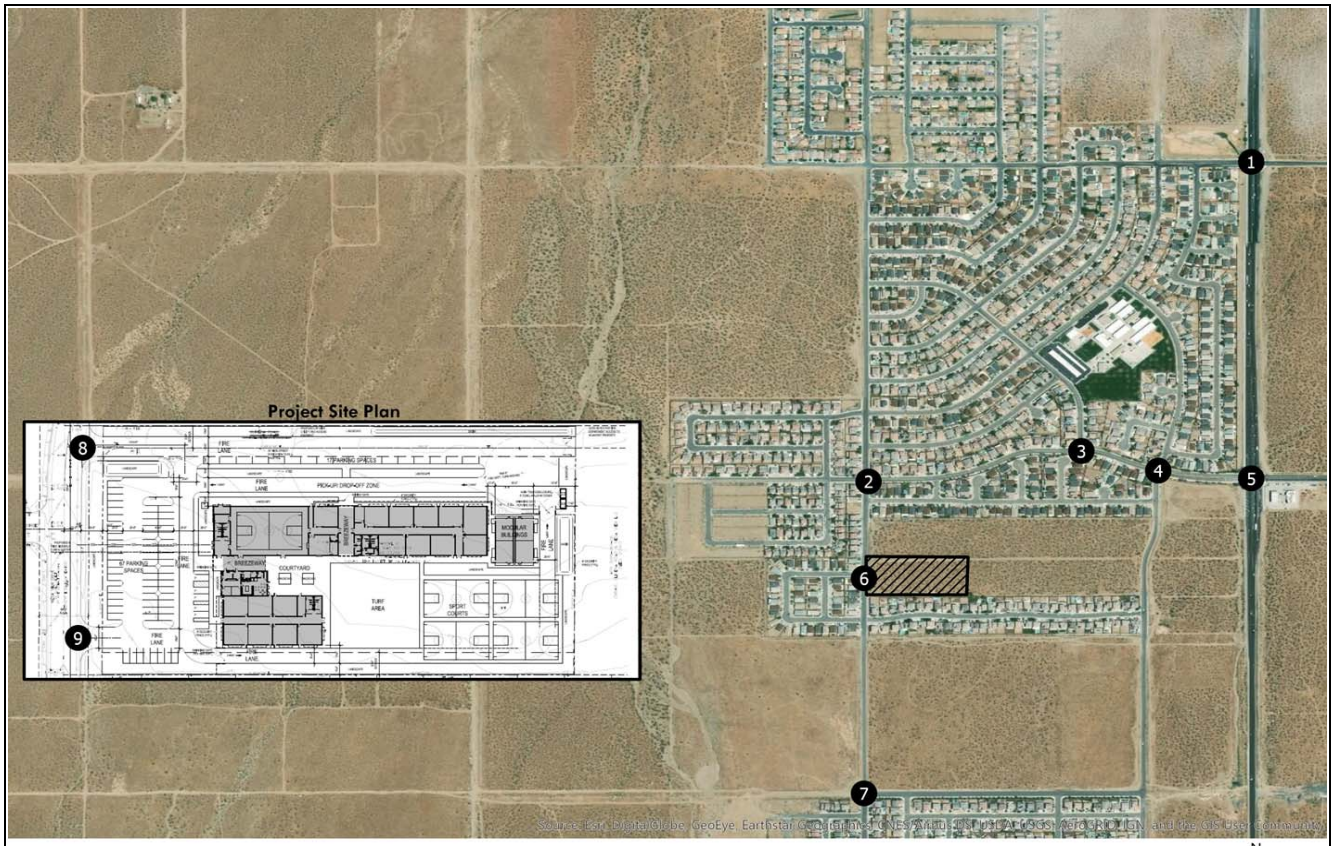

↖ 0/0	↓ 14/7	↙ 0/0	↗ 0/0	↑ 27/15	↖ 0/0	0/0 ↘	24/17 ↘	0/0 ↘	0/0 ↗	12/9 →	0/0 ↗
1. US-395/Dos Palmas Road											
↖ 0/0	↓ 54/29	↙ 0/0	↗ 0/0	↑ 0/0	↖ 81/44	0/0 ↘	0/0 ↘	0/0 ↘	0/0 ↗	48/34 →	72/51 ↗
2. Mesa View Dr/Luna Rd											
↖ 27/15	↓ 0/0	↙ 0/0	↗ 0/0	↑ 54/29	↖ 0/0	24/17 ↘	48/34 ↘	0/0 ↘	0/0 ↗	0/0 →	0/0 ↗
3. Vista Verde St/Luna Rd											
↖ 14/7	↓ 0/0	↙ 0/0	↗ 0/0	↑ 41/22	↖ 0/0	12/9 ↘	36/26 ↘	0/0 ↘	0/0 ↗	0/0 →	0/0 ↗
4. Bella Pine St/Luna Rd											
↖ 14/7	↓ 0/0	↙ 0/0	↗ 0/0	↑ 27/15	↖ 0/0	12/9 ↘	24/17 ↘	0/0 ↘	0/0 ↗	0/0 →	0/0 ↗
5. US-395/Luna Rd											
↖ 24/17	↓ 99/66	↙ 0/0	↗ 0/0	↑ 0/0	↖ 0/0	27/15 ↘	0/0 ↘	14/7 ↘	12/9 ↗	105/61 →	0/0 ↗
6. Mesa View Dr/Fern Haven St											
↖ 12/9	↓ 36/26	↙ 24/17	↗ 27/15	↑ 0/0	↖ 0/0	14/7 ↘	0/0 ↘	0/0 ↘	0/0 ↗	41/22 →	0/0 ↗
7. Mesa View Dr/La Mesa Rd											
↖ 0/0	↓ 27/15	↙ 95/51	↗ 84/60	↑ 0/0	↖ 96/69	0/0 ↘	0/0 ↘	0/0 ↘	0/0 ↗	24/17 →	108/58 ↗
8. Mesa View Dr/North Driveway											
↖ 0/0	↓ 72/51	↙ 41/22	↗ 36/26	↑ 0/0	↖ 24/17	0/0 ↘	0/0 ↘	0/0 ↘	0/0 ↗	81/44 →	27/15 ↗
9. Mesa View Dr/South Driveway											

xx/yy = AM/PM Peak Hour Traffic Volumes

APPENDIX B – TRAFFIC COUNTS

Counts Unlimited
PO Box 1178
Corona, CA 92878
(951) 268-6268

City of Victorville
N/S: US-395
E/W: Dos Palmas Drive
Weather: Clear

File Name : 04_VIC_US-395_Dos Palmas AM
Site Code : 99919361
Start Date : 5/23/2019
Page No : 1

Groups Printed- Total Volume

	US-395 Southbound				Dos Palmas Drive Westbound				US-395 Northbound				Dos Palmas Drive Eastbound				
Start Time	Left	Thru	Right	App. Total	Left	Thru	Right	App. Total	Left	Thru	Right	App. Total	Left	Thru	Right	App. Total	Int. Total
07:00 AM	34	220	8	262	10	3	42	55	2	188	7	197	18	10	11	39	553
07:15 AM	40	192	19	251	9	5	69	83	3	200	12	215	35	9	8	52	601
07:30 AM	30	194	24	248	15	3	61	79	4	233	2	239	32	12	11	55	621
07:45 AM	18	176	34	228	8	11	38	57	1	236	4	241	64	13	10	87	613
Total	122	782	85	989	42	22	210	274	10	857	25	892	149	44	40	233	2388
08:00 AM	19	185	37	241	9	9	19	37	8	173	3	184	66	18	12	96	558
08:15 AM	6	161	25	192	6	8	13	27	6	189	1	196	38	9	10	57	472
08:30 AM	9	184	15	208	1	2	8	11	3	178	6	187	30	12	15	57	463
08:45 AM	9	137	22	168	6	5	15	26	5	147	5	157	25	4	6	35	386
Total	43	667	99	809	22	24	55	101	22	687	15	724	159	43	43	245	1879
Grand Total	165	1449	184	1798	64	46	265	375	32	1544	40	1616	308	87	83	478	4267
Apprch %	9.2	80.6	10.2		17.1	12.3	70.7		2	95.5	2.5		64.4	18.2	17.4		
Total %	3.9	34	4.3	42.1	1.5	1.1	6.2	8.8	0.7	36.2	0.9	37.9	7.2	2	1.9	11.2	

	US-395 Southbound				Dos Palmas Drive Westbound				US-395 Northbound				Dos Palmas Drive Eastbound				
Start Time	Left	Thru	Right	App. Total	Left	Thru	Right	App. Total	Left	Thru	Right	App. Total	Left	Thru	Right	App. Total	Int. Total
Peak Hour Analysis From 07:00 AM to 08:45 AM - Peak 1 of 1																	
Peak Hour for Entire Intersection Begins at 07:15 AM																	
07:15 AM	**40**	192	19	**251**	9	5	**69**	**83**	3	200	**12**	215	35	9	8	52	601
07:30 AM	30	**194**	24	248	**15**	3	61	79	4	233	2	239	32	12	11	55	**621**
07:45 AM	18	176	34	228	8	**11**	38	57	1	**236**	4	**241**	64	13	10	87	613
08:00 AM	19	185	**37**	241	9	9	19	37	**8**	173	3	184	**66**	**18**	**12**	**96**	558
Total Volume	107	747	114	968	41	28	187	256	16	842	21	879	197	52	41	290	2393
% App. Total	11.1	77.2	11.8		16	10.9	73		1.8	95.8	2.4		67.9	17.9	14.1		
PHF	.669	.963	.770	.964	.683	.636	.678	.771	.500	.892	.438	.912	.746	.722	.854	.755	.963

Counts Unlimited
PO Box 1178
Corona, CA 92878
(951) 268-6268

City of Victorville
N/S: US-395
E/W: Dos Palmas Drive
Weather: Clear

File Name : 04_VIC_US-395_Dos Palmas AM
Site Code : 99919361
Start Date : 5/23/2019
Page No : 2

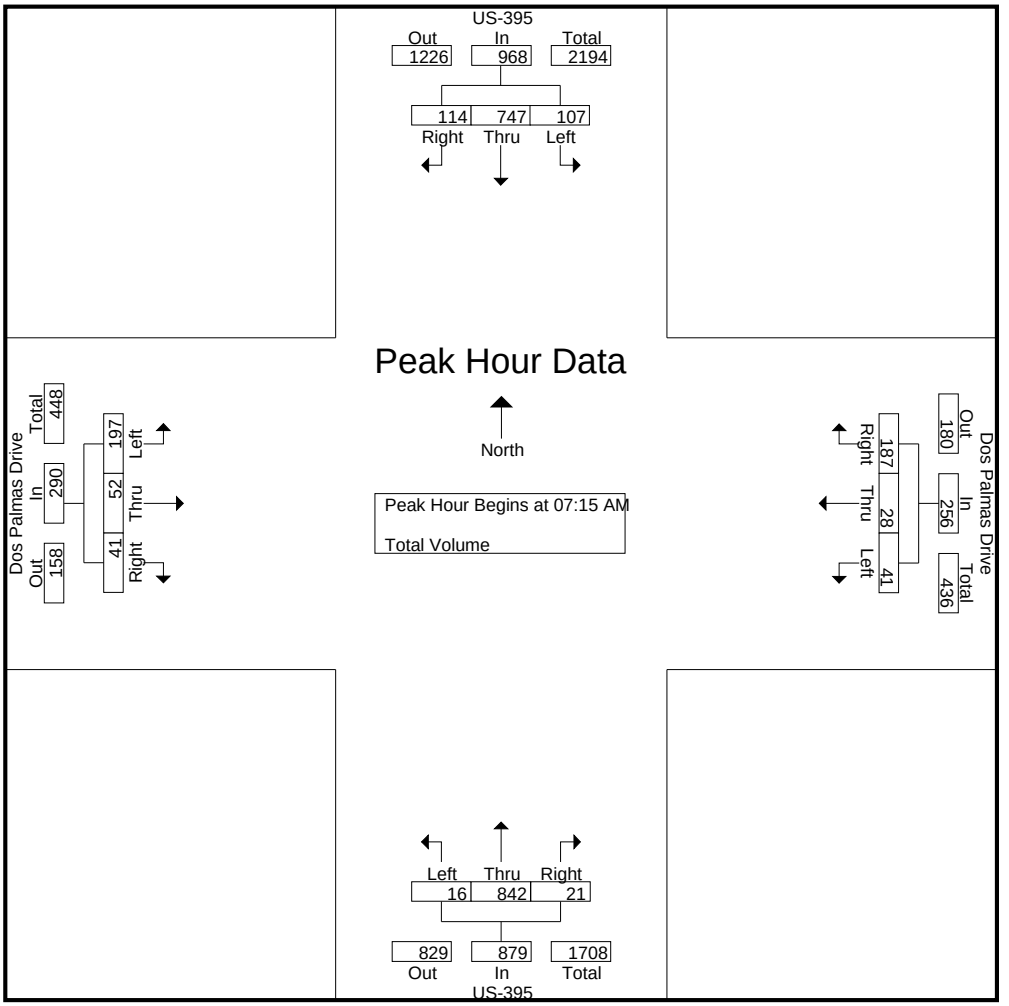

Peak Hour Analysis From 07:00 AM to 08:45 AM - Peak 1 of 1
Peak Hour for Each Approach Begins at:

	07:00 AM				07:00 AM				07:00 AM				07:45 AM			
+0 mins.	34	**220**	8	**262**	10	3	42	55	2	188	7	197	64	13	10	87
+15 mins.	**40**	192	19	251	9	5	**69**	**83**	3	200	**12**	215	**66**	**18**	12	**96**
+30 mins.	30	194	24	248	**15**	3	61	79	**4**	233	2	239	38	9	10	57
+45 mins.	18	176	**34**	228	8	**11**	38	57	1	**236**	4	**241**	30	12	**15**	57
Total Volume	122	782	85	989	42	22	210	274	10	857	25	892	198	52	47	297
% App. Total	12.3	79.1	8.6		15.3	8	76.6		1.1	96.1	2.8		66.7	17.5	15.8	
PHF	.763	.889	.625	.944	.700	.500	.761	.825	.625	.908	.521	.925	.750	.722	.783	.773

Counts Unlimited
PO Box 1178
Corona, CA 92878
(951) 268-6268

City of Victorville
N/S: US-395
E/W: Dos Palmas Drive
Weather: Clear

File Name : 04_VIC_US-395_Dos Palmas PM
Site Code : 99919361
Start Date : 5/23/2019
Page No : 1

Groups Printed- Total Volume

	US-395 Southbound				Dos Palmas Drive Westbound				US-395 Northbound				Dos Palmas Drive Eastbound				
Start Time	Left	Thru	Right	App. Total	Left	Thru	Right	App. Total	Left	Thru	Right	App. Total	Left	Thru	Right	App. Total	Int. Total
04:00 PM	28	248	51	327	2	21	16	39	9	201	9	219	27	12	5	44	629
04:15 PM	14	211	38	263	6	10	31	47	11	233	4	248	27	9	11	47	605
04:30 PM	18	269	39	326	5	10	23	38	11	215	9	235	26	11	6	43	642
04:45 PM	26	221	38	285	3	7	24	34	7	228	5	240	29	9	6	44	603
Total	86	949	166	1201	16	48	94	158	38	877	27	942	109	41	28	178	2479
05:00 PM	16	248	40	304	3	5	28	36	7	244	4	255	23	7	8	38	633
05:15 PM	26	184	52	262	3	9	29	41	12	260	6	278	28	14	9	51	632
05:30 PM	22	230	38	290	1	16	18	35	11	226	7	244	36	11	10	57	626
05:45 PM	24	244	47	315	1	10	17	28	6	258	3	267	28	2	5	35	645
Total	88	906	177	1171	8	40	92	140	36	988	20	1044	115	34	32	181	2536
Grand Total	174	1855	343	2372	24	88	186	298	74	1865	47	1986	224	75	60	359	5015
Apprch %	7.3	78.2	14.5		8.1	29.5	62.4		3.7	93.9	2.4		62.4	20.9	16.7		
Total %	3.5	37	6.8	47.3	0.5	1.8	3.7	5.9	1.5	37.2	0.9	39.6	4.5	1.5	1.2	7.2	

	US-395 Southbound				Dos Palmas Drive Westbound				US-395 Northbound				Dos Palmas Drive Eastbound				
Start Time	Left	Thru	Right	App. Total	Left	Thru	Right	App. Total	Left	Thru	Right	App. Total	Left	Thru	Right	App. Total	Int. Total
Peak Hour Analysis From 04:00 PM to 05:45 PM - Peak 1 of 1																	
Peak Hour for Entire Intersection Begins at 05:00 PM																	
05:00 PM	16	**248**	40	304	**3**	5	28	36	7	244	4	255	23	7	8	38	633
05:15 PM	**26**	184	**52**	262	3	9	**29**	**41**	**12**	**260**	6	**278**	28	**14**	9	51	632
05:30 PM	22	230	38	290	1	**16**	18	35	11	226	**7**	244	**36**	11	**10**	**57**	626
05:45 PM	24	244	47	**315**	1	10	17	28	6	258	3	267	28	2	5	35	**645**
Total Volume	88	906	177	1171	8	40	92	140	36	988	20	1044	115	34	32	181	2536
% App. Total	7.5	77.4	15.1		5.7	28.6	65.7		3.4	94.6	1.9		63.5	18.8	17.7		
PHF	.846	.913	.851	.929	.667	.625	.793	.854	.750	.950	.714	.939	.799	.607	.800	.794	.983

Counts Unlimited
PO Box 1178
Corona, CA 92878
(951) 268-6268

City of Victorville
N/S: US-395
E/W: Dos Palmas Drive
Weather: Clear

File Name : 04_VIC_US-395_Dos Palmas PM
Site Code : 99919361
Start Date : 5/23/2019
Page No : 2

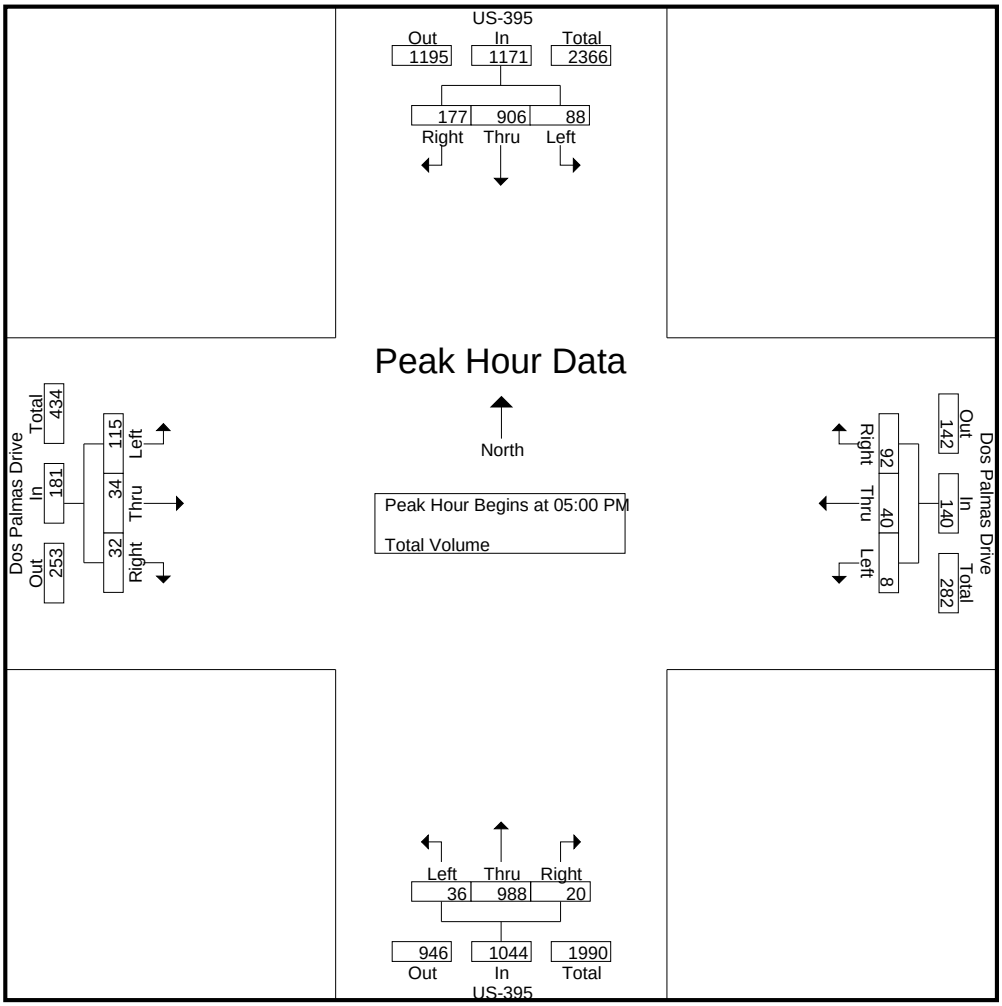

Peak Hour Analysis From 04:00 PM to 05:45 PM - Peak 1 of 1
Peak Hour for Each Approach Begins at:

	04:00 PM				04:00 PM				05:00 PM				04:45 PM			
+0 mins.	**28**	248	**51**	**327**	2	**21**	16	39	7	244	4	255	29	9	6	44
+15 mins.	14	211	38	263	**6**	10	**31**	**47**	**12**	**260**	6	**278**	23	7	8	38
+30 mins.	18	**269**	39	326	5	10	23	38	11	226	**7**	244	28	**14**	9	51
+45 mins.	26	221	38	285	3	7	24	34	6	258	3	267	**36**	11	**10**	**57**
Total Volume	86	949	166	1201	16	48	94	158	36	988	20	1044	116	41	33	190
% App. Total	7.2	79	13.8		10.1	30.4	59.5		3.4	94.6	1.9		61.1	21.6	17.4	
PHF	.768	.882	.814	.918	.667	.571	.758	.840	.750	.950	.714	.939	.806	.732	.825	.833

Location: Victorville
N/S: US-395
E/W: Dos Palmas Drive

Date: 5/23/2019
Day: Thursday

PEDESTRIANS

	North Leg US-395	East Leg Dos Palmas Drive	South Leg US-395	West Leg Dos Palmas Drive	
	Pedestrians	Pedestrians	Pedestrians	Pedestrians	
7:00 AM	0	0	0	0	0
7:15 AM	0	0	0	0	0
7:30 AM	0	0	0	0	0
7:45 AM	0	0	0	0	0
8:00 AM	0	0	0	1	1
8:15 AM	0	0	0	1	1
8:30 AM	0	0	0	0	0
8:45 AM	0	0	0	1	1
TOTAL VOLUMES:	0	0	0	3	3

	North Leg US-395	East Leg Dos Palmas Drive	South Leg US-395	West Leg Dos Palmas Drive	
	Pedestrians	Pedestrians	Pedestrians	Pedestrians	
4:00 PM	0	0	0	2	2
4:15 PM	0	0	0	0	0
4:30 PM	0	0	0	0	0
4:45 PM	0	1	0	0	1
5:00 PM	0	0	0	0	0
5:15 PM	0	0	0	0	0
5:30 PM	0	0	0	0	0
5:45 PM	0	0	0	0	0
TOTAL VOLUMES:	0	1	0	2	3

Location: Victorville
N/S: US-395
E/W: Dos Palmas Drive

Date: 5/23/2019
Day: Thursday

BICYCLES

	Southbound US-395			Westbound Dos Palmas Drive			Northbound US-395			Eastbound Dos Palmas Drive			
	Left	Thru	Right	Left	Thru	Right	Left	Thru	Right	Left	Thru	Right	
7:00 AM	0	0	0	0	0	0	0	0	0	0	0	0	0
7:15 AM	0	0	0	0	0	0	0	0	0	0	0	0	0
7:30 AM	0	0	0	0	0	0	0	0	0	0	0	0	0
7:45 AM	0	0	0	0	0	0	0	0	0	0	0	0	0
8:00 AM	0	0	0	0	0	0	0	0	0	0	0	0	0
8:15 AM	0	0	0	0	0	0	0	0	0	0	0	0	0
8:30 AM	0	0	0	0	0	0	0	0	0	0	0	0	0
8:45 AM	0	0	0	0	0	0	0	0	0	0	0	0	0
TOTAL VOLUMES:	0	0	0	0	0	0	0	0	0	0	0	0	0

	Southbound US-395			Westbound Dos Palmas Drive			Northbound US-395			Eastbound Dos Palmas Drive			
	Left	Thru	Right	Left	Thru	Right	Left	Thru	Right	Left	Thru	Right	
4:00 PM	0	0	0	0	0	0	0	0	0	0	0	0	0
4:15 PM	0	0	0	0	0	0	0	0	0	0	0	0	0
4:30 PM	0	0	0	0	0	0	0	0	0	0	0	0	0
4:45 PM	0	0	0	0	0	0	0	0	0	0	0	0	0
5:00 PM	0	0	0	0	0	0	0	0	0	0	0	0	0
5:15 PM	0	0	0	0	0	0	0	0	0	0	0	0	0
5:30 PM	0	0	0	0	1	0	0	0	0	0	0	0	1
5:45 PM	0	0	0	0	0	0	0	0	0	0	0	0	0
TOTAL VOLUMES:	0	0	0	0	1	0	0	0	0	0	0	0	1

Counts Unlimited
PO Box 1178
Corona, CA 92878
(951) 268-6268

City of Victorville
N/S: Mesa View Drive
E/W: Luna Road
Weather: Clear

File Name : 05_VIC_Mesa View_Luna AM
Site Code : 99919361
Start Date : 5/23/2019
Page No : 1

Groups Printed- Total Volume

	Mesa View Drive Southbound				Luna Road Westbound				Mesa View Drive Northbound				Luna Road Eastbound				
Start Time	Left	Thru	Right	App. Total	Left	Thru	Right	App. Total	Left	Thru	Right	App. Total	Left	Thru	Right	App. Total	Int. Total
07:00 AM	3	9	0	12	4	2	0	6	0	7	1	8	0	5	5	10	36
07:15 AM	3	15	1	19	1	1	1	3	2	17	12	31	0	6	4	10	63
07:30 AM	4	16	0	20	3	3	1	7	2	13	12	27	1	5	0	6	60
07:45 AM	8	24	3	35	4	3	3	10	1	18	24	43	2	11	1	14	102
Total	18	64	4	86	12	9	5	26	5	55	49	109	3	27	10	40	261
08:00 AM	7	19	2	28	4	5	4	13	1	17	8	26	0	3	0	3	70
08:15 AM	3	22	2	27	3	3	3	9	3	10	8	21	3	7	2	12	69
08:30 AM	3	18	2	23	3	4	1	8	0	7	3	10	0	2	4	6	47
08:45 AM	1	10	0	11	3	0	2	5	1	6	1	8	2	5	2	9	33
Total	14	69	6	89	13	12	10	35	5	40	20	65	5	17	8	30	219
Grand Total	32	133	10	175	25	21	15	61	10	95	69	174	8	44	18	70	480
Apprch %	18.3	76	5.7		41	34.4	24.6		5.7	54.6	39.7		11.4	62.9	25.7		
Total %	6.7	27.7	2.1	36.5	5.2	4.4	3.1	12.7	2.1	19.8	14.4	36.2	1.7	9.2	3.8	14.6	

	Mesa View Drive Southbound				Luna Road Westbound				Mesa View Drive Northbound				Luna Road Eastbound				
Start Time	Left	Thru	Right	App. Total	Left	Thru	Right	App. Total	Left	Thru	Right	App. Total	Left	Thru	Right	App. Total	Int. Total
Peak Hour Analysis From 07:00 AM to 08:45 AM - Peak 1 of 1																	
Peak Hour for Entire Intersection Begins at 07:30 AM																	
07:30 AM	4	16	0	20	3	3	1	7	2	13	12	27	1	5	0	6	60
07:45 AM	**8**	**24**	**3**	**35**	**4**	3	3	10	1	**18**	**24**	**43**	2	**11**	1	**14**	**102**
08:00 AM	7	19	2	28	4	**5**	**4**	**13**	1	17	8	26	0	3	0	3	70
08:15 AM	3	22	2	27	3	3	3	9	**3**	10	8	21	**3**	7	**2**	12	69
Total Volume	22	81	7	110	14	14	11	39	7	58	52	117	6	26	3	35	301
% App. Total	20	73.6	6.4		35.9	35.9	28.2		6	49.6	44.4		17.1	74.3	8.6		
PHF	.688	.844	.583	.786	.875	.700	.688	.750	.583	.806	.542	.680	.500	.591	.375	.625	.738

Counts Unlimited
PO Box 1178
Corona, CA 92878
(951) 268-6268

City of Victorville
N/S: Mesa View Drive
E/W: Luna Road
Weather: Clear

File Name : 05_VIC_Mesa View_Luna AM
Site Code : 99919361
Start Date : 5/23/2019
Page No : 2

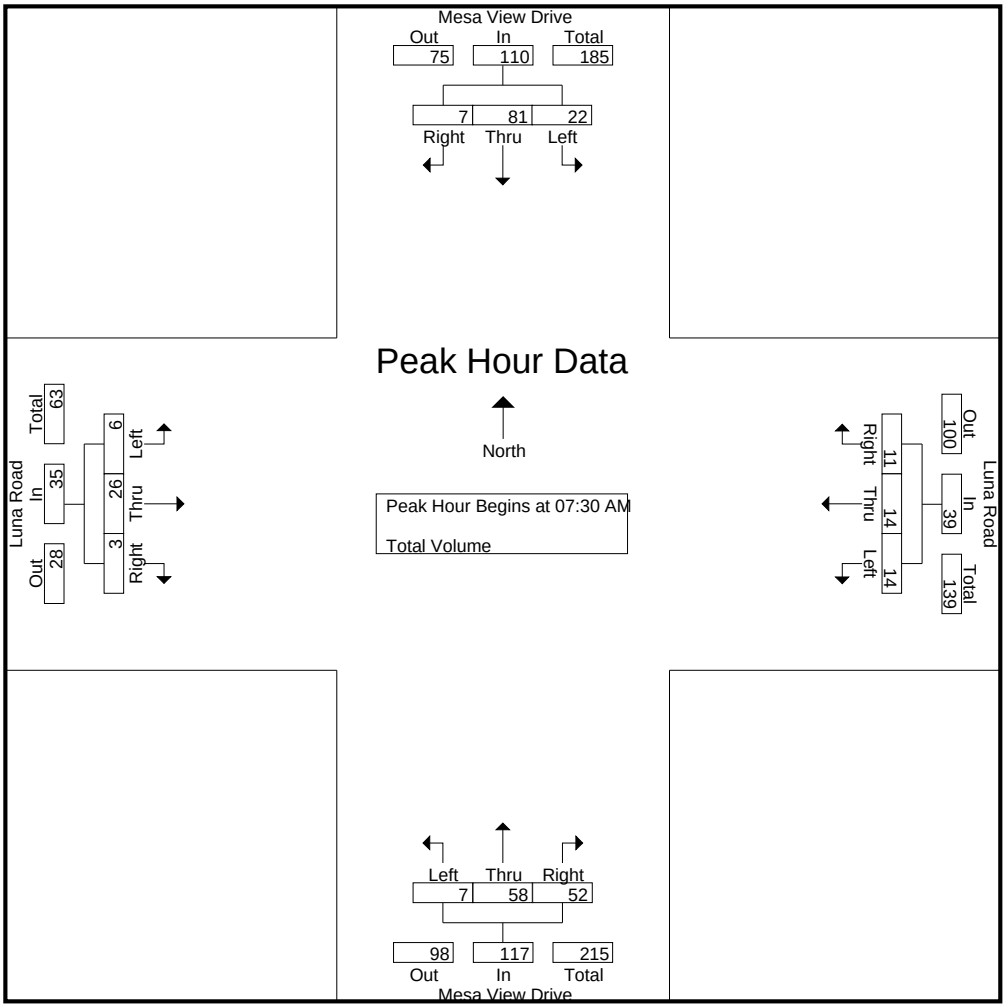

Peak Hour Analysis From 07:00 AM to 08:45 AM - Peak 1 of 1
Peak Hour for Each Approach Begins at:

	07:45 AM				07:45 AM				07:15 AM				07:00 AM			
+0 mins.	**8**	**24**	**3**	**35**	**4**	3	3	10	**2**	17	12	31	0	5	**5**	10
+15 mins.	7	19	2	28	4	**5**	**4**	**13**	2	13	12	27	0	6	4	10
+30 mins.	3	22	2	27	3	3	3	9	1	**18**	**24**	**43**	1	5	0	6
+45 mins.	3	18	2	23	3	4	1	8	1	17	8	26	**2**	**11**	1	**14**
Total Volume	21	83	9	113	14	15	11	40	6	65	56	127	3	27	10	40
% App. Total	18.6	73.5	8		35	37.5	27.5		4.7	51.2	44.1		7.5	67.5	25	
PHF	.656	.865	.750	.807	.875	.750	.688	.769	.750	.903	.583	.738	.375	.614	.500	.714

Counts Unlimited
PO Box 1178
Corona, CA 92878
(951) 268-6268

City of Victorville
N/S: Mesa View Drive
E/W: Luna Road
Weather: Clear

File Name : 05_VIC_Mesa View_Luna PM
Site Code : 99919361
Start Date : 5/23/2019
Page No : 1

Groups Printed- Total Volume

	Mesa View Drive Southbound				Luna Road Westbound				Mesa View Drive Northbound				Luna Road Eastbound				
Start Time	Left	Thru	Right	App. Total	Left	Thru	Right	App. Total	Left	Thru	Right	App. Total	Left	Thru	Right	App. Total	Int. Total
04:00 PM	3	16	4	23	2	2	4	8	4	27	7	38	3	0	1	4	73
04:15 PM	1	8	1	10	3	4	4	11	0	14	5	19	1	1	4	6	46
04:30 PM	3	7	1	11	4	4	6	14	5	14	3	22	0	2	2	4	51
04:45 PM	1	10	2	13	2	4	6	12	0	11	4	15	0	5	2	7	47
Total	8	41	8	57	11	14	20	45	9	66	19	94	4	8	9	21	217
05:00 PM	1	10	1	12	5	3	4	12	2	13	2	17	0	3	0	3	44
05:15 PM	3	11	0	14	4	3	1	8	4	16	2	22	2	5	2	9	53
05:30 PM	0	12	5	17	3	2	3	8	4	15	2	21	3	2	5	10	56
05:45 PM	1	12	3	16	1	3	4	8	2	20	2	24	2	1	0	3	51
Total	5	45	9	59	13	11	12	36	12	64	8	84	7	11	7	25	204
Grand Total	13	86	17	116	24	25	32	81	21	130	27	178	11	19	16	46	421
Apprch %	11.2	74.1	14.7		29.6	30.9	39.5		11.8	73	15.2		23.9	41.3	34.8		
Total %	3.1	20.4	4	27.6	5.7	5.9	7.6	19.2	5	30.9	6.4	42.3	2.6	4.5	3.8	10.9	

	Mesa View Drive Southbound				Luna Road Westbound				Mesa View Drive Northbound				Luna Road Eastbound				
Start Time	Left	Thru	Right	App. Total	Left	Thru	Right	App. Total	Left	Thru	Right	App. Total	Left	Thru	Right	App. Total	Int. Total
Peak Hour Analysis From 04:00 PM to 05:45 PM - Peak 1 of 1																	
Peak Hour for Entire Intersection Begins at 04:00 PM																	
04:00 PM	**3**	**16**	**4**	**23**	2	2	4	8	4	**27**	**7**	**38**	**3**	0	1	4	**73**
04:15 PM	1	8	1	10	3	**4**	4	11	0	14	5	19	1	1	**4**	6	46
04:30 PM	3	7	1	11	**4**	4	**6**	**14**	**5**	14	3	22	0	2	2	4	51
04:45 PM	1	10	2	13	2	4	6	12	0	11	4	15	0	**5**	2	**7**	47
Total Volume	8	41	8	57	11	14	20	45	9	66	19	94	4	8	9	21	217
% App. Total	14	71.9	14		24.4	31.1	44.4		9.6	70.2	20.2		19	38.1	42.9		
PHF	.667	.641	.500	.620	.688	.875	.833	.804	.450	.611	.679	.618	.333	.400	.563	.750	.743

Counts Unlimited
PO Box 1178
Corona, CA 92878
(951) 268-6268

City of Victorville
N/S: Mesa View Drive
E/W: Luna Road
Weather: Clear

File Name : 05_VIC_Mesa View_Luna PM
Site Code : 99919361
Start Date : 5/23/2019
Page No : 2

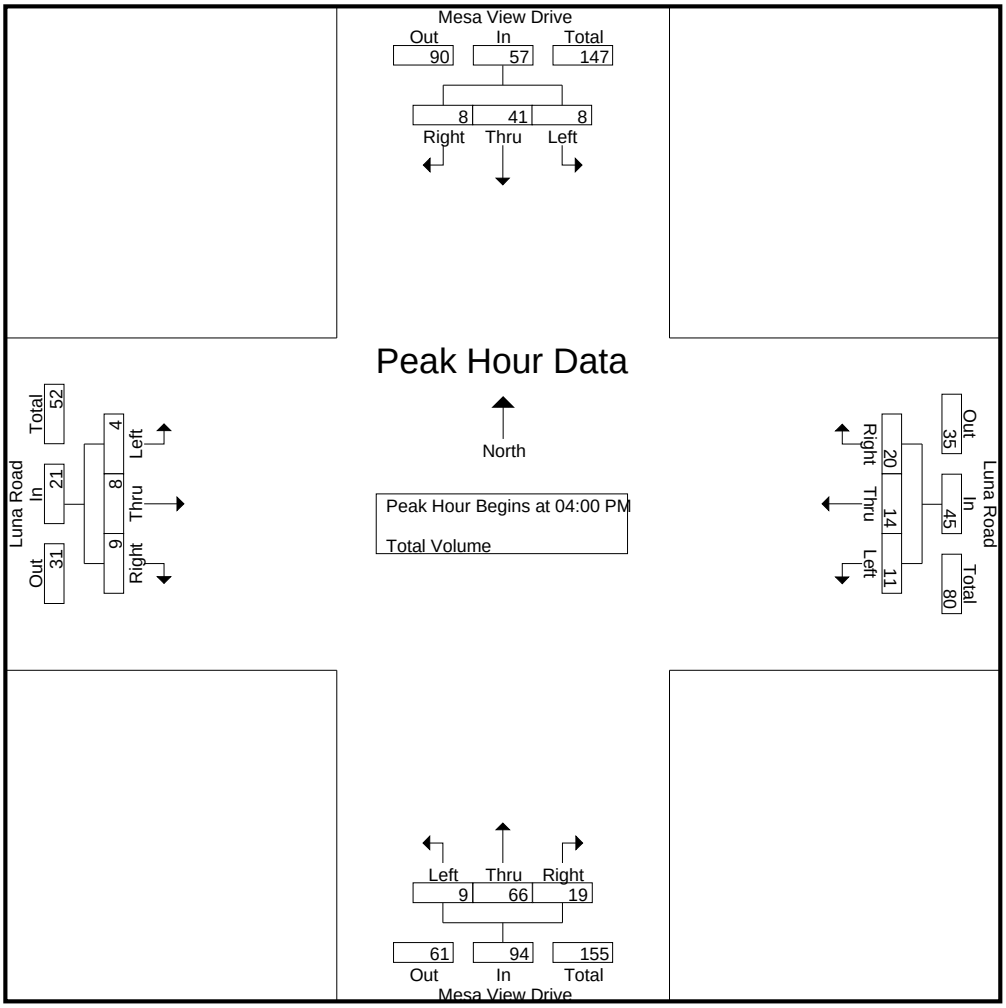

Peak Hour Analysis From 04:00 PM to 05:45 PM - Peak 1 of 1
Peak Hour for Each Approach Begins at:

	05:00 PM				04:15 PM				04:00 PM				04:45 PM			
+0 mins.	1	10	1	12	3	**4**	4	11	4	**27**	**7**	**38**	0	**5**	2	7
+15 mins.	**3**	11	0	14	4	4	**6**	**14**	0	14	5	19	0	3	0	3
+30 mins.	0	**12**	**5**	**17**	2	4	6	12	**5**	14	3	22	2	5	2	9
+45 mins.	1	12	3	16	**5**	3	4	12	0	11	4	15	**3**	2	**5**	**10**
Total Volume	5	45	9	59	14	15	20	49	9	66	19	94	5	15	9	29
% App. Total	8.5	76.3	15.3		28.6	30.6	40.8		9.6	70.2	20.2		17.2	51.7	31	
PHF	.417	.938	.450	.868	.700	.938	.833	.875	.450	.611	.679	.618	.417	.750	.450	.725

Location: Victorville
N/S: Mesa View Drive
E/W: Luna Road

Date: 5/23/2019
Day: Thursday

PEDESTRIANS

	North Leg Mesa View Drive	East Leg Luna Road	South Leg Mesa View Drive	West Leg Luna Road	
	Pedestrians	Pedestrians	Pedestrians	Pedestrians	
7:00 AM	0	0	0	0	0
7:15 AM	0	0	0	0	0
7:30 AM	0	0	0	0	0
7:45 AM	0	0	1	0	1
8:00 AM	1	0	1	0	2
8:15 AM	0	0	0	2	2
8:30 AM	0	0	1	0	1
8:45 AM	0	0	0	0	0
TOTAL VOLUMES:	1	0	3	2	6

	North Leg Mesa View Drive	East Leg Luna Road	South Leg Mesa View Drive	West Leg Luna Road	
	Pedestrians	Pedestrians	Pedestrians	Pedestrians	
4:00 PM	0	0	2	1	3
4:15 PM	0	1	0	0	1
4:30 PM	1	1	0	0	2
4:45 PM	0	0	0	0	0
5:00 PM	0	0	0	0	0
5:15 PM	0	0	0	0	0
5:30 PM	0	1	0	0	1
5:45 PM	0	0	0	0	0
TOTAL VOLUMES:	1	3	2	1	7

Location: Victorville
N/S: Mesa View Drive
E/W: Luna Road

Date: 5/23/2019
Day: Thursday

BICYCLES

	Southbound Mesa View Drive			Westbound Luna Road			Northbound Mesa View Drive			Eastbound Luna Road			
	Left	Thru	Right	Left	Thru	Right	Left	Thru	Right	Left	Thru	Right	
7:00 AM	0	0	0	0	0	0	0	0	0	0	0	0	0
7:15 AM	0	0	0	0	0	0	0	0	0	0	0	0	0
7:30 AM	0	0	0	0	0	0	0	0	0	0	0	0	0
7:45 AM	0	0	0	0	0	0	0	0	0	0	0	0	0
8:00 AM	0	0	0	0	0	0	0	0	0	0	0	0	0
8:15 AM	0	0	0	0	0	0	0	0	0	0	0	0	0
8:30 AM	0	0	0	0	0	0	0	0	0	0	0	0	0
8:45 AM	0	0	0	0	0	0	0	0	0	0	0	0	0
TOTAL VOLUMES:	0	0	0	0	0	0	0	0	0	0	0	0	0

	Southbound Mesa View Drive			Westbound Luna Road			Northbound Mesa View Drive			Eastbound Luna Road			
	Left	Thru	Right	Left	Thru	Right	Left	Thru	Right	Left	Thru	Right	
4:00 PM	0	0	0	0	0	0	0	0	0	0	0	0	0
4:15 PM	0	0	0	0	0	0	0	0	0	0	0	0	0
4:30 PM	0	0	0	0	0	0	0	0	0	0	0	0	0
4:45 PM	0	0	0	0	0	0	0	0	0	0	0	0	0
5:00 PM	0	0	0	0	0	0	0	0	0	0	0	0	0
5:15 PM	0	0	0	0	0	0	0	0	0	0	0	0	0
5:30 PM	0	0	0	0	0	0	0	0	0	0	0	0	0
5:45 PM	0	0	0	0	0	0	0	0	0	0	0	0	0
TOTAL VOLUMES:	0	0	0	0	0	0	0	0	0	0	0	0	0

Counts Unlimited, Inc.
PO Box 1178
Corona, CA 92878
951-268-6268

Counts Unlimited
PO Box 1178
Corona, CA 92878
(951) 268-6268

City of Victorville
N/S: Vista Verde Street
E/W: Luna Road
Weather: Clear

File Name : 06_VIC_Vista Verde_Luna AM
Site Code : 99919361
Start Date : 5/23/2019
Page No : 1

Groups Printed- Total Volume

	Vista Verde Street Southbound			Luna Road Westbound			Luna Road Eastbound			
Start Time	Left	Right	App. Total	Thru	Right	App. Total	Left	Thru	App. Total	Int. Total
07:00 AM	12	0	12	7	8	15	0	9	9	36
07:15 AM	15	0	15	4	10	14	5	16	21	50
07:30 AM	9	0	9	4	40	44	11	16	27	80
07:45 AM	10	2	12	9	90	99	36	14	50	161
Total	46	2	48	24	148	172	52	55	107	327
08:00 AM	18	2	20	14	33	47	9	13	22	89
08:15 AM	7	1	8	8	5	13	2	20	22	43
08:30 AM	5	1	6	8	1	9	0	6	6	21
08:45 AM	4	0	4	5	3	8	0	9	9	21
Total	34	4	38	35	42	77	11	48	59	174
Grand Total	80	6	86	59	190	249	63	103	166	501
Apprch %	93	7		23.7	76.3		38	62		
Total %	16	1.2	17.2	11.8	37.9	49.7	12.6	20.6	33.1	

	Vista Verde Street Southbound			Luna Road Westbound			Luna Road Eastbound			
Start Time	Left	Right	App. Total	Thru	Right	App. Total	Left	Thru	App. Total	Int. Total
Peak Hour Analysis From 07:00 AM to 08:45 AM - Peak 1 of 1										
Peak Hour for Entire Intersection Begins at 07:15 AM										
07:15 AM	15	0	15	4	10	14	5	**16**	21	50
07:30 AM	9	0	9	4	40	44	11	16	27	80
07:45 AM	10	**2**	12	9	**90**	**99**	**36**	14	**50**	**161**
08:00 AM	**18**	2	**20**	**14**	33	47	9	13	22	89
Total Volume	52	4	56	31	173	204	61	59	120	380
% App. Total	92.9	7.1		15.2	84.8		50.8	49.2		
PHF	.722	.500	.700	.554	.481	.515	.424	.922	.600	.590

Counts Unlimited
PO Box 1178
Corona, CA 92878
(951) 268-6268

City of Victorville
N/S: Vista Verde Street
E/W: Luna Road
Weather: Clear

File Name : 06_VIC_Vista Verde_Luna AM
Site Code : 99919361
Start Date : 5/23/2019
Page No : 2

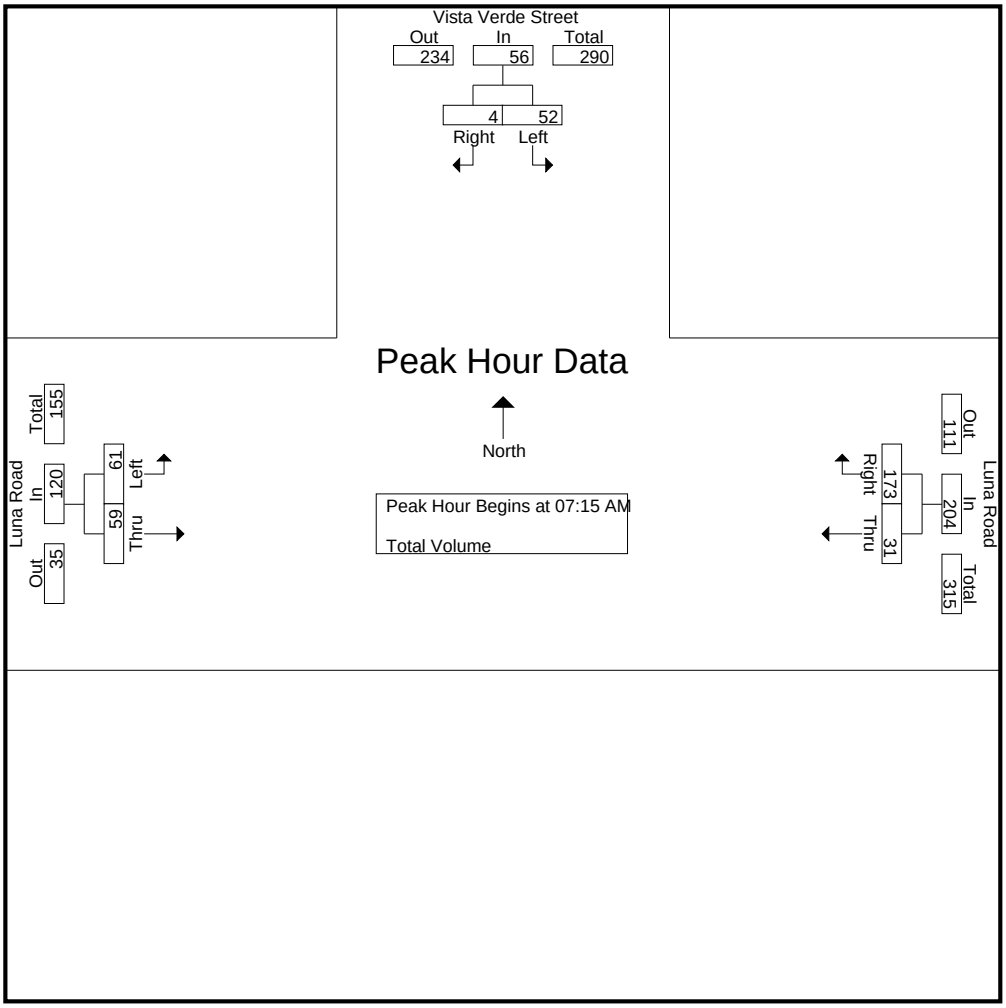

Peak Hour Analysis From 07:00 AM to 08:45 AM - Peak 1 of 1
Peak Hour for Each Approach Begins at:

	07:15 AM			07:15 AM			07:30 AM		
+0 mins.	15	0	15	4	10	14	11	16	27
+15 mins.	9	0	9	4	40	44	**36**	14	**50**
+30 mins.	10	**2**	12	9	**90**	**99**	9	13	22
+45 mins.	**18**	2	**20**	**14**	33	47	2	**20**	22
Total Volume	52	4	56	31	173	204	58	63	121
% App. Total	92.9	7.1		15.2	84.8		47.9	52.1	
PHF	.722	.500	.700	.554	.481	.515	.403	.788	.605

Counts Unlimited
PO Box 1178
Corona, CA 92878
(951) 268-6268

City of Victorville
N/S: Vista Verde Street
E/W: Luna Road
Weather: Clear

File Name : 06_VIC_Vista Verde_Luna PM
Site Code : 99919361
Start Date : 5/23/2019
Page No : 1

Groups Printed- Total Volume

	Vista Verde Street Southbound			Luna Road Westbound			Luna Road Eastbound			
Start Time	Left	Right	App. Total	Thru	Right	App. Total	Left	Thru	App. Total	Int. Total
04:00 PM	4	3	7	12	12	24	0	13	13	44
04:15 PM	10	2	12	10	9	19	4	7	11	42
04:30 PM	2	0	2	13	11	24	1	7	8	34
04:45 PM	5	1	6	12	10	22	0	15	15	43
Total	21	6	27	47	42	89	5	42	47	163
05:00 PM	5	0	5	14	15	29	0	5	5	39
05:15 PM	8	1	9	10	24	34	2	9	11	54
05:30 PM	5	1	6	9	12	21	1	10	11	38
05:45 PM	15	1	16	13	16	29	4	5	9	54
Total	33	3	36	46	67	113	7	29	36	185
Grand Total	54	9	63	93	109	202	12	71	83	348
Apprch %	85.7	14.3		46	54		14.5	85.5		
Total %	15.5	2.6	18.1	26.7	31.3	58	3.4	20.4	23.9	

	Vista Verde Street Southbound			Luna Road Westbound			Luna Road Eastbound			
Start Time	Left	Right	App. Total	Thru	Right	App. Total	Left	Thru	App. Total	Int. Total
Peak Hour Analysis From 04:00 PM to 05:45 PM - Peak 1 of 1										
Peak Hour for Entire Intersection Begins at 05:00 PM										
05:00 PM	5	0	5	**14**	15	29	0	5	5	39
05:15 PM	8	**1**	9	10	**24**	**34**	2	9	**11**	**54**
05:30 PM	5	1	6	9	12	21	1	**10**	11	38
05:45 PM	**15**	1	**16**	13	16	29	**4**	5	9	54
Total Volume	33	3	36	46	67	113	7	29	36	185
% App. Total	91.7	8.3		40.7	59.3		19.4	80.6		
PHF	.550	.750	.563	.821	.698	.831	.438	.725	.818	.856

Counts Unlimited
PO Box 1178
Corona, CA 92878
(951) 268-6268

City of Victorville
N/S: Vista Verde Street
E/W: Luna Road
Weather: Clear

File Name : 06_VIC_Vista Verde_Luna PM
Site Code : 99919361
Start Date : 5/23/2019
Page No : 2

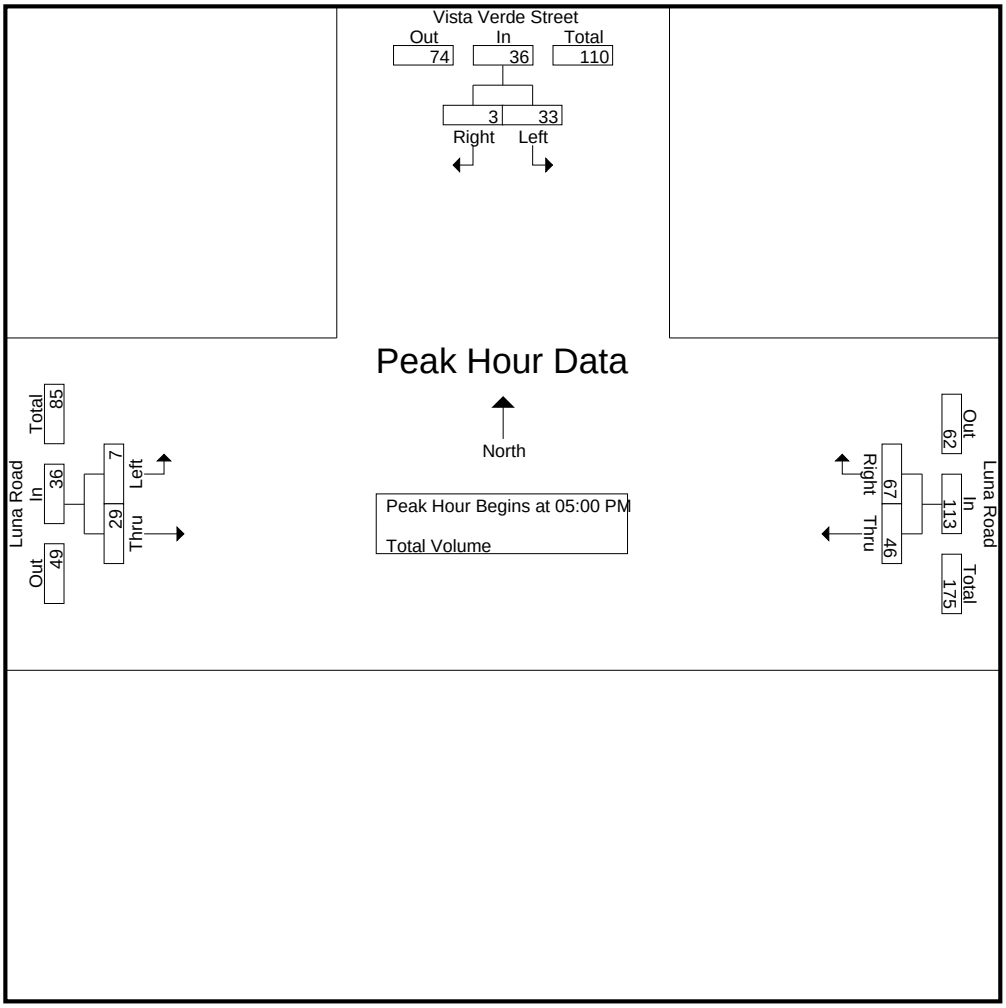

Peak Hour Analysis From 04:00 PM to 05:45 PM - Peak 1 of 1
Peak Hour for Each Approach Begins at:

	05:00 PM			05:00 PM			04:00 PM		
+0 mins.	5	0	5	**14**	15	29	0	13	13
+15 mins.	8	**1**	9	10	**24**	**34**	**4**	7	11
+30 mins.	5	1	6	9	12	21	1	7	8
+45 mins.	**15**	1	**16**	13	16	29	0	**15**	**15**
Total Volume	33	3	36	46	67	113	5	42	47
% App. Total	91.7	8.3		40.7	59.3		10.6	89.4	
PHF	.550	.750	.563	.821	.698	.831	.313	.700	.783

Location: Victorville
N/S: Vista Verde Street
E/W: Luna Road

Date: 5/23/2019
Day: Thursday

PEDESTRIANS

	North Leg Vista Verde Street	East Leg Luna Road	South Leg Dead End	West Leg Luna Road	
	Pedestrians	Pedestrians	Pedestrians	Pedestrians	
7:00 AM	0	0	0	0	0
7:15 AM	0	0	0	0	0
7:30 AM	2	0	0	2	4
7:45 AM	5	1	0	0	6
8:00 AM	1	3	0	0	4
8:15 AM	0	0	0	0	0
8:30 AM	3	0	0	0	3
8:45 AM	1	0	0	0	1
TOTAL VOLUMES:	12	4	0	2	18

	North Leg Vista Verde Street	East Leg Luna Road	South Leg Dead End	West Leg Luna Road	
	Pedestrians	Pedestrians	Pedestrians	Pedestrians	
4:00 PM	0	0	0	0	0
4:15 PM	3	0	0	0	3
4:30 PM	0	0	0	0	0
4:45 PM	0	0	0	0	0
5:00 PM	0	0	0	0	0
5:15 PM	2	0	0	0	2
5:30 PM	0	2	0	0	2
5:45 PM	1	0	0	0	1
TOTAL VOLUMES:	6	2	0	0	8

Counts Unlimited, Inc.
PO Box 1178
Corona, CA 92878
951-268-6268

Location: Victorville
N/S: Vista Verde Street
E/W: Luna Road

Date: 5/23/2019
Day: Thursday

BICYCLES

	Southbound Vista Verde Street			Westbound Luna Road			Northbound Dead End			Eastbound Luna Road			
	Left	Thru	Right	Left	Thru	Right	Left	Thru	Right	Left	Thru	Right	
7:00 AM	0	0	0	0	0	0	0	0	0	0	0	0	0
7:15 AM	0	0	0	0	0	0	0	0	0	0	0	0	0
7:30 AM	0	0	0	0	0	0	0	0	0	0	0	0	0
7:45 AM	0	0	0	0	0	0	0	0	0	0	0	0	0
8:00 AM	0	0	0	0	0	0	0	0	0	0	0	0	0
8:15 AM	0	0	0	0	0	0	0	0	0	0	0	0	0
8:30 AM	0	0	0	0	0	0	0	0	0	0	0	0	0
8:45 AM	0	0	0	0	0	0	0	0	0	0	0	0	0
TOTAL VOLUMES:	0	0	0	0	0	0	0	0	0	0	0	0	0

	Southbound Vista Verde Street			Westbound Luna Road			Northbound Dead End			Eastbound Luna Road			
	Left	Thru	Right	Left	Thru	Right	Left	Thru	Right	Left	Thru	Right	
4:00 PM	0	0	0	0	0	0	0	0	0	0	0	0	0
4:15 PM	0	0	0	0	0	0	0	0	0	0	0	0	0
4:30 PM	0	0	0	0	0	0	0	0	0	0	0	0	0
4:45 PM	0	0	0	0	0	0	0	0	0	0	0	0	0
5:00 PM	0	0	0	0	0	0	0	0	0	0	0	0	0
5:15 PM	0	0	0	0	0	0	0	0	0	0	0	0	0
5:30 PM	0	0	0	0	0	0	0	0	0	0	0	0	0
5:45 PM	0	0	0	0	0	0	0	0	0	0	0	0	0
TOTAL VOLUMES:	0	0	0	0	0	0	0	0	0	0	0	0	0

Counts Unlimited
PO Box 1178
Corona, CA 92878
(951) 268-6268

City of Victorville
N/S: Bella Pine Street
E/W: Luna Road
Weather: Clear

File Name : 07_VIC_Bella Pine_Luna AM
Site Code : 99919361
Start Date : 5/23/2019
Page No : 1

Groups Printed- Total Volume

	Bella Pine Street Southbound				Luna Road Westbound				Bella Pine Street Northbound				Luna Road Eastbound				
Start Time	Left	Thru	Right	App. Total	Left	Thru	Right	App. Total	Left	Thru	Right	App. Total	Left	Thru	Right	App. Total	Int. Total
07:00 AM	8	1	0	9	12	15	2	29	0	0	23	23	0	20	0	20	81
07:15 AM	6	3	1	10	16	12	0	28	1	1	29	31	1	29	0	30	99
07:30 AM	8	4	3	15	12	31	4	47	4	4	29	37	2	19	0	21	120
07:45 AM	13	18	17	48	11	59	3	73	24	0	22	46	1	27	1	29	196
Total	35	26	21	82	51	117	9	177	29	5	103	137	4	95	1	100	496
08:00 AM	27	25	10	62	16	28	6	50	10	2	12	24	4	25	3	32	168
08:15 AM	12	5	2	19	15	12	5	32	0	0	12	12	1	24	2	27	90
08:30 AM	5	3	1	9	6	8	2	16	1	1	19	21	1	11	0	12	58
08:45 AM	6	0	0	6	14	8	2	24	0	0	14	14	1	12	1	14	58
Total	50	33	13	96	51	56	15	122	11	3	57	71	7	72	6	85	374
Grand Total	85	59	34	178	102	173	24	299	40	8	160	208	11	167	7	185	870
Apprch %	47.8	33.1	19.1		34.1	57.9	8		19.2	3.8	76.9		5.9	90.3	3.8		
Total %	9.8	6.8	3.9	20.5	11.7	19.9	2.8	34.4	4.6	0.9	18.4	23.9	1.3	19.2	0.8	21.3	

	Bella Pine Street Southbound				Luna Road Westbound				Bella Pine Street Northbound				Luna Road Eastbound				
Start Time	Left	Thru	Right	App. Total	Left	Thru	Right	App. Total	Left	Thru	Right	App. Total	Left	Thru	Right	App. Total	Int. Total
Peak Hour Analysis From 07:00 AM to 08:45 AM - Peak 1 of 1																	
Peak Hour for Entire Intersection Begins at 07:15 AM																	
07:15 AM	6	3	1	10	**16**	12	0	28	1	1	**29**	31	1	**29**	0	30	99
07:30 AM	8	4	3	15	12	31	4	47	4	**4**	29	37	2	19	0	21	120
07:45 AM	13	18	**17**	48	11	**59**	3	**73**	**24**	0	22	**46**	1	27	1	29	**196**
08:00 AM	**27**	**25**	10	**62**	16	28	**6**	50	10	2	12	24	**4**	25	**3**	**32**	168
Total Volume	54	50	31	135	55	130	13	198	39	7	92	138	8	100	4	112	583
% App. Total	40	37	23		27.8	65.7	6.6		28.3	5.1	66.7		7.1	89.3	3.6		
PHF	.500	.500	.456	.544	.859	.551	.542	.678	.406	.438	.793	.750	.500	.862	.333	.875	.744

Counts Unlimited
PO Box 1178
Corona, CA 92878
(951) 268-6268

City of Victorville
N/S: Bella Pine Street
E/W: Luna Road
Weather: Clear

File Name : 07_VIC_Bella Pine_Luna AM
Site Code : 99919361
Start Date : 5/23/2019
Page No : 2

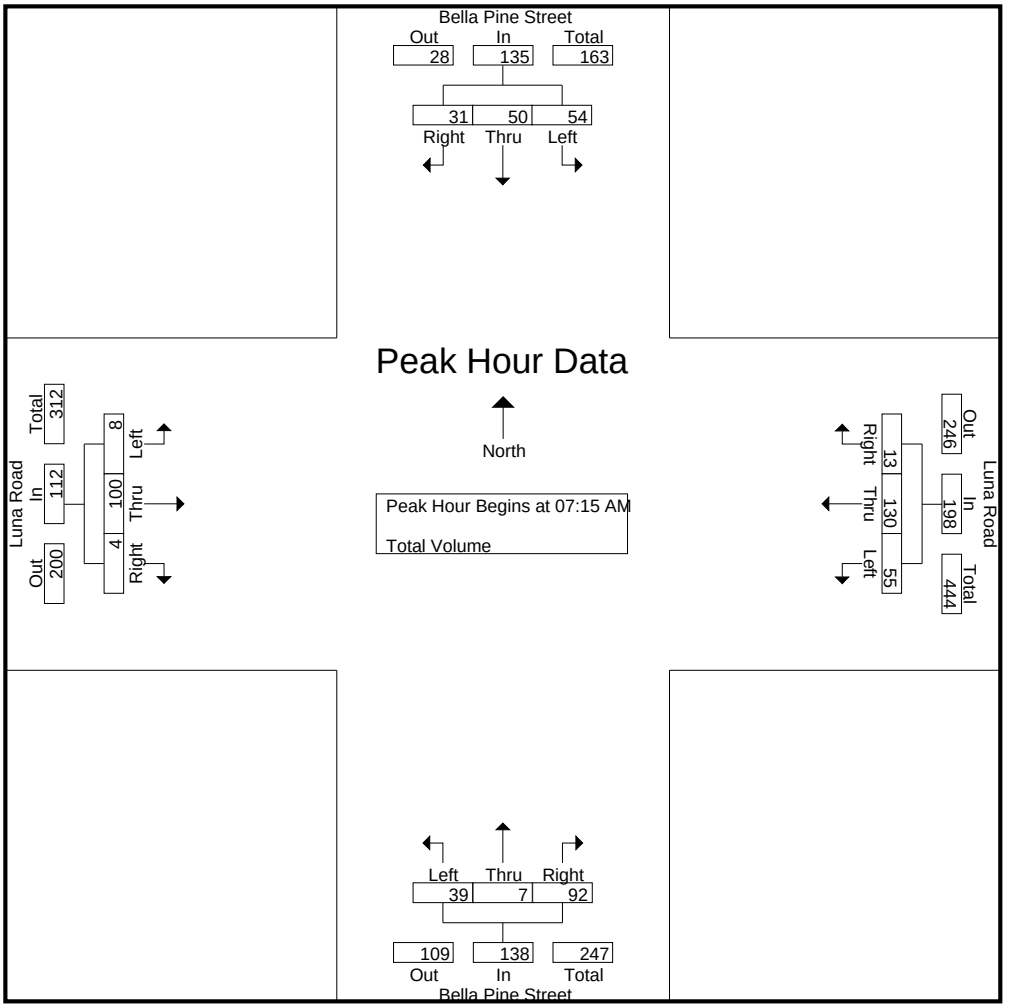

Peak Hour Analysis From 07:00 AM to 08:45 AM - Peak 1 of 1
Peak Hour for Each Approach Begins at:

	07:30 AM				07:30 AM				07:15 AM				07:15 AM			
+0 mins.	8	4	3	15	12	31	4	47	1	1	**29**	31	1	**29**	0	30
+15 mins.	13	18	**17**	48	11	**59**	3	**73**	4	**4**	29	37	2	19	0	21
+30 mins.	**27**	**25**	10	**62**	**16**	28	**6**	50	**24**	0	22	**46**	1	27	1	29
+45 mins.	12	5	2	19	15	12	5	32	10	2	12	24	**4**	25	**3**	**32**
Total Volume	60	52	32	144	54	130	18	202	39	7	92	138	8	100	4	112
% App. Total	41.7	36.1	22.2		26.7	64.4	8.9		28.3	5.1	66.7		7.1	89.3	3.6	
PHF	.556	.520	.471	.581	.844	.551	.750	.692	.406	.438	.793	.750	.500	.862	.333	.875

Counts Unlimited
PO Box 1178
Corona, CA 92878
(951) 268-6268

City of Victorville
N/S: Bella Pine Street
E/W: Luna Road
Weather: Clear

File Name : 07_VIC_Bella Pine_Luna PM
Site Code : 99919361
Start Date : 5/23/2019
Page No : 1

Groups Printed- Total Volume

	Bella Pine Street Southbound				Luna Road Westbound				Bella Pine Street Northbound				Luna Road Eastbound				
Start Time	Left	Thru	Right	App. Total	Left	Thru	Right	App. Total	Left	Thru	Right	App. Total	Left	Thru	Right	App. Total	Int. Total
04:00 PM	2	4	0	6	32	22	7	61	1	3	15	19	2	12	2	16	102
04:15 PM	8	1	2	11	24	15	3	42	0	1	12	13	2	12	0	14	80
04:30 PM	10	0	2	12	22	25	7	54	0	1	28	29	0	12	0	12	107
04:45 PM	6	1	0	7	26	22	4	52	1	0	16	17	1	19	1	21	97
Total	26	6	4	36	104	84	21	209	2	5	71	78	5	55	3	63	386
05:00 PM	10	0	0	10	22	27	6	55	1	1	12	14	1	9	0	10	89
05:15 PM	6	2	1	9	18	32	6	56	1	3	15	19	0	16	1	17	101
05:30 PM	4	3	1	8	15	19	1	35	3	0	24	27	0	11	3	14	84
05:45 PM	6	2	0	8	23	28	7	58	2	0	18	20	0	19	2	21	107
Total	26	7	2	35	78	106	20	204	7	4	69	80	1	55	6	62	381
Grand Total	52	13	6	71	182	190	41	413	9	9	140	158	6	110	9	125	767
Apprch %	73.2	18.3	8.5		44.1	46	9.9		5.7	5.7	88.6		4.8	88	7.2		
Total %	6.8	1.7	0.8	9.3	23.7	24.8	5.3	53.8	1.2	1.2	18.3	20.6	0.8	14.3	1.2	16.3	

	Bella Pine Street Southbound				Luna Road Westbound				Bella Pine Street Northbound				Luna Road Eastbound				
Start Time	Left	Thru	Right	App. Total	Left	Thru	Right	App. Total	Left	Thru	Right	App. Total	Left	Thru	Right	App. Total	Int. Total
Peak Hour Analysis From 04:00 PM to 05:45 PM - Peak 1 of 1																	
Peak Hour for Entire Intersection Begins at 04:30 PM																	
04:30 PM	**10**	0	**2**	**12**	22	25	**7**	54	0	1	**28**	**29**	0	12	0	12	**107**
04:45 PM	6	1	0	7	**26**	22	4	52	**1**	0	16	17	**1**	**19**	**1**	**21**	97
05:00 PM	10	0	0	10	22	27	6	55	1	1	12	14	1	9	0	10	89
05:15 PM	6	**2**	1	9	18	**32**	6	**56**	1	**3**	15	19	0	16	1	17	101
Total Volume	32	3	3	38	88	106	23	217	3	5	71	79	2	56	2	60	394
% App. Total	84.2	7.9	7.9		40.6	48.8	10.6		3.8	6.3	89.9		3.3	93.3	3.3		
PHF	.800	.375	.375	.792	.846	.828	.821	.969	.750	.417	.634	.681	.500	.737	.500	.714	.921

Counts Unlimited
PO Box 1178
Corona, CA 92878
(951) 268-6268

City of Victorville
N/S: Bella Pine Street
E/W: Luna Road
Weather: Clear

File Name : 07_VIC_Bella Pine_Luna PM
Site Code : 99919361
Start Date : 5/23/2019
Page No : 2

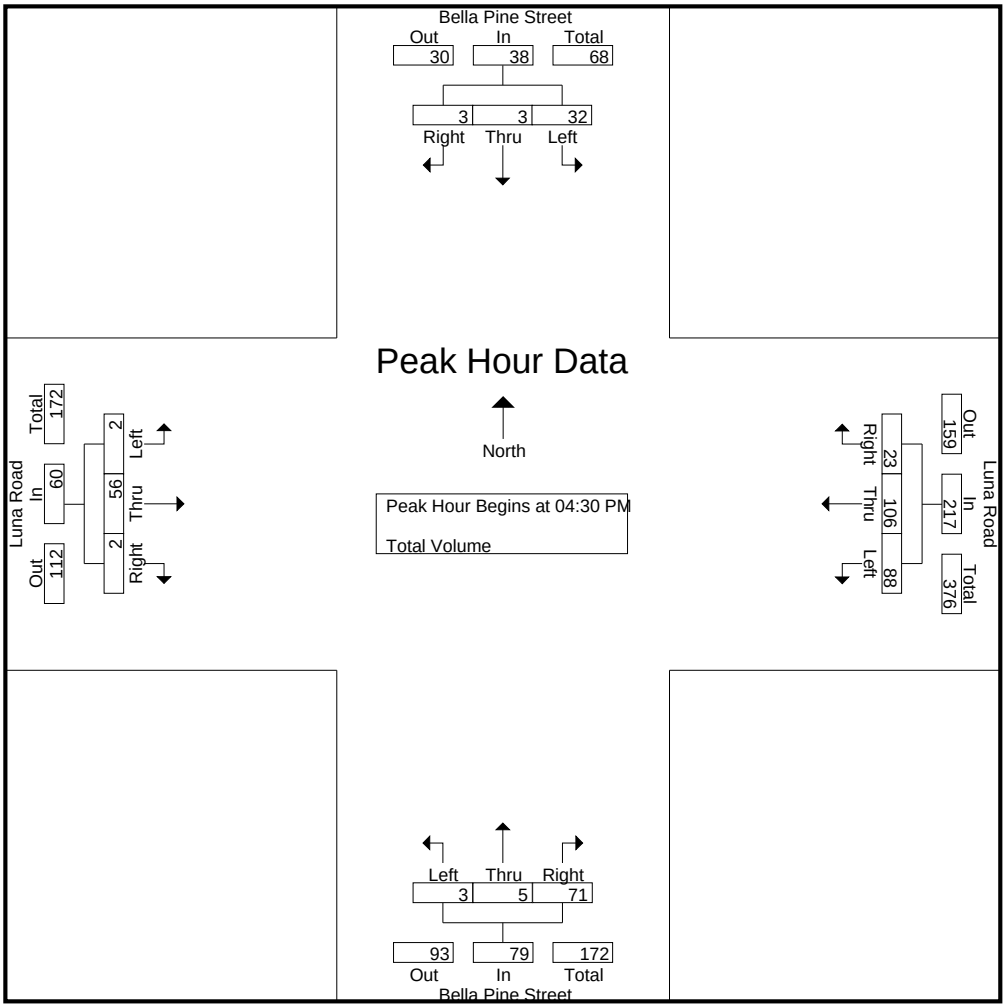

Peak Hour Analysis From 04:00 PM to 05:45 PM - Peak 1 of 1
Peak Hour for Each Approach Begins at:

	04:15 PM				04:30 PM				05:00 PM				04:00 PM			
+0 mins.	8	**1**	**2**	11	22	25	**7**	54	1	1	12	14	**2**	12	**2**	16
+15 mins.	**10**	0	2	**12**	**26**	22	4	52	1	**3**	15	19	2	12	0	14
+30 mins.	6	1	0	7	22	27	6	55	**3**	0	**24**	**27**	0	12	0	12
+45 mins.	10	0	0	10	18	**32**	6	**56**	2	0	18	20	1	**19**	1	**21**
Total Volume	34	2	4	40	88	106	23	217	7	4	69	80	5	55	3	63
% App. Total	85	5	10		40.6	48.8	10.6		8.8	5	86.2		7.9	87.3	4.8	
PHF	.850	.500	.500	.833	.846	.828	.821	.969	.583	.333	.719	.741	.625	.724	.375	.750

Location: Victorville
N/S: Bella Pine Street
E/W: Luna Road

Date: 5/23/2019
Day: Thursday

PEDESTRIANS

	North Leg Bella Pine Street Pedestrians	East Leg Luna Road Pedestrians	South Leg Bella Pine Street Pedestrians	West Leg Luna Road Pedestrians	
7:00 AM	0	0	0	1	1
7:15 AM	0	0	0	0	0
7:30 AM	0	1	0	2	3
7:45 AM	0	1	0	4	5
8:00 AM	0	0	0	1	1
8:15 AM	0	0	0	0	0
8:30 AM	1	0	0	0	1
8:45 AM	1	0	0	0	1
TOTAL VOLUMES:	2	2	0	8	12

	North Leg Bella Pine Street Pedestrians	East Leg Luna Road Pedestrians	South Leg Bella Pine Street Pedestrians	West Leg Luna Road Pedestrians	
4:00 PM	0	0	0	0	0
4:15 PM	1	0	0	0	1
4:30 PM	0	0	0	0	0
4:45 PM	0	0	0	0	0
5:00 PM	0	0	0	0	0
5:15 PM	2	0	0	0	2
5:30 PM	1	0	0	0	1
5:45 PM	0	0	0	1	1
TOTAL VOLUMES:	4	0	0	1	5

Location: Victorville
N/S: Bella Pine Street
E/W: Luna Road

Date: 5/23/2019
Day: Thursday

BICYCLES

	Southbound Bella Pine Street			Westbound Luna Road			Northbound Bella Pine Street			Eastbound Luna Road			
	Left	Thru	Right	Left	Thru	Right	Left	Thru	Right	Left	Thru	Right	
7:00 AM	0	0	0	0	0	0	0	0	0	0	0	0	0
7:15 AM	0	0	0	0	0	0	0	0	0	0	0	0	0
7:30 AM	0	0	0	0	0	0	0	0	0	0	0	0	0
7:45 AM	0	0	0	0	0	0	0	0	0	0	0	0	0
8:00 AM	0	0	0	0	0	0	0	0	0	0	0	0	0
8:15 AM	0	0	0	0	0	0	0	0	0	0	0	0	0
8:30 AM	0	0	0	0	0	0	0	0	0	0	0	0	0
8:45 AM	0	0	0	0	0	0	0	0	0	0	0	0	0
TOTAL VOLUMES:	0	0	0	0	0	0	0	0	0	0	0	0	0

	Southbound Bella Pine Street			Westbound Luna Road			Northbound Bella Pine Street			Eastbound Luna Road			
	Left	Thru	Right	Left	Thru	Right	Left	Thru	Right	Left	Thru	Right	
4:00 PM	0	0	0	0	0	0	0	0	0	0	0	0	0
4:15 PM	0	0	0	0	0	0	0	0	0	0	0	0	0
4:30 PM	0	0	0	0	0	0	0	0	0	0	0	0	0
4:45 PM	0	0	0	0	0	0	0	0	0	0	0	0	0
5:00 PM	0	0	0	0	0	0	0	0	0	0	0	0	0
5:15 PM	0	0	0	0	0	0	0	0	0	0	0	0	0
5:30 PM	0	0	0	0	0	0	0	0	0	0	0	0	0
5:45 PM	0	0	0	0	0	0	0	0	0	0	0	0	0
TOTAL VOLUMES:	0	0	0	0	0	0	0	0	0	0	0	0	0

Counts Unlimited
PO Box 1178
Corona, CA 92878
(951) 268-6268

City of Victorville
N/S: US-395
E/W: Luna Road
Weather: Clear

File Name : 08_VIC_US-395_Luna AM
Site Code : 99919361
Start Date : 5/23/2019
Page No : 1

Groups Printed- Total Volume

	US-395 Southbound				Luna Road Westbound				US-395 Northbound				Luna Road Eastbound				
Start Time	Left	Thru	Right	App. Total	Left	Thru	Right	App. Total	Left	Thru	Right	App. Total	Left	Thru	Right	App. Total	Int. Total
07:00 AM	16	203	14	233	16	8	26	50	6	142	8	156	7	25	17	49	488
07:15 AM	9	180	10	199	11	16	21	48	6	175	6	187	22	32	15	69	503
07:30 AM	27	172	22	221	23	15	38	76	11	189	18	218	14	31	11	56	571
07:45 AM	50	124	26	200	26	40	40	106	10	173	11	194	16	21	16	53	553
Total	102	679	72	853	76	79	125	280	33	679	43	755	59	109	59	227	2115
08:00 AM	64	133	15	212	21	25	51	97	9	120	9	138	15	31	21	67	514
08:15 AM	64	105	13	182	17	18	66	101	4	127	9	140	10	29	9	48	471
08:30 AM	45	135	9	189	21	7	50	78	6	127	10	143	10	17	11	38	448
08:45 AM	34	96	13	143	14	8	47	69	3	111	6	120	13	12	10	35	367
Total	207	469	50	726	73	58	214	345	22	485	34	541	48	89	51	188	1800
Grand Total	309	1148	122	1579	149	137	339	625	55	1164	77	1296	107	198	110	415	3915
Apprch %	19.6	72.7	7.7		23.8	21.9	54.2		4.2	89.8	5.9		25.8	47.7	26.5		
Total %	7.9	29.3	3.1	40.3	3.8	3.5	8.7	16	1.4	29.7	2	33.1	2.7	5.1	2.8	10.6	

	US-395 Southbound				Luna Road Westbound				US-395 Northbound				Luna Road Eastbound				
Start Time	Left	Thru	Right	App. Total	Left	Thru	Right	App. Total	Left	Thru	Right	App. Total	Left	Thru	Right	App. Total	Int. Total
Peak Hour Analysis From 07:00 AM to 08:45 AM - Peak 1 of 1																	
Peak Hour for Entire Intersection Begins at 07:15 AM																	
07:15 AM	9	**180**	10	199	11	16	21	48	6	175	6	187	**22**	**32**	15	**69**	503
07:30 AM	27	172	22	**221**	23	15	38	76	**11**	**189**	**18**	**218**	14	31	11	56	**571**
07:45 AM	50	124	**26**	200	**26**	**40**	40	**106**	10	173	11	194	16	21	16	53	553
08:00 AM	**64**	133	15	212	21	25	**51**	97	9	120	9	138	15	31	**21**	67	514
Total Volume	150	609	73	832	81	96	150	327	36	657	44	737	67	115	63	245	2141
% App. Total	18	73.2	8.8		24.8	29.4	45.9		4.9	89.1	6		27.3	46.9	25.7		
PHF	.586	.846	.702	.941	.779	.600	.735	.771	.818	.869	.611	.845	.761	.898	.750	.888	.937

Counts Unlimited
PO Box 1178
Corona, CA 92878
(951) 268-6268

City of Victorville
N/S: US-395
E/W: Luna Road
Weather: Clear

File Name : 08_VIC_US-395_Luna AM
Site Code : 99919361
Start Date : 5/23/2019
Page No : 2

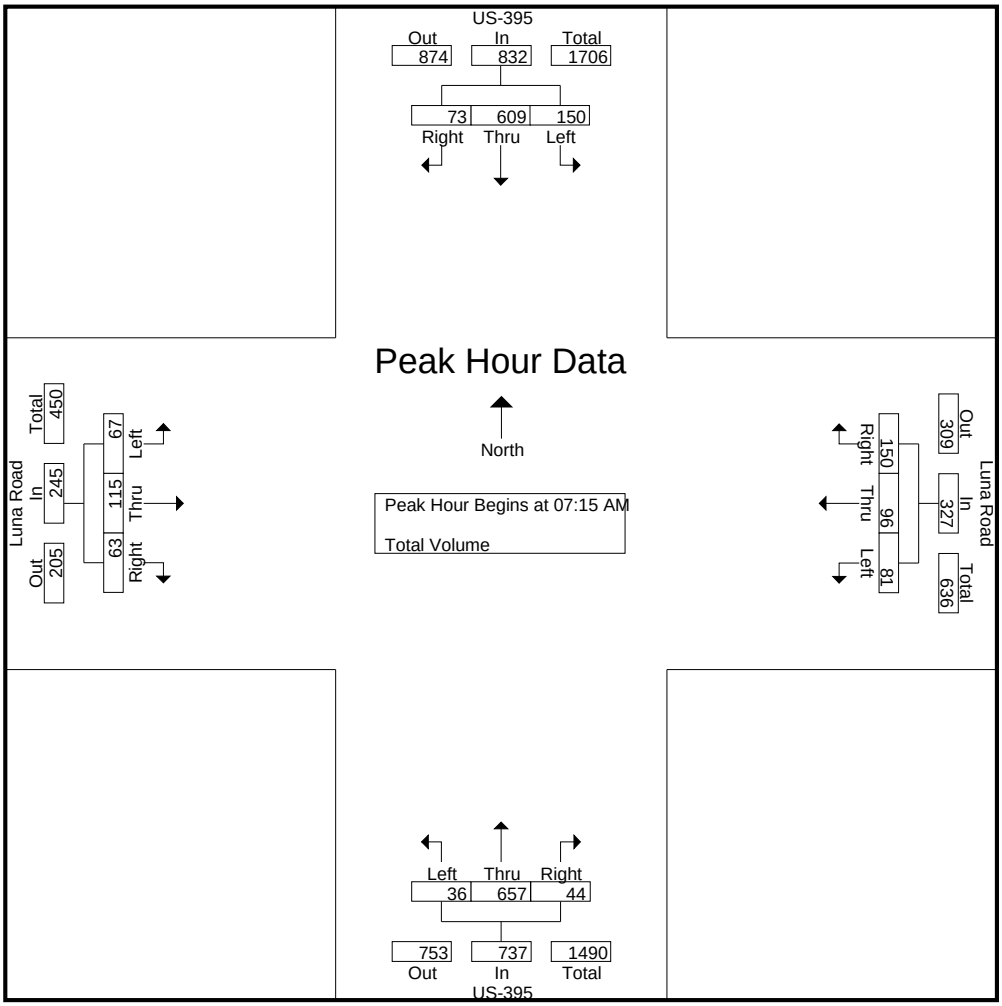

Peak Hour Analysis From 07:00 AM to 08:45 AM - Peak 1 of 1
Peak Hour for Each Approach Begins at:

	07:00 AM				07:45 AM				07:00 AM				07:15 AM			
+0 mins.	16	**203**	14	**233**	**26**	**40**	40	**106**	6	142	8	156	**22**	**32**	15	**69**
+15 mins.	9	180	10	199	21	25	51	97	6	175	6	187	14	31	11	56
+30 mins.	27	172	22	221	17	18	**66**	101	**11**	**189**	**18**	**218**	16	21	16	53
+45 mins.	**50**	124	**26**	200	21	7	50	78	10	173	11	194	15	31	**21**	67
Total Volume	102	679	72	853	85	90	207	382	33	679	43	755	67	115	63	245
% App. Total	12	79.6	8.4		22.3	23.6	54.2		4.4	89.9	5.7		27.3	46.9	25.7	
PHF	.510	.836	.692	.915	.817	.563	.784	.901	.750	.898	.597	.866	.761	.898	.750	.888

Counts Unlimited
PO Box 1178
Corona, CA 92878
(951) 268-6268

City of Victorville
N/S: US-395
E/W: Luna Road
Weather: Clear

File Name : 08_VIC_US-395_Luna PM
Site Code : 99919361
Start Date : 5/23/2019
Page No : 1

Groups Printed- Total Volume

	US-395 Southbound				Luna Road Westbound				US-395 Northbound				Luna Road Eastbound				
Start Time	Left	Thru	Right	App. Total	Left	Thru	Right	App. Total	Left	Thru	Right	App. Total	Left	Thru	Right	App. Total	Int. Total
04:00 PM	49	176	26	251	15	28	45	88	11	179	12	202	8	15	8	31	572
04:15 PM	57	166	14	237	9	21	39	69	10	193	21	224	8	18	8	34	564
04:30 PM	64	189	20	273	12	21	42	75	15	179	15	209	18	16	12	46	603
04:45 PM	53	165	21	239	4	20	47	71	13	187	18	218	6	20	13	39	567
Total	223	696	81	1000	40	90	173	303	49	738	66	853	40	69	41	150	2306
05:00 PM	47	181	19	247	9	24	43	76	15	187	13	215	7	18	7	32	570
05:15 PM	39	159	16	214	9	19	51	79	18	237	11	266	16	23	9	48	607
05:30 PM	52	153	12	217	8	15	43	66	13	188	13	214	18	7	5	30	527
05:45 PM	55	181	22	258	7	26	52	85	12	182	15	209	12	22	7	41	593
Total	193	674	69	936	33	84	189	306	58	794	52	904	53	70	28	151	2297
Grand Total	416	1370	150	1936	73	174	362	609	107	1532	118	1757	93	139	69	301	4603
Apprch %	21.5	70.8	7.7		12	28.6	59.4		6.1	87.2	6.7		30.9	46.2	22.9		
Total %	9	29.8	3.3	42.1	1.6	3.8	7.9	13.2	2.3	33.3	2.6	38.2	2	3	1.5	6.5	

	US-395 Southbound				Luna Road Westbound				US-395 Northbound				Luna Road Eastbound				
Start Time	Left	Thru	Right	App. Total	Left	Thru	Right	App. Total	Left	Thru	Right	App. Total	Left	Thru	Right	App. Total	Int. Total
Peak Hour Analysis From 04:00 PM to 05:45 PM - Peak 1 of 1																	
Peak Hour for Entire Intersection Begins at 04:30 PM																	
04:30 PM	**64**	**189**	20	**273**	**12**	21	42	75	15	179	15	209	**18**	16	12	46	603
04:45 PM	53	165	**21**	239	4	20	47	71	13	187	**18**	218	6	20	**13**	39	567
05:00 PM	47	181	19	247	9	**24**	43	76	15	187	13	215	7	18	7	32	570
05:15 PM	39	159	16	214	9	19	**51**	**79**	**18**	**237**	11	**266**	16	**23**	9	**48**	**607**
Total Volume	203	694	76	973	34	84	183	301	61	790	57	908	47	77	41	165	2347
% App. Total	20.9	71.3	7.8		11.3	27.9	60.8		6.7	87	6.3		28.5	46.7	24.8		
PHF	.793	.918	.905	.891	.708	.875	.897	.953	.847	.833	.792	.853	.653	.837	.788	.859	.967

Counts Unlimited
PO Box 1178
Corona, CA 92878
(951) 268-6268

City of Victorville
N/S: US-395
E/W: Luna Road
Weather: Clear

File Name : 08_VIC_US-395_Luna PM
Site Code : 99919361
Start Date : 5/23/2019
Page No : 2

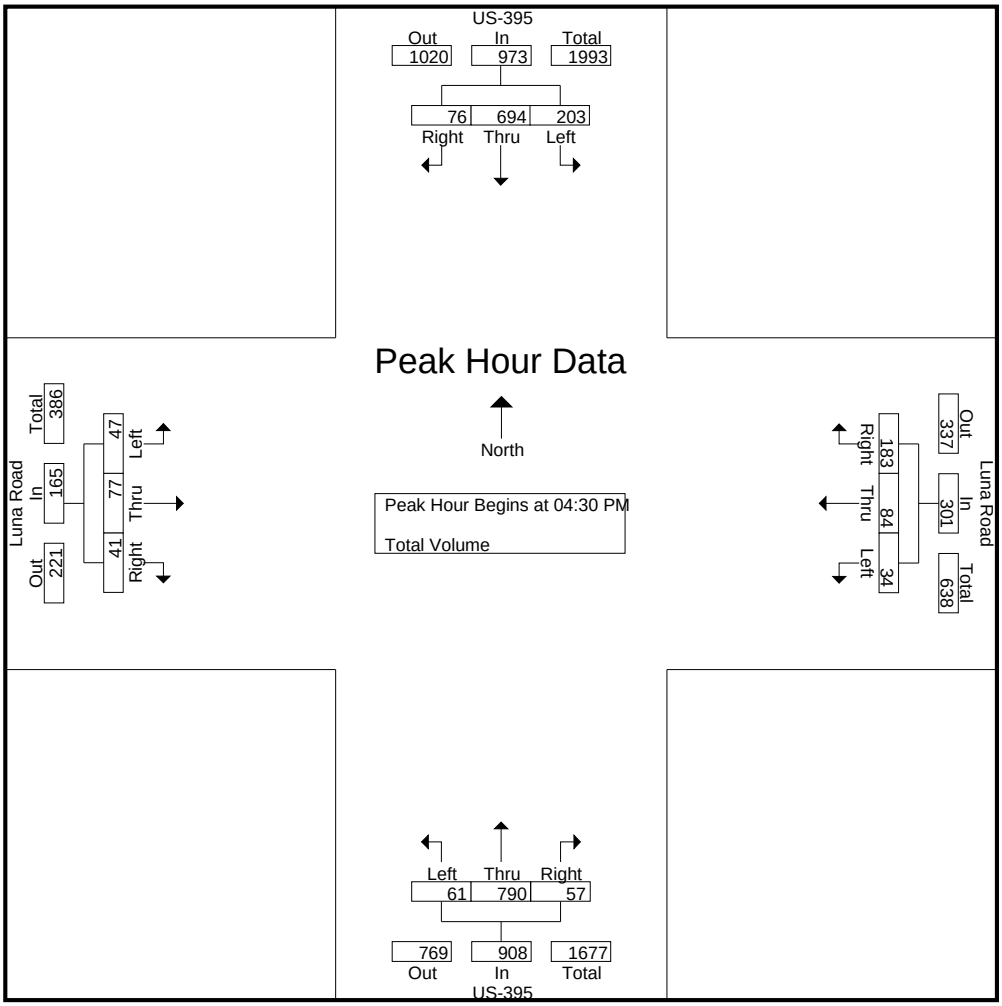

Peak Hour Analysis From 04:00 PM to 05:45 PM - Peak 1 of 1
Peak Hour for Each Approach Begins at:

	04:00 PM				05:00 PM				04:45 PM				04:30 PM			
+0 mins.	49	176	**26**	251	**9**	24	43	76	13	187	**18**	218	**18**	16	12	46
+15 mins.	57	166	14	237	9	19	51	79	15	187	13	215	6	20	**13**	39
+30 mins.	**64**	**189**	20	**273**	8	15	43	66	**18**	**237**	11	**266**	7	18	7	32
+45 mins.	53	165	21	239	7	**26**	**52**	**85**	13	188	13	214	16	**23**	9	**48**
Total Volume	223	696	81	1000	33	84	189	306	59	799	55	913	47	77	41	165
% App. Total	22.3	69.6	8.1		10.8	27.5	61.8		6.5	87.5	6		28.5	46.7	24.8	
PHF	.871	.921	.779	.916	.917	.808	.909	.900	.819	.843	.764	.858	.653	.837	.788	.859

Location: Victorville
N/S: US-395
E/W: Luna Road

Date: 5/23/2019
Day: Thursday

PEDESTRIANS

	North Leg US-395	East Leg Luna Road	South Leg US-395	West Leg Luna Road	
	Pedestrians	Pedestrians	Pedestrians	Pedestrians	
7:00 AM	0	0	0	0	0
7:15 AM	0	0	0	0	0
7:30 AM	1	0	0	0	1
7:45 AM	0	0	0	0	0
8:00 AM	1	0	0	1	2
8:15 AM	0	1	0	0	1
8:30 AM	0	0	0	0	0
8:45 AM	0	0	0	0	0
TOTAL VOLUMES:	2	1	0	1	4

	North Leg US-395	East Leg Luna Road	South Leg US-395	West Leg Luna Road	
	Pedestrians	Pedestrians	Pedestrians	Pedestrians	
4:00 PM	0	0	0	0	0
4:15 PM	0	0	0	0	0
4:30 PM	0	0	0	0	0
4:45 PM	0	2	0	0	2
5:00 PM	2	2	0	0	4
5:15 PM	1	0	0	0	1
5:30 PM	3	1	0	0	4
5:45 PM	1	2	0	0	3
TOTAL VOLUMES:	7	7	0	0	14

Counts Unlimited, Inc.
PO Box 1178
Corona, CA 92878
951-268-6268

Location: Victorville
N/S: US-395
E/W: Luna Road

Date: 5/23/2019
Day: Thursday

BICYCLES

	Southbound US-395			Westbound Luna Road			Northbound US-395			Eastbound Luna Road			
	Left	Thru	Right	Left	Thru	Right	Left	Thru	Right	Left	Thru	Right	
7:00 AM	0	0	0	0	0	0	0	0	0	0	0	0	0
7:15 AM	0	0	0	0	0	0	0	0	0	0	0	0	0
7:30 AM	0	0	0	0	0	0	0	0	0	0	0	0	0
7:45 AM	0	0	0	0	0	0	0	0	0	0	0	0	0
8:00 AM	0	0	0	0	0	0	0	0	0	0	0	0	0
8:15 AM	0	0	0	0	0	0	0	0	0	0	0	0	0
8:30 AM	0	0	0	0	0	0	0	0	0	0	0	0	0
8:45 AM	0	0	0	0	0	0	0	0	0	0	0	0	0
TOTAL VOLUMES:	0	0	0	0	0	0	0	0	0	0	0	0	0

	Southbound US-395			Westbound Luna Road			Northbound US-395			Eastbound Luna Road			
	Left	Thru	Right	Left	Thru	Right	Left	Thru	Right	Left	Thru	Right	
4:00 PM	0	0	0	0	0	0	0	0	0	0	0	0	0
4:15 PM	0	0	0	0	0	0	0	0	0	0	0	0	0
4:30 PM	0	0	0	0	0	0	0	0	0	0	0	0	0
4:45 PM	0	0	0	0	0	0	0	0	0	0	0	0	0
5:00 PM	0	0	0	0	0	0	0	0	0	0	0	0	0
5:15 PM	0	0	0	0	0	0	0	0	0	0	0	0	0
5:30 PM	0	0	0	0	0	0	0	0	0	0	0	0	0
5:45 PM	0	0	0	0	0	0	0	0	0	0	0	0	0
TOTAL VOLUMES:	0	0	0	0	0	0	0	0	0	0	0	0	0

Counts Unlimited, Inc.
PO Box 1178
Corona, CA 92878
951-268-6268

Counts Unlimited
PO Box 1178
Corona, CA 92878
(951) 268-6268

City of Victorville
N/S: Mesa View Drive
E/W: Fern Haven Street
Weather: Clear

File Name : 09_VIC_Mesa View_Fern Haven AM
Site Code : 99919361
Start Date : 5/23/2019
Page No : 1

Groups Printed- Total Volume

	Mesa View Drive Southbound			Mesa View Drive Northbound			Fern Haven Street Eastbound			
Start Time	Thru	Right	App. Total	Left	Thru	App. Total	Left	Right	App. Total	Int. Total
07:00 AM	14	0	14	0	5	5	0	2	2	21
07:15 AM	7	0	7	0	2	2	0	0	0	9
07:30 AM	13	0	13	0	14	14	0	0	0	27
07:45 AM	7	0	7	0	16	16	2	0	2	25
Total	41	0	41	0	37	37	2	2	4	82
08:00 AM	13	1	14	0	7	7	2	0	2	23
08:15 AM	8	0	8	0	18	18	0	0	0	26
08:30 AM	16	1	17	0	18	18	1	0	1	36
08:45 AM	8	1	9	0	23	23	2	0	2	34
Total	45	3	48	0	66	66	5	0	5	119
Grand Total	86	3	89	0	103	103	7	2	9	201
Apprch %	96.6	3.4		0	100		77.8	22.2		
Total %	42.8	1.5	44.3	0	51.2	51.2	3.5	1	4.5	

	Mesa View Drive Southbound			Mesa View Drive Northbound			Fern Haven Street Eastbound			
Start Time	Thru	Right	App. Total	Left	Thru	App. Total	Left	Right	App. Total	Int. Total
Peak Hour Analysis From 07:00 AM to 08:45 AM - Peak 1 of 1										
Peak Hour for Entire Intersection Begins at 08:00 AM										
08:00 AM	13	**1**	14	0	7	7	**2**	0	**2**	23
08:15 AM	8	0	8	0	18	18	0	0	0	26
08:30 AM	**16**	1	**17**	0	18	18	1	0	1	**36**
08:45 AM	8	1	9	0	**23**	**23**	2	0	2	34
Total Volume	45	3	48	0	66	66	5	0	5	119
% App. Total	93.8	6.2		0	100		100	0		
PHF	.703	.750	.706	.000	.717	.717	.625	.000	.625	.826

Counts Unlimited
PO Box 1178
Corona, CA 92878
(951) 268-6268

City of Victorville
N/S: Mesa View Drive
E/W: Fern Haven Street
Weather: Clear

File Name : 09_VIC_Mesa View_Fern Haven AM
Site Code : 99919361
Start Date : 5/23/2019
Page No : 2

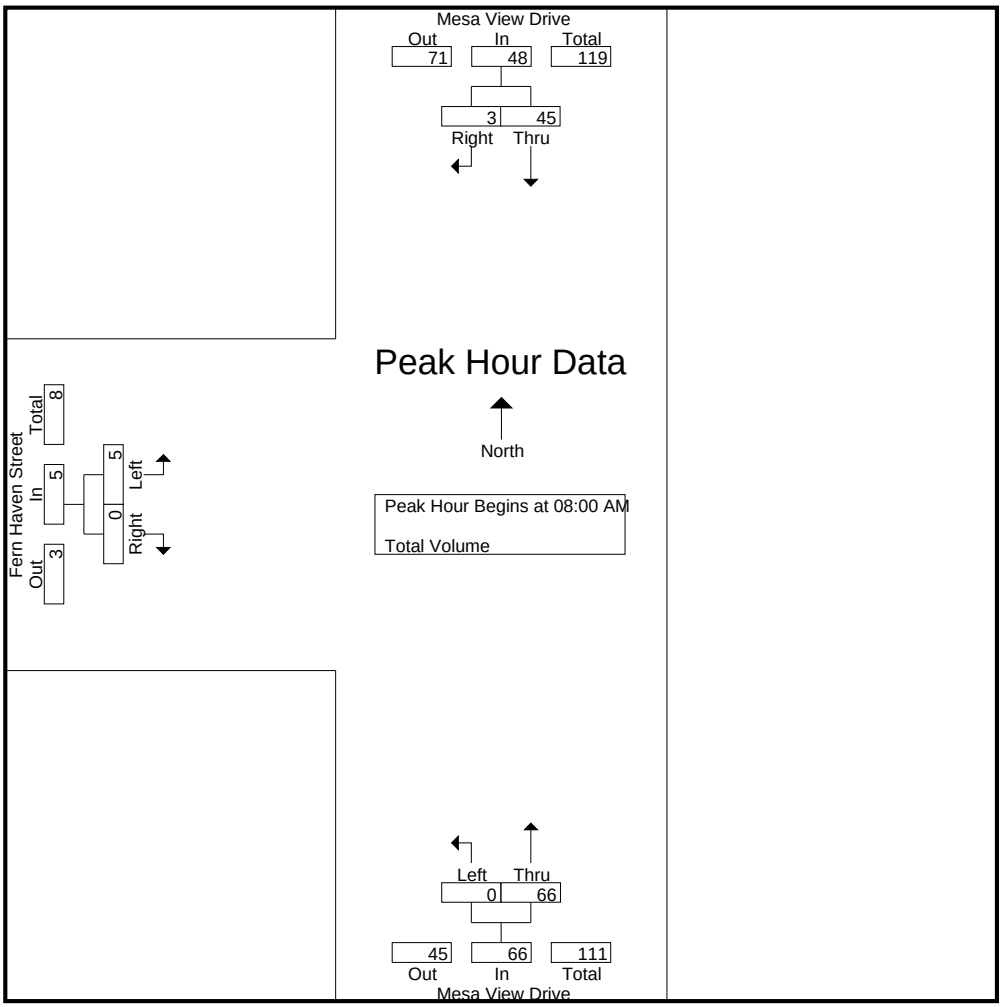

Peak Hour Analysis From 07:00 AM to 08:45 AM - Peak 1 of 1
Peak Hour for Each Approach Begins at:

	08:00 AM			08:00 AM			07:45 AM		
+0 mins.	13	**1**	14	0	7	7	**2**	0	**2**
+15 mins.	8	0	8	0	18	18	2	0	2
+30 mins.	**16**	1	**17**	0	18	18	0	0	0
+45 mins.	8	1	9	0	**23**	**23**	1	0	1
Total Volume	45	3	48	0	66	66	5	0	5
% App. Total	93.8	6.2		0	100		100	0	
PHF	.703	.750	.706	.000	.717	.717	.625	.000	.625

Counts Unlimited
PO Box 1178
Corona, CA 92878
(951) 268-6268

City of Victorville
N/S: Mesa View Drive
E/W: Fern Haven Street
Weather: Clear

File Name : 09_VIC_Mesa View_Fern Haven PM
Site Code : 99919361
Start Date : 5/23/2019
Page No : 1

Groups Printed- Total Volume

	Mesa View Drive Southbound			Mesa View Drive Northbound			Fern Haven Street Eastbound			
Start Time	Thru	Right	App. Total	Left	Thru	App. Total	Left	Right	App. Total	Int. Total
04:00 PM	13	3	16	1	30	31	3	0	3	50
04:15 PM	11	1	12	0	17	17	1	0	1	30
04:30 PM	10	4	14	0	22	22	4	0	4	40
04:45 PM	5	7	12	0	22	22	1	0	1	35
Total	39	15	54	1	91	92	9	0	9	155
05:00 PM	15	5	20	0	20	20	3	0	3	43
05:15 PM	9	1	10	2	12	14	2	0	2	26
05:30 PM	18	1	19	0	15	15	1	1	2	36
05:45 PM	12	2	14	2	16	18	0	0	0	32
Total	54	9	63	4	63	67	6	1	7	137
Grand Total	93	24	117	5	154	159	15	1	16	292
Apprch %	79.5	20.5		3.1	96.9		93.8	6.2		
Total %	31.8	8.2	40.1	1.7	52.7	54.5	5.1	0.3	5.5	

	Mesa View Drive Southbound			Mesa View Drive Northbound			Fern Haven Street Eastbound			
Start Time	Thru	Right	App. Total	Left	Thru	App. Total	Left	Right	App. Total	Int. Total
Peak Hour Analysis From 04:00 PM to 05:45 PM - Peak 1 of 1										
Peak Hour for Entire Intersection Begins at 04:00 PM										
04:00 PM	**13**	3	**16**	**1**	**30**	**31**	3	0	3	**50**
04:15 PM	11	1	12	0	17	17	1	0	1	30
04:30 PM	10	4	14	0	22	22	**4**	0	**4**	40
04:45 PM	5	**7**	12	0	22	22	1	0	1	35
Total Volume	39	15	54	1	91	92	9	0	9	155
% App. Total	72.2	27.8		1.1	98.9		100	0		
PHF	.750	.536	.844	.250	.758	.742	.563	.000	.563	.775

Counts Unlimited
PO Box 1178
Corona, CA 92878
(951) 268-6268

City of Victorville
N/S: Mesa View Drive
E/W: Fern Haven Street
Weather: Clear

File Name : 09_VIC_Mesa View_Fern Haven PM
Site Code : 99919361
Start Date : 5/23/2019
Page No : 2

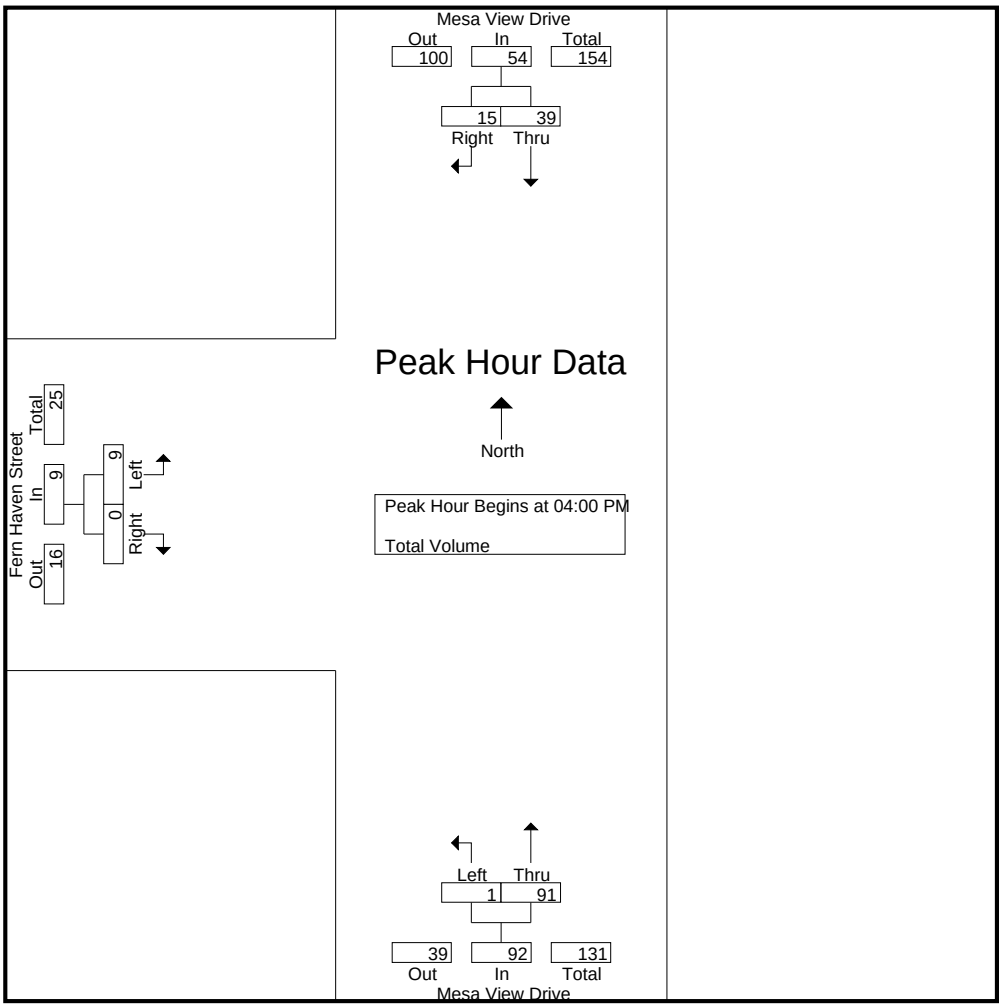

Peak Hour Analysis From 04:00 PM to 05:45 PM - Peak 1 of 1
Peak Hour for Each Approach Begins at:

	05:00 PM			04:00 PM			04:30 PM		
+0 mins.	15	**5**	**20**	**1**	**30**	**31**	**4**	0	**4**
+15 mins.	9	1	10	0	17	17	1	0	1
+30 mins.	**18**	1	19	0	22	22	3	0	3
+45 mins.	12	2	14	0	22	22	2	0	2
Total Volume	54	9	63	1	91	92	10	0	10
% App. Total	85.7	14.3		1.1	98.9		100	0	
PHF	.750	.450	.788	.250	.758	.742	.625	.000	.625

Location: Victorville
N/S: Mesa View Drive
E/W: Fern Haven Street

Date: 5/23/2019
Day: Thursday

PEDESTRIANS

	North Leg Mesa View Drive	East Leg Fern Haven Street	South Leg Mesa View Drive	West Leg Fern Haven Street	
	Pedestrians	Pedestrians	Pedestrians	Pedestrians	
7:00 AM	0	0	1	1	2
7:15 AM	1	0	0	0	1
7:30 AM	0	0	0	0	0
7:45 AM	0	0	0	0	0
8:00 AM	0	0	0	0	0
8:15 AM	0	0	0	0	0
8:30 AM	0	0	0	0	0
8:45 AM	0	0	0	0	0
TOTAL VOLUMES:	1	0	1	1	3

	North Leg Mesa View Drive	East Leg Fern Haven Street	South Leg Mesa View Drive	West Leg Fern Haven Street	
	Pedestrians	Pedestrians	Pedestrians	Pedestrians	
4:00 PM	0	0	0	0	0
4:15 PM	0	0	0	0	0
4:30 PM	0	0	0	0	0
4:45 PM	0	0	0	0	0
5:00 PM	0	0	0	0	0
5:15 PM	0	0	0	1	1
5:30 PM	0	0	0	0	0
5:45 PM	0	0	0	0	0
TOTAL VOLUMES:	0	0	0	1	1

Counts Unlimited, Inc.
PO Box 1178
Corona, CA 92878
951-268-6268

Location: Victorville
N/S: Mesa View Drive
E/W: Fern Haven Street

Date: 5/23/2019
Day: Thursday

BICYCLES

	Southbound Mesa View Drive			Westbound Fern Haven Street			Northbound Mesa View Drive			Eastbound Fern Haven Street			
	Left	Thru	Right	Left	Thru	Right	Left	Thru	Right	Left	Thru	Right	
7:00 AM	0	0	0	0	0	0	0	0	0	0	0	0	0
7:15 AM	0	0	0	0	0	0	0	0	0	0	0	0	0
7:30 AM	0	0	0	0	0	0	0	0	0	0	0	0	0
7:45 AM	0	0	0	0	0	0	0	0	0	0	0	0	0
8:00 AM	0	0	0	0	0	0	0	0	0	0	0	0	0
8:15 AM	0	0	0	0	0	0	0	0	0	0	0	0	0
8:30 AM	0	0	0	0	0	0	0	0	0	0	0	0	0
8:45 AM	0	0	0	0	0	0	0	0	0	0	0	0	0
TOTAL VOLUMES:	0	0	0	0	0	0	0	0	0	0	0	0	0

	Southbound Mesa View Drive			Westbound Fern Haven Street			Northbound Mesa View Drive			Eastbound Fern Haven Street			
	Left	Thru	Right	Left	Thru	Right	Left	Thru	Right	Left	Thru	Right	
4:00 PM	0	0	0	0	0	0	0	0	0	0	0	0	0
4:15 PM	0	0	0	0	0	0	0	0	0	0	0	0	0
4:30 PM	0	0	0	0	0	0	0	0	0	0	0	0	0
4:45 PM	0	0	0	0	0	0	0	0	0	0	0	0	0
5:00 PM	0	0	0	0	0	0	0	0	0	0	0	0	0
5:15 PM	0	0	0	0	0	0	0	0	0	0	0	0	0
5:30 PM	0	0	0	0	0	0	0	0	0	0	0	0	0
5:45 PM	0	0	0	0	0	0	0	0	0	0	0	0	0
TOTAL VOLUMES:	0	0	0	0	0	0	0	0	0	0	0	0	0

Counts Unlimited
PO Box 1178
Corona, CA 92878
(951) 268-6268

City of Victorville
N/S: Mesa View Drive
E/W: La Mesa Road
Weather: Clear

File Name : 10_VIC_Mesa View_La Mesa AM
Site Code : 99919361
Start Date : 5/23/2019
Page No : 1

Groups Printed- Total Volume

	Mesa View Drive Southbound				La Mesa Road Westbound				Mesa View Drive Northbound				La Mesa Road Eastbound				
Start Time	Left	Thru	Right	App. Total	Left	Thru	Right	App. Total	Left	Thru	Right	App. Total	Left	Thru	Right	App. Total	Int. Total
07:00 AM	2	26	0	28	2	0	3	5	0	8	0	8	0	0	0	0	41
07:15 AM	5	16	0	21	3	0	3	6	0	27	1	28	0	0	0	0	55
07:30 AM	1	18	0	19	5	0	2	7	0	20	2	22	0	0	0	0	48
07:45 AM	0	26	0	26	4	0	6	10	0	26	1	27	1	0	0	1	64
Total	8	86	0	94	14	0	14	28	0	81	4	85	1	0	0	1	208
08:00 AM	1	23	0	24	5	0	1	6	0	22	4	26	0	0	0	0	56
08:15 AM	0	23	0	23	6	0	0	6	0	15	4	19	0	0	0	0	48
08:30 AM	2	23	0	25	2	1	0	3	0	10	2	12	0	0	1	1	41
08:45 AM	1	23	0	24	1	0	0	1	0	8	2	10	0	0	0	0	35
Total	4	92	0	96	14	1	1	16	0	55	12	67	0	0	1	1	180
Grand Total	12	178	0	190	28	1	15	44	0	136	16	152	1	0	1	2	388
Apprch %	6.3	93.7	0		63.6	2.3	34.1		0	89.5	10.5		50	0	50		
Total %	3.1	45.9	0	49	7.2	0.3	3.9	11.3	0	35.1	4.1	39.2	0.3	0	0.3	0.5	

	Mesa View Drive Southbound				La Mesa Road Westbound				Mesa View Drive Northbound				La Mesa Road Eastbound				
Start Time	Left	Thru	Right	App. Total	Left	Thru	Right	App. Total	Left	Thru	Right	App. Total	Left	Thru	Right	App. Total	Int. Total
Peak Hour Analysis From 07:00 AM to 08:45 AM - Peak 1 of 1																	
Peak Hour for Entire Intersection Begins at 07:15 AM																	
07:15 AM	**5**	16	0	21	3	0	3	6	0	**27**	1	**28**	0	0	0	0	55
07:30 AM	1	18	0	19	**5**	0	2	7	0	20	2	22	0	0	0	0	48
07:45 AM	0	**26**	0	**26**	4	0	**6**	**10**	0	26	1	27	**1**	0	0	**1**	**64**
08:00 AM	1	23	0	24	5	0	1	6	0	22	**4**	26	0	0	0	0	56
Total Volume	7	83	0	90	17	0	12	29	0	95	8	103	1	0	0	1	223
% App. Total	7.8	92.2	0		58.6	0	41.4		0	92.2	7.8		100	0	0		
PHF	.350	.798	.000	.865	.850	.000	.500	.725	.000	.880	.500	.920	.250	.000	.000	.250	.871

Counts Unlimited
PO Box 1178
Corona, CA 92878
(951) 268-6268

City of Victorville
N/S: Mesa View Drive
E/W: La Mesa Road
Weather: Clear

File Name : 10_VIC_Mesa View_La Mesa AM
Site Code : 99919361
Start Date : 5/23/2019
Page No : 2

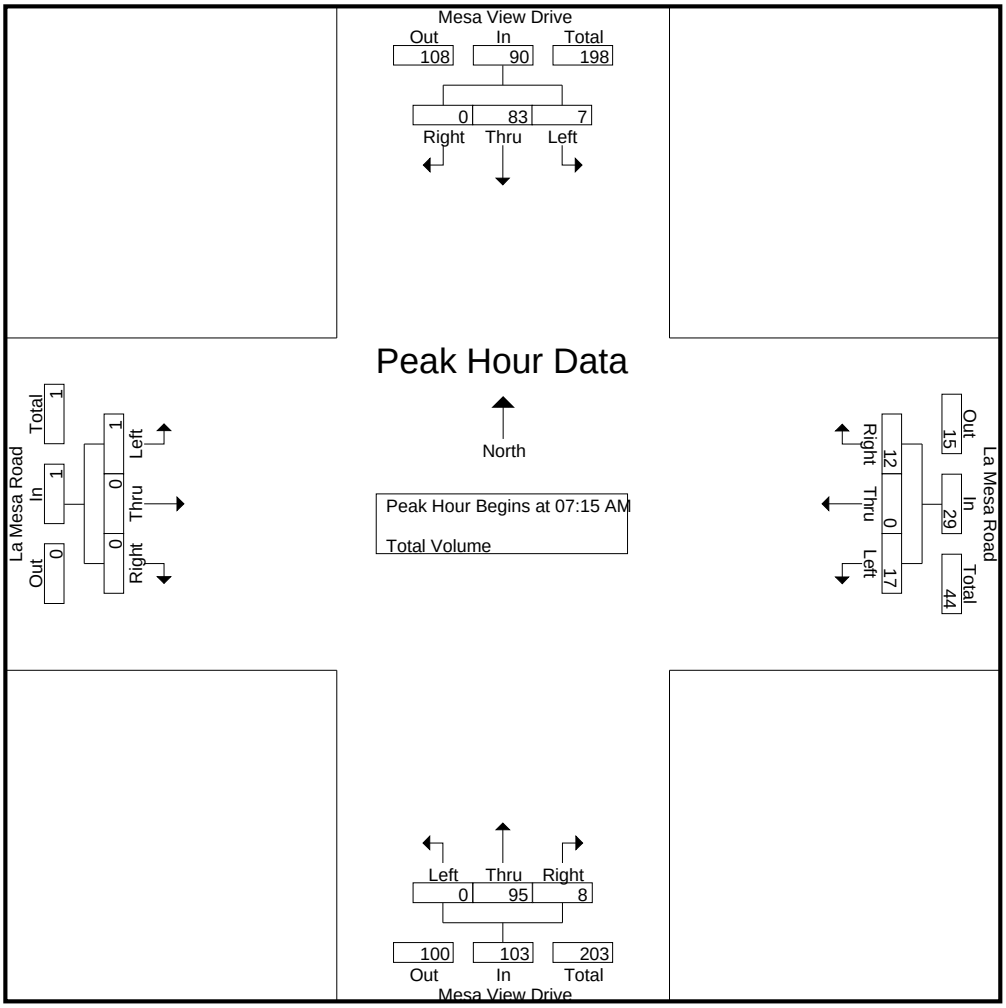

Peak Hour Analysis From 07:00 AM to 08:45 AM - Peak 1 of 1
Peak Hour for Each Approach Begins at:

	07:45 AM				07:15 AM				07:15 AM				07:45 AM			
+0 mins.	0	**26**	0	**26**	3	0	3	6	0	**27**	1	**28**	**1**	0	0	**1**
+15 mins.	1	23	0	24	**5**	0	2	7	0	20	2	22	0	0	0	0
+30 mins.	0	23	0	23	4	0	**6**	**10**	0	26	1	27	0	0	0	0
+45 mins.	**2**	23	0	25	5	0	1	6	0	22	**4**	26	0	0	**1**	1
Total Volume	3	95	0	98	17	0	12	29	0	95	8	103	1	0	1	2
% App. Total	3.1	96.9	0		58.6	0	41.4		0	92.2	7.8		50	0	50	
PHF	.375	.913	.000	.942	.850	.000	.500	.725	.000	.880	.500	.920	.250	.000	.250	.500

Counts Unlimited
PO Box 1178
Corona, CA 92878
(951) 268-6268

City of Victorville
N/S: Mesa View Drive
E/W: La Mesa Road
Weather: Clear

File Name : 10_VIC_Mesa View_La Mesa PM
Site Code : 99919361
Start Date : 5/23/2019
Page No : 1

Groups Printed- Total Volume

	Mesa View Drive Southbound				La Mesa Road Westbound				Mesa View Drive Northbound				La Mesa Road Eastbound				
Start Time	Left	Thru	Right	App. Total	Left	Thru	Right	App. Total	Left	Thru	Right	App. Total	Left	Thru	Right	App. Total	Int. Total
04:00 PM	0	6	0	6	1	0	1	2	0	17	0	17	0	0	0	0	25
04:15 PM	0	7	0	7	1	0	1	2	0	9	0	9	0	0	0	0	18
04:30 PM	2	17	0	19	4	0	0	4	0	16	2	18	1	0	0	1	42
04:45 PM	2	18	0	20	0	0	2	2	0	24	2	26	0	0	0	0	48
Total	4	48	0	52	6	0	4	10	0	66	4	70	1	0	0	1	133
05:00 PM	0	10	0	10	2	0	0	2	0	20	2	22	0	0	0	0	34
05:15 PM	0	22	0	22	5	0	0	5	0	18	5	23	0	0	0	0	50
05:30 PM	0	8	0	8	1	0	2	3	0	22	0	22	0	0	0	0	33
05:45 PM	0	13	0	13	3	0	2	5	1	20	1	22	0	0	0	0	40
Total	0	53	0	53	11	0	4	15	1	80	8	89	0	0	0	0	157
Grand Total	4	101	0	105	17	0	8	25	1	146	12	159	1	0	0	1	290
Apprch %	3.8	96.2	0		68	0	32		0.6	91.8	7.5		100	0	0		
Total %	1.4	34.8	0	36.2	5.9	0	2.8	8.6	0.3	50.3	4.1	54.8	0.3	0	0	0.3	

	Mesa View Drive Southbound				La Mesa Road Westbound				Mesa View Drive Northbound				La Mesa Road Eastbound				
Start Time	Left	Thru	Right	App. Total	Left	Thru	Right	App. Total	Left	Thru	Right	App. Total	Left	Thru	Right	App. Total	Int. Total
Peak Hour Analysis From 04:00 PM to 05:45 PM - Peak 1 of 1																	
Peak Hour for Entire Intersection Begins at 04:30 PM																	
04:30 PM	**2**	17	0	19	4	0	0	4	0	16	2	18	**1**	0	0	**1**	42
04:45 PM	2	18	0	20	0	0	**2**	2	0	**24**	2	**26**	0	0	0	0	48
05:00 PM	0	10	0	10	2	0	0	2	0	20	2	22	0	0	0	0	34
05:15 PM	0	**22**	0	**22**	**5**	0	0	**5**	0	18	**5**	23	0	0	0	0	**50**
Total Volume	4	67	0	71	11	0	2	13	0	78	11	89	1	0	0	1	174
% App. Total	5.6	94.4	0		84.6	0	15.4		0	87.6	12.4		100	0	0		
PHF	.500	.761	.000	.807	.550	.000	.250	.650	.000	.813	.550	.856	.250	.000	.000	.250	.870

Counts Unlimited
PO Box 1178
Corona, CA 92878
(951) 268-6268

City of Victorville
N/S: Mesa View Drive
E/W: La Mesa Road
Weather: Clear

File Name : 10_VIC_Mesa View_La Mesa PM
Site Code : 99919361
Start Date : 5/23/2019
Page No : 2

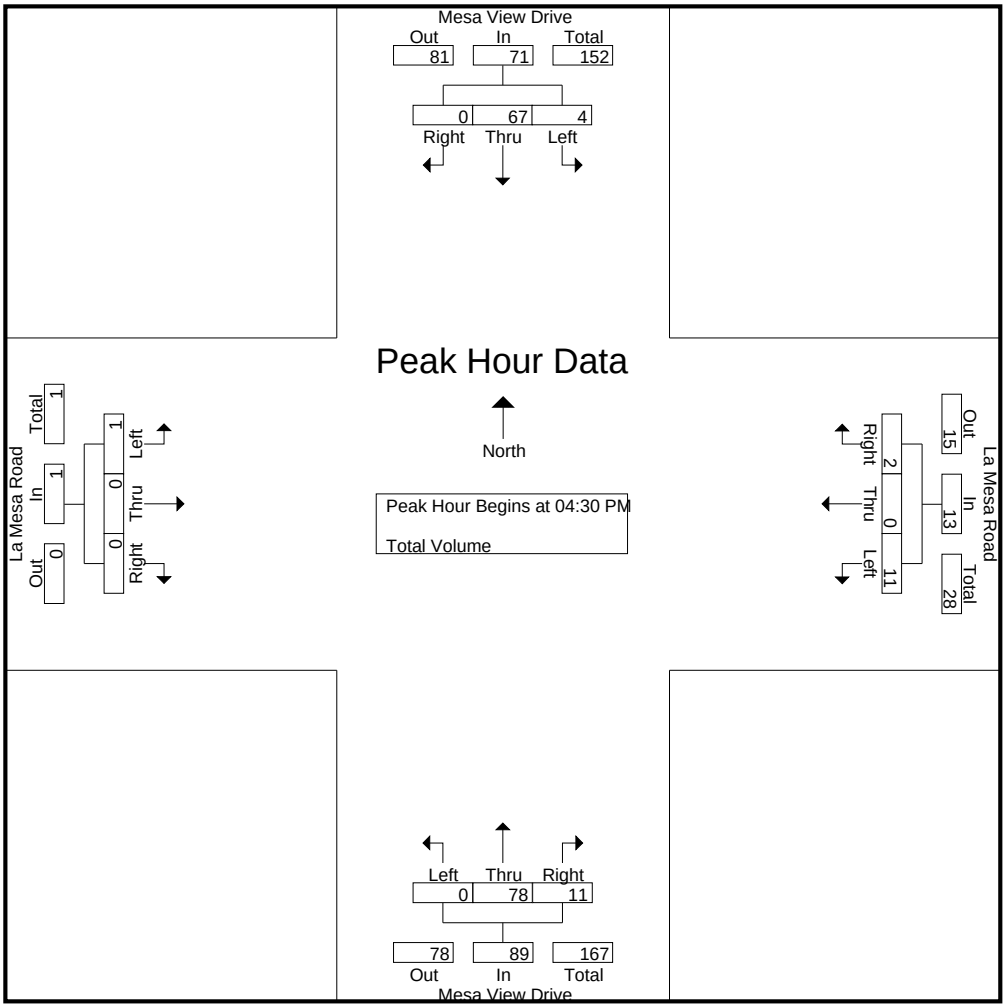

Peak Hour Analysis From 04:00 PM to 05:45 PM - Peak 1 of 1
Peak Hour for Each Approach Begins at:

	04:30 PM				05:00 PM				04:45 PM				04:00 PM			
+0 mins.	**2**	17	0	19	2	0	0	2	0	**24**	2	**26**	0	0	0	0
+15 mins.	2	18	0	20	**5**	0	0	**5**	0	20	2	22	0	0	0	0
+30 mins.	0	10	0	10	1	0	**2**	3	0	18	**5**	23	**1**	0	0	**1**
+45 mins.	0	**22**	0	**22**	3	0	2	5	0	22	0	22	0	0	0	0
Total Volume	4	67	0	71	11	0	4	15	0	84	9	93	1	0	0	1
% App. Total	5.6	94.4	0		73.3	0	26.7		0	90.3	9.7		100	0	0	
PHF	.500	.761	.000	.807	.550	.000	.500	.750	.000	.875	.450	.894	.250	.000	.000	.250

Location: Victorville
N/S: Mesa View Drive
E/W: La Mesa Road

Date: 5/23/2019
Day: Thursday

PEDESTRIANS

	North Leg Mesa View Drive	East Leg La Mesa Road	South Leg Mesa View Drive	West Leg La Mesa Road	
	Pedestrians	Pedestrians	Pedestrians	Pedestrians	
7:00 AM	2	1	0	0	3
7:15 AM	0	0	2	0	2
7:30 AM	2	1	0	0	3
7:45 AM	0	0	0	0	0
8:00 AM	0	0	0	0	0
8:15 AM	0	0	8	0	8
8:30 AM	0	0	0	0	0
8:45 AM	0	0	0	0	0
TOTAL VOLUMES:	4	2	10	0	16

	North Leg Mesa View Drive	East Leg La Mesa Road	South Leg Mesa View Drive	West Leg La Mesa Road	
	Pedestrians	Pedestrians	Pedestrians	Pedestrians	
4:00 PM	0	0	0	0	0
4:15 PM	0	0	0	0	0
4:30 PM	0	0	0	0	0
4:45 PM	0	0	0	0	0
5:00 PM	0	0	23	0	23
5:15 PM	0	0	0	0	0
5:30 PM	0	0	0	0	0
5:45 PM	0	0	0	0	0
TOTAL VOLUMES:	0	0	23	0	23

Counts Unlimited, Inc.
PO Box 1178
Corona, CA 92878
951-268-6268

Location: Victorville
N/S: Mesa View Drive
E/W: La Mesa Road

Date: 5/23/2019
Day: Thursday

BICYCLES

	Southbound Mesa View Drive			Westbound La Mesa Road			Northbound Mesa View Drive			Eastbound La Mesa Road			
	Left	Thru	Right	Left	Thru	Right	Left	Thru	Right	Left	Thru	Right	
7:00 AM	0	0	0	0	0	0	0	0	0	0	0	0	0
7:15 AM	0	0	0	0	0	0	0	0	0	0	0	0	0
7:30 AM	0	0	0	0	0	0	0	0	0	0	0	0	0
7:45 AM	0	0	0	0	0	0	0	0	0	0	0	0	0
8:00 AM	0	0	0	0	0	0	0	0	0	0	0	0	0
8:15 AM	0	0	0	0	0	0	0	0	0	0	0	0	0
8:30 AM	0	0	0	0	0	0	0	0	0	0	0	0	0
8:45 AM	0	0	0	0	0	0	0	0	0	0	0	0	0
TOTAL VOLUMES:	0	0	0	0	0	0	0	0	0	0	0	0	0

	Southbound Mesa View Drive			Westbound La Mesa Road			Northbound Mesa View Drive			Eastbound La Mesa Road			
	Left	Thru	Right	Left	Thru	Right	Left	Thru	Right	Left	Thru	Right	
4:00 PM	0	0	0	0	0	0	0	0	0	0	0	0	0
4:15 PM	0	0	0	0	0	0	0	0	0	0	0	0	0
4:30 PM	0	0	0	0	0	0	0	0	0	0	0	0	0
4:45 PM	0	0	0	0	0	0	0	0	0	0	0	0	0
5:00 PM	0	0	0	0	0	0	0	0	0	0	0	0	0
5:15 PM	0	0	0	0	0	0	0	0	0	0	0	0	0
5:30 PM	0	0	0	0	0	0	0	0	0	0	0	0	0
5:45 PM	0	0	0	0	0	0	0	0	0	0	0	0	0
TOTAL VOLUMES:	0	0	0	0	0	0	0	0	0	0	0	0	0

APPENDIX C – LEVEL OF SERVICE CALCULATIONS

Movement	EBL	EBT	EBR	WBL	WBT	WBR	NBL	NBT	NBR	SBL	SBT	SBR
Lane Configurations												
Traffic Volume (veh/h)	197	52	41	41	28	187	16	842	21	107	747	114
Future Volume (veh/h)	197	52	41	41	28	187	16	842	21	107	747	114
Initial Q (Qb), veh	0	0	0	0	0	0	0	0	0	0	0	0
Ped-Bike Adj(A_pbT)	1.00		1.00	1.00		1.00	1.00		1.00	1.00		1.00
Parking Bus, Adj	1.00	1.00	1.00	1.00	1.00	1.00	1.00	1.00	1.00	1.00	1.00	1.00
Work Zone On Approach		No			No			No			No	
Adj Sat Flow, veh/h/ln	1870	1870	1870	1870	1870	1870	1870	1870	1870	1870	1870	1870
Adj Flow Rate, veh/h	263	72	48	60	44	275	32	946	48	160	778	148
Peak Hour Factor	0.75	0.72	0.85	0.68	0.64	0.68	0.50	0.89	0.44	0.67	0.96	0.77
Percent Heavy Veh, %	2	2	2	2	2	2	2	2	2	2	2	2
Cap, veh/h	285	618	524	77	48	298	46	1090	486	190	1154	219
Arrive On Green	0.16	0.33	0.33	0.04	0.21	0.21	0.03	0.31	0.31	0.11	0.39	0.39
Sat Flow, veh/h	1781	1870	1585	1781	223	1396	1781	3554	1585	1781	2979	567
Grp Volume(v), veh/h	263	72	48	60	0	319	32	946	48	160	464	462
Grp Sat Flow(s),veh/h/ln	1781	1870	1585	1781	0	1619	1781	1777	1585	1781	1777	1768
Q Serve(g_s), s	10.9	2.0	1.6	2.5	0.0	14.5	1.3	18.9	1.6	6.6	16.2	16.2
Cycle Q Clear(g_c), s	10.9	2.0	1.6	2.5	0.0	14.5	1.3	18.9	1.6	6.6	16.2	16.2
Prop In Lane	1.00		1.00	1.00		0.86	1.00		1.00	1.00		0.32
Lane Grp Cap(c), veh/h	285	618	524	77	0	345	46	1090	486	190	688	685
V/C Ratio(X)	0.92	0.12	0.09	0.78	0.00	0.92	0.69	0.87	0.10	0.84	0.67	0.67
Avail Cap(c_a), veh/h	285	618	524	143	0	345	95	1090	486	190	688	685
HCM Platoon Ratio	1.00	1.00	1.00	1.00	1.00	1.00	1.00	1.00	1.00	1.00	1.00	1.00
Upstream Filter(I)	1.00	1.00	1.00	1.00	0.00	1.00	1.00	1.00	1.00	1.00	1.00	1.00
Uniform Delay (d), s/veh	31.0	17.5	17.3	35.5	0.0	28.9	36.2	24.6	18.6	32.9	19.0	19.0
Incr Delay (d2), s/veh	33.7	0.1	0.1	15.9	0.0	29.7	16.9	9.4	0.4	27.4	5.2	5.3
Initial Q Delay(d3),s/veh	0.0	0.0	0.0	0.0	0.0	0.0	0.0	0.0	0.0	0.0	0.0	0.0
%ile BackOfQ(50%),veh/ln	7.2	0.8	0.6	1.4	0.0	8.2	0.8	8.9	0.6	4.2	7.2	7.2
Unsig. Movement Delay, s/veh												
LnGrp Delay(d),s/veh	64.7	17.6	17.4	51.4	0.0	58.6	53.1	33.9	19.0	60.3	24.3	24.3
LnGrp LOS	E	B	B	D	A	E	D	C	B	E	C	C
Approach Vol, veh/h		383			379			1026			1086	
Approach Delay, s/veh		49.9			57.5			33.8			29.6	
Approach LOS		D			E			C			C	

Timer - Assigned Phs	1	2	3	4	5	6	7	8
Phs Duration (G+Y+Rc), s	12.0	27.0	7.2	28.8	5.9	33.1	16.0	20.0
Change Period (Y+Rc), s	4.0	4.0	4.0	4.0	4.0	4.0	4.0	4.0
Max Green Setting (Gmax), s	8.0	23.0	6.0	22.0	4.0	27.0	12.0	16.0
Max Q Clear Time (g_c+I1), s	8.6	20.9	4.5	4.0	3.3	18.2	12.9	16.5
Green Ext Time (p_c), s	0.0	1.3	0.0	0.4	0.0	3.9	0.0	0.0

Intersection Summary	
HCM 6th Ctrl Delay	37.5
HCM 6th LOS	D

Intersection	
Int Delay, s/veh	3.8

Movement	EBL	EBT	EBR	WBL	WBT	WBR	NBL	NBT	NBR	SBL	SBT	SBR
Lane Configurations												
Traffic Vol, veh/h	6	26	3	14	14	11	7	58	52	22	81	7
Future Vol, veh/h	6	26	3	14	14	11	7	58	52	22	81	7
Conflicting Peds, #/hr	0	0	0	0	0	0	0	0	0	0	0	0
Sign Control	Stop	Stop	Stop	Stop	Stop	Stop	Free	Free	Free	Free	Free	Free
RT Channelized	-	-	None	-	-	None	-	-	None	-	-	None
Storage Length	-	-	-	-	-	-	-	-	-	-	-	-
Veh in Median Storage, #	-	0	-	-	0	-	-	0	-	-	0	-
Grade, %	-	0	-	-	0	-	-	0	-	-	0	-
Peak Hour Factor	50	59	38	88	70	69	58	81	54	69	84	58
Heavy Vehicles, %	2	2	2	2	2	2	2	2	2	2	2	2
Mvmt Flow	12	44	8	16	20	16	12	72	96	32	96	12

Major/Minor	Minor2			Minor1			Major1			Major2		
Conflicting Flow All	328	358	102	336	316	120	108	0	0	168	0	0
Stage 1	166	166	-	144	144	-	-	-	-	-	-	-
Stage 2	162	192	-	192	172	-	-	-	-	-	-	-
Critical Hdwy	7.12	6.52	6.22	7.12	6.52	6.22	4.12	-	-	4.12	-	-
Critical Hdwy Stg 1	6.12	5.52	-	6.12	5.52	-	-	-	-	-	-	-
Critical Hdwy Stg 2	6.12	5.52	-	6.12	5.52	-	-	-	-	-	-	-
Follow-up Hdwy	3.518	4.018	3.318	3.518	4.018	3.318	2.218	-	-	2.218	-	-
Pot Cap-1 Maneuver	625	568	953	618	600	931	1483	-	-	1410	-	-
Stage 1	836	761	-	859	778	-	-	-	-	-	-	-
Stage 2	840	742	-	810	756	-	-	-	-	-	-	-
Platoon blocked, %								-	-		-	-
Mov Cap-1 Maneuver	583	549	953	561	580	931	1483	-	-	1410	-	-
Mov Cap-2 Maneuver	583	549	-	561	580	-	-	-	-	-	-	-
Stage 1	828	743	-	851	771	-	-	-	-	-	-	-
Stage 2	797	735	-	738	738	-	-	-	-	-	-	-

Approach	EB	WB	NB	SB
HCM Control Delay, s	11.9	11	0.5	1.7
HCM LOS	B	B		

Minor Lane/Major Mvmt	NBL	NBT	NBR	EBLn1	WBLn1	SBL	SBT	SBR
Capacity (veh/h)	1483	-	-	586	648	1410	-	-
HCM Lane V/C Ratio	0.008	-	-	0.109	0.08	0.023	-	-
HCM Control Delay (s)	7.4	0	-	11.9	11	7.6	0	-
HCM Lane LOS	A	A	-	B	B	A	A	-
HCM 95th %tile Q(veh)	0	-	-	0.4	0.3	0.1	-	-

Intersection	
Int Delay, s/veh	3.5

Movement	EBL	EBT	WBT	WBR	SBL	SBR
Lane Configurations						
Traffic Vol, veh/h	61	59	31	173	52	4
Future Vol, veh/h	61	59	31	173	52	4
Conflicting Peds, #/hr	0	0	0	0	0	0
Sign Control	Free	Free	Free	Free	Stop	Stop
RT Channelized	-	None	-	None	-	None
Storage Length	-	-	-	-	0	-
Veh in Median Storage, #	-	0	0	-	0	-
Grade, %	-	0	0	-	0	-
Peak Hour Factor	42	92	55	48	72	50
Heavy Vehicles, %	2	2	2	2	2	2
Mvmt Flow	145	64	56	360	72	8

Major/Minor	Major1		Major2		Minor2	
Conflicting Flow All	416	0	-	0	590	236
Stage 1	-	-	-	-	236	-
Stage 2	-	-	-	-	354	-
Critical Hdwy	4.12	-	-	-	6.42	6.22
Critical Hdwy Stg 1	-	-	-	-	5.42	-
Critical Hdwy Stg 2	-	-	-	-	5.42	-
Follow-up Hdwy	2.218	-	-	-	3.518	3.318
Pot Cap-1 Maneuver	1143	-	-	-	470	803
Stage 1	-	-	-	-	803	-
Stage 2	-	-	-	-	710	-
Platoon blocked, %		-	-	-		
Mov Cap-1 Maneuver	1143	-	-	-	408	803
Mov Cap-2 Maneuver	-	-	-	-	408	-
Stage 1	-	-	-	-	697	-
Stage 2	-	-	-	-	710	-

Approach	EB	WB	SB
HCM Control Delay, s	6	0	15.3
HCM LOS			C

Minor Lane/Major Mvmt	EBL	EBT	WBT	WBR	SBLn1
Capacity (veh/h)	1143	-	-	-	429
HCM Lane V/C Ratio	0.127	-	-	-	0.187
HCM Control Delay (s)	8.6	0	-	-	15.3
HCM Lane LOS	A	A	-	-	C
HCM 95th %tile Q(veh)	0.4	-	-	-	0.7

Intersection	
Int Delay, s/veh	12.7

Movement	EBL	EBT	EBR	WBL	WBT	WBR	NBL	NBT	NBR	SBL	SBT	SBR
Lane Configurations												
Traffic Vol, veh/h	8	100	4	55	130	13	39	7	92	54	50	31
Future Vol, veh/h	8	100	4	55	130	13	39	7	92	54	50	31
Conflicting Peds, #/hr	0	0	0	0	0	0	0	0	0	0	0	0
Sign Control	Free	Free	Free	Free	Free	Free	Stop	Stop	Stop	Stop	Stop	Stop
RT Channelized	-	-	None	-	-	None	-	-	None	-	-	None
Storage Length	55	-	-	75	-	0	-	-	-	-	-	-
Veh in Median Storage, #	-	0	-	-	0	-	-	0	-	-	0	-
Grade, %	-	0	-	-	0	-	-	0	-	-	0	-
Peak Hour Factor	50	86	33	86	55	54	41	44	79	50	50	46
Heavy Vehicles, %	2	2	2	2	2	2	2	2	2	2	2	2
Mvmt Flow	16	116	12	64	236	24	95	16	116	108	100	67

Major/Minor	Major1			Major2			Minor1			Minor2		
Conflicting Flow All	260	0	0	128	0	0	614	542	122	584	524	236
Stage 1	-	-	-	-	-	-	154	154	-	364	364	-
Stage 2	-	-	-	-	-	-	460	388	-	220	160	-
Critical Hdwy	4.12	-	-	4.12	-	-	7.12	6.52	6.22	7.12	6.52	6.22
Critical Hdwy Stg 1	-	-	-	-	-	-	6.12	5.52	-	6.12	5.52	-
Critical Hdwy Stg 2	-	-	-	-	-	-	6.12	5.52	-	6.12	5.52	-
Follow-up Hdwy	2.218	-	-	2.218	-	-	3.518	4.018	3.318	3.518	4.018	3.318
Pot Cap-1 Maneuver	1304	-	-	1458	-	-	404	447	929	423	458	803
Stage 1	-	-	-	-	-	-	848	770	-	655	624	-
Stage 2	-	-	-	-	-	-	581	609	-	782	766	-
Platoon blocked, %		-	-		-	-						
Mov Cap-1 Maneuver	1304	-	-	1458	-	-	292	422	929	344	433	803
Mov Cap-2 Maneuver	-	-	-	-	-	-	292	422	-	344	433	-
Stage 1	-	-	-	-	-	-	838	761	-	647	597	-
Stage 2	-	-	-	-	-	-	424	582	-	661	757	-

Approach	EB	WB	NB	SB
HCM Control Delay, s	0.9	1.5	19.9	26.1
HCM LOS			C	D

Minor Lane/Major Mvmt	NBLn1	EBL	EBT	EBR	WBL	WBT	WBR	SBLn1
Capacity (veh/h)	465	1304	-	-	1458	-	-	438
HCM Lane V/C Ratio	0.489	0.012	-	-	0.044	-	-	0.629
HCM Control Delay (s)	19.9	7.8	-	-	7.6	-	-	26.1
HCM Lane LOS	C	A	-	-	A	-	-	D
HCM 95th %tile Q(veh)	2.6	0	-	-	0.1	-	-	4.2

Movement	EBL	EBT	EBR	WBL	WBT	WBR	NBL	NBT	NBR	SBL	SBT	SBR
Lane Configurations												
Traffic Volume (veh/h)	67	115	63	81	96	150	36	657	44	150	609	73
Future Volume (veh/h)	67	115	63	81	96	150	36	657	44	150	609	73
Initial Q (Qb), veh	0	0	0	0	0	0	0	0	0	0	0	0
Ped-Bike Adj(A_pbT)	1.00		1.00	1.00		1.00	1.00		1.00	1.00		1.00
Parking Bus, Adj	1.00	1.00	1.00	1.00	1.00	1.00	1.00	1.00	1.00	1.00	1.00	1.00
Work Zone On Approach		No			No			No			No	
Adj Sat Flow, veh/h/ln	1870	1870	1870	1870	1870	1870	1870	1870	1870	1870	1870	1870
Adj Flow Rate, veh/h	88	128	84	104	160	203	44	755	72	254	716	104
Peak Hour Factor	0.76	0.90	0.75	0.78	0.60	0.74	0.82	0.87	0.61	0.59	0.85	0.70
Percent Heavy Veh, %	2	2	2	2	2	2	2	2	2	2	2	2
Cap, veh/h	223	564	478	401	226	287	60	1137	108	304	1720	767
Arrive On Green	0.30	0.30	0.30	0.30	0.30	0.30	0.03	0.35	0.35	0.17	0.48	0.48
Sat Flow, veh/h	1019	1870	1585	1170	749	950	1781	3278	313	1781	3554	1585
Grp Volume(v), veh/h	88	128	84	104	0	363	44	409	418	254	716	104
Grp Sat Flow(s),veh/h/ln	1019	1870	1585	1170	0	1699	1781	1777	1814	1781	1777	1585
Q Serve(g_s), s	5.6	3.4	2.6	4.9	0.0	12.6	1.6	13.0	13.0	9.1	8.6	2.4
Cycle Q Clear(g_c), s	18.1	3.4	2.6	8.3	0.0	12.6	1.6	13.0	13.0	9.1	8.6	2.4
Prop In Lane	1.00		1.00	1.00		0.56	1.00		0.17	1.00		1.00
Lane Grp Cap(c), veh/h	223	564	478	401	0	513	60	616	629	304	1720	767
V/C Ratio(X)	0.40	0.23	0.18	0.26	0.00	0.71	0.74	0.66	0.66	0.84	0.42	0.14
Avail Cap(c_a), veh/h	223	564	478	401	0	513	161	616	629	403	1720	767
HCM Platoon Ratio	1.00	1.00	1.00	1.00	1.00	1.00	1.00	1.00	1.00	1.00	1.00	1.00
Upstream Filter(I)	1.00	1.00	1.00	1.00	0.00	1.00	1.00	1.00	1.00	1.00	1.00	1.00
Uniform Delay (d), s/veh	28.6	17.4	17.1	20.5	0.0	20.6	31.8	18.4	18.4	26.6	11.1	9.5
Incr Delay (d2), s/veh	1.1	0.2	0.2	0.3	0.0	4.5	16.1	5.6	5.5	11.0	0.7	0.4
Initial Q Delay(d3),s/veh	0.0	0.0	0.0	0.0	0.0	0.0	0.0	0.0	0.0	0.0	0.0	0.0
%ile BackOfQ(50%),veh/ln	1.4	1.4	0.9	1.3	0.0	5.2	0.9	5.8	5.9	4.6	3.2	0.8
Unsig. Movement Delay, s/veh												
LnGrp Delay(d),s/veh	29.8	17.6	17.3	20.8	0.0	25.0	47.9	23.9	23.8	37.6	11.8	9.8
LnGrp LOS	C	B	B	C	A	C	D	C	C	D	B	A
Approach Vol, veh/h		300			467			871			1074	
Approach Delay, s/veh		21.1			24.1			25.1			17.7	
Approach LOS		C			C			C			B	

Timer - Assigned Phs	1	2		4	5	6		8
Phs Duration (G+Y+Rc), s	15.3	27.0		24.0	6.2	36.1		24.0
Change Period (Y+Rc), s	4.0	4.0		4.0	4.0	4.0		4.0
Max Green Setting (Gmax), s	15.0	23.0		20.0	6.0	32.0		20.0
Max Q Clear Time (g_c+I1), s	11.1	15.0		20.1	3.6	10.6		14.6
Green Ext Time (p_c), s	0.3	3.2		0.0	0.0	5.4		1.3

Intersection Summary	
HCM 6th Ctrl Delay	21.6
HCM 6th LOS	C

Intersection	
Int Delay, s/veh	0.4

Movement	EBL	EBR	NBL	NBT	SBT	SBR
Lane Configurations						
Traffic Vol, veh/h	5	0	0	66	45	3
Future Vol, veh/h	5	0	0	66	45	3
Conflicting Peds, #/hr	0	0	0	0	0	0
Sign Control	Stop	Stop	Free	Free	Free	Free
RT Channelized	-	None	-	None	-	None
Storage Length	0	-	-	-	-	-
Veh in Median Storage, #	0	-	-	0	0	-
Grade, %	0	-	-	0	0	-
Peak Hour Factor	63	25	25	72	70	75
Heavy Vehicles, %	2	2	2	2	2	2
Mvmt Flow	8	0	0	92	64	4

Major/Minor	Minor2		Major1		Major2	
Conflicting Flow All	158	66	68	0	-	0
Stage 1	66	-	-	-	-	-
Stage 2	92	-	-	-	-	-
Critical Hdwy	6.42	6.22	4.12	-	-	-
Critical Hdwy Stg 1	5.42	-	-	-	-	-
Critical Hdwy Stg 2	5.42	-	-	-	-	-
Follow-up Hdwy	3.518	3.318	2.218	-	-	-
Pot Cap-1 Maneuver	833	998	1533	-	-	-
Stage 1	957	-	-	-	-	-
Stage 2	932	-	-	-	-	-
Platoon blocked, %				-	-	-
Mov Cap-1 Maneuver	833	998	1533	-	-	-
Mov Cap-2 Maneuver	833	-	-	-	-	-
Stage 1	957	-	-	-	-	-
Stage 2	932	-	-	-	-	-

Approach	EB	NB	SB
HCM Control Delay, s	9.4	0	0
HCM LOS	A		

Minor Lane/Major Mvmt	NBL	NBT	EBLn1	SBT	SBR
Capacity (veh/h)	1533	-	833	-	-
HCM Lane V/C Ratio	-	-	0.01	-	-
HCM Control Delay (s)	0	-	9.4	-	-
HCM Lane LOS	A	-	A	-	-
HCM 95th %tile Q(veh)	0	-	0	-	-

Intersection	
Int Delay, s/veh	0.1

Movement	EBL	EBT	EBR	WBL	WBT	WBR	NBL	NBT	NBR	SBL	SBT	SBR
Lane Configurations												
Traffic Vol, veh/h	1	0	0	17	0	12	0	95	8	7	83	0
Future Vol, veh/h	1	0	0	17	0	12	0	95	8	7	83	0
Conflicting Peds, #/hr	0	0	0	0	0	0	0	0	0	0	0	0
Sign Control	Free	Free	Free	Free	Free	Free	Stop	Stop	Stop	Stop	Stop	Stop
RT Channelized	-	-	None	-	-	None	-	-	None	-	-	None
Storage Length	-	-	-	-	-	-	-	-	-	-	-	-
Veh in Median Storage, #	-	0	-	-	0	-	-	0	-	-	0	-
Grade, %	-	0	-	-	0	-	-	0	-	-	0	-
Peak Hour Factor	25	25	25	85	25	50	25	88	50	35	80	25
Heavy Vehicles, %	2	2	2	2	2	2	2	2	2	2	2	2
Mvmt Flow	4	0	0	20	0	24	0	108	16	20	104	0

Major/Minor	Major1			Major2			Minor1			Minor2		
Conflicting Flow All	24	0	0	0	0	0	112	72	0	122	60	12
Stage 1	-	-	-	-	-	-	8	8	-	52	52	-
Stage 2	-	-	-	-	-	-	104	64	-	70	8	-
Critical Hdwy	4.12	-	-	4.12	-	-	7.12	6.52	6.22	7.12	6.52	6.22
Critical Hdwy Stg 1	-	-	-	-	-	-	6.12	5.52	-	6.12	5.52	-
Critical Hdwy Stg 2	-	-	-	-	-	-	6.12	5.52	-	6.12	5.52	-
Follow-up Hdwy	2.218	-	-	2.218	-	-	3.518	4.018	3.318	3.518	4.018	3.318
Pot Cap-1 Maneuver	1591	-	-	-	-	-	866	818	-	853	831	1069
Stage 1	-	-	-	-	-	-	1013	889	-	961	852	-
Stage 2	-	-	-	-	-	-	902	842	-	940	889	-
Platoon blocked, %		-	-		-	-						
Mov Cap-1 Maneuver	1591	-	-	-	-	-	781	816	-	-	829	1069
Mov Cap-2 Maneuver	-	-	-	-	-	-	781	816	-	-	829	-
Stage 1	-	-	-	-	-	-	1010	886	-	958	852	-
Stage 2	-	-	-	-	-	-	792	842	-	823	886	-

Approach	EB	WB	NB	SB
HCM Control Delay, s	7.3			
HCM LOS			-	-

Minor Lane/Major Mvmt	NBLn1	EBL	EBT	EBR	WBL	WBT	WBR	SBLn1
Capacity (veh/h)	-	1591	-	-	-	-	-	-
HCM Lane V/C Ratio	-	0.003	-	-	-	-	-	-
HCM Control Delay (s)	-	7.3	0	-	-	-	-	-
HCM Lane LOS	-	A	A	-	-	-	-	-
HCM 95th %tile Q(veh)	-	0	-	-	-	-	-	-

Movement	EBL	EBT	EBR	WBL	WBT	WBR	NBL	NBT	NBR	SBL	SBT	SBR
Lane Configurations												
Traffic Volume (veh/h)	115	34	32	8	40	92	36	988	20	88	906	117
Future Volume (veh/h)	115	34	32	8	40	92	36	988	20	88	906	117
Initial Q (Qb), veh	0	0	0	0	0	0	0	0	0	0	0	0
Ped-Bike Adj(A_pbT)	1.00		1.00	1.00		1.00	1.00		1.00	1.00		1.00
Parking Bus, Adj	1.00	1.00	1.00	1.00	1.00	1.00	1.00	1.00	1.00	1.00	1.00	1.00
Work Zone On Approach		No			No			No			No	
Adj Sat Flow, veh/h/ln	1870	1870	1870	1870	1870	1870	1870	1870	1870	1870	1870	1870
Adj Flow Rate, veh/h	144	56	40	12	63	116	48	1040	28	104	996	138
Peak Hour Factor	0.80	0.61	0.80	0.67	0.63	0.79	0.75	0.95	0.71	0.85	0.91	0.85
Percent Heavy Veh, %	2	2	2	2	2	2	2	2	2	2	2	2
Cap, veh/h	180	426	361	21	82	150	62	1625	725	133	1559	216
Arrive On Green	0.10	0.23	0.23	0.01	0.14	0.14	0.01	0.15	0.15	0.07	0.50	0.50
Sat Flow, veh/h	1781	1870	1585	1781	590	1085	1781	3554	1585	1781	3135	434
Grp Volume(v), veh/h	144	56	40	12	0	179	48	1040	28	104	564	570
Grp Sat Flow(s),veh/h/ln	1781	1870	1585	1781	0	1675	1781	1777	1585	1781	1777	1792
Q Serve(g_s), s	5.5	1.7	1.4	0.5	0.0	7.2	1.9	19.3	1.1	4.0	16.4	16.4
Cycle Q Clear(g_c), s	5.5	1.7	1.4	0.5	0.0	7.2	1.9	19.3	1.1	4.0	16.4	16.4
Prop In Lane	1.00		1.00	1.00		0.65	1.00		1.00	1.00		0.24
Lane Grp Cap(c), veh/h	180	426	361	21	0	232	62	1625	725	133	883	891
V/C Ratio(X)	0.80	0.13	0.11	0.57	0.00	0.77	0.78	0.64	0.04	0.78	0.64	0.64
Avail Cap(c_a), veh/h	204	534	453	102	0	383	102	1625	725	153	883	891
HCM Platoon Ratio	1.00	1.00	1.00	1.00	1.00	1.00	0.33	0.33	0.33	1.00	1.00	1.00
Upstream Filter(I)	1.00	1.00	1.00	1.00	0.00	1.00	0.73	0.73	0.73	1.00	1.00	1.00
Uniform Delay (d), s/veh	30.8	21.5	21.4	34.4	0.0	29.1	34.3	24.3	16.6	31.8	13.0	13.0
Incr Delay (d2), s/veh	17.8	0.1	0.1	21.6	0.0	5.4	14.1	1.4	0.1	20.2	3.5	3.5
Initial Q Delay(d3),s/veh	0.0	0.0	0.0	0.0	0.0	0.0	0.0	0.0	0.0	0.0	0.0	0.0
%ile BackOfQ(50%),veh/ln	3.2	0.7	0.5	0.3	0.0	3.1	1.0	9.3	0.4	2.4	6.6	6.6
Unsig. Movement Delay, s/veh												
LnGrp Delay(d),s/veh	48.6	21.7	21.6	56.0	0.0	34.5	48.4	25.7	16.6	52.1	16.5	16.5
LnGrp LOS	D	C	C	E	A	C	D	C	B	D	B	B
Approach Vol, veh/h		240			191			1116			1238	
Approach Delay, s/veh		37.8			35.9			26.5			19.5	
Approach LOS		D			D			C			B	

Timer - Assigned Phs	1	2	3	4	5	6	7	8
Phs Duration (G+Y+Rc), s	9.2	36.0	4.8	19.9	6.4	38.8	11.1	13.7
Change Period (Y+Rc), s	4.0	4.0	4.0	4.0	4.0	4.0	4.0	4.0
Max Green Setting (Gmax), s	6.0	24.0	4.0	20.0	4.0	26.0	8.0	16.0
Max Q Clear Time (g_c+I1), s	6.0	21.3	2.5	3.7	3.9	18.4	7.5	9.2
Green Ext Time (p_c), s	0.0	1.8	0.0	0.3	0.0	4.3	0.0	0.5

Intersection Summary	
HCM 6th Ctrl Delay	25.0
HCM 6th LOS	C

Intersection	
Int Delay, s/veh	3.7

Movement	EBL	EBT	EBR	WBL	WBT	WBR	NBL	NBT	NBR	SBL	SBT	SBR
Lane Configurations												
Traffic Vol, veh/h	4	8	9	11	14	20	9	66	19	8	41	8
Future Vol, veh/h	4	8	9	11	14	20	9	66	19	8	41	8
Conflicting Peds, #/hr	0	0	0	0	0	0	0	0	0	0	0	0
Sign Control	Stop	Stop	Stop	Stop	Stop	Stop	Free	Free	Free	Free	Free	Free
RT Channelized	-	-	None	-	-	None	-	-	None	-	-	None
Storage Length	-	-	-	-	-	-	-	-	-	-	-	-
Veh in Median Storage, #	-	0	-	-	0	-	-	0	-	-	0	-
Grade, %	-	0	-	-	0	-	-	0	-	-	0	-
Peak Hour Factor	33	40	56	69	88	83	45	61	68	67	64	50
Heavy Vehicles, %	2	2	2	2	2	2	2	2	2	2	2	2
Mvmt Flow	12	20	16	16	16	24	20	108	28	12	64	16

Major/Minor	Minor2			Minor1			Major1			Major2		
Conflicting Flow All	278	272	72	276	266	122	80	0	0	136	0	0
Stage 1	96	96	-	162	162	-	-	-	-	-	-	-
Stage 2	182	176	-	114	104	-	-	-	-	-	-	-
Critical Hdwy	7.12	6.52	6.22	7.12	6.52	6.22	4.12	-	-	4.12	-	-
Critical Hdwy Stg 1	6.12	5.52	-	6.12	5.52	-	-	-	-	-	-	-
Critical Hdwy Stg 2	6.12	5.52	-	6.12	5.52	-	-	-	-	-	-	-
Follow-up Hdwy	3.518	4.018	3.318	3.518	4.018	3.318	2.218	-	-	2.218	-	-
Pot Cap-1 Maneuver	674	635	990	676	640	929	1518	-	-	1448	-	-
Stage 1	911	815	-	840	764	-	-	-	-	-	-	-
Stage 2	820	753	-	891	809	-	-	-	-	-	-	-
Platoon blocked, %								-	-		-	-
Mov Cap-1 Maneuver	633	620	990	637	625	929	1518	-	-	1448	-	-
Mov Cap-2 Maneuver	633	620	-	637	625	-	-	-	-	-	-	-
Stage 1	898	808	-	828	753	-	-	-	-	-	-	-
Stage 2	771	742	-	847	802	-	-	-	-	-	-	-

Approach	EB	WB	NB	SB
HCM Control Delay, s	10.4	10.3	0.9	1
HCM LOS	B	B		

Minor Lane/Major Mvmt	NBL	NBT	NBR	EBLn1	WBLn1	SBL	SBT	SBR
Capacity (veh/h)	1518	-	-	712	732	1448	-	-
HCM Lane V/C Ratio	0.013	-	-	0.068	0.076	0.008	-	-
HCM Control Delay (s)	7.4	0	-	10.4	10.3	7.5	0	-
HCM Lane LOS	A	A	-	B	B	A	A	-
HCM 95th %tile Q(veh)	0	-	-	0.2	0.2	0	-	-

Intersection	
Int Delay, s/veh	2.8

Movement	EBL	EBT	WBT	WBR	SBL	SBR
Lane Configurations						
Traffic Vol, veh/h	7	29	46	67	33	3
Future Vol, veh/h	7	29	46	67	33	3
Conflicting Peds, #/hr	0	0	0	0	0	0
Sign Control	Free	Free	Free	Free	Stop	Stop
RT Channelized	-	None	-	None	-	None
Storage Length	-	-	-	-	0	-
Veh in Median Storage, #	-	0	0	-	0	-
Grade, %	-	0	0	-	0	-
Peak Hour Factor	44	73	82	70	55	75
Heavy Vehicles, %	2	2	2	2	2	2
Mvmt Flow	16	40	56	96	60	4

Major/Minor	Major1		Major2		Minor2	
Conflicting Flow All	152	0	-	0	176	104
Stage 1	-	-	-	-	104	-
Stage 2	-	-	-	-	72	-
Critical Hdwy	4.12	-	-	-	6.42	6.22
Critical Hdwy Stg 1	-	-	-	-	5.42	-
Critical Hdwy Stg 2	-	-	-	-	5.42	-
Follow-up Hdwy	2.218	-	-	-	3.518	3.318
Pot Cap-1 Maneuver	1429	-	-	-	814	951
Stage 1	-	-	-	-	920	-
Stage 2	-	-	-	-	951	-
Platoon blocked, %		-	-	-		
Mov Cap-1 Maneuver	1429	-	-	-	805	951
Mov Cap-2 Maneuver	-	-	-	-	805	-
Stage 1	-	-	-	-	910	-
Stage 2	-	-	-	-	951	-

Approach	EB	WB	SB
HCM Control Delay, s	2.2	0	9.8
HCM LOS			A

Minor Lane/Major Mvmt	EBL	EBT	WBT	WBR	SBLn1
Capacity (veh/h)	1429	-	-	-	813
HCM Lane V/C Ratio	0.011	-	-	-	0.079
HCM Control Delay (s)	7.5	0	-	-	9.8
HCM Lane LOS	A	A	-	-	A
HCM 95th %tile Q(veh)	0	-	-	-	0.3

Intersection	
Int Delay, s/veh	5.4

Movement	EBL	EBT	EBR	WBL	WBT	WBR	NBL	NBT	NBR	SBL	SBT	SBR
Lane Configurations												
Traffic Vol, veh/h	2	56	2	88	106	23	3	5	71	32	3	3
Future Vol, veh/h	2	56	2	88	106	23	3	5	71	32	3	3
Conflicting Peds, #/hr	0	0	0	0	0	0	0	0	0	0	0	0
Sign Control	Free	Free	Free	Free	Free	Free	Stop	Stop	Stop	Stop	Stop	Stop
RT Channelized	-	-	None	-	-	None	-	-	None	-	-	None
Storage Length	55	-	-	75	-	0	-	-	-	-	-	-
Veh in Median Storage, #	-	0	-	-	0	-	-	0	-	-	0	-
Grade, %	-	0	-	-	0	-	-	0	-	-	0	-
Peak Hour Factor	50	74	50	85	83	82	75	42	63	80	38	38
Heavy Vehicles, %	2	2	2	2	2	2	2	2	2	2	2	2
Mvmt Flow	4	76	4	104	128	28	4	12	113	40	8	8

Major/Minor	Major1			Major2			Minor1			Minor2		
Conflicting Flow All	156	0	0	80	0	0	444	450	78	485	424	128
Stage 1	-	-	-	-	-	-	86	86	-	336	336	-
Stage 2	-	-	-	-	-	-	358	364	-	149	88	-
Critical Hdwy	4.12	-	-	4.12	-	-	7.12	6.52	6.22	7.12	6.52	6.22
Critical Hdwy Stg 1	-	-	-	-	-	-	6.12	5.52	-	6.12	5.52	-
Critical Hdwy Stg 2	-	-	-	-	-	-	6.12	5.52	-	6.12	5.52	-
Follow-up Hdwy	2.218	-	-	2.218	-	-	3.518	4.018	3.318	3.518	4.018	3.318
Pot Cap-1 Maneuver	1424	-	-	1518	-	-	524	504	983	492	522	922
Stage 1	-	-	-	-	-	-	922	824	-	678	642	-
Stage 2	-	-	-	-	-	-	660	624	-	854	822	-
Platoon blocked, %		-	-		-	-						
Mov Cap-1 Maneuver	1424	-	-	1518	-	-	485	468	983	404	484	922
Mov Cap-2 Maneuver	-	-	-	-	-	-	485	468	-	404	484	-
Stage 1	-	-	-	-	-	-	919	822	-	676	598	-
Stage 2	-	-	-	-	-	-	601	581	-	743	820	-

Approach	EB	WB	NB	SB
HCM Control Delay, s	0.4	3	9.9	14.1
HCM LOS			A	B

Minor Lane/Major Mvmt	NBLn1	EBL	EBT	EBR	WBL	WBT	WBR	SBLn1
Capacity (veh/h)	867	1424	-	-	1518	-	-	450
HCM Lane V/C Ratio	0.148	0.003	-	-	0.068	-	-	0.124
HCM Control Delay (s)	9.9	7.5	-	-	7.5	-	-	14.1
HCM Lane LOS	A	A	-	-	A	-	-	B
HCM 95th %tile Q(veh)	0.5	0	-	-	0.2	-	-	0.4

Movement	EBL	EBT	EBR	WBL	WBT	WBR	NBL	NBT	NBR	SBL	SBT	SBR
Lane Configurations												
Traffic Volume (veh/h)	47	77	41	34	84	183	61	790	57	203	694	76
Future Volume (veh/h)	47	77	41	34	84	183	61	790	57	203	694	76
Initial Q (Qb), veh	0	0	0	0	0	0	0	0	0	0	0	0
Ped-Bike Adj(A_pbT)	1.00		1.00	1.00		1.00	1.00		1.00	1.00		1.00
Parking Bus, Adj	1.00	1.00	1.00	1.00	1.00	1.00	1.00	1.00	1.00	1.00	1.00	1.00
Work Zone On Approach		No			No			No			No	
Adj Sat Flow, veh/h/ln	1870	1870	1870	1870	1870	1870	1870	1870	1870	1870	1870	1870
Adj Flow Rate, veh/h	72	92	52	48	95	203	72	952	72	257	754	84
Peak Hour Factor	0.65	0.84	0.79	0.71	0.88	0.90	0.85	0.83	0.79	0.79	0.92	0.91
Percent Heavy Veh, %	2	2	2	2	2	2	2	2	2	2	2	2
Cap, veh/h	168	428	362	338	121	259	92	1452	110	296	1948	869
Arrive On Green	0.23	0.23	0.23	0.23	0.23	0.23	0.05	0.43	0.43	0.33	1.00	1.00
Sat Flow, veh/h	1081	1870	1585	1244	531	1135	1781	3348	253	1781	3554	1585
Grp Volume(v), veh/h	72	92	52	48	0	298	72	505	519	257	754	84
Grp Sat Flow(s),veh/h/ln	1081	1870	1585	1244	0	1666	1781	1777	1825	1781	1777	1585
Q Serve(g_s), s	4.2	2.8	1.8	2.3	0.0	11.8	2.8	15.8	15.8	9.5	0.0	0.0
Cycle Q Clear(g_c), s	16.0	2.8	1.8	5.1	0.0	11.8	2.8	15.8	15.8	9.5	0.0	0.0
Prop In Lane	1.00		1.00	1.00		0.68	1.00		0.14	1.00		1.00
Lane Grp Cap(c), veh/h	168	428	362	338	0	381	92	770	791	296	1948	869
V/C Ratio(X)	0.43	0.22	0.14	0.14	0.00	0.78	0.78	0.66	0.66	0.87	0.39	0.10
Avail Cap(c_a), veh/h	168	428	362	338	0	381	178	770	791	382	1948	869
HCM Platoon Ratio	1.00	1.00	1.00	1.00	1.00	1.00	1.00	1.00	1.00	2.00	2.00	2.00
Upstream Filter(I)	1.00	1.00	1.00	1.00	0.00	1.00	1.00	1.00	1.00	0.74	0.74	0.74
Uniform Delay (d), s/veh	33.1	21.9	21.5	24.0	0.0	25.4	32.8	15.7	15.7	22.6	0.0	0.0
Incr Delay (d2), s/veh	1.7	0.2	0.2	0.2	0.0	10.2	13.1	4.3	4.2	11.9	0.4	0.2
Initial Q Delay(d3),s/veh	0.0	0.0	0.0	0.0	0.0	0.0	0.0	0.0	0.0	0.0	0.0	0.0
%ile BackOfQ(50%),veh/ln	1.3	1.2	0.7	0.7	0.0	5.5	1.5	6.7	6.8	4.1	0.1	0.0
Unsig. Movement Delay, s/veh												
LnGrp Delay(d),s/veh	34.8	22.2	21.7	24.2	0.0	35.5	45.9	20.0	19.9	34.5	0.4	0.2
LnGrp LOS	C	C	C	C	A	D	D	C	B	C	A	A
Approach Vol, veh/h		216			346			1096			1095	
Approach Delay, s/veh		26.3			33.9			21.7			8.4	
Approach LOS		C			C			C			A	

Timer - Assigned Phs	1	2		4	5	6		8
Phs Duration (G+Y+Rc), s	15.6	34.4		20.0	7.6	42.4		20.0
Change Period (Y+Rc), s	4.0	4.0		4.0	4.0	4.0		4.0
Max Green Setting (Gmax), s	15.0	27.0		16.0	7.0	35.0		16.0
Max Q Clear Time (g_c+I1), s	11.5	17.8		18.0	4.8	2.0		13.8
Green Ext Time (p_c), s	0.3	4.4		0.0	0.0	6.4		0.4

Intersection Summary		
HCM 6th Ctrl Delay		18.3
HCM 6th LOS		B

Intersection	
Int Delay, s/veh	0.8

Movement	EBL	EBR	NBL	NBT	SBT	SBR
Lane Configurations						
Traffic Vol, veh/h	9	0	1	91	39	15
Future Vol, veh/h	9	0	1	91	39	15
Conflicting Peds, #/hr	0	0	0	0	0	0
Sign Control	Stop	Stop	Free	Free	Free	Free
RT Channelized	-	None	-	None	-	None
Storage Length	0	-	-	-	-	-
Veh in Median Storage, #	0	-	-	0	0	-
Grade, %	0	-	-	0	0	-
Peak Hour Factor	56	25	25	76	75	54
Heavy Vehicles, %	2	2	2	2	2	2
Mvmt Flow	16	0	4	120	52	28

Major/Minor	Minor2		Major1		Major2	
Conflicting Flow All	194	66	80	0	-	0
Stage 1	66	-	-	-	-	-
Stage 2	128	-	-	-	-	-
Critical Hdwy	6.42	6.22	4.12	-	-	-
Critical Hdwy Stg 1	5.42	-	-	-	-	-
Critical Hdwy Stg 2	5.42	-	-	-	-	-
Follow-up Hdwy	3.518	3.318	2.218	-	-	-
Pot Cap-1 Maneuver	795	998	1518	-	-	-
Stage 1	957	-	-	-	-	-
Stage 2	898	-	-	-	-	-
Platoon blocked, %				-	-	-
Mov Cap-1 Maneuver	793	998	1518	-	-	-
Mov Cap-2 Maneuver	793	-	-	-	-	-
Stage 1	954	-	-	-	-	-
Stage 2	898	-	-	-	-	-

Approach	EB	NB	SB
HCM Control Delay, s	9.6	0.2	0
HCM LOS	A		

Minor Lane/Major Mvmt	NBL	NBT	EBLn1	SBT	SBR
Capacity (veh/h)	1518	-	793	-	-
HCM Lane V/C Ratio	0.003	-	0.02	-	-
HCM Control Delay (s)	7.4	0	9.6	-	-
HCM Lane LOS	A	A	A	-	-
HCM 95th %tile Q(veh)	0	-	0.1	-	-

Intersection	
Int Delay, s/veh	0.1

Movement	EBL	EBT	EBR	WBL	WBT	WBR	NBL	NBT	NBR	SBL	SBT	SBR
Lane Configurations												
Traffic Vol, veh/h	1	0	0	11	0	2	0	78	11	4	67	0
Future Vol, veh/h	1	0	0	11	0	2	0	78	11	4	67	0
Conflicting Peds, #/hr	0	0	0	0	0	0	0	0	0	0	0	0
Sign Control	Free	Free	Free	Free	Free	Free	Stop	Stop	Stop	Stop	Stop	Stop
RT Channelized	-	-	None	-	-	None	-	-	None	-	-	None
Storage Length	-	-	-	-	-	-	-	-	-	-	-	-
Veh in Median Storage, #	-	0	-	-	0	-	-	0	-	-	0	-
Grade, %	-	0	-	-	0	-	-	0	-	-	0	-
Peak Hour Factor	25	25	25	55	25	25	25	81	55	50	76	25
Heavy Vehicles, %	2	2	2	2	2	2	2	2	2	2	2	2
Mvmt Flow	4	0	0	20	0	8	0	96	20	8	88	0

Major/Minor	Major1			Major2			Minor1			Minor2		
Conflicting Flow All	8	0	0	0	0	0	96	56	0	110	52	4
Stage 1	-	-	-	-	-	-	8	8	-	44	44	-
Stage 2	-	-	-	-	-	-	88	48	-	66	8	-
Critical Hdwy	4.12	-	-	4.12	-	-	7.12	6.52	6.22	7.12	6.52	6.22
Critical Hdwy Stg 1	-	-	-	-	-	-	6.12	5.52	-	6.12	5.52	-
Critical Hdwy Stg 2	-	-	-	-	-	-	6.12	5.52	-	6.12	5.52	-
Follow-up Hdwy	2.218	-	-	2.218	-	-	3.518	4.018	3.318	3.518	4.018	3.318
Pot Cap-1 Maneuver	1612	-	-	-	-	-	887	835	-	868	839	1080
Stage 1	-	-	-	-	-	-	1013	889	-	970	858	-
Stage 2	-	-	-	-	-	-	920	855	-	945	889	-
Platoon blocked, %		-	-		-	-						
Mov Cap-1 Maneuver	1612	-	-	-	-	-	814	833	-	-	837	1080
Mov Cap-2 Maneuver	-	-	-	-	-	-	814	833	-	-	837	-
Stage 1	-	-	-	-	-	-	1011	887	-	968	858	-
Stage 2	-	-	-	-	-	-	825	855	-	841	887	-

Approach	EB	WB	NB	SB
HCM Control Delay, s	7.2			
HCM LOS			-	-

Minor Lane/Major Mvmt	NBLn1	EBL	EBT	EBR	WBL	WBT	WBR	SBLn1
Capacity (veh/h)	-	1612	-	-	-	-	-	-
HCM Lane V/C Ratio	-	0.002	-	-	-	-	-	-
HCM Control Delay (s)	-	7.2	0	-	-	-	-	-
HCM Lane LOS	-	A	A	-	-	-	-	-
HCM 95th %tile Q(veh)	-	0	-	-	-	-	-	-

Movement	EBL	EBT	EBR	WBL	WBT	WBR	NBL	NBT	NBR	SBL	SBT	SBR
Lane Configurations												
Traffic Volume (veh/h)	221	76	41	41	55	187	16	878	21	107	788	141
Future Volume (veh/h)	221	76	41	41	55	187	16	878	21	107	788	141
Initial Q (Qb), veh	0	0	0	0	0	0	0	0	0	0	0	0
Ped-Bike Adj(A_pbT)	1.00		1.00	1.00		1.00	1.00		1.00	1.00		1.00
Parking Bus, Adj	1.00	1.00	1.00	1.00	1.00	1.00	1.00	1.00	1.00	1.00	1.00	1.00
Work Zone On Approach		No			No			No			No	
Adj Sat Flow, veh/h/ln	1870	1870	1870	1870	1870	1870	1870	1870	1870	1870	1870	1870
Adj Flow Rate, veh/h	295	106	48	65	86	275	32	987	48	160	821	183
Peak Hour Factor	0.75	0.72	0.85	0.63	0.64	0.68	0.50	0.89	0.44	0.67	0.96	0.77
Percent Heavy Veh, %	2	2	2	2	2	2	2	2	2	2	2	2
Cap, veh/h	309	636	539	83	84	267	46	1090	486	166	1080	241
Arrive On Green	0.17	0.34	0.34	0.05	0.21	0.21	0.03	0.31	0.31	0.09	0.37	0.37
Sat Flow, veh/h	1781	1870	1585	1781	392	1253	1781	3554	1585	1781	2888	644
Grp Volume(v), veh/h	295	106	48	65	0	361	32	987	48	160	505	499
Grp Sat Flow(s),veh/h/ln	1781	1870	1585	1781	0	1645	1781	1777	1585	1781	1777	1755
Q Serve(g_s), s	12.3	3.0	1.5	2.7	0.0	16.0	1.3	20.0	1.6	6.7	18.6	18.7
Cycle Q Clear(g_c), s	12.3	3.0	1.5	2.7	0.0	16.0	1.3	20.0	1.6	6.7	18.6	18.7
Prop In Lane	1.00		1.00	1.00		0.76	1.00		1.00	1.00		0.37
Lane Grp Cap(c), veh/h	309	636	539	83	0	351	46	1090	486	166	665	656
V/C Ratio(X)	0.96	0.17	0.09	0.78	0.00	1.03	0.69	0.91	0.10	0.96	0.76	0.76
Avail Cap(c_a), veh/h	309	636	539	166	0	351	95	1090	486	166	665	656
HCM Platoon Ratio	1.00	1.00	1.00	1.00	1.00	1.00	1.00	1.00	1.00	1.00	1.00	1.00
Upstream Filter(I)	1.00	1.00	1.00	1.00	0.00	1.00	0.64	0.64	0.64	1.00	1.00	1.00
Uniform Delay (d), s/veh	30.7	17.3	16.9	35.4	0.0	29.5	36.2	25.0	18.6	33.9	20.5	20.5
Incr Delay (d2), s/veh	39.3	0.1	0.1	14.5	0.0	55.6	11.2	8.5	0.3	58.5	8.0	8.1
Initial Q Delay(d3),s/veh	0.0	0.0	0.0	0.0	0.0	0.0	0.0	0.0	0.0	0.0	0.0	0.0
%ile BackOfQ(50%),veh/ln	8.4	1.2	0.5	1.5	0.0	11.4	0.7	9.2	0.6	5.5	8.6	8.6
Unsig. Movement Delay, s/veh												
LnGrp Delay(d),s/veh	70.0	17.4	16.9	49.8	0.0	85.1	47.4	33.4	18.8	92.4	28.5	28.6
LnGrp LOS	E	B	B	D	A	F	D	C	B	F	C	C
Approach Vol, veh/h		449			426			1067			1164	
Approach Delay, s/veh		51.9			79.8			33.2			37.3	
Approach LOS		D			E			C			D	

Timer - Assigned Phs	1	2	3	4	5	6	7	8
Phs Duration (G+Y+Rc), s	11.0	27.0	7.5	29.5	5.9	32.1	17.0	20.0
Change Period (Y+Rc), s	4.0	4.0	4.0	4.0	4.0	4.0	4.0	4.0
Max Green Setting (Gmax), s	7.0	23.0	7.0	22.0	4.0	26.0	13.0	16.0
Max Q Clear Time (g_c+I1), s	8.7	22.0	4.7	5.0	3.3	20.7	14.3	18.0
Green Ext Time (p_c), s	0.0	0.7	0.0	0.6	0.0	2.9	0.0	0.0

Intersection Summary	
HCM 6th Ctrl Delay	43.8
HCM 6th LOS	D

Intersection	
Int Delay, s/veh	5.9

Movement	EBL	EBT	EBR	WBL	WBT	WBR	NBL	NBT	NBR	SBL	SBT	SBR
Lane Configurations												
Traffic Vol, veh/h	6	26	3	122	14	11	7	130	148	22	162	7
Future Vol, veh/h	6	26	3	122	14	11	7	130	148	22	162	7
Conflicting Peds, #/hr	0	0	0	0	0	0	0	0	0	0	0	0
Sign Control	Stop	Stop	Stop	Stop	Stop	Stop	Free	Free	Free	Free	Free	Free
RT Channelized	-	-	None	-	-	None	-	-	None	-	-	None
Storage Length	-	-	-	-	-	-	-	-	-	-	-	-
Veh in Median Storage, #	-	0	-	-	0	-	-	0	-	-	0	-
Grade, %	-	0	-	-	0	-	-	0	-	-	0	-
Peak Hour Factor	50	59	38	88	70	69	58	81	54	69	84	58
Heavy Vehicles, %	2	2	2	2	2	2	2	2	2	2	2	2
Mvmt Flow	12	44	8	139	20	16	12	160	274	32	193	12

Major/Minor	Minor2			Minor1			Major1			Major2		
Conflicting Flow All	602	721	199	610	590	297	205	0	0	434	0	0
Stage 1	263	263	-	321	321	-	-	-	-	-	-	-
Stage 2	339	458	-	289	269	-	-	-	-	-	-	-
Critical Hdwy	7.12	6.52	6.22	7.12	6.52	6.22	4.12	-	-	4.12	-	-
Critical Hdwy Stg 1	6.12	5.52	-	6.12	5.52	-	-	-	-	-	-	-
Critical Hdwy Stg 2	6.12	5.52	-	6.12	5.52	-	-	-	-	-	-	-
Follow-up Hdwy	3.518	4.018	3.318	3.518	4.018	3.318	2.218	-	-	2.218	-	-
Pot Cap-1 Maneuver	412	353	842	407	420	742	1366	-	-	1126	-	-
Stage 1	742	691	-	691	652	-	-	-	-	-	-	-
Stage 2	676	567	-	719	687	-	-	-	-	-	-	-
Platoon blocked, %								-	-		-	-
Mov Cap-1 Maneuver	375	337	842	351	402	742	1366	-	-	1126	-	-
Mov Cap-2 Maneuver	375	337	-	351	402	-	-	-	-	-	-	-
Stage 1	733	669	-	683	644	-	-	-	-	-	-	-
Stage 2	633	560	-	644	665	-	-	-	-	-	-	-

Approach	EB	WB	NB	SB
HCM Control Delay, s	16.7	22.8	0.2	1.1
HCM LOS	C	C		

Minor Lane/Major Mvmt	NBL	NBT	NBR	EBLn1	WBLn1	SBL	SBT	SBR
Capacity (veh/h)	1366	-	-	372	374	1126	-	-
HCM Lane V/C Ratio	0.009	-	-	0.172	0.467	0.028	-	-
HCM Control Delay (s)	7.7	0	-	16.7	22.8	8.3	0	-
HCM Lane LOS	A	A	-	C	C	A	A	-
HCM 95th %tile Q(veh)	0	-	-	0.6	2.4	0.1	-	-

Intersection	
Int Delay, s/veh	4.8

Movement	EBL	EBT	WBT	WBR	SBL	SBR
Lane Configurations						
Traffic Vol, veh/h	85	131	112	173	52	31
Future Vol, veh/h	85	131	112	173	52	31
Conflicting Peds, #/hr	0	0	0	0	0	0
Sign Control	Free	Free	Free	Free	Stop	Stop
RT Channelized	-	None	-	None	-	None
Storage Length	-	-	-	-	0	-
Veh in Median Storage, #	-	0	0	-	0	-
Grade, %	-	0	0	-	0	-
Peak Hour Factor	42	92	55	48	72	50
Heavy Vehicles, %	2	2	2	2	2	2
Mvmt Flow	202	142	204	360	72	62

Major/Minor	Major1		Major2		Minor2	
Conflicting Flow All	564	0	-	0	930	384
Stage 1	-	-	-	-	384	-
Stage 2	-	-	-	-	546	-
Critical Hdwy	4.12	-	-	-	6.42	6.22
Critical Hdwy Stg 1	-	-	-	-	5.42	-
Critical Hdwy Stg 2	-	-	-	-	5.42	-
Follow-up Hdwy	2.218	-	-	-	3.518	3.318
Pot Cap-1 Maneuver	1008	-	-	-	297	664
Stage 1	-	-	-	-	688	-
Stage 2	-	-	-	-	580	-
Platoon blocked, %		-	-	-		
Mov Cap-1 Maneuver	1008	-	-	-	232	664
Mov Cap-2 Maneuver	-	-	-	-	232	-
Stage 1	-	-	-	-	538	-
Stage 2	-	-	-	-	580	-

Approach	EB	WB	SB
HCM Control Delay, s	5.6	0	23
HCM LOS			C

Minor Lane/Major Mvmt	EBL	EBT	WBT	WBR	SBLn1
Capacity (veh/h)	1008	-	-	-	332
HCM Lane V/C Ratio	0.201	-	-	-	0.404
HCM Control Delay (s)	9.5	0	-	-	23
HCM Lane LOS	A	A	-	-	C
HCM 95th %tile Q(veh)	0.7	-	-	-	1.9

Intersection	
Int Delay, s/veh	28.3

Movement	EBL	EBT	EBR	WBL	WBT	WBR	NBL	NBT	NBR	SBL	SBT	SBR
Lane Configurations												
Traffic Vol, veh/h	20	160	4	55	198	13	39	7	92	54	50	45
Future Vol, veh/h	20	160	4	55	198	13	39	7	92	54	50	45
Conflicting Peds, #/hr	0	0	0	0	0	0	0	0	0	0	0	0
Sign Control	Free	Free	Free	Free	Free	Free	Stop	Stop	Stop	Stop	Stop	Stop
RT Channelized	-	-	None	-	-	None	-	-	None	-	-	None
Storage Length	55	-	-	75	-	0	-	-	-	-	-	-
Veh in Median Storage, #	-	0	-	-	0	-	-	0	-	-	0	-
Grade, %	-	0	-	-	0	-	-	0	-	-	0	-
Peak Hour Factor	50	86	33	86	55	54	41	44	79	50	50	46
Heavy Vehicles, %	2	2	2	2	2	2	2	2	2	2	2	2
Mvmt Flow	40	186	12	64	360	24	95	16	116	108	100	98

Major/Minor	Major1			Major2			Minor1			Minor2		
Conflicting Flow All	384	0	0	198	0	0	871	784	192	826	766	360
Stage 1	-	-	-	-	-	-	272	272	-	488	488	-
Stage 2	-	-	-	-	-	-	599	512	-	338	278	-
Critical Hdwy	4.12	-	-	4.12	-	-	7.12	6.52	6.22	7.12	6.52	6.22
Critical Hdwy Stg 1	-	-	-	-	-	-	6.12	5.52	-	6.12	5.52	-
Critical Hdwy Stg 2	-	-	-	-	-	-	6.12	5.52	-	6.12	5.52	-
Follow-up Hdwy	2.218	-	-	2.218	-	-	3.518	4.018	3.318	3.518	4.018	3.318
Pot Cap-1 Maneuver	1174	-	-	1375	-	-	271	325	850	291	333	684
Stage 1	-	-	-	-	-	-	734	685	-	561	550	-
Stage 2	-	-	-	-	-	-	488	536	-	676	680	-
Platoon blocked, %		-	-		-	-						
Mov Cap-1 Maneuver	1174	-	-	1375	-	-	164	299	850	226	307	684
Mov Cap-2 Maneuver	-	-	-	-	-	-	164	299	-	226	307	-
Stage 1	-	-	-	-	-	-	709	662	-	542	524	-
Stage 2	-	-	-	-	-	-	323	511	-	550	657	-

Approach	EB	WB	NB	SB
HCM Control Delay, s	1.4	1.1	48.7	74.1
HCM LOS			E	F

Minor Lane/Major Mvmt	NBLn1	EBL	EBT	EBR	WBL	WBT	WBR	SBLn1
Capacity (veh/h)	295	1174	-	-	1375	-	-	323
HCM Lane V/C Ratio	0.771	0.034	-	-	0.047	-	-	0.947
HCM Control Delay (s)	48.7	8.2	-	-	7.7	-	-	74.1
HCM Lane LOS	E	A	-	-	A	-	-	F
HCM 95th %tile Q(veh)	5.9	0.1	-	-	0.1	-	-	9.7

Movement	EBL	EBT	EBR	WBL	WBT	WBR	NBL	NBT	NBR	SBL	SBT	SBR
Lane Configurations												
Traffic Volume (veh/h)	103	139	63	81	123	150	36	657	44	150	609	114
Future Volume (veh/h)	103	139	63	81	123	150	36	657	44	150	609	114
Initial Q (Qb), veh	0	0	0	0	0	0	0	0	0	0	0	0
Ped-Bike Adj(A_pbT)	1.00		1.00	1.00		1.00	1.00		1.00	1.00		1.00
Parking Bus, Adj	1.00	1.00	1.00	1.00	1.00	1.00	1.00	1.00	1.00	1.00	1.00	1.00
Work Zone On Approach		No			No			No			No	
Adj Sat Flow, veh/h/ln	1870	1870	1870	1870	1870	1870	1870	1870	1870	1870	1870	1870
Adj Flow Rate, veh/h	136	154	84	104	205	203	44	755	72	254	716	163
Peak Hour Factor	0.76	0.90	0.75	0.78	0.60	0.74	0.82	0.87	0.61	0.59	0.85	0.70
Percent Heavy Veh, %	2	2	2	2	2	2	2	2	2	2	2	2
Cap, veh/h	238	641	543	427	296	293	59	1044	100	298	1609	718
Arrive On Green	0.34	0.34	0.34	0.34	0.34	0.34	0.03	0.32	0.32	0.17	0.45	0.45
Sat Flow, veh/h	978	1870	1585	1142	863	854	1781	3278	313	1781	3554	1585
Grp Volume(v), veh/h	136	154	84	104	0	408	44	409	418	254	716	163
Grp Sat Flow(s),veh/h/ln	978	1870	1585	1142	0	1717	1781	1777	1814	1781	1777	1585
Q Serve(g_s), s	9.7	4.1	2.6	5.0	0.0	14.3	1.7	14.3	14.3	9.7	9.7	4.4
Cycle Q Clear(g_c), s	24.0	4.1	2.6	9.1	0.0	14.3	1.7	14.3	14.3	9.7	9.7	4.4
Prop In Lane	1.00		1.00	1.00		0.50	1.00		0.17	1.00		1.00
Lane Grp Cap(c), veh/h	238	641	543	427	0	589	59	566	578	298	1609	718
V/C Ratio(X)	0.57	0.24	0.15	0.24	0.00	0.69	0.75	0.72	0.72	0.85	0.44	0.23
Avail Cap(c_a), veh/h	238	641	543	427	0	589	153	566	578	331	1609	718
HCM Platoon Ratio	1.00	1.00	1.00	1.00	1.00	1.00	1.00	1.00	1.00	1.00	1.00	1.00
Upstream Filter(I)	1.00	1.00	1.00	1.00	0.00	1.00	1.00	1.00	1.00	0.76	0.76	0.76
Uniform Delay (d), s/veh	30.2	16.5	16.0	19.7	0.0	19.8	33.6	21.1	21.1	28.3	13.1	11.7
Incr Delay (d2), s/veh	3.3	0.2	0.1	0.3	0.0	3.5	17.4	7.8	7.7	13.9	0.7	0.6
Initial Q Delay(d3),s/veh	0.0	0.0	0.0	0.0	0.0	0.0	0.0	0.0	0.0	0.0	0.0	0.0
%ile BackOfQ(50%),veh/ln	2.4	1.7	0.9	1.3	0.0	5.9	1.0	6.7	6.9	5.1	3.6	1.5
Unsig. Movement Delay, s/veh												
LnGrp Delay(d),s/veh	33.5	16.7	16.1	20.0	0.0	23.3	51.0	28.9	28.8	42.2	13.8	12.2
LnGrp LOS	C	B	B	C	A	C	D	C	C	D	B	B
Approach Vol, veh/h		374			512			871			1133	
Approach Delay, s/veh		22.7			22.7			30.0			19.9	
Approach LOS		C			C			C			B	

Timer - Assigned Phs	1	2		4	5	6		8
Phs Duration (G+Y+Rc), s	15.7	26.3		28.0	6.3	35.7		28.0
Change Period (Y+Rc), s	4.0	4.0		4.0	4.0	4.0		4.0
Max Green Setting (Gmax), s	13.0	21.0		24.0	6.0	28.0		24.0
Max Q Clear Time (g_c+I1), s	11.7	16.3		26.0	3.7	11.7		16.3
Green Ext Time (p_c), s	0.1	2.2		0.0	0.0	5.1		1.9

Intersection Summary	
HCM 6th Ctrl Delay	23.8
HCM 6th LOS	C

Intersection	
Int Delay, s/veh	0.2

Movement	EBL	EBR	NBL	NBT	SBT	SBR
Lane Configurations						
Traffic Vol, veh/h	5	0	0	156	134	3
Future Vol, veh/h	5	0	0	156	134	3
Conflicting Peds, #/hr	0	0	0	0	0	0
Sign Control	Stop	Stop	Free	Free	Free	Free
RT Channelized	-	None	-	None	-	None
Storage Length	0	-	0	-	-	-
Veh in Median Storage, #	0	-	-	0	0	-
Grade, %	0	-	-	0	0	-
Peak Hour Factor	63	25	25	72	70	75
Heavy Vehicles, %	2	2	2	2	2	2
Mvmt Flow	8	0	0	217	191	4

Major/Minor	Minor2		Major1		Major2	
Conflicting Flow All	410	193	195	0	-	0
Stage 1	193	-	-	-	-	-
Stage 2	217	-	-	-	-	-
Critical Hdwy	6.42	6.22	4.12	-	-	-
Critical Hdwy Stg 1	5.42	-	-	-	-	-
Critical Hdwy Stg 2	5.42	-	-	-	-	-
Follow-up Hdwy	3.518	3.318	2.218	-	-	-
Pot Cap-1 Maneuver	598	849	1378	-	-	-
Stage 1	840	-	-	-	-	-
Stage 2	819	-	-	-	-	-
Platoon blocked, %				-	-	-
Mov Cap-1 Maneuver	598	849	1378	-	-	-
Mov Cap-2 Maneuver	598	-	-	-	-	-
Stage 1	840	-	-	-	-	-
Stage 2	819	-	-	-	-	-

Approach	EB	NB	SB
HCM Control Delay, s	11.1	0	0
HCM LOS	B		

Minor Lane/Major Mvmt	NBL	NBT	EBLn1	SBT	SBR
Capacity (veh/h)	1378	-	598	-	-
HCM Lane V/C Ratio	-	-	0.013	-	-
HCM Control Delay (s)	0	-	11.1	-	-
HCM Lane LOS	A	-	B	-	-
HCM 95th %tile Q(veh)	0	-	0	-	-

Intersection	
Int Delay, s/veh	0

Movement	EBL	EBT	EBR	WBL	WBT	WBR	NBL	NBT	NBR	SBL	SBT	SBR
Lane Configurations												
Traffic Vol, veh/h	1	0	0	17	0	66	0	122	8	55	107	0
Future Vol, veh/h	1	0	0	17	0	66	0	122	8	55	107	0
Conflicting Peds, #/hr	0	0	0	0	0	0	0	0	0	0	0	0
Sign Control	Free	Free	Free	Free	Free	Free	Stop	Stop	Stop	Stop	Stop	Stop
RT Channelized	-	-	None	-	-	None	-	-	None	-	-	None
Storage Length	-	-	-	-	-	-	-	-	-	-	-	-
Veh in Median Storage, #	-	0	-	-	0	-	-	0	-	-	0	-
Grade, %	-	0	-	-	0	-	-	0	-	-	0	-
Peak Hour Factor	25	25	25	85	25	50	25	88	50	35	80	25
Heavy Vehicles, %	2	2	2	2	2	2	2	2	2	2	2	2
Mvmt Flow	4	0	0	20	0	132	0	139	16	157	134	0

Major/Minor	Major1			Major2			Minor1			Minor2		
Conflicting Flow All	132	0	0	0	0	0	181	180	0	192	114	66
Stage 1	-	-	-	-	-	-	8	8	-	106	106	-
Stage 2	-	-	-	-	-	-	173	172	-	86	8	-
Critical Hdwy	4.12	-	-	4.12	-	-	7.12	6.52	6.22	7.12	6.52	6.22
Critical Hdwy Stg 1	-	-	-	-	-	-	6.12	5.52	-	6.12	5.52	-
Critical Hdwy Stg 2	-	-	-	-	-	-	6.12	5.52	-	6.12	5.52	-
Follow-up Hdwy	2.218	-	-	2.218	-	-	3.518	4.018	3.318	3.518	4.018	3.318
Pot Cap-1 Maneuver	1453	-	-	-	-	-	781	714	-	768	776	998
Stage 1	-	-	-	-	-	-	1013	889	-	900	807	-
Stage 2	-	-	-	-	-	-	829	756	-	922	889	-
Platoon blocked, %		-	-		-	-						
Mov Cap-1 Maneuver	1453	-	-	-	-	-	676	712	-	-	774	998
Mov Cap-2 Maneuver	-	-	-	-	-	-	676	712	-	-	774	-
Stage 1	-	-	-	-	-	-	1010	886	-	897	807	-
Stage 2	-	-	-	-	-	-	692	756	-	775	886	-

Approach	EB	WB	NB	SB
HCM Control Delay, s	7.5			
HCM LOS			-	-

Minor Lane/Major Mvmt	NBLn1	EBL	EBT	EBR	WBL	WBT	WBR	SBLn1
Capacity (veh/h)	-	1453	-	-	-	-	-	-
HCM Lane V/C Ratio	-	0.003	-	-	-	-	-	-
HCM Control Delay (s)	-	7.5	0	-	-	-	-	-
HCM Lane LOS	-	A	A	-	-	-	-	-
HCM 95th %tile Q(veh)	-	0	-	-	-	-	-	-

Intersection	
Int Delay, s/veh	5.9

Movement	WBL	WBR	NBT	NBR	SBL	SBT
Lane Configurations						
Traffic Vol, veh/h	48	132	102	54	149	86
Future Vol, veh/h	48	132	102	54	149	86
Conflicting Peds, #/hr	0	0	0	0	0	0
Sign Control	Stop	Stop	Free	Free	Free	Free
RT Channelized	-	None	-	None	-	None
Storage Length	0	-	-	-	0	-
Veh in Median Storage, #	0	-	0	-	-	0
Grade, %	0	-	0	-	-	0
Peak Hour Factor	92	92	92	92	92	92
Heavy Vehicles, %	2	2	2	2	2	2
Mvmt Flow	52	143	111	59	162	93

Major/Minor	Minor1		Major1		Major2	
Conflicting Flow All	558	141	0	0	170	0
Stage 1	141	-	-	-	-	-
Stage 2	417	-	-	-	-	-
Critical Hdwy	6.42	6.22	-	-	4.12	-
Critical Hdwy Stg 1	5.42	-	-	-	-	-
Critical Hdwy Stg 2	5.42	-	-	-	-	-
Follow-up Hdwy	3.518	3.318	-	-	2.218	-
Pot Cap-1 Maneuver	491	907	-	-	1407	-
Stage 1	886	-	-	-	-	-
Stage 2	665	-	-	-	-	-
Platoon blocked, %			-	-		-
Mov Cap-1 Maneuver	435	907	-	-	1407	-
Mov Cap-2 Maneuver	435	-	-	-	-	-
Stage 1	886	-	-	-	-	-
Stage 2	589	-	-	-	-	-

Approach	WB	NB	SB
HCM Control Delay, s	12.1	0	5
HCM LOS	B		

Minor Lane/Major Mvmt	NBT	NBR	WBLn1	SBL	SBT
Capacity (veh/h)	-	-	703	1407	-
HCM Lane V/C Ratio	-	-	0.278	0.115	-
HCM Control Delay (s)	-	-	12.1	7.9	-
HCM Lane LOS	-	-	B	A	-
HCM 95th %tile Q(veh)	-	-	1.1	0.4	-

Intersection	
Int Delay, s/veh	2.7

Movement	WBL	WBR	NBT	NBR	SBL	SBT
Lane Configurations						
Traffic Vol, veh/h	24	36	120	27	41	93
Future Vol, veh/h	24	36	120	27	41	93
Conflicting Peds, #/hr	0	0	0	0	0	0
Sign Control	Stop	Stop	Free	Free	Free	Free
RT Channelized	-	None	-	None	-	None
Storage Length	0	-	-	-	-	-
Veh in Median Storage, #	0	-	0	-	-	0
Grade, %	0	-	0	-	-	0
Peak Hour Factor	92	92	92	92	92	92
Heavy Vehicles, %	2	2	2	2	2	2
Mvmt Flow	26	39	130	29	45	101

Major/Minor	Minor1		Major1		Major2	
Conflicting Flow All	336	145	0	0	159	0
Stage 1	145	-	-	-	-	-
Stage 2	191	-	-	-	-	-
Critical Hdwy	6.42	6.22	-	-	4.12	-
Critical Hdwy Stg 1	5.42	-	-	-	-	-
Critical Hdwy Stg 2	5.42	-	-	-	-	-
Follow-up Hdwy	3.518	3.318	-	-	2.218	-
Pot Cap-1 Maneuver	659	902	-	-	1420	-
Stage 1	882	-	-	-	-	-
Stage 2	841	-	-	-	-	-
Platoon blocked, %			-	-		-
Mov Cap-1 Maneuver	637	902	-	-	1420	-
Mov Cap-2 Maneuver	637	-	-	-	-	-
Stage 1	882	-	-	-	-	-
Stage 2	812	-	-	-	-	-

Approach	WB	NB	SB
HCM Control Delay, s	10.1	0	2.3
HCM LOS	B		

Minor Lane/Major Mvmt	NBT	NBR	WBLn1	SBL	SBT
Capacity (veh/h)	-	-	773	1420	-
HCM Lane V/C Ratio	-	-	0.084	0.031	-
HCM Control Delay (s)	-	-	10.1	7.6	0
HCM Lane LOS	-	-	B	A	A
HCM 95th %tile Q(veh)	-	-	0.3	0.1	-

Movement	EBL	EBT	EBR	WBL	WBT	WBR	NBL	NBT	NBR	SBL	SBT	SBR
Lane Configurations												
Traffic Volume (veh/h)	221	76	41	41	55	187	16	878	21	107	788	141
Future Volume (veh/h)	221	76	41	41	55	187	16	878	21	107	788	141
Initial Q (Qb), veh	0	0	0	0	0	0	0	0	0	0	0	0
Ped-Bike Adj(A_pbT)	1.00		1.00	1.00		1.00	1.00		1.00	1.00		1.00
Parking Bus, Adj	1.00	1.00	1.00	1.00	1.00	1.00	1.00	1.00	1.00	1.00	1.00	1.00
Work Zone On Approach		No			No			No			No	
Adj Sat Flow, veh/h/ln	1870	1870	1870	1870	1870	1870	1870	1870	1870	1870	1870	1870
Adj Flow Rate, veh/h	295	106	48	65	86	275	32	987	48	160	821	183
Peak Hour Factor	0.75	0.72	0.85	0.63	0.64	0.68	0.50	0.89	0.44	0.67	0.96	0.77
Percent Heavy Veh, %	2	2	2	2	2	2	2	2	2	2	2	2
Cap, veh/h	309	636	539	83	84	267	46	1090	486	166	1080	241
Arrive On Green	0.17	0.34	0.34	0.05	0.21	0.21	0.03	0.31	0.31	0.09	0.37	0.37
Sat Flow, veh/h	1781	1870	1585	1781	392	1253	1781	3554	1585	1781	2888	644
Grp Volume(v), veh/h	295	106	48	65	0	361	32	987	48	160	505	499
Grp Sat Flow(s),veh/h/ln	1781	1870	1585	1781	0	1645	1781	1777	1585	1781	1777	1755
Q Serve(g_s), s	12.3	3.0	1.5	2.7	0.0	16.0	1.3	20.0	1.6	6.7	18.6	18.7
Cycle Q Clear(g_c), s	12.3	3.0	1.5	2.7	0.0	16.0	1.3	20.0	1.6	6.7	18.6	18.7
Prop In Lane	1.00		1.00	1.00		0.76	1.00		1.00	1.00		0.37
Lane Grp Cap(c), veh/h	309	636	539	83	0	351	46	1090	486	166	665	656
V/C Ratio(X)	0.96	0.17	0.09	0.78	0.00	1.03	0.69	0.91	0.10	0.96	0.76	0.76
Avail Cap(c_a), veh/h	309	636	539	166	0	351	95	1090	486	166	665	656
HCM Platoon Ratio	1.00	1.00	1.00	1.00	1.00	1.00	1.00	1.00	1.00	1.00	1.00	1.00
Upstream Filter(I)	1.00	1.00	1.00	1.00	0.00	1.00	0.64	0.64	0.64	1.00	1.00	1.00
Uniform Delay (d), s/veh	30.7	17.3	16.9	35.4	0.0	29.5	36.2	25.0	18.6	33.9	20.5	20.5
Incr Delay (d2), s/veh	39.3	0.1	0.1	14.5	0.0	55.6	11.2	8.5	0.3	58.5	8.0	8.1
Initial Q Delay(d3),s/veh	0.0	0.0	0.0	0.0	0.0	0.0	0.0	0.0	0.0	0.0	0.0	0.0
%ile BackOfQ(50%),veh/ln	8.4	1.2	0.5	1.5	0.0	11.4	0.7	9.2	0.6	5.5	8.6	8.6
Unsig. Movement Delay, s/veh												
LnGrp Delay(d),s/veh	70.0	17.4	16.9	49.8	0.0	85.1	47.4	33.4	18.8	92.4	28.5	28.6
LnGrp LOS	E	B	B	D	A	F	D	C	B	F	C	C
Approach Vol, veh/h		449			426			1067			1164	
Approach Delay, s/veh		51.9			79.8			33.2			37.3	
Approach LOS		D			E			C			D	

Timer - Assigned Phs	1	2	3	4	5	6	7	8
Phs Duration (G+Y+Rc), s	11.0	27.0	7.5	29.5	5.9	32.1	17.0	20.0
Change Period (Y+Rc), s	4.0	4.0	4.0	4.0	4.0	4.0	4.0	4.0
Max Green Setting (Gmax), s	7.0	23.0	7.0	22.0	4.0	26.0	13.0	16.0
Max Q Clear Time (g_c+I1), s	8.7	22.0	4.7	5.0	3.3	20.7	14.3	18.0
Green Ext Time (p_c), s	0.0	0.7	0.0	0.6	0.0	2.9	0.0	0.0

Intersection Summary	
HCM 6th Ctrl Delay	43.8
HCM 6th LOS	D

Intersection	
Int Delay, s/veh	5.9

Movement	EBL	EBT	EBR	WBL	WBT	WBR	NBL	NBT	NBR	SBL	SBT	SBR
Lane Configurations												
Traffic Vol, veh/h	6	26	3	122	14	11	7	130	148	22	162	7
Future Vol, veh/h	6	26	3	122	14	11	7	130	148	22	162	7
Conflicting Peds, #/hr	0	0	0	0	0	0	0	0	0	0	0	0
Sign Control	Stop	Stop	Stop	Stop	Stop	Stop	Free	Free	Free	Free	Free	Free
RT Channelized	-	-	None	-	-	None	-	-	None	-	-	None
Storage Length	-	-	-	-	-	-	-	-	-	-	-	-
Veh in Median Storage, #	-	0	-	-	0	-	-	0	-	-	0	-
Grade, %	-	0	-	-	0	-	-	0	-	-	0	-
Peak Hour Factor	50	59	38	88	70	69	58	81	54	69	84	58
Heavy Vehicles, %	2	2	2	2	2	2	2	2	2	2	2	2
Mvmt Flow	12	44	8	139	20	16	12	160	274	32	193	12

Major/Minor	Minor2			Minor1			Major1			Major2		
Conflicting Flow All	602	721	199	610	590	297	205	0	0	434	0	0
Stage 1	263	263	-	321	321	-	-	-	-	-	-	-
Stage 2	339	458	-	289	269	-	-	-	-	-	-	-
Critical Hdwy	7.12	6.52	6.22	7.12	6.52	6.22	4.12	-	-	4.12	-	-
Critical Hdwy Stg 1	6.12	5.52	-	6.12	5.52	-	-	-	-	-	-	-
Critical Hdwy Stg 2	6.12	5.52	-	6.12	5.52	-	-	-	-	-	-	-
Follow-up Hdwy	3.518	4.018	3.318	3.518	4.018	3.318	2.218	-	-	2.218	-	-
Pot Cap-1 Maneuver	412	353	842	407	420	742	1366	-	-	1126	-	-
Stage 1	742	691	-	691	652	-	-	-	-	-	-	-
Stage 2	676	567	-	719	687	-	-	-	-	-	-	-
Platoon blocked, %								-	-		-	-
Mov Cap-1 Maneuver	375	337	842	351	402	742	1366	-	-	1126	-	-
Mov Cap-2 Maneuver	375	337	-	351	402	-	-	-	-	-	-	-
Stage 1	733	669	-	683	644	-	-	-	-	-	-	-
Stage 2	633	560	-	644	665	-	-	-	-	-	-	-

Approach	EB	WB	NB	SB
HCM Control Delay, s	16.7	22.8	0.2	1.1
HCM LOS	C	C		

Minor Lane/Major Mvmt	NBL	NBT	NBR	EBLn1	WBLn1	SBL	SBT	SBR
Capacity (veh/h)	1366	-	-	372	374	1126	-	-
HCM Lane V/C Ratio	0.009	-	-	0.172	0.467	0.028	-	-
HCM Control Delay (s)	7.7	0	-	16.7	22.8	8.3	0	-
HCM Lane LOS	A	A	-	C	C	A	A	-
HCM 95th %tile Q(veh)	0	-	-	0.6	2.4	0.1	-	-

Intersection	
Int Delay, s/veh	4.8

Movement	EBL	EBT	WBT	WBR	SBL	SBR
Lane Configurations						
Traffic Vol, veh/h	85	131	112	173	52	31
Future Vol, veh/h	85	131	112	173	52	31
Conflicting Peds, #/hr	0	0	0	0	0	0
Sign Control	Free	Free	Free	Free	Stop	Stop
RT Channelized	-	None	-	None	-	None
Storage Length	-	-	-	-	0	-
Veh in Median Storage, #	-	0	0	-	0	-
Grade, %	-	0	0	-	0	-
Peak Hour Factor	42	92	55	48	72	50
Heavy Vehicles, %	2	2	2	2	2	2
Mvmt Flow	202	142	204	360	72	62

Major/Minor	Major1		Major2		Minor2	
Conflicting Flow All	564	0	-	0	930	384
Stage 1	-	-	-	-	384	-
Stage 2	-	-	-	-	546	-
Critical Hdwy	4.12	-	-	-	6.42	6.22
Critical Hdwy Stg 1	-	-	-	-	5.42	-
Critical Hdwy Stg 2	-	-	-	-	5.42	-
Follow-up Hdwy	2.218	-	-	-	3.518	3.318
Pot Cap-1 Maneuver	1008	-	-	-	297	664
Stage 1	-	-	-	-	688	-
Stage 2	-	-	-	-	580	-
Platoon blocked, %		-	-	-		
Mov Cap-1 Maneuver	1008	-	-	-	232	664
Mov Cap-2 Maneuver	-	-	-	-	232	-
Stage 1	-	-	-	-	538	-
Stage 2	-	-	-	-	580	-

Approach	EB	WB	SB
HCM Control Delay, s	5.6	0	23
HCM LOS			C

Minor Lane/Major Mvmt	EBL	EBT	WBT	WBR	SBLn1
Capacity (veh/h)	1008	-	-	-	332
HCM Lane V/C Ratio	0.201	-	-	-	0.404
HCM Control Delay (s)	9.5	0	-	-	23
HCM Lane LOS	A	A	-	-	C
HCM 95th %tile Q(veh)	0.7	-	-	-	1.9

Intersection	
Intersection Delay, s/veh	20.1
Intersection LOS	C

Movement	EBL	EBT	EBR	WBL	WBT	WBR	NBL	NBT	NBR	SBL	SBT	SBR
Lane Configurations												
Traffic Vol, veh/h	20	160	4	55	198	13	39	7	92	54	50	45
Future Vol, veh/h	20	160	4	55	198	13	39	7	92	54	50	45
Peak Hour Factor	0.50	0.86	0.33	0.86	0.55	0.54	0.41	0.44	0.79	0.50	0.50	0.46
Heavy Vehicles, %	2	2	2	2	2	2	2	2	2	2	2	2
Mvmt Flow	40	186	12	64	360	24	95	16	116	108	100	98
Number of Lanes	1	1	0	1	1	1	0	1	0	0	1	0

Approach	EB	WB	NB	SB
Opposing Approach	WB	EB	SB	NB
Opposing Lanes	3	2	1	1
Conflicting Approach Left	SB	NB	EB	WB
Conflicting Lanes Left	1	1	2	3
Conflicting Approach Right	NB	SB	WB	EB
Conflicting Lanes Right	1	1	3	2
HCM Control Delay	16.4	22.9	16.3	21.7
HCM LOS	C	C	C	C

Lane	NBLn1	EBLn1	EBLn2	WBLn1	WBLn2	WBLn3	SBLn1
Vol Left, %	28%	100%	0%	100%	0%	0%	36%
Vol Thru, %	5%	0%	98%	0%	100%	0%	34%
Vol Right, %	67%	0%	2%	0%	0%	100%	30%
Sign Control	Stop	Stop	Stop	Stop	Stop	Stop	Stop
Traffic Vol by Lane	138	20	164	55	198	13	149
LT Vol	39	20	0	55	0	0	54
Through Vol	7	0	160	0	198	0	50
RT Vol	92	0	4	0	0	13	45
Lane Flow Rate	227	40	198	64	360	24	306
Geometry Grp	7	8	8	7	7	7	7
Degree of Util (X)	0.462	0.096	0.444	0.136	0.713	0.043	0.625
Departure Headway (Hd)	7.305	8.607	8.07	7.641	7.127	6.407	7.363
Convergence, Y/N	Yes	Yes	Yes	Yes	Yes	Yes	Yes
Cap	491	414	444	468	504	556	489
Service Time	5.083	6.396	5.858	5.412	4.898	4.178	5.137
HCM Lane V/C Ratio	0.462	0.097	0.446	0.137	0.714	0.043	0.626
HCM Control Delay	16.3	12.3	17.2	11.6	25.8	9.5	21.7
HCM Lane LOS	C	B	C	B	D	A	C
HCM 95th-tile Q	2.4	0.3	2.2	0.5	5.7	0.1	4.2

Movement	EBL	EBT	EBR	WBL	WBT	WBR	NBL	NBT	NBR	SBL	SBT	SBR
Lane Configurations												
Traffic Volume (veh/h)	103	139	63	81	123	150	36	657	44	150	609	114
Future Volume (veh/h)	103	139	63	81	123	150	36	657	44	150	609	114
Initial Q (Qb), veh	0	0	0	0	0	0	0	0	0	0	0	0
Ped-Bike Adj(A_pbT)	1.00		1.00	1.00		1.00	1.00		1.00	1.00		1.00
Parking Bus, Adj	1.00	1.00	1.00	1.00	1.00	1.00	1.00	1.00	1.00	1.00	1.00	1.00
Work Zone On Approach		No			No			No			No	
Adj Sat Flow, veh/h/ln	1870	1870	1870	1870	1870	1870	1870	1870	1870	1870	1870	1870
Adj Flow Rate, veh/h	136	154	84	104	205	203	44	755	72	254	716	163
Peak Hour Factor	0.76	0.90	0.75	0.78	0.60	0.74	0.82	0.87	0.61	0.59	0.85	0.70
Percent Heavy Veh, %	2	2	2	2	2	2	2	2	2	2	2	2
Cap, veh/h	238	641	543	427	296	293	59	1044	100	298	1609	718
Arrive On Green	0.34	0.34	0.34	0.34	0.34	0.34	0.03	0.32	0.32	0.17	0.45	0.45
Sat Flow, veh/h	978	1870	1585	1142	863	854	1781	3278	313	1781	3554	1585
Grp Volume(v), veh/h	136	154	84	104	0	408	44	409	418	254	716	163
Grp Sat Flow(s),veh/h/ln	978	1870	1585	1142	0	1717	1781	1777	1814	1781	1777	1585
Q Serve(g_s), s	9.7	4.1	2.6	5.0	0.0	14.3	1.7	14.3	14.3	9.7	9.7	4.4
Cycle Q Clear(g_c), s	24.0	4.1	2.6	9.1	0.0	14.3	1.7	14.3	14.3	9.7	9.7	4.4
Prop In Lane	1.00		1.00	1.00		0.50	1.00		0.17	1.00		1.00
Lane Grp Cap(c), veh/h	238	641	543	427	0	589	59	566	578	298	1609	718
V/C Ratio(X)	0.57	0.24	0.15	0.24	0.00	0.69	0.75	0.72	0.72	0.85	0.44	0.23
Avail Cap(c_a), veh/h	238	641	543	427	0	589	153	566	578	331	1609	718
HCM Platoon Ratio	1.00	1.00	1.00	1.00	1.00	1.00	1.00	1.00	1.00	1.00	1.00	1.00
Upstream Filter(I)	1.00	1.00	1.00	1.00	0.00	1.00	1.00	1.00	1.00	0.76	0.76	0.76
Uniform Delay (d), s/veh	30.2	16.5	16.0	19.7	0.0	19.8	33.6	21.1	21.1	28.3	13.1	11.7
Incr Delay (d2), s/veh	3.3	0.2	0.1	0.3	0.0	3.5	17.4	7.8	7.7	13.9	0.7	0.6
Initial Q Delay(d3),s/veh	0.0	0.0	0.0	0.0	0.0	0.0	0.0	0.0	0.0	0.0	0.0	0.0
%ile BackOfQ(50%),veh/ln	2.4	1.7	0.9	1.3	0.0	5.9	1.0	6.7	6.9	5.1	3.6	1.5
Unsig. Movement Delay, s/veh												
LnGrp Delay(d),s/veh	33.5	16.7	16.1	20.0	0.0	23.3	51.0	28.9	28.8	42.2	13.8	12.2
LnGrp LOS	C	B	B	C	A	C	D	C	C	D	B	B
Approach Vol, veh/h		374			512			871			1133	
Approach Delay, s/veh		22.7			22.7			30.0			19.9	
Approach LOS		C			C			C			B	

Timer - Assigned Phs	1	2		4	5	6		8
Phs Duration (G+Y+Rc), s	15.7	26.3		28.0	6.3	35.7		28.0
Change Period (Y+Rc), s	4.0	4.0		4.0	4.0	4.0		4.0
Max Green Setting (Gmax), s	13.6	21.0		24.0	6.0	28.0		24.0
Max Q Clear Time (g_c+I1), s	11.7	16.3		26.0	3.7	11.7		16.3
Green Ext Time (p_c), s	0.1	2.2		0.0	0.0	5.1		1.9

Intersection Summary	
HCM 6th Ctrl Delay	23.8
HCM 6th LOS	C

Intersection	
Int Delay, s/veh	0.2

Movement	EBL	EBR	NBL	NBT	SBT	SBR
Lane Configurations						
Traffic Vol, veh/h	5	0	0	156	134	3
Future Vol, veh/h	5	0	0	156	134	3
Conflicting Peds, #/hr	0	0	0	0	0	0
Sign Control	Stop	Stop	Free	Free	Free	Free
RT Channelized	-	None	-	None	-	None
Storage Length	0	-	0	-	-	-
Veh in Median Storage, #	0	-	-	0	0	-
Grade, %	0	-	-	0	0	-
Peak Hour Factor	63	25	25	72	70	75
Heavy Vehicles, %	2	2	2	2	2	2
Mvmt Flow	8	0	0	217	191	4

Major/Minor	Minor2		Major1		Major2	
Conflicting Flow All	410	193	195	0	-	0
Stage 1	193	-	-	-	-	-
Stage 2	217	-	-	-	-	-
Critical Hdwy	6.42	6.22	4.12	-	-	-
Critical Hdwy Stg 1	5.42	-	-	-	-	-
Critical Hdwy Stg 2	5.42	-	-	-	-	-
Follow-up Hdwy	3.518	3.318	2.218	-	-	-
Pot Cap-1 Maneuver	598	849	1378	-	-	-
Stage 1	840	-	-	-	-	-
Stage 2	819	-	-	-	-	-
Platoon blocked, %				-	-	-
Mov Cap-1 Maneuver	598	849	1378	-	-	-
Mov Cap-2 Maneuver	598	-	-	-	-	-
Stage 1	840	-	-	-	-	-
Stage 2	819	-	-	-	-	-

Approach	EB	NB	SB
HCM Control Delay, s	11.1	0	0
HCM LOS	B		

Minor Lane/Major Mvmt	NBL	NBT	EBLn1	SBT	SBR
Capacity (veh/h)	1378	-	598	-	-
HCM Lane V/C Ratio	-	-	0.013	-	-
HCM Control Delay (s)	0	-	11.1	-	-
HCM Lane LOS	A	-	B	-	-
HCM 95th %tile Q(veh)	0	-	0	-	-

Intersection	
Int Delay, s/veh	0

Movement	EBL	EBT	EBR	WBL	WBT	WBR	NBL	NBT	NBR	SBL	SBT	SBR
Lane Configurations												
Traffic Vol, veh/h	1	0	0	17	0	66	0	122	8	55	107	0
Future Vol, veh/h	1	0	0	17	0	66	0	122	8	55	107	0
Conflicting Peds, #/hr	0	0	0	0	0	0	0	0	0	0	0	0
Sign Control	Free	Free	Free	Free	Free	Free	Stop	Stop	Stop	Stop	Stop	Stop
RT Channelized	-	-	None	-	-	None	-	-	None	-	-	None
Storage Length	-	-	-	-	-	-	-	-	-	-	-	-
Veh in Median Storage, #	-	0	-	-	0	-	-	0	-	-	0	-
Grade, %	-	0	-	-	0	-	-	0	-	-	0	-
Peak Hour Factor	25	25	25	85	25	50	25	88	50	35	80	25
Heavy Vehicles, %	2	2	2	2	2	2	2	2	2	2	2	2
Mvmt Flow	4	0	0	20	0	132	0	139	16	157	134	0

Major/Minor	Major1			Major2			Minor1			Minor2		
Conflicting Flow All	132	0	0	0	0	0	181	180	0	192	114	66
Stage 1	-	-	-	-	-	-	8	8	-	106	106	-
Stage 2	-	-	-	-	-	-	173	172	-	86	8	-
Critical Hdwy	4.12	-	-	4.12	-	-	7.12	6.52	6.22	7.12	6.52	6.22
Critical Hdwy Stg 1	-	-	-	-	-	-	6.12	5.52	-	6.12	5.52	-
Critical Hdwy Stg 2	-	-	-	-	-	-	6.12	5.52	-	6.12	5.52	-
Follow-up Hdwy	2.218	-	-	2.218	-	-	3.518	4.018	3.318	3.518	4.018	3.318
Pot Cap-1 Maneuver	1453	-	-	-	-	-	781	714	-	768	776	998
Stage 1	-	-	-	-	-	-	1013	889	-	900	807	-
Stage 2	-	-	-	-	-	-	829	756	-	922	889	-
Platoon blocked, %		-	-		-	-						
Mov Cap-1 Maneuver	1453	-	-	-	-	-	676	712	-	-	774	998
Mov Cap-2 Maneuver	-	-	-	-	-	-	676	712	-	-	774	-
Stage 1	-	-	-	-	-	-	1010	886	-	897	807	-
Stage 2	-	-	-	-	-	-	692	756	-	775	886	-

Approach	EB	WB	NB	SB
HCM Control Delay, s	7.5			
HCM LOS			-	-

Minor Lane/Major Mvmt	NBLn1	EBL	EBT	EBR	WBL	WBT	WBR	SBLn1
Capacity (veh/h)	-	1453	-	-	-	-	-	-
HCM Lane V/C Ratio	-	0.003	-	-	-	-	-	-
HCM Control Delay (s)	-	7.5	0	-	-	-	-	-
HCM Lane LOS	-	A	A	-	-	-	-	-
HCM 95th %tile Q(veh)	-	0	-	-	-	-	-	-

Intersection	
Int Delay, s/veh	5.9

Movement	WBL	WBR	NBT	NBR	SBL	SBT
Lane Configurations						
Traffic Vol, veh/h	48	132	102	54	149	86
Future Vol, veh/h	48	132	102	54	149	86
Conflicting Peds, #/hr	0	0	0	0	0	0
Sign Control	Stop	Stop	Free	Free	Free	Free
RT Channelized	-	None	-	None	-	None
Storage Length	0	-	-	-	0	-
Veh in Median Storage, #	0	-	0	-	-	0
Grade, %	0	-	0	-	-	0
Peak Hour Factor	92	92	92	92	92	92
Heavy Vehicles, %	2	2	2	2	2	2
Mvmt Flow	52	143	111	59	162	93

Major/Minor	Minor1		Major1		Major2	
Conflicting Flow All	558	141	0	0	170	0
Stage 1	141	-	-	-	-	-
Stage 2	417	-	-	-	-	-
Critical Hdwy	6.42	6.22	-	-	4.12	-
Critical Hdwy Stg 1	5.42	-	-	-	-	-
Critical Hdwy Stg 2	5.42	-	-	-	-	-
Follow-up Hdwy	3.518	3.318	-	-	2.218	-
Pot Cap-1 Maneuver	491	907	-	-	1407	-
Stage 1	886	-	-	-	-	-
Stage 2	665	-	-	-	-	-
Platoon blocked, %			-	-		-
Mov Cap-1 Maneuver	435	907	-	-	1407	-
Mov Cap-2 Maneuver	435	-	-	-	-	-
Stage 1	886	-	-	-	-	-
Stage 2	589	-	-	-	-	-

Approach	WB	NB	SB
HCM Control Delay, s	12.1	0	5
HCM LOS	B		

Minor Lane/Major Mvmt	NBT	NBR	WBLn1	SBL	SBT
Capacity (veh/h)	-	-	703	1407	-
HCM Lane V/C Ratio	-	-	0.278	0.115	-
HCM Control Delay (s)	-	-	12.1	7.9	-
HCM Lane LOS	-	-	B	A	-
HCM 95th %tile Q(veh)	-	-	1.1	0.4	-

Intersection	
Int Delay, s/veh	2.7

Movement	WBL	WBR	NBT	NBR	SBL	SBT
Lane Configurations						
Traffic Vol, veh/h	24	36	120	27	41	93
Future Vol, veh/h	24	36	120	27	41	93
Conflicting Peds, #/hr	0	0	0	0	0	0
Sign Control	Stop	Stop	Free	Free	Free	Free
RT Channelized	-	None	-	None	-	None
Storage Length	0	-	-	-	-	-
Veh in Median Storage, #	0	-	0	-	-	0
Grade, %	0	-	0	-	-	0
Peak Hour Factor	92	92	92	92	92	92
Heavy Vehicles, %	2	2	2	2	2	2
Mvmt Flow	26	39	130	29	45	101

Major/Minor	Minor1		Major1		Major2	
Conflicting Flow All	336	145	0	0	159	0
Stage 1	145	-	-	-	-	-
Stage 2	191	-	-	-	-	-
Critical Hdwy	6.42	6.22	-	-	4.12	-
Critical Hdwy Stg 1	5.42	-	-	-	-	-
Critical Hdwy Stg 2	5.42	-	-	-	-	-
Follow-up Hdwy	3.518	3.318	-	-	2.218	-
Pot Cap-1 Maneuver	659	902	-	-	1420	-
Stage 1	882	-	-	-	-	-
Stage 2	841	-	-	-	-	-
Platoon blocked, %			-	-		-
Mov Cap-1 Maneuver	637	902	-	-	1420	-
Mov Cap-2 Maneuver	637	-	-	-	-	-
Stage 1	882	-	-	-	-	-
Stage 2	812	-	-	-	-	-

Approach	WB	NB	SB
HCM Control Delay, s	10.1	0	2.3
HCM LOS	B		

Minor Lane/Major Mvmt	NBT	NBR	WBLn1	SBL	SBT
Capacity (veh/h)	-	-	773	1420	-
HCM Lane V/C Ratio	-	-	0.084	0.031	-
HCM Control Delay (s)	-	-	10.1	7.6	0
HCM Lane LOS	-	-	B	A	A
HCM 95th %tile Q(veh)	-	-	0.3	0.1	-

Movement	EBL	EBT	EBR	WBL	WBT	WBR	NBL	NBT	NBR	SBL	SBT	SBR
Lane Configurations												
Traffic Volume (veh/h)	132	51	32	8	55	92	36	1014	20	88	928	192
Future Volume (veh/h)	132	51	32	8	55	92	36	1014	20	88	928	192
Initial Q (Qb), veh	0	0	0	0	0	0	0	0	0	0	0	0
Ped-Bike Adj(A_pbT)	1.00		1.00	1.00		1.00	1.00		1.00	1.00		1.00
Parking Bus, Adj	1.00	1.00	1.00	1.00	1.00	1.00	1.00	1.00	1.00	1.00	1.00	1.00
Work Zone On Approach		No			No			No			No	
Adj Sat Flow, veh/h/ln	1870	1870	1870	1870	1870	1870	1870	1870	1870	1870	1870	1870
Adj Flow Rate, veh/h	165	84	40	12	87	116	48	1067	28	104	1020	226
Peak Hour Factor	0.80	0.61	0.80	0.67	0.63	0.79	0.75	0.95	0.71	0.85	0.91	0.85
Percent Heavy Veh, %	2	2	2	2	2	2	2	2	2	2	2	2
Cap, veh/h	178	448	380	21	110	147	62	1594	711	127	1404	310
Arrive On Green	0.10	0.24	0.24	0.01	0.15	0.15	0.01	0.15	0.15	0.07	0.49	0.49
Sat Flow, veh/h	1781	1870	1585	1781	727	969	1781	3554	1585	1781	2893	639
Grp Volume(v), veh/h	165	84	40	12	0	203	48	1067	28	104	625	621
Grp Sat Flow(s),veh/h/ln	1781	1870	1585	1781	0	1696	1781	1777	1585	1781	1777	1755
Q Serve(g_s), s	6.4	2.5	1.4	0.5	0.0	8.1	1.9	19.9	1.1	4.0	19.6	19.7
Cycle Q Clear(g_c), s	6.4	2.5	1.4	0.5	0.0	8.1	1.9	19.9	1.1	4.0	19.6	19.7
Prop In Lane	1.00		1.00	1.00		0.57	1.00		1.00	1.00		0.36
Lane Grp Cap(c), veh/h	178	448	380	21	0	257	62	1594	711	127	863	852
V/C Ratio(X)	0.93	0.19	0.11	0.57	0.00	0.79	0.78	0.67	0.04	0.82	0.72	0.73
Avail Cap(c_a), veh/h	178	508	430	102	0	388	102	1594	711	127	863	852
HCM Platoon Ratio	1.00	1.00	1.00	1.00	1.00	1.00	0.33	0.33	0.33	1.00	1.00	1.00
Upstream Filter(I)	1.00	1.00	1.00	1.00	0.00	1.00	0.63	0.63	0.63	1.00	1.00	1.00
Uniform Delay (d), s/veh	31.2	21.2	20.8	34.4	0.0	28.6	34.3	24.9	16.9	32.0	14.3	14.3
Incr Delay (d2), s/veh	46.7	0.2	0.1	21.6	0.0	6.3	12.3	1.4	0.1	32.4	5.3	5.4
Initial Q Delay(d3),s/veh	0.0	0.0	0.0	0.0	0.0	0.0	0.0	0.0	0.0	0.0	0.0	0.0
%ile BackOfQ(50%),veh/ln	5.0	1.1	0.5	0.3	0.0	3.6	1.0	9.6	0.4	2.8	8.1	8.1
Unsig. Movement Delay, s/veh												
LnGrp Delay(d),s/veh	77.9	21.4	20.9	56.0	0.0	34.9	46.7	26.3	17.0	64.5	19.6	19.8
LnGrp LOS	E	C	C	E	A	C	D	C	B	E	B	B
Approach Vol, veh/h		289			215			1143			1350	
Approach Delay, s/veh		53.6			36.1			27.0			23.1	
Approach LOS		D			D			C			C	

Timer - Assigned Phs	1	2	3	4	5	6	7	8
Phs Duration (G+Y+Rc), s	9.0	35.4	4.8	20.8	6.4	38.0	11.0	14.6
Change Period (Y+Rc), s	4.0	4.0	4.0	4.0	4.0	4.0	4.0	4.0
Max Green Setting (Gmax), s	5.0	26.0	4.0	19.0	4.0	27.0	7.0	16.0
Max Q Clear Time (g_c+I1), s	6.0	21.9	2.5	4.5	3.9	21.7	8.4	10.1
Green Ext Time (p_c), s	0.0	2.6	0.0	0.4	0.0	3.5	0.0	0.5

Intersection Summary	
HCM 6th Ctrl Delay	28.5
HCM 6th LOS	C

Intersection	
Int Delay, s/veh	4.3

Movement	EBL	EBT	EBR	WBL	WBT	WBR	NBL	NBT	NBR	SBL	SBT	SBR
Lane Configurations												
Traffic Vol, veh/h	4	8	9	69	14	20	9	117	88	8	85	8
Future Vol, veh/h	4	8	9	69	14	20	9	117	88	8	85	8
Conflicting Peds, #/hr	0	0	0	0	0	0	0	0	0	0	0	0
Sign Control	Stop	Stop	Stop	Stop	Stop	Stop	Free	Free	Free	Free	Free	Free
RT Channelized	-	-	None	-	-	None	-	-	None	-	-	None
Storage Length	-	-	-	-	-	-	-	-	-	-	-	-
Veh in Median Storage, #	-	0	-	-	0	-	-	0	-	-	0	-
Grade, %	-	0	-	-	0	-	-	0	-	-	0	-
Peak Hour Factor	33	40	56	69	88	83	45	61	78	67	64	50
Heavy Vehicles, %	2	2	2	2	2	2	2	2	2	2	2	2
Mvmt Flow	12	20	16	100	16	24	20	192	113	12	133	16

Major/Minor	Minor2			Minor1			Major1			Major2		
Conflicting Flow All	474	510	141	472	462	249	149	0	0	305	0	0
Stage 1	165	165	-	289	289	-	-	-	-	-	-	-
Stage 2	309	345	-	183	173	-	-	-	-	-	-	-
Critical Hdwy	7.12	6.52	6.22	7.12	6.52	6.22	4.12	-	-	4.12	-	-
Critical Hdwy Stg 1	6.12	5.52	-	6.12	5.52	-	-	-	-	-	-	-
Critical Hdwy Stg 2	6.12	5.52	-	6.12	5.52	-	-	-	-	-	-	-
Follow-up Hdwy	3.518	4.018	3.318	3.518	4.018	3.318	2.218	-	-	2.218	-	-
Pot Cap-1 Maneuver	501	467	907	502	497	790	1432	-	-	1256	-	-
Stage 1	837	762	-	719	673	-	-	-	-	-	-	-
Stage 2	701	636	-	819	756	-	-	-	-	-	-	-
Platoon blocked, %								-	-		-	-
Mov Cap-1 Maneuver	464	454	907	467	484	790	1432	-	-	1256	-	-
Mov Cap-2 Maneuver	464	454	-	467	484	-	-	-	-	-	-	-
Stage 1	823	754	-	707	662	-	-	-	-	-	-	-
Stage 2	652	625	-	775	748	-	-	-	-	-	-	-

Approach	EB	WB	NB	SB
HCM Control Delay, s	12.2	14.8	0.5	0.6
HCM LOS	B	B		

Minor Lane/Major Mvmt	NBL	NBT	NBR	EBLn1	WBLn1	SBL	SBT	SBR
Capacity (veh/h)	1432	-	-	548	505	1256	-	-
HCM Lane V/C Ratio	0.014	-	-	0.088	0.277	0.01	-	-
HCM Control Delay (s)	7.5	0	-	12.2	14.8	7.9	0	-
HCM Lane LOS	A	A	-	B	B	A	A	-
HCM 95th %tile Q(veh)	0	-	-	0.3	1.1	0	-	-

Intersection	
Int Delay, s/veh	3

Movement	EBL	EBT	WBT	WBR	SBL	SBR
Lane Configurations						
Traffic Vol, veh/h	24	80	90	67	33	18
Future Vol, veh/h	24	80	90	67	33	18
Conflicting Peds, #/hr	0	0	0	0	0	0
Sign Control	Free	Free	Free	Free	Stop	Stop
RT Channelized	-	None	-	None	-	None
Storage Length	-	-	-	-	0	-
Veh in Median Storage, #	-	0	0	-	0	-
Grade, %	-	0	0	-	0	-
Peak Hour Factor	44	73	82	70	55	75
Heavy Vehicles, %	2	2	2	2	2	2
Mvmt Flow	55	110	110	96	60	24

Major/Minor	Major1		Major2		Minor2	
Conflicting Flow All	206	0	-	0	378	158
Stage 1	-	-	-	-	158	-
Stage 2	-	-	-	-	220	-
Critical Hdwy	4.12	-	-	-	6.42	6.22
Critical Hdwy Stg 1	-	-	-	-	5.42	-
Critical Hdwy Stg 2	-	-	-	-	5.42	-
Follow-up Hdwy	2.218	-	-	-	3.518	3.318
Pot Cap-1 Maneuver	1365	-	-	-	624	887
Stage 1	-	-	-	-	871	-
Stage 2	-	-	-	-	817	-
Platoon blocked, %		-	-	-		
Mov Cap-1 Maneuver	1365	-	-	-	597	887
Mov Cap-2 Maneuver	-	-	-	-	597	-
Stage 1	-	-	-	-	834	-
Stage 2	-	-	-	-	817	-

Approach	EB	WB	SB
HCM Control Delay, s	2.6	0	11.3
HCM LOS			B

Minor Lane/Major Mvmt	EBL	EBT	WBT	WBR	SBLn1
Capacity (veh/h)	1365	-	-	-	659
HCM Lane V/C Ratio	0.04	-	-	-	0.127
HCM Control Delay (s)	7.7	0	-	-	11.3
HCM Lane LOS	A	A	-	-	B
HCM 95th %tile Q(veh)	0.1	-	-	-	0.4

Intersection	
Int Delay, s/veh	5.2

Movement	EBL	EBT	EBR	WBL	WBT	WBR	NBL	NBT	NBR	SBL	SBT	SBR
Lane Configurations												
Traffic Vol, veh/h	11	99	2	88	143	23	3	5	71	32	3	10
Future Vol, veh/h	11	99	2	88	143	23	3	5	71	32	3	10
Conflicting Peds, #/hr	0	0	0	0	0	0	0	0	0	0	0	0
Sign Control	Free	Free	Free	Free	Free	Free	Stop	Stop	Stop	Stop	Stop	Stop
RT Channelized	-	-	None	-	-	None	-	-	None	-	-	None
Storage Length	55	-	-	75	-	0	-	-	-	-	-	-
Veh in Median Storage, #	-	0	-	-	0	-	-	0	-	-	0	-
Grade, %	-	0	-	-	0	-	-	0	-	-	0	-
Peak Hour Factor	50	74	50	85	83	82	75	42	63	80	38	38
Heavy Vehicles, %	2	2	2	2	2	2	2	2	2	2	2	2
Mvmt Flow	22	134	4	104	172	28	4	12	113	40	8	26

Major/Minor	Major1			Major2			Minor1			Minor2		
Conflicting Flow All	200	0	0	138	0	0	591	588	136	623	562	172
Stage 1	-	-	-	-	-	-	180	180	-	380	380	-
Stage 2	-	-	-	-	-	-	411	408	-	243	182	-
Critical Hdwy	4.12	-	-	4.12	-	-	7.12	6.52	6.22	7.12	6.52	6.22
Critical Hdwy Stg 1	-	-	-	-	-	-	6.12	5.52	-	6.12	5.52	-
Critical Hdwy Stg 2	-	-	-	-	-	-	6.12	5.52	-	6.12	5.52	-
Follow-up Hdwy	2.218	-	-	2.218	-	-	3.518	4.018	3.318	3.518	4.018	3.318
Pot Cap-1 Maneuver	1372	-	-	1446	-	-	419	421	913	398	436	872
Stage 1	-	-	-	-	-	-	822	750	-	642	614	-
Stage 2	-	-	-	-	-	-	618	597	-	761	749	-
Platoon blocked, %		-	-		-	-						
Mov Cap-1 Maneuver	1372	-	-	1446	-	-	374	384	913	318	398	872
Mov Cap-2 Maneuver	-	-	-	-	-	-	374	384	-	318	398	-
Stage 1	-	-	-	-	-	-	809	738	-	632	570	-
Stage 2	-	-	-	-	-	-	549	554	-	646	737	-

Approach	EB	WB	NB	SB
HCM Control Delay, s	1.1	2.6	10.5	15.3
HCM LOS			B	C

Minor Lane/Major Mvmt	NBLn1	EBL	EBT	EBR	WBL	WBT	WBR	SBLn1
Capacity (veh/h)	779	1372	-	-	1446	-	-	422
HCM Lane V/C Ratio	0.165	0.016	-	-	0.072	-	-	0.176
HCM Control Delay (s)	10.5	7.7	-	-	7.7	-	-	15.3
HCM Lane LOS	B	A	-	-	A	-	-	C
HCM 95th %tile Q(veh)	0.6	0	-	-	0.2	-	-	0.6

Movement	EBL	EBT	EBR	WBL	WBT	WBR	NBL	NBT	NBR	SBL	SBT	SBR
Lane Configurations												
Traffic Volume (veh/h)	73	94	41	34	99	183	61	790	57	203	694	98
Future Volume (veh/h)	73	94	41	34	99	183	61	790	57	203	694	98
Initial Q (Qb), veh	0	0	0	0	0	0	0	0	0	0	0	0
Ped-Bike Adj(A_pbT)	1.00		1.00	1.00		1.00	1.00		1.00	1.00		1.00
Parking Bus, Adj	1.00	1.00	1.00	1.00	1.00	1.00	1.00	1.00	1.00	1.00	1.00	1.00
Work Zone On Approach		No			No			No			No	
Adj Sat Flow, veh/h/ln	1870	1870	1870	1870	1870	1870	1870	1870	1870	1870	1870	1870
Adj Flow Rate, veh/h	112	112	52	48	112	203	72	952	72	257	754	108
Peak Hour Factor	0.65	0.84	0.79	0.71	0.88	0.90	0.85	0.83	0.79	0.79	0.92	0.91
Percent Heavy Veh, %	2	2	2	2	2	2	2	2	2	2	2	2
Cap, veh/h	194	481	408	359	153	278	92	1358	103	295	1846	824
Arrive On Green	0.26	0.26	0.26	0.26	0.26	0.26	0.05	0.41	0.41	0.33	1.00	1.00
Sat Flow, veh/h	1065	1870	1585	1222	596	1080	1781	3348	253	1781	3554	1585
Grp Volume(v), veh/h	112	112	52	48	0	315	72	505	519	257	754	108
Grp Sat Flow(s),veh/h/ln	1065	1870	1585	1222	0	1676	1781	1777	1825	1781	1777	1585
Q Serve(g_s), s	6.0	3.3	1.8	2.3	0.0	12.0	2.8	16.5	16.5	9.5	0.0	0.0
Cycle Q Clear(g_c), s	18.0	3.3	1.8	5.6	0.0	12.0	2.8	16.5	16.5	9.5	0.0	0.0
Prop In Lane	1.00		1.00	1.00		0.64	1.00		0.14	1.00		1.00
Lane Grp Cap(c), veh/h	194	481	408	359	0	431	92	721	740	295	1846	824
V/C Ratio(X)	0.58	0.23	0.13	0.13	0.00	0.73	0.78	0.70	0.70	0.87	0.41	0.13
Avail Cap(c_a), veh/h	194	481	408	359	0	431	178	721	740	356	1846	824
HCM Platoon Ratio	1.00	1.00	1.00	1.00	1.00	1.00	1.00	1.00	1.00	2.00	2.00	2.00
Upstream Filter(I)	1.00	1.00	1.00	1.00	0.00	1.00	1.00	1.00	1.00	0.65	0.65	0.65
Uniform Delay (d), s/veh	32.6	20.5	20.0	22.7	0.0	23.8	32.8	17.3	17.3	22.7	0.0	0.0
Incr Delay (d2), s/veh	4.2	0.2	0.1	0.2	0.0	6.2	13.1	5.6	5.5	12.4	0.4	0.2
Initial Q Delay(d3),s/veh	0.0	0.0	0.0	0.0	0.0	0.0	0.0	0.0	0.0	0.0	0.0	0.0
%ile BackOfQ(50%),veh/ln	2.1	1.4	0.6	0.6	0.0	5.2	1.5	7.3	7.4	4.1	0.1	0.0
Unsig. Movement Delay, s/veh												
LnGrp Delay(d),s/veh	36.8	20.8	20.1	22.9	0.0	30.0	45.9	22.9	22.7	35.1	0.4	0.2
LnGrp LOS	D	C	C	C	A	C	D	C	C	D	A	A
Approach Vol, veh/h		276			363			1096			1119	
Approach Delay, s/veh		27.2			29.1			24.3			8.4	
Approach LOS		C			C			C			A	

Timer - Assigned Phs	1	2		4	5	6		8
Phs Duration (G+Y+Rc), s	15.6	32.4		22.0	7.6	40.4		22.0
Change Period (Y+Rc), s	4.0	4.0		4.0	4.0	4.0		4.0
Max Green Setting (Gmax), s	14.0	26.0		18.0	7.0	33.0		18.0
Max Q Clear Time (g_c+I1), s	11.5	18.5		20.0	4.8	2.0		14.0
Green Ext Time (p_c), s	0.2	3.8		0.0	0.0	6.4		0.8

Intersection Summary			
HCM 6th Ctrl Delay			19.0
HCM 6th LOS			B

Intersection	
Int Delay, s/veh	0.6

Movement	EBL	EBR	NBL	NBT	SBT	SBR
Lane Configurations						
Traffic Vol, veh/h	9	0	1	146	95	15
Future Vol, veh/h	9	0	1	146	95	15
Conflicting Peds, #/hr	0	0	0	0	0	0
Sign Control	Stop	Stop	Free	Free	Free	Free
RT Channelized	-	None	-	None	-	None
Storage Length	0	-	0	-	-	-
Veh in Median Storage, #	0	-	-	0	0	-
Grade, %	0	-	-	0	0	-
Peak Hour Factor	56	25	25	76	75	54
Heavy Vehicles, %	2	2	2	2	2	2
Mvmt Flow	16	0	4	192	127	28

Major/Minor	Minor2		Major1		Major2	
Conflicting Flow All	341	141	155	0	-	0
Stage 1	141	-	-	-	-	-
Stage 2	200	-	-	-	-	-
Critical Hdwy	6.42	6.22	4.12	-	-	-
Critical Hdwy Stg 1	5.42	-	-	-	-	-
Critical Hdwy Stg 2	5.42	-	-	-	-	-
Follow-up Hdwy	3.518	3.318	2.218	-	-	-
Pot Cap-1 Maneuver	655	907	1425	-	-	-
Stage 1	886	-	-	-	-	-
Stage 2	834	-	-	-	-	-
Platoon blocked, %				-	-	-
Mov Cap-1 Maneuver	653	907	1425	-	-	-
Mov Cap-2 Maneuver	653	-	-	-	-	-
Stage 1	883	-	-	-	-	-
Stage 2	834	-	-	-	-	-

Approach	EB	NB	SB
HCM Control Delay, s	10.7	0.2	0
HCM LOS	B		

Minor Lane/Major Mvmt	NBL	NBT	EBLn1	SBT	SBR
Capacity (veh/h)	1425	-	653	-	-
HCM Lane V/C Ratio	0.003	-	0.025	-	-
HCM Control Delay (s)	7.5	-	10.7	-	-
HCM Lane LOS	A	-	B	-	-
HCM 95th %tile Q(veh)	0	-	0.1	-	-

Intersection	
Int Delay, s/veh	0.1

Movement	EBL	EBT	EBR	WBL	WBT	WBR	NBL	NBT	NBR	SBL	SBT	SBR
Lane Configurations												
Traffic Vol, veh/h	1	0	0	11	0	31	0	93	11	38	84	0
Future Vol, veh/h	1	0	0	11	0	31	0	93	11	38	84	0
Conflicting Peds, #/hr	0	0	0	0	0	0	0	0	0	0	0	0
Sign Control	Free	Free	Free	Free	Free	Free	Stop	Stop	Stop	Stop	Stop	Stop
RT Channelized	-	-	None	-	-	None	-	-	None	-	-	None
Storage Length	-	-	-	-	-	-	-	-	-	-	-	-
Veh in Median Storage, #	-	0	-	-	0	-	-	0	-	-	0	-
Grade, %	-	0	-	-	0	-	-	0	-	-	0	-
Peak Hour Factor	25	25	25	55	25	25	25	81	55	50	76	25
Heavy Vehicles, %	2	2	2	2	2	2	2	2	2	2	2	2
Mvmt Flow	4	0	0	20	0	124	0	115	20	76	111	0

Major/Minor	Major1			Major2			Minor1			Minor2		
Conflicting Flow All	124	0	0	0	0	0	166	172	0	178	110	62
Stage 1	-	-	-	-	-	-	8	8	-	102	102	-
Stage 2	-	-	-	-	-	-	158	164	-	76	8	-
Critical Hdwy	4.12	-	-	4.12	-	-	7.12	6.52	6.22	7.12	6.52	6.22
Critical Hdwy Stg 1	-	-	-	-	-	-	6.12	5.52	-	6.12	5.52	-
Critical Hdwy Stg 2	-	-	-	-	-	-	6.12	5.52	-	6.12	5.52	-
Follow-up Hdwy	2.218	-	-	2.218	-	-	3.518	4.018	3.318	3.518	4.018	3.318
Pot Cap-1 Maneuver	1463	-	-	-	-	-	798	721	-	784	780	1003
Stage 1	-	-	-	-	-	-	1013	889	-	904	811	-
Stage 2	-	-	-	-	-	-	844	762	-	933	889	-
Platoon blocked, %		-	-		-	-						
Mov Cap-1 Maneuver	1463	-	-	-	-	-	709	719	-	-	778	1003
Mov Cap-2 Maneuver	-	-	-	-	-	-	709	719	-	-	778	-
Stage 1	-	-	-	-	-	-	1010	886	-	901	811	-
Stage 2	-	-	-	-	-	-	729	762	-	810	886	-

Approach	EB	WB	NB	SB
HCM Control Delay, s	7.5			
HCM LOS			-	-

Minor Lane/Major Mvmt	NBLn1	EBL	EBT	EBR	WBL	WBT	WBR	SBLn1
Capacity (veh/h)	-	1463	-	-	-	-	-	-
HCM Lane V/C Ratio	-	0.003	-	-	-	-	-	-
HCM Control Delay (s)	-	7.5	0	-	-	-	-	-
HCM Lane LOS	-	A	A	-	-	-	-	-
HCM 95th %tile Q(veh)	-	0	-	-	-	-	-	-

Intersection	
Int Delay, s/veh	4.7

Movement	WBL	WBR	NBT	NBR	SBL	SBT
Lane Configurations						
Traffic Vol, veh/h	34	94	117	29	80	61
Future Vol, veh/h	34	94	117	29	80	61
Conflicting Peds, #/hr	0	0	0	0	0	0
Sign Control	Stop	Stop	Free	Free	Free	Free
RT Channelized	-	None	-	None	-	None
Storage Length	0	-	-	-	0	-
Veh in Median Storage, #	0	-	0	-	-	0
Grade, %	0	-	0	-	-	0
Peak Hour Factor	92	92	92	92	92	92
Heavy Vehicles, %	2	2	2	2	2	2
Mvmt Flow	37	102	127	32	87	66

Major/Minor	Minor1		Major1		Major2	
Conflicting Flow All	383	143	0	0	159	0
Stage 1	143	-	-	-	-	-
Stage 2	240	-	-	-	-	-
Critical Hdwy	6.42	6.22	-	-	4.12	-
Critical Hdwy Stg 1	5.42	-	-	-	-	-
Critical Hdwy Stg 2	5.42	-	-	-	-	-
Follow-up Hdwy	3.518	3.318	-	-	2.218	-
Pot Cap-1 Maneuver	620	905	-	-	1420	-
Stage 1	884	-	-	-	-	-
Stage 2	800	-	-	-	-	-
Platoon blocked, %			-	-		-
Mov Cap-1 Maneuver	582	905	-	-	1420	-
Mov Cap-2 Maneuver	582	-	-	-	-	-
Stage 1	884	-	-	-	-	-
Stage 2	751	-	-	-	-	-

Approach	WB	NB	SB
HCM Control Delay, s	10.5	0	4.4
HCM LOS	B		

Minor Lane/Major Mvmt	NBT	NBR	WBLn1	SBL	SBT
Capacity (veh/h)	-	-	789	1420	-
HCM Lane V/C Ratio	-	-	0.176	0.061	-
HCM Control Delay (s)	-	-	10.5	7.7	-
HCM Lane LOS	-	-	B	A	-
HCM 95th %tile Q(veh)	-	-	0.6	0.2	-

Intersection	
Int Delay, s/veh	2.1

Movement	WBL	WBR	NBT	NBR	SBL	SBT
Lane Configurations						
Traffic Vol, veh/h	17	26	120	15	22	73
Future Vol, veh/h	17	26	120	15	22	73
Conflicting Peds, #/hr	0	0	0	0	0	0
Sign Control	Stop	Stop	Free	Free	Free	Free
RT Channelized	-	None	-	None	-	None
Storage Length	0	-	-	-	-	-
Veh in Median Storage, #	0	-	0	-	-	0
Grade, %	0	-	0	-	-	0
Peak Hour Factor	92	92	92	92	92	92
Heavy Vehicles, %	2	2	2	2	2	2
Mvmt Flow	18	28	130	16	24	79

Major/Minor	Minor1		Major1		Major2	
Conflicting Flow All	265	138	0	0	146	0
Stage 1	138	-	-	-	-	-
Stage 2	127	-	-	-	-	-
Critical Hdwy	6.42	6.22	-	-	4.12	-
Critical Hdwy Stg 1	5.42	-	-	-	-	-
Critical Hdwy Stg 2	5.42	-	-	-	-	-
Follow-up Hdwy	3.518	3.318	-	-	2.218	-
Pot Cap-1 Maneuver	724	910	-	-	1436	-
Stage 1	889	-	-	-	-	-
Stage 2	899	-	-	-	-	-
Platoon blocked, %			-	-		-
Mov Cap-1 Maneuver	712	910	-	-	1436	-
Mov Cap-2 Maneuver	712	-	-	-	-	-
Stage 1	889	-	-	-	-	-
Stage 2	884	-	-	-	-	-

Approach	WB	NB	SB
HCM Control Delay, s	9.7	0	1.7
HCM LOS	A		

Minor Lane/Major Mvmt	NBT	NBR	WBLn1	SBL	SBT
Capacity (veh/h)	-	-	820	1436	-
HCM Lane V/C Ratio	-	-	0.057	0.017	-
HCM Control Delay (s)	-	-	9.7	7.5	0
HCM Lane LOS	-	-	A	A	A
HCM 95th %tile Q(veh)	-	-	0.2	0.1	-

HCM 6th Signalized Intersection Summary
1: US-395 & Dos Palmas Rd.

07/18/2019

Movement	EBL	EBT	EBR	WBL	WBT	WBR	NBL	NBT	NBR	SBL	SBT	SBR
Lane Configurations												
Traffic Volume (veh/h)	296	111	104	49	50	250	37	1337	25	151	1170	160
Future Volume (veh/h)	296	111	104	49	50	250	37	1337	25	151	1170	160
Initial Q (Qb), veh	0	0	0	0	0	0	0	0	0	0	0	0
Ped-Bike Adj(A_pbT)	1.00		1.00	1.00		1.00	1.00		1.00	1.00		1.00
Parking Bus, Adj	1.00	1.00	1.00	1.00	1.00	1.00	1.00	1.00	1.00	1.00	1.00	1.00
Work Zone On Approach		No			No			No			No	
Adj Sat Flow, veh/h/ln	1870	1870	1870	1870	1870	1870	1870	1870	1870	1870	1870	1870
Adj Flow Rate, veh/h	329	123	116	54	56	278	41	1486	28	168	1300	178
Peak Hour Factor	0.90	0.90	0.90	0.90	0.90	0.90	0.90	0.90	0.90	0.90	0.90	0.90
Percent Heavy Veh, %	2	2	2	2	2	2	2	2	2	2	2	2
Cap, veh/h	341	535	453	70	36	181	52	1570	700	178	1610	219
Arrive On Green	0.19	0.29	0.29	0.04	0.13	0.13	0.03	0.44	0.44	0.10	0.51	0.51
Sat Flow, veh/h	1781	1870	1585	1781	273	1354	1781	3554	1585	1781	3143	428
Grp Volume(v), veh/h	329	123	116	54	0	334	41	1486	28	168	731	747
Grp Sat Flow(s),veh/h/ln	1781	1870	1585	1781	0	1627	1781	1777	1585	1781	1777	1793
Q Serve(g_s), s	22.0	6.0	6.8	3.6	0.0	16.0	2.7	48.2	1.2	11.2	41.0	41.7
Cycle Q Clear(g_c), s	22.0	6.0	6.8	3.6	0.0	16.0	2.7	48.2	1.2	11.2	41.0	41.7
Prop In Lane	1.00		1.00	1.00		0.83	1.00		1.00	1.00		0.24
Lane Grp Cap(c), veh/h	341	535	453	70	0	217	52	1570	700	178	910	919
V/C Ratio(X)	0.96	0.23	0.26	0.77	0.00	1.54	0.78	0.95	0.04	0.94	0.80	0.81
Avail Cap(c_a), veh/h	341	535	453	134	0	217	74	1570	700	178	910	919
HCM Platoon Ratio	1.00	1.00	1.00	1.00	1.00	1.00	1.00	1.00	1.00	1.00	1.00	1.00
Upstream Filter(I)	1.00	1.00	1.00	1.00	0.00	1.00	0.24	0.24	0.24	1.00	1.00	1.00
Uniform Delay (d), s/veh	48.1	32.8	33.0	57.1	0.0	52.0	57.8	32.1	19.0	53.7	24.3	24.5
Incr Delay (d2), s/veh	39.0	0.2	0.3	16.5	0.0	264.7	8.1	4.2	0.0	51.0	7.5	7.8
Initial Q Delay(d3),s/veh	0.0	0.0	0.0	0.0	0.0	0.0	0.0	0.0	0.0	0.0	0.0	0.0
%ile BackOfQ(50%),veh/ln	13.4	2.8	2.7	1.9	0.0	22.5	1.4	21.0	0.5	7.5	18.5	19.1
Unsig. Movement Delay, s/veh												
LnGrp Delay(d),s/veh	87.1	33.0	33.3	73.6	0.0	316.7	66.0	36.3	19.1	104.7	31.7	32.2
LnGrp LOS	F	C	C	E	A	F	E	D	B	F	C	C
Approach Vol, veh/h		568			388			1555			1646	
Approach Delay, s/veh		64.4			282.9			36.8			39.4	
Approach LOS		E			F			D			D	

Timer - Assigned Phs	1	2	3	4	5	6	7	8
Phs Duration (G+Y+Rc), s	16.0	57.0	8.7	38.3	7.5	65.5	27.0	20.0
Change Period (Y+Rc), s	4.0	4.0	4.0	4.0	4.0	4.0	4.0	4.0
Max Green Setting (Gmax), s	12.0	53.0	9.0	30.0	5.0	60.0	23.0	16.0
Max Q Clear Time (g_c+I1), s	13.2	50.2	5.6	8.8	4.7	43.7	24.0	18.0
Green Ext Time (p_c), s	0.0	2.3	0.0	1.0	0.0	9.6	0.0	0.0

Intersection Summary	
HCM 6th Ctrl Delay	64.6
HCM 6th LOS	E

Intersection	
Int Delay, s/veh	7.3

Movement	EBL	EBT	EBR	WBL	WBT	WBR	NBL	NBT	NBR	SBL	SBT	SBR
Lane Configurations												
Traffic Vol, veh/h	7	163	4	26	61	13	8	97	89	26	106	8
Future Vol, veh/h	7	163	4	26	61	13	8	97	89	26	106	8
Conflicting Peds, #/hr	0	0	0	0	0	0	0	0	0	0	0	0
Sign Control	Stop	Stop	Stop	Stop	Stop	Stop	Free	Free	Free	Free	Free	Free
RT Channelized	-	-	None	-	-	None	-	-	None	-	-	None
Storage Length	-	-	-	-	-	-	-	-	-	-	-	-
Veh in Median Storage, #	-	0	-	-	0	-	-	0	-	-	0	-
Grade, %	-	0	-	-	0	-	-	0	-	-	0	-
Peak Hour Factor	90	90	90	90	90	90	90	90	90	90	90	90
Heavy Vehicles, %	2	2	2	2	2	2	2	2	2	2	2	2
Mvmt Flow	8	181	4	29	68	14	9	108	99	29	118	9

Major/Minor	Minor2			Minor1			Major1			Major2		
Conflicting Flow All	398	406	123	449	361	158	127	0	0	207	0	0
Stage 1	181	181	-	176	176	-	-	-	-	-	-	-
Stage 2	217	225	-	273	185	-	-	-	-	-	-	-
Critical Hdwy	7.12	6.52	6.22	7.12	6.52	6.22	4.12	-	-	4.12	-	-
Critical Hdwy Stg 1	6.12	5.52	-	6.12	5.52	-	-	-	-	-	-	-
Critical Hdwy Stg 2	6.12	5.52	-	6.12	5.52	-	-	-	-	-	-	-
Follow-up Hdwy	3.518	4.018	3.318	3.518	4.018	3.318	2.218	-	-	2.218	-	-
Pot Cap-1 Maneuver	562	534	928	520	566	887	1459	-	-	1364	-	-
Stage 1	821	750	-	826	753	-	-	-	-	-	-	-
Stage 2	785	718	-	733	747	-	-	-	-	-	-	-
Platoon blocked, %								-	-		-	-
Mov Cap-1 Maneuver	490	518	928	369	549	887	1459	-	-	1364	-	-
Mov Cap-2 Maneuver	490	518	-	369	549	-	-	-	-	-	-	-
Stage 1	815	733	-	820	748	-	-	-	-	-	-	-
Stage 2	697	713	-	537	730	-	-	-	-	-	-	-

Approach	EB	WB	NB	SB
HCM Control Delay, s	15.9	14	0.3	1.4
HCM LOS	C	B		

Minor Lane/Major Mvmt	NBL	NBT	NBR	EBLn1	WBLn1	SBL	SBT	SBR
Capacity (veh/h)	1459	-	-	522	510	1364	-	-
HCM Lane V/C Ratio	0.006	-	-	0.37	0.218	0.021	-	-
HCM Control Delay (s)	7.5	0	-	15.9	14	7.7	0	-
HCM Lane LOS	A	A	-	C	B	A	A	-
HCM 95th %tile Q(veh)	0	-	-	1.7	0.8	0.1	-	-

Intersection	
Int Delay, s/veh	2.4

Movement	EBL	EBT	WBT	WBR	SBL	SBR
Lane Configurations						
Traffic Vol, veh/h	73	230	90	208	62	5
Future Vol, veh/h	73	230	90	208	62	5
Conflicting Peds, #/hr	0	0	0	0	0	0
Sign Control	Free	Free	Free	Free	Stop	Stop
RT Channelized	-	None	-	None	-	None
Storage Length	-	-	-	-	0	-
Veh in Median Storage, #	-	0	0	-	0	-
Grade, %	-	0	0	-	0	-
Peak Hour Factor	90	90	90	90	90	90
Heavy Vehicles, %	2	2	2	2	2	2
Mvmt Flow	81	256	100	231	69	6

Major/Minor	Major1		Major2		Minor2	
Conflicting Flow All	331	0	-	0	634	216
Stage 1	-	-	-	-	216	-
Stage 2	-	-	-	-	418	-
Critical Hdwy	4.12	-	-	-	6.42	6.22
Critical Hdwy Stg 1	-	-	-	-	5.42	-
Critical Hdwy Stg 2	-	-	-	-	5.42	-
Follow-up Hdwy	2.218	-	-	-	3.518	3.318
Pot Cap-1 Maneuver	1228	-	-	-	443	824
Stage 1	-	-	-	-	820	-
Stage 2	-	-	-	-	664	-
Platoon blocked, %		-	-	-		
Mov Cap-1 Maneuver	1228	-	-	-	409	824
Mov Cap-2 Maneuver	-	-	-	-	409	-
Stage 1	-	-	-	-	757	-
Stage 2	-	-	-	-	664	-

Approach	EB	WB	SB
HCM Control Delay, s	2	0	15.3
HCM LOS			C

Minor Lane/Major Mvmt	EBL	EBT	WBT	WBR	SBLn1
Capacity (veh/h)	1228	-	-	-	425
HCM Lane V/C Ratio	0.066	-	-	-	0.175
HCM Control Delay (s)	8.1	0	-	-	15.3
HCM Lane LOS	A	A	-	-	C
HCM 95th %tile Q(veh)	0.2	-	-	-	0.6

Intersection	
Int Delay, s/veh	9.2

Movement	EBL	EBT	EBR	WBL	WBT	WBR	NBL	NBT	NBR	SBL	SBT	SBR
Lane Configurations												
Traffic Vol, veh/h	10	279	5	66	209	16	47	8	110	65	60	37
Future Vol, veh/h	10	279	5	66	209	16	47	8	110	65	60	37
Conflicting Peds, #/hr	0	0	0	0	0	0	0	0	0	0	0	0
Sign Control	Free	Free	Free	Free	Free	Free	Stop	Stop	Stop	Stop	Stop	Stop
RT Channelized	-	-	None	-	-	None	-	-	None	-	-	None
Storage Length	55	-	-	75	-	0	-	-	-	-	-	-
Veh in Median Storage, #	-	0	-	-	0	-	-	0	-	-	0	-
Grade, %	-	0	-	-	0	-	-	0	-	-	0	-
Peak Hour Factor	90	90	90	90	90	90	90	90	90	90	90	90
Heavy Vehicles, %	2	2	2	2	2	2	2	2	2	2	2	2
Mvmt Flow	11	310	6	73	232	18	52	9	122	72	67	41

Major/Minor	Major1			Major2			Minor1			Minor2		
Conflicting Flow All	250	0	0	316	0	0	776	731	313	779	716	232
Stage 1	-	-	-	-	-	-	335	335	-	378	378	-
Stage 2	-	-	-	-	-	-	441	396	-	401	338	-
Critical Hdwy	4.12	-	-	4.12	-	-	7.12	6.52	6.22	7.12	6.52	6.22
Critical Hdwy Stg 1	-	-	-	-	-	-	6.12	5.52	-	6.12	5.52	-
Critical Hdwy Stg 2	-	-	-	-	-	-	6.12	5.52	-	6.12	5.52	-
Follow-up Hdwy	2.218	-	-	2.218	-	-	3.518	4.018	3.318	3.518	4.018	3.318
Pot Cap-1 Maneuver	1316	-	-	1244	-	-	315	349	727	313	356	807
Stage 1	-	-	-	-	-	-	679	643	-	644	615	-
Stage 2	-	-	-	-	-	-	595	604	-	626	641	-
Platoon blocked, %		-	-		-	-						
Mov Cap-1 Maneuver	1316	-	-	1244	-	-	240	326	727	242	332	807
Mov Cap-2 Maneuver	-	-	-	-	-	-	240	326	-	242	332	-
Stage 1	-	-	-	-	-	-	674	638	-	639	579	-
Stage 2	-	-	-	-	-	-	470	568	-	509	636	-

Approach	EB	WB	NB	SB
HCM Control Delay, s	0.3	1.8	18.7	28.7
HCM LOS			C	D

Minor Lane/Major Mvmt	NBLn1	EBL	EBT	EBR	WBL	WBT	WBR	SBLn1
Capacity (veh/h)	444	1316	-	-	1244	-	-	327
HCM Lane V/C Ratio	0.413	0.008	-	-	0.059	-	-	0.55
HCM Control Delay (s)	18.7	7.8	-	-	8.1	-	-	28.7
HCM Lane LOS	C	A	-	-	A	-	-	D
HCM 95th %tile Q(veh)	2	0	-	-	0.2	-	-	3.1

Movement	EBL	EBT	EBR	WBL	WBT	WBR	NBL	NBT	NBR	SBL	SBT	SBR
Lane Configurations												
Traffic Volume (veh/h)	140	187	131	97	131	255	61	998	53	247	971	111
Future Volume (veh/h)	140	187	131	97	131	255	61	998	53	247	971	111
Initial Q (Qb), veh	0	0	0	0	0	0	0	0	0	0	0	0
Ped-Bike Adj(A_pbT)	1.00		1.00	1.00		1.00	1.00		1.00	1.00		1.00
Parking Bus, Adj	1.00	1.00	1.00	1.00	1.00	1.00	1.00	1.00	1.00	1.00	1.00	1.00
Work Zone On Approach		No			No			No			No	
Adj Sat Flow, veh/h/ln	1870	1870	1870	1870	1870	1870	1870	1870	1870	1870	1870	1870
Adj Flow Rate, veh/h	156	208	146	108	146	283	68	1109	59	274	1079	123
Peak Hour Factor	0.90	0.90	0.90	0.90	0.90	0.90	0.90	0.90	0.90	0.90	0.90	0.90
Percent Heavy Veh, %	2	2	2	2	2	2	2	2	2	2	2	2
Cap, veh/h	194	631	535	352	192	372	87	1201	64	289	1647	735
Arrive On Green	0.34	0.34	0.34	0.34	0.34	0.34	0.05	0.35	0.35	0.16	0.46	0.46
Sat Flow, veh/h	959	1870	1585	1027	569	1103	1781	3432	183	1781	3554	1585
Grp Volume(v), veh/h	156	208	146	108	0	429	68	574	594	274	1079	123
Grp Sat Flow(s),veh/h/ln	959	1870	1585	1027	0	1672	1781	1777	1838	1781	1777	1585
Q Serve(g_s), s	8.7	6.6	5.4	7.0	0.0	18.3	3.0	24.8	24.8	12.2	18.7	3.6
Cycle Q Clear(g_c), s	27.0	6.6	5.4	13.6	0.0	18.3	3.0	24.8	24.8	12.2	18.7	3.6
Prop In Lane	1.00		1.00	1.00		0.66	1.00		0.10	1.00		1.00
Lane Grp Cap(c), veh/h	194	631	535	352	0	564	87	622	643	289	1647	735
V/C Ratio(X)	0.80	0.33	0.27	0.31	0.00	0.76	0.78	0.92	0.92	0.95	0.66	0.17
Avail Cap(c_a), veh/h	194	631	535	352	0	564	134	622	643	289	1647	735
HCM Platoon Ratio	1.00	1.00	1.00	1.00	1.00	1.00	1.00	1.00	1.00	1.00	1.00	1.00
Upstream Filter(I)	1.00	1.00	1.00	1.00	0.00	1.00	1.00	1.00	1.00	0.55	0.55	0.55
Uniform Delay (d), s/veh	37.1	19.8	19.3	24.8	0.0	23.6	37.6	25.0	25.0	33.2	16.5	12.5
Incr Delay (d2), s/veh	21.0	0.3	0.3	0.5	0.0	6.0	14.6	21.4	21.0	26.4	1.1	0.3
Initial Q Delay(d3),s/veh	0.0	0.0	0.0	0.0	0.0	0.0	0.0	0.0	0.0	0.0	0.0	0.0
%ile BackOfQ(50%),veh/ln	4.1	2.8	1.9	1.7	0.0	7.8	1.6	13.5	13.9	7.2	7.3	1.3
Unsig. Movement Delay, s/veh												
LnGrp Delay(d),s/veh	58.1	20.1	19.6	25.3	0.0	29.6	52.2	46.4	46.0	59.6	17.7	12.8
LnGrp LOS	E	C	B	C	A	C	D	D	D	E	B	B
Approach Vol, veh/h		510			537			1236			1476	
Approach Delay, s/veh		31.6			28.7			46.5			25.0	
Approach LOS		C			C			D			C	

Timer - Assigned Phs	1	2		4	5	6		8
Phs Duration (G+Y+Rc), s	17.0	32.0		31.0	7.9	41.1		31.0
Change Period (Y+Rc), s	4.0	4.0		4.0	4.0	4.0		4.0
Max Green Setting (Gmax), s	13.0	28.0		27.0	6.0	35.0		27.0
Max Q Clear Time (g_c+I1), s	14.2	26.8		29.0	5.0	20.7		20.3
Green Ext Time (p_c), s	0.0	0.8		0.0	0.0	7.0		1.9

Intersection Summary		
HCM 6th Ctrl Delay		33.5
HCM 6th LOS		C

Intersection	
Int Delay, s/veh	0.2

Movement	EBL	EBR	NBL	NBT	SBT	SBR
Lane Configurations						
Traffic Vol, veh/h	6	0	0	138	122	4
Future Vol, veh/h	6	0	0	138	122	4
Conflicting Peds, #/hr	0	0	0	0	0	0
Sign Control	Stop	Stop	Free	Free	Free	Free
RT Channelized	-	None	-	None	-	None
Storage Length	0	-	-	-	-	-
Veh in Median Storage, #	0	-	-	0	0	-
Grade, %	0	-	-	0	0	-
Peak Hour Factor	90	90	90	90	90	90
Heavy Vehicles, %	2	2	2	2	2	2
Mvmt Flow	7	0	0	153	136	4

Major/Minor	Minor2		Major1		Major2	
Conflicting Flow All	291	138	140	0	-	0
Stage 1	138	-	-	-	-	-
Stage 2	153	-	-	-	-	-
Critical Hdwy	6.42	6.22	4.12	-	-	-
Critical Hdwy Stg 1	5.42	-	-	-	-	-
Critical Hdwy Stg 2	5.42	-	-	-	-	-
Follow-up Hdwy	3.518	3.318	2.218	-	-	-
Pot Cap-1 Maneuver	700	910	1443	-	-	-
Stage 1	889	-	-	-	-	-
Stage 2	875	-	-	-	-	-
Platoon blocked, %				-	-	-
Mov Cap-1 Maneuver	700	910	1443	-	-	-
Mov Cap-2 Maneuver	700	-	-	-	-	-
Stage 1	889	-	-	-	-	-
Stage 2	875	-	-	-	-	-

Approach	EB	NB	SB
HCM Control Delay, s	10.2	0	0
HCM LOS	B		

Minor Lane/Major Mvmt	NBL	NBT	EBLn1	SBT	SBR
Capacity (veh/h)	1443	-	700	-	-
HCM Lane V/C Ratio	-	-	0.01	-	-
HCM Control Delay (s)	0	-	10.2	-	-
HCM Lane LOS	A	-	B	-	-
HCM 95th %tile Q(veh)	0	-	0	-	-

Intersection	
Int Delay, s/veh	7.3

Movement	EBL	EBT	EBR	WBL	WBT	WBR	NBL	NBT	NBR	SBL	SBT	SBR
Lane Configurations												
Traffic Vol, veh/h	1	132	0	20	44	32	0	120	10	28	118	0
Future Vol, veh/h	1	132	0	20	44	32	0	120	10	28	118	0
Conflicting Peds, #/hr	0	0	0	0	0	0	0	0	0	0	0	0
Sign Control	Free	Free	Free	Free	Free	Free	Stop	Stop	Stop	Stop	Stop	Stop
RT Channelized	-	-	None	-	-	None	-	-	None	-	-	None
Storage Length	-	-	-	-	-	-	-	-	-	-	-	-
Veh in Median Storage, #	-	0	-	-	0	-	-	0	-	-	0	-
Grade, %	-	0	-	-	0	-	-	0	-	-	0	-
Peak Hour Factor	90	90	90	90	90	90	90	90	90	90	90	90
Heavy Vehicles, %	2	2	2	2	2	2	2	2	2	2	2	2
Mvmt Flow	1	147	0	22	49	36	0	133	11	31	131	0

Major/Minor	Major1			Major2			Minor1			Minor2		
Conflicting Flow All	85	0	0	147	0	0	326	278	147	332	260	67
Stage 1	-	-	-	-	-	-	149	149	-	111	111	-
Stage 2	-	-	-	-	-	-	177	129	-	221	149	-
Critical Hdwy	4.12	-	-	4.12	-	-	7.12	6.52	6.22	7.12	6.52	6.22
Critical Hdwy Stg 1	-	-	-	-	-	-	6.12	5.52	-	6.12	5.52	-
Critical Hdwy Stg 2	-	-	-	-	-	-	6.12	5.52	-	6.12	5.52	-
Follow-up Hdwy	2.218	-	-	2.218	-	-	3.518	4.018	3.318	3.518	4.018	3.318
Pot Cap-1 Maneuver	1512	-	-	1435	-	-	627	630	900	621	645	997
Stage 1	-	-	-	-	-	-	854	774	-	894	804	-
Stage 2	-	-	-	-	-	-	825	789	-	781	774	-
Platoon blocked, %		-	-		-	-						
Mov Cap-1 Maneuver	1512	-	-	1435	-	-	520	619	900	505	634	997
Mov Cap-2 Maneuver	-	-	-	-	-	-	520	619	-	505	634	-
Stage 1	-	-	-	-	-	-	853	773	-	893	791	-
Stage 2	-	-	-	-	-	-	677	776	-	638	773	-

Approach	EB	WB	NB	SB
HCM Control Delay, s	0.1	1.6	12.3	13.1
HCM LOS			B	B

Minor Lane/Major Mvmt	NBLn1	EBL	EBT	EBR	WBL	WBT	WBR	SBLn1
Capacity (veh/h)	634	1512	-	-	1435	-	-	604
HCM Lane V/C Ratio	0.228	0.001	-	-	0.015	-	-	0.269
HCM Control Delay (s)	12.3	7.4	0	-	7.5	0	-	13.1
HCM Lane LOS	B	A	A	-	A	A	-	B
HCM 95th %tile Q(veh)	0.9	0	-	-	0	-	-	1.1

HCM 6th Signalized Intersection Summary
1: US-395 & Dos Palmas Rd.

07/18/2019

Movement	EBL	EBT	EBR	WBL	WBT	WBR	NBL	NBT	NBR	SBL	SBT	SBR
Lane Configurations												
Traffic Volume (veh/h)	181	74	74	10	104	143	105	1574	24	138	1501	280
Future Volume (veh/h)	181	74	74	10	104	143	105	1574	24	138	1501	280
Initial Q (Qb), veh	0	0	0	0	0	0	0	0	0	0	0	0
Ped-Bike Adj(A_pbT)	1.00		1.00	1.00		1.00	1.00		1.00	1.00		1.00
Parking Bus, Adj	1.00	1.00	1.00	1.00	1.00	1.00	1.00	1.00	1.00	1.00	1.00	1.00
Work Zone On Approach		No			No			No			No	
Adj Sat Flow, veh/h/ln	1870	1870	1870	1870	1870	1870	1870	1870	1870	1870	1870	1870
Adj Flow Rate, veh/h	201	82	82	11	116	159	117	1749	27	153	1668	311
Peak Hour Factor	0.90	0.90	0.90	0.90	0.90	0.90	0.90	0.90	0.90	0.90	0.90	0.90
Percent Heavy Veh, %	2	2	2	2	2	2	2	2	2	2	2	2
Cap, veh/h	204	436	369	18	92	126	115	1955	872	165	1739	314
Arrive On Green	0.11	0.23	0.23	0.01	0.13	0.13	0.06	0.55	0.55	0.09	0.58	0.58
Sat Flow, veh/h	1781	1870	1585	1781	715	979	1781	3554	1585	1781	3006	543
Grp Volume(v), veh/h	201	82	82	11	0	275	117	1749	27	153	964	1015
Grp Sat Flow(s),veh/h/ln	1781	1870	1585	1781	0	1694	1781	1777	1585	1781	1777	1773
Q Serve(g_s), s	15.8	4.9	5.9	0.9	0.0	18.0	9.0	61.1	1.1	11.9	70.0	79.0
Cycle Q Clear(g_c), s	15.8	4.9	5.9	0.9	0.0	18.0	9.0	61.1	1.1	11.9	70.0	79.0
Prop In Lane	1.00		1.00	1.00		0.58	1.00		1.00	1.00		0.31
Lane Grp Cap(c), veh/h	204	436	369	18	0	218	115	1955	872	165	1028	1026
V/C Ratio(X)	0.99	0.19	0.22	0.62	0.00	1.26	1.02	0.89	0.03	0.92	0.94	0.99
Avail Cap(c_a), veh/h	204	436	369	51	0	218	115	1955	872	165	1028	1026
HCM Platoon Ratio	1.00	1.00	1.00	1.00	1.00	1.00	1.00	1.00	1.00	1.00	1.00	1.00
Upstream Filter(I)	1.00	1.00	1.00	1.00	0.00	1.00	0.09	0.09	0.09	1.00	1.00	1.00
Uniform Delay (d), s/veh	61.9	43.1	43.4	69.0	0.0	61.0	65.5	27.9	14.4	63.0	27.2	29.1
Incr Delay (d2), s/veh	59.3	0.2	0.3	30.5	0.0	149.6	30.9	0.7	0.0	48.6	16.6	25.7
Initial Q Delay(d3),s/veh	0.0	0.0	0.0	0.0	0.0	0.0	0.0	0.0	0.0	0.0	0.0	0.0
%ile BackOfQ(50%),veh/ln	10.5	2.3	0.0	0.5	0.0	16.8	5.1	25.3	0.4	7.6	33.2	39.3
Unsig. Movement Delay, s/veh												
LnGrp Delay(d),s/veh	121.2	43.3	43.7	99.6	0.0	210.6	96.4	28.6	14.4	111.6	43.8	54.8
LnGrp LOS	F	D	D	F	A	F	F	C	B	F	D	D
Approach Vol, veh/h		365			286			1893			2132	
Approach Delay, s/veh		86.3			206.3			32.6			53.9	
Approach LOS		F			F			C			D	

Timer - Assigned Phs	1	2	3	4	5	6	7	8
Phs Duration (G+Y+Rc), s	17.0	81.0	5.4	36.6	13.0	85.0	20.0	22.0
Change Period (Y+Rc), s	4.0	4.0	4.0	4.0	4.0	4.0	4.0	4.0
Max Green Setting (Gmax), s	13.0	77.0	4.0	30.0	9.0	81.0	16.0	18.0
Max Q Clear Time (g_c+I1), s	13.9	63.1	2.9	7.9	11.0	81.0	17.8	20.0
Green Ext Time (p_c), s	0.0	10.4	0.0	0.6	0.0	0.0	0.0	0.0

Intersection Summary	
HCM 6th Ctrl Delay	57.1
HCM 6th LOS	E

Notes

User approved pedestrian interval to be less than phase max green.

Intersection	
Int Delay, s/veh	8.5

Movement	EBL	EBT	EBR	WBL	WBT	WBR	NBL	NBT	NBR	SBL	SBT	SBR
Lane Configurations												
Traffic Vol, veh/h	5	97	11	44	166	24	11	97	41	10	80	10
Future Vol, veh/h	5	97	11	44	166	24	11	97	41	10	80	10
Conflicting Peds, #/hr	0	0	0	0	0	0	0	0	0	0	0	0
Sign Control	Stop	Stop	Stop	Stop	Stop	Stop	Free	Free	Free	Free	Free	Free
RT Channelized	-	-	None	-	-	None	-	-	None	-	-	None
Storage Length	-	-	-	-	-	-	-	-	-	-	-	-
Veh in Median Storage, #	-	0	-	-	0	-	-	0	-	-	0	-
Grade, %	-	0	-	-	0	-	-	0	-	-	0	-
Peak Hour Factor	90	90	90	90	90	90	90	90	90	90	90	90
Heavy Vehicles, %	2	2	2	2	2	2	2	2	2	2	2	2
Mvmt Flow	6	108	12	49	184	27	12	108	46	11	89	11

Major/Minor	Minor2			Minor1			Major1			Major2		
Conflicting Flow All	378	295	95	332	277	131	100	0	0	154	0	0
Stage 1	117	117	-	155	155	-	-	-	-	-	-	-
Stage 2	261	178	-	177	122	-	-	-	-	-	-	-
Critical Hdwy	7.12	6.52	6.22	7.12	6.52	6.22	4.12	-	-	4.12	-	-
Critical Hdwy Stg 1	6.12	5.52	-	6.12	5.52	-	-	-	-	-	-	-
Critical Hdwy Stg 2	6.12	5.52	-	6.12	5.52	-	-	-	-	-	-	-
Follow-up Hdwy	3.518	4.018	3.318	3.518	4.018	3.318	2.218	-	-	2.218	-	-
Pot Cap-1 Maneuver	580	616	962	621	631	919	1493	-	-	1426	-	-
Stage 1	888	799	-	847	769	-	-	-	-	-	-	-
Stage 2	744	752	-	825	795	-	-	-	-	-	-	-
Platoon blocked, %								-	-		-	-
Mov Cap-1 Maneuver	428	606	962	523	620	919	1493	-	-	1426	-	-
Mov Cap-2 Maneuver	428	606	-	523	620	-	-	-	-	-	-	-
Stage 1	880	793	-	839	762	-	-	-	-	-	-	-
Stage 2	543	745	-	698	789	-	-	-	-	-	-	-

Approach	EB	WB	NB	SB
HCM Control Delay, s	12.3	15	0.5	0.8
HCM LOS	B	C		

Minor Lane/Major Mvmt	NBL	NBT	NBR	EBLn1	WBLn1	SBL	SBT	SBR
Capacity (veh/h)	1493	-	-	617	619	1426	-	-
HCM Lane V/C Ratio	0.008	-	-	0.203	0.42	0.008	-	-
HCM Control Delay (s)	7.4	0	-	12.3	15	7.5	0	-
HCM Lane LOS	A	A	-	B	C	A	A	-
HCM 95th %tile Q(veh)	0	-	-	0.8	2.1	0	-	-

Intersection	
Int Delay, s/veh	1.2

Movement	EBL	EBT	WBT	WBR	SBL	SBR
Lane Configurations						
Traffic Vol, veh/h	8	140	234	80	40	4
Future Vol, veh/h	8	140	234	80	40	4
Conflicting Peds, #/hr	0	0	0	0	0	0
Sign Control	Free	Free	Free	Free	Stop	Stop
RT Channelized	-	None	-	None	-	None
Storage Length	-	-	-	-	0	-
Veh in Median Storage, #	-	0	0	-	0	-
Grade, %	-	0	0	-	0	-
Peak Hour Factor	90	90	90	90	90	90
Heavy Vehicles, %	2	2	2	2	2	2
Mvmt Flow	9	156	260	89	44	4

Major/Minor	Major1		Major2		Minor2	
Conflicting Flow All	349	0	-	0	479	305
Stage 1	-	-	-	-	305	-
Stage 2	-	-	-	-	174	-
Critical Hdwy	4.12	-	-	-	6.42	6.22
Critical Hdwy Stg 1	-	-	-	-	5.42	-
Critical Hdwy Stg 2	-	-	-	-	5.42	-
Follow-up Hdwy	2.218	-	-	-	3.518	3.318
Pot Cap-1 Maneuver	1210	-	-	-	545	735
Stage 1	-	-	-	-	748	-
Stage 2	-	-	-	-	856	-
Platoon blocked, %		-	-	-		
Mov Cap-1 Maneuver	1210	-	-	-	541	735
Mov Cap-2 Maneuver	-	-	-	-	541	-
Stage 1	-	-	-	-	742	-
Stage 2	-	-	-	-	856	-

Approach	EB	WB	SB
HCM Control Delay, s	0.4	0	12.1
HCM LOS			B

Minor Lane/Major Mvmt	EBL	EBT	WBT	WBR	SBLn1
Capacity (veh/h)	1210	-	-	-	554
HCM Lane V/C Ratio	0.007	-	-	-	0.088
HCM Control Delay (s)	8	0	-	-	12.1
HCM Lane LOS	A	A	-	-	B
HCM 95th %tile Q(veh)	0	-	-	-	0.3

Intersection	
Int Delay, s/veh	3.9

Movement	EBL	EBT	EBR	WBL	WBT	WBR	NBL	NBT	NBR	SBL	SBT	SBR
Lane Configurations												
Traffic Vol, veh/h	2	172	2	106	306	28	4	6	85	38	4	4
Future Vol, veh/h	2	172	2	106	306	28	4	6	85	38	4	4
Conflicting Peds, #/hr	0	0	0	0	0	0	0	0	0	0	0	0
Sign Control	Free	Free	Free	Free	Free	Free	Stop	Stop	Stop	Stop	Stop	Stop
RT Channelized	-	-	None	-	-	None	-	-	None	-	-	None
Storage Length	55	-	-	75	-	0	-	-	-	-	-	-
Veh in Median Storage, #	-	0	-	-	0	-	-	0	-	-	0	-
Grade, %	-	0	-	-	0	-	-	0	-	-	0	-
Peak Hour Factor	90	90	90	90	90	90	90	90	90	90	90	90
Heavy Vehicles, %	2	2	2	2	2	2	2	2	2	2	2	2
Mvmt Flow	2	191	2	118	340	31	4	7	94	42	4	4

Major/Minor	Major1			Major2			Minor1			Minor2		
Conflicting Flow All	371	0	0	193	0	0	792	803	192	823	773	340
Stage 1	-	-	-	-	-	-	196	196	-	576	576	-
Stage 2	-	-	-	-	-	-	596	607	-	247	197	-
Critical Hdwy	4.12	-	-	4.12	-	-	7.12	6.52	6.22	7.12	6.52	6.22
Critical Hdwy Stg 1	-	-	-	-	-	-	6.12	5.52	-	6.12	5.52	-
Critical Hdwy Stg 2	-	-	-	-	-	-	6.12	5.52	-	6.12	5.52	-
Follow-up Hdwy	2.218	-	-	2.218	-	-	3.518	4.018	3.318	3.518	4.018	3.318
Pot Cap-1 Maneuver	1188	-	-	1380	-	-	307	317	850	292	330	702
Stage 1	-	-	-	-	-	-	806	739	-	503	502	-
Stage 2	-	-	-	-	-	-	490	486	-	757	738	-
Platoon blocked, %		-	-		-	-						
Mov Cap-1 Maneuver	1188	-	-	1380	-	-	282	289	850	238	301	702
Mov Cap-2 Maneuver	-	-	-	-	-	-	282	289	-	238	301	-
Stage 1	-	-	-	-	-	-	804	738	-	502	459	-
Stage 2	-	-	-	-	-	-	441	444	-	666	737	-

Approach	EB	WB	NB	SB
HCM Control Delay, s	0.1	1.9	11	22.5
HCM LOS			B	C

Minor Lane/Major Mvmt	NBLn1	EBL	EBT	EBR	WBL	WBT	WBR	SBLn1
Capacity (veh/h)	704	1188	-	-	1380	-	-	257
HCM Lane V/C Ratio	0.15	0.002	-	-	0.085	-	-	0.199
HCM Control Delay (s)	11	8	-	-	7.9	-	-	22.5
HCM Lane LOS	B	A	-	-	A	-	-	C
HCM 95th %tile Q(veh)	0.5	0	-	-	0.3	-	-	0.7

Movement	EBL	EBT	EBR	WBL	WBT	WBR	NBL	NBT	NBR	SBL	SBT	SBR
Lane Configurations												
Traffic Volume (veh/h)	99	125	85	41	145	317	135	1259	68	338	1121	159
Future Volume (veh/h)	99	125	85	41	145	317	135	1259	68	338	1121	159
Initial Q (Qb), veh	0	0	0	0	0	0	0	0	0	0	0	0
Ped-Bike Adj(A_pbT)	1.00		1.00	1.00		1.00	1.00		1.00	1.00		1.00
Parking Bus, Adj	1.00	1.00	1.00	1.00	1.00	1.00	1.00	1.00	1.00	1.00	1.00	1.00
Work Zone On Approach		No			No			No			No	
Adj Sat Flow, veh/h/ln	1870	1870	1870	1870	1870	1870	1870	1870	1870	1870	1870	1870
Adj Flow Rate, veh/h	110	139	94	46	161	352	150	1399	76	376	1246	177
Peak Hour Factor	0.90	0.90	0.90	0.90	0.90	0.90	0.90	0.90	0.90	0.90	0.90	0.90
Percent Heavy Veh, %	2	2	2	2	2	2	2	2	2	2	2	2
Cap, veh/h	96	449	380	301	125	274	186	1371	74	356	1760	785
Arrive On Green	0.24	0.24	0.24	0.24	0.24	0.24	0.10	0.40	0.40	0.20	0.50	0.50
Sat Flow, veh/h	887	1870	1585	1147	522	1142	1781	3428	186	1781	3554	1585
Grp Volume(v), veh/h	110	139	94	46	0	513	150	723	752	376	1246	177
Grp Sat Flow(s),veh/h/ln	887	1870	1585	1147	0	1665	1781	1777	1837	1781	1777	1585
Q Serve(g_s), s	0.0	4.6	3.6	2.6	0.0	18.0	6.2	30.0	30.0	15.0	20.4	4.8
Cycle Q Clear(g_c), s	18.0	4.6	3.6	7.1	0.0	18.0	6.2	30.0	30.0	15.0	20.4	4.8
Prop In Lane	1.00		1.00	1.00		0.69	1.00		0.10	1.00		1.00
Lane Grp Cap(c), veh/h	96	449	380	301	0	400	186	711	735	356	1760	785
V/C Ratio(X)	1.15	0.31	0.25	0.15	0.00	1.28	0.81	1.02	1.02	1.06	0.71	0.23
Avail Cap(c_a), veh/h	96	449	380	301	0	400	214	711	735	356	1760	785
HCM Platoon Ratio	1.00	1.00	1.00	1.00	1.00	1.00	1.00	1.00	1.00	1.00	1.00	1.00
Upstream Filter(I)	1.00	1.00	1.00	1.00	0.00	1.00	1.00	1.00	1.00	0.21	0.21	0.21
Uniform Delay (d), s/veh	37.5	23.4	23.0	26.3	0.0	28.5	32.8	22.5	22.5	30.0	14.7	10.7
Incr Delay (d2), s/veh	136.5	0.4	0.3	0.2	0.0	145.7	17.7	38.3	39.1	38.1	0.5	0.1
Initial Q Delay(d3),s/veh	0.0	0.0	0.0	0.0	0.0	0.0	0.0	0.0	0.0	0.0	0.0	0.0
%ile BackOfQ(50%),veh/ln	5.4	2.0	1.3	0.7	0.0	23.0	3.5	18.9	19.7	9.9	7.4	1.5
Unsig. Movement Delay, s/veh												
LnGrp Delay(d),s/veh	174.0	23.8	23.4	26.6	0.0	174.2	50.5	60.8	61.6	68.1	15.2	10.9
LnGrp LOS	F	C	C	C	A	F	D	F	F	F	B	B
Approach Vol, veh/h		343			559			1625			1799	
Approach Delay, s/veh		71.8			162.0			60.2			25.9	
Approach LOS		E			F			E			C	

Timer - Assigned Phs	1	2		4	5	6		8
Phs Duration (G+Y+Rc), s	19.0	34.0		22.0	11.8	41.2		22.0
Change Period (Y+Rc), s	4.0	4.0		4.0	4.0	4.0		4.0
Max Green Setting (Gmax), s	15.0	30.0		18.0	9.0	36.0		18.0
Max Q Clear Time (g_c+I1), s	17.0	32.0		20.0	8.2	22.4		20.0
Green Ext Time (p_c), s	0.0	0.0		0.0	0.0	7.9		0.0

Intersection Summary	
HCM 6th Ctrl Delay	60.0
HCM 6th LOS	E

Intersection	
Int Delay, s/veh	0.3

Movement	EBL	EBR	NBL	NBT	SBT	SBR
Lane Configurations						
Traffic Vol, veh/h	11	0	1	197	129	18
Future Vol, veh/h	11	0	1	197	129	18
Conflicting Peds, #/hr	0	0	0	0	0	0
Sign Control	Stop	Stop	Free	Free	Free	Free
RT Channelized	-	None	-	None	-	None
Storage Length	0	-	-	-	-	-
Veh in Median Storage, #	0	-	-	0	0	-
Grade, %	0	-	-	0	0	-
Peak Hour Factor	90	90	90	90	90	90
Heavy Vehicles, %	2	2	2	2	2	2
Mvmt Flow	12	0	1	219	143	20

Major/Minor	Minor2		Major1		Major2	
Conflicting Flow All	374	153	163	0	-	0
Stage 1	153	-	-	-	-	-
Stage 2	221	-	-	-	-	-
Critical Hdwy	6.42	6.22	4.12	-	-	-
Critical Hdwy Stg 1	5.42	-	-	-	-	-
Critical Hdwy Stg 2	5.42	-	-	-	-	-
Follow-up Hdwy	3.518	3.318	2.218	-	-	-
Pot Cap-1 Maneuver	627	893	1416	-	-	-
Stage 1	875	-	-	-	-	-
Stage 2	816	-	-	-	-	-
Platoon blocked, %				-	-	-
Mov Cap-1 Maneuver	626	893	1416	-	-	-
Mov Cap-2 Maneuver	626	-	-	-	-	-
Stage 1	874	-	-	-	-	-
Stage 2	816	-	-	-	-	-

Approach	EB	NB	SB
HCM Control Delay, s	10.9	0	0
HCM LOS	B		

Minor Lane/Major Mvmt	NBL	NBT	EBLn1	SBT	SBR
Capacity (veh/h)	1416	-	626	-	-
HCM Lane V/C Ratio	0.001	-	0.02	-	-
HCM Control Delay (s)	7.5	0	10.9	-	-
HCM Lane LOS	A	A	B	-	-
HCM 95th %tile Q(veh)	0	-	0.1	-	-

Intersection	
Int Delay, s/veh	6.4

Movement	EBL	EBT	EBR	WBL	WBT	WBR	NBL	NBT	NBR	SBL	SBT	SBR
Lane Configurations												
Traffic Vol, veh/h	1	87	0	13	149	28	0	114	13	30	92	0
Future Vol, veh/h	1	87	0	13	149	28	0	114	13	30	92	0
Conflicting Peds, #/hr	0	0	0	0	0	0	0	0	0	0	0	0
Sign Control	Free	Free	Free	Free	Free	Free	Stop	Stop	Stop	Stop	Stop	Stop
RT Channelized	-	-	None	-	-	None	-	-	None	-	-	None
Storage Length	-	-	-	-	-	-	-	-	-	-	-	-
Veh in Median Storage, #	-	0	-	-	0	-	-	0	-	-	0	-
Grade, %	-	0	-	-	0	-	-	0	-	-	0	-
Peak Hour Factor	90	90	90	90	90	90	90	90	90	90	90	90
Heavy Vehicles, %	2	2	2	2	2	2	2	2	2	2	2	2
Mvmt Flow	1	97	0	14	166	31	0	127	14	33	102	0

Major/Minor	Major1			Major2			Minor1			Minor2		
Conflicting Flow All	197	0	0	97	0	0	360	324	97	380	309	182
Stage 1	-	-	-	-	-	-	99	99	-	210	210	-
Stage 2	-	-	-	-	-	-	261	225	-	170	99	-
Critical Hdwy	4.12	-	-	4.12	-	-	7.12	6.52	6.22	7.12	6.52	6.22
Critical Hdwy Stg 1	-	-	-	-	-	-	6.12	5.52	-	6.12	5.52	-
Critical Hdwy Stg 2	-	-	-	-	-	-	6.12	5.52	-	6.12	5.52	-
Follow-up Hdwy	2.218	-	-	2.218	-	-	3.518	4.018	3.318	3.518	4.018	3.318
Pot Cap-1 Maneuver	1376	-	-	1496	-	-	596	594	959	578	605	861
Stage 1	-	-	-	-	-	-	907	813	-	792	728	-
Stage 2	-	-	-	-	-	-	744	718	-	832	813	-
Platoon blocked, %		-	-		-	-						
Mov Cap-1 Maneuver	1376	-	-	1496	-	-	513	587	959	470	598	861
Mov Cap-2 Maneuver	-	-	-	-	-	-	513	587	-	470	598	-
Stage 1	-	-	-	-	-	-	906	812	-	791	720	-
Stage 2	-	-	-	-	-	-	631	710	-	691	812	-

Approach	EB	WB	NB	SB
HCM Control Delay, s	0.1	0.5	12.7	13.5
HCM LOS			B	B

Minor Lane/Major Mvmt	NBLn1	EBL	EBT	EBR	WBL	WBT	WBR	SBLn1
Capacity (veh/h)	611	1376	-	-	1496	-	-	560
HCM Lane V/C Ratio	0.231	0.001	-	-	0.01	-	-	0.242
HCM Control Delay (s)	12.7	7.6	0	-	7.4	0	-	13.5
HCM Lane LOS	B	A	A	-	A	A	-	B
HCM 95th %tile Q(veh)	0.9	0	-	-	0	-	-	0.9

HCM 6th Signalized Intersection Summary
1: US-395 & Dos Palmas Rd.

07/18/2019

Movement	EBL	EBT	EBR	WBL	WBT	WBR	NBL	NBT	NBR	SBL	SBT	SBR
Lane Configurations												
Traffic Volume (veh/h)	320	135	104	49	77	250	37	1373	25	151	1211	187
Future Volume (veh/h)	320	135	104	49	77	250	37	1373	25	151	1211	187
Initial Q (Qb), veh	0	0	0	0	0	0	0	0	0	0	0	0
Ped-Bike Adj(A_pbT)	1.00		1.00	1.00		1.00	1.00		1.00	1.00		1.00
Parking Bus, Adj	1.00	1.00	1.00	1.00	1.00	1.00	1.00	1.00	1.00	1.00	1.00	1.00
Work Zone On Approach		No			No			No			No	
Adj Sat Flow, veh/h/ln	1870	1870	1870	1870	1870	1870	1870	1870	1870	1870	1870	1870
Adj Flow Rate, veh/h	356	150	116	54	86	278	41	1526	28	168	1346	208
Peak Hour Factor	0.90	0.90	0.90	0.90	0.90	0.90	0.90	0.90	0.90	0.90	0.90	0.90
Percent Heavy Veh, %	2	2	2	2	2	2	2	2	2	2	2	2
Cap, veh/h	356	566	480	70	55	178	52	1540	687	163	1531	234
Arrive On Green	0.20	0.30	0.30	0.04	0.14	0.14	0.03	0.43	0.43	0.09	0.50	0.50
Sat Flow, veh/h	1781	1870	1585	1781	388	1256	1781	3554	1585	1781	3089	473
Grp Volume(v), veh/h	356	150	116	54	0	364	41	1526	28	168	769	785
Grp Sat Flow(s),veh/h/ln	1781	1870	1585	1781	0	1644	1781	1777	1585	1781	1777	1785
Q Serve(g_s), s	24.0	7.3	6.6	3.6	0.0	17.0	2.7	51.2	1.2	11.0	46.2	47.5
Cycle Q Clear(g_c), s	24.0	7.3	6.6	3.6	0.0	17.0	2.7	51.2	1.2	11.0	46.2	47.5
Prop In Lane	1.00		1.00	1.00		0.76	1.00		1.00	1.00		0.26
Lane Grp Cap(c), veh/h	356	566	480	70	0	233	52	1540	687	163	881	885
V/C Ratio(X)	1.00	0.27	0.24	0.77	0.00	1.56	0.78	0.99	0.04	1.03	0.87	0.89
Avail Cap(c_a), veh/h	356	566	480	134	0	233	59	1540	687	163	881	885
HCM Platoon Ratio	1.00	1.00	1.00	1.00	1.00	1.00	1.00	1.00	1.00	1.00	1.00	1.00
Upstream Filter(I)	1.00	1.00	1.00	1.00	0.00	1.00	0.09	0.09	0.09	1.00	1.00	1.00
Uniform Delay (d), s/veh	48.0	31.7	31.5	57.1	0.0	51.5	57.8	33.8	19.6	54.5	26.9	27.3
Incr Delay (d2), s/veh	47.5	0.2	0.3	16.5	0.0	273.1	5.4	5.1	0.0	78.2	11.7	12.8
Initial Q Delay(d3),s/veh	0.0	0.0	0.0	0.0	0.0	0.0	0.0	0.0	0.0	0.0	0.0	0.0
%ile BackOfQ(50%),veh/ln	15.3	3.4	2.6	1.9	0.0	24.6	1.3	22.5	0.5	8.5	21.7	22.7
Unsig. Movement Delay, s/veh												
LnGrp Delay(d),s/veh	95.5	32.0	31.8	73.6	0.0	324.6	63.2	38.9	19.6	132.7	38.6	40.1
LnGrp LOS	F	C	C	E	A	F	E	D	B	F	D	D
Approach Vol, veh/h		622			418			1595			1722	
Approach Delay, s/veh		68.3			292.1			39.2			48.5	
Approach LOS		E			F			D			D	

Timer - Assigned Phs	1	2	3	4	5	6	7	8
Phs Duration (G+Y+Rc), s	15.0	56.0	8.7	40.3	7.5	63.5	28.0	21.0
Change Period (Y+Rc), s	4.0	4.0	4.0	4.0	4.0	4.0	4.0	4.0
Max Green Setting (Gmax), s	11.0	52.0	9.0	32.0	4.0	59.0	24.0	17.0
Max Q Clear Time (g_c+I1), s	13.0	53.2	5.6	9.3	4.7	49.5	26.0	19.0
Green Ext Time (p_c), s	0.0	0.0	0.0	1.2	0.0	6.8	0.0	0.0

Intersection Summary	
HCM 6th Ctrl Delay	71.3
HCM 6th LOS	E

Intersection	
Int Delay, s/veh	19.9

Movement	EBL	EBT	EBR	WBL	WBT	WBR	NBL	NBT	NBR	SBL	SBT	SBR
Lane Configurations												
Traffic Vol, veh/h	7	163	4	134	61	13	8	169	185	26	187	8
Future Vol, veh/h	7	163	4	134	61	13	8	169	185	26	187	8
Conflicting Peds, #/hr	0	0	0	0	0	0	0	0	0	0	0	0
Sign Control	Stop	Stop	Stop	Stop	Stop	Stop	Free	Free	Free	Free	Free	Free
RT Channelized	-	-	None	-	-	None	-	-	None	-	-	None
Storage Length	-	-	-	-	-	-	-	-	-	-	-	-
Veh in Median Storage, #	-	0	-	-	0	-	-	0	-	-	0	-
Grade, %	-	0	-	-	0	-	-	0	-	-	0	-
Peak Hour Factor	90	90	90	90	90	90	90	90	90	90	90	90
Heavy Vehicles, %	2	2	2	2	2	2	2	2	2	2	2	2
Mvmt Flow	8	181	4	149	68	14	9	188	206	29	208	9

Major/Minor	Minor2			Minor1			Major1			Major2		
Conflicting Flow All	621	683	213	672	584	291	217	0	0	394	0	0
Stage 1	271	271	-	309	309	-	-	-	-	-	-	-
Stage 2	350	412	-	363	275	-	-	-	-	-	-	-
Critical Hdwy	7.12	6.52	6.22	7.12	6.52	6.22	4.12	-	-	4.12	-	-
Critical Hdwy Stg 1	6.12	5.52	-	6.12	5.52	-	-	-	-	-	-	-
Critical Hdwy Stg 2	6.12	5.52	-	6.12	5.52	-	-	-	-	-	-	-
Follow-up Hdwy	3.518	4.018	3.318	3.518	4.018	3.318	2.218	-	-	2.218	-	-
Pot Cap-1 Maneuver	400	372	827	370	423	748	1353	-	-	1165	-	-
Stage 1	735	685	-	701	660	-	-	-	-	-	-	-
Stage 2	666	594	-	656	683	-	-	-	-	-	-	-
Platoon blocked, %								-	-		-	-
Mov Cap-1 Maneuver	333	358	827	216	407	748	1353	-	-	1165	-	-
Mov Cap-2 Maneuver	333	358	-	216	407	-	-	-	-	-	-	-
Stage 1	728	666	-	695	654	-	-	-	-	-	-	-
Stage 2	580	589	-	462	664	-	-	-	-	-	-	-

Approach	EB	WB	NB	SB
HCM Control Delay, s	25.8	69.1	0.2	1
HCM LOS	D	F		

Minor Lane/Major Mvmt	NBL	NBT	NBR	EBLn1	WBLn1	SBL	SBT	SBR
Capacity (veh/h)	1353	-	-	362	264	1165	-	-
HCM Lane V/C Ratio	0.007	-	-	0.534	0.875	0.025	-	-
HCM Control Delay (s)	7.7	0	-	25.8	69.1	8.2	0	-
HCM Lane LOS	A	A	-	D	F	A	A	-
HCM 95th %tile Q(veh)	0	-	-	3	7.5	0.1	-	-

Intersection	
Int Delay, s/veh	3

Movement	EBL	EBT	WBT	WBR	SBL	SBR
Lane Configurations						
Traffic Vol, veh/h	97	302	171	208	62	32
Future Vol, veh/h	97	302	171	208	62	32
Conflicting Peds, #/hr	0	0	0	0	0	0
Sign Control	Free	Free	Free	Free	Stop	Stop
RT Channelized	-	None	-	None	-	None
Storage Length	-	-	-	-	0	-
Veh in Median Storage, #	-	0	0	-	0	-
Grade, %	-	0	0	-	0	-
Peak Hour Factor	90	90	90	90	90	90
Heavy Vehicles, %	2	2	2	2	2	2
Mvmt Flow	108	336	190	231	69	36

Major/Minor	Major1		Major2		Minor2	
Conflicting Flow All	421	0	-	0	858	306
Stage 1	-	-	-	-	306	-
Stage 2	-	-	-	-	552	-
Critical Hdwy	4.12	-	-	-	6.42	6.22
Critical Hdwy Stg 1	-	-	-	-	5.42	-
Critical Hdwy Stg 2	-	-	-	-	5.42	-
Follow-up Hdwy	2.218	-	-	-	3.518	3.318
Pot Cap-1 Maneuver	1138	-	-	-	327	734
Stage 1	-	-	-	-	747	-
Stage 2	-	-	-	-	577	-
Platoon blocked, %		-	-	-		
Mov Cap-1 Maneuver	1138	-	-	-	289	734
Mov Cap-2 Maneuver	-	-	-	-	289	-
Stage 1	-	-	-	-	660	-
Stage 2	-	-	-	-	577	-

Approach	EB	WB	SB
HCM Control Delay, s	2.1	0	18.8
HCM LOS			C

Minor Lane/Major Mvmt	EBL	EBT	WBT	WBR	SBLn1
Capacity (veh/h)	1138	-	-	-	364
HCM Lane V/C Ratio	0.095	-	-	-	0.287
HCM Control Delay (s)	8.5	0	-	-	18.8
HCM Lane LOS	A	A	-	-	C
HCM 95th %tile Q(veh)	0.3	-	-	-	1.2

Intersection	
Int Delay, s/veh	12.8

Movement	EBL	EBT	EBR	WBL	WBT	WBR	NBL	NBT	NBR	SBL	SBT	SBR
Lane Configurations												
Traffic Vol, veh/h	22	339	5	66	277	16	47	8	110	65	60	51
Future Vol, veh/h	22	339	5	66	277	16	47	8	110	65	60	51
Conflicting Peds, #/hr	0	0	0	0	0	0	0	0	0	0	0	0
Sign Control	Free	Free	Free	Free	Free	Free	Stop	Stop	Stop	Stop	Stop	Stop
RT Channelized	-	-	None	-	-	None	-	-	None	-	-	None
Storage Length	55	-	-	75	-	0	-	-	-	-	-	-
Veh in Median Storage, #	-	0	-	-	0	-	-	0	-	-	0	-
Grade, %	-	0	-	-	0	-	-	0	-	-	0	-
Peak Hour Factor	90	90	90	90	90	90	90	90	90	90	90	90
Heavy Vehicles, %	2	2	2	2	2	2	2	2	2	2	2	2
Mvmt Flow	24	377	6	73	308	18	52	9	122	72	67	57

Major/Minor	Major1			Major2			Minor1			Minor2		
Conflicting Flow All	326	0	0	383	0	0	953	900	380	948	885	308
Stage 1	-	-	-	-	-	-	428	428	-	454	454	-
Stage 2	-	-	-	-	-	-	525	472	-	494	431	-
Critical Hdwy	4.12	-	-	4.12	-	-	7.12	6.52	6.22	7.12	6.52	6.22
Critical Hdwy Stg 1	-	-	-	-	-	-	6.12	5.52	-	6.12	5.52	-
Critical Hdwy Stg 2	-	-	-	-	-	-	6.12	5.52	-	6.12	5.52	-
Follow-up Hdwy	2.218	-	-	2.218	-	-	3.518	4.018	3.318	3.518	4.018	3.318
Pot Cap-1 Maneuver	1234	-	-	1175	-	-	239	278	667	241	284	732
Stage 1	-	-	-	-	-	-	605	585	-	586	569	-
Stage 2	-	-	-	-	-	-	536	559	-	557	583	-
Platoon blocked, %		-	-		-	-						
Mov Cap-1 Maneuver	1234	-	-	1175	-	-	167	256	667	180	261	732
Mov Cap-2 Maneuver	-	-	-	-	-	-	167	256	-	180	261	-
Stage 1	-	-	-	-	-	-	594	574	-	575	534	-
Stage 2	-	-	-	-	-	-	406	524	-	439	572	-

Approach	EB	WB	NB	SB
HCM Control Delay, s	0.5	1.5	26.7	48.5
HCM LOS			D	E

Minor Lane/Major Mvmt	NBLn1	EBL	EBT	EBR	WBL	WBT	WBR	SBLn1
Capacity (veh/h)	345	1234	-	-	1175	-	-	266
HCM Lane V/C Ratio	0.531	0.02	-	-	0.062	-	-	0.735
HCM Control Delay (s)	26.7	8	-	-	8.3	-	-	48.5
HCM Lane LOS	D	A	-	-	A	-	-	E
HCM 95th %tile Q(veh)	3	0.1	-	-	0.2	-	-	5.2

Movement	EBL	EBT	EBR	WBL	WBT	WBR	NBL	NBT	NBR	SBL	SBT	SBR
Lane Configurations												
Traffic Volume (veh/h)	176	211	131	97	158	255	61	998	53	247	971	152
Future Volume (veh/h)	176	211	131	97	158	255	61	998	53	247	971	152
Initial Q (Qb), veh	0	0	0	0	0	0	0	0	0	0	0	0
Ped-Bike Adj(A_pbT)	1.00		1.00	1.00		1.00	1.00		1.00	1.00		1.00
Parking Bus, Adj	1.00	1.00	1.00	1.00	1.00	1.00	1.00	1.00	1.00	1.00	1.00	1.00
Work Zone On Approach		No			No			No			No	
Adj Sat Flow, veh/h/ln	1870	1870	1870	1870	1870	1870	1870	1870	1870	1870	1870	1870
Adj Flow Rate, veh/h	196	234	146	108	176	283	68	1109	59	274	1079	169
Peak Hour Factor	0.90	0.90	0.90	0.90	0.90	0.90	0.90	0.90	0.90	0.90	0.90	0.90
Percent Heavy Veh, %	2	2	2	2	2	2	2	2	2	2	2	2
Cap, veh/h	221	701	594	376	242	389	87	1115	59	267	1514	675
Arrive On Green	0.38	0.38	0.38	0.38	0.38	0.38	0.05	0.32	0.32	0.15	0.43	0.43
Sat Flow, veh/h	933	1870	1585	1003	646	1038	1781	3432	183	1781	3554	1585
Grp Volume(v), veh/h	196	234	146	108	0	459	68	574	594	274	1079	169
Grp Sat Flow(s),veh/h/ln	933	1870	1585	1003	0	1684	1781	1777	1838	1781	1777	1585
Q Serve(g_s), s	11.3	7.2	5.1	6.9	0.0	18.7	3.0	25.8	25.8	12.0	20.0	5.5
Cycle Q Clear(g_c), s	30.0	7.2	5.1	14.0	0.0	18.7	3.0	25.8	25.8	12.0	20.0	5.5
Prop In Lane	1.00		1.00	1.00		0.62	1.00		0.10	1.00		1.00
Lane Grp Cap(c), veh/h	221	701	594	376	0	631	87	577	597	267	1514	675
V/C Ratio(X)	0.89	0.33	0.25	0.29	0.00	0.73	0.78	0.99	0.99	1.03	0.71	0.25
Avail Cap(c_a), veh/h	221	701	594	376	0	631	111	577	597	267	1514	675
HCM Platoon Ratio	1.00	1.00	1.00	1.00	1.00	1.00	1.00	1.00	1.00	1.00	1.00	1.00
Upstream Filter(I)	1.00	1.00	1.00	1.00	0.00	1.00	1.00	1.00	1.00	0.46	0.46	0.46
Uniform Delay (d), s/veh	36.2	17.9	17.2	22.9	0.0	21.5	37.6	26.9	26.9	34.0	18.9	14.7
Incr Delay (d2), s/veh	32.0	0.3	0.2	0.4	0.0	4.2	23.2	36.0	35.6	44.0	1.3	0.4
Initial Q Delay(d3),s/veh	0.0	0.0	0.0	0.0	0.0	0.0	0.0	0.0	0.0	0.0	0.0	0.0
%ile BackOfQ(50%),veh/ln	5.7	3.0	1.8	1.6	0.0	7.7	1.9	16.0	16.5	8.3	7.9	1.9
Unsig. Movement Delay, s/veh												
LnGrp Delay(d),s/veh	68.2	18.1	17.4	23.3	0.0	25.7	60.8	62.9	62.5	78.0	20.3	15.2
LnGrp LOS	E	B	B	C	A	C	E	E	E	F	C	B
Approach Vol, veh/h		576			567			1236			1522	
Approach Delay, s/veh		35.0			25.2			62.6			30.1	
Approach LOS		C			C			E			C	

Timer - Assigned Phs	1	2		4	5	6		8				
Phs Duration (G+Y+Rc), s	16.0	30.0		34.0	7.9	38.1		34.0				
Change Period (Y+Rc), s	4.0	4.0		4.0	4.0	4.0		4.0				
Max Green Setting (Gmax), s	12.0	26.0		30.0	5.0	33.0		30.0				
Max Q Clear Time (g_c+I1), s	14.0	27.8		32.0	5.0	22.0		20.7				
Green Ext Time (p_c), s	0.0	0.0		0.0	0.0	6.0		2.5				

Intersection Summary		
HCM 6th Ctrl Delay		40.4
HCM 6th LOS		D

Intersection	
Int Delay, s/veh	0.2

Movement	EBL	EBR	NBL	NBT	SBT	SBR
Lane Configurations						
Traffic Vol, veh/h	6	0	0	228	211	4
Future Vol, veh/h	6	0	0	228	211	4
Conflicting Peds, #/hr	0	0	0	0	0	0
Sign Control	Stop	Stop	Free	Free	Free	Free
RT Channelized	-	None	-	None	-	None
Storage Length	0	-	0	-	-	-
Veh in Median Storage, #	0	-	-	0	0	-
Grade, %	0	-	-	0	0	-
Peak Hour Factor	90	90	90	90	90	90
Heavy Vehicles, %	2	2	2	2	2	2
Mvmt Flow	7	0	0	253	234	4

Major/Minor	Minor2		Major1		Major2	
Conflicting Flow All	489	236	238	0	-	0
Stage 1	236	-	-	-	-	-
Stage 2	253	-	-	-	-	-
Critical Hdwy	6.42	6.22	4.12	-	-	-
Critical Hdwy Stg 1	5.42	-	-	-	-	-
Critical Hdwy Stg 2	5.42	-	-	-	-	-
Follow-up Hdwy	3.518	3.318	2.218	-	-	-
Pot Cap-1 Maneuver	538	803	1329	-	-	-
Stage 1	803	-	-	-	-	-
Stage 2	789	-	-	-	-	-
Platoon blocked, %				-	-	-
Mov Cap-1 Maneuver	538	803	1329	-	-	-
Mov Cap-2 Maneuver	538	-	-	-	-	-
Stage 1	803	-	-	-	-	-
Stage 2	789	-	-	-	-	-

Approach	EB	NB	SB
HCM Control Delay, s	11.8	0	0
HCM LOS	B		

Minor Lane/Major Mvmt	NBL	NBT	EBLn1	SBT	SBR
Capacity (veh/h)	1329	-	538	-	-
HCM Lane V/C Ratio	-	-	0.012	-	-
HCM Control Delay (s)	0	-	11.8	-	-
HCM Lane LOS	A	-	B	-	-
HCM 95th %tile Q(veh)	0	-	0	-	-

Intersection	
Int Delay, s/veh	9.2

Movement	EBL	EBT	EBR	WBL	WBT	WBR	NBL	NBT	NBR	SBL	SBT	SBR
Lane Configurations												
Traffic Vol, veh/h	1	132	0	20	44	86	0	147	10	76	142	0
Future Vol, veh/h	1	132	0	20	44	86	0	147	10	76	142	0
Conflicting Peds, #/hr	0	0	0	0	0	0	0	0	0	0	0	0
Sign Control	Free	Free	Free	Free	Free	Free	Stop	Stop	Stop	Stop	Stop	Stop
RT Channelized	-	-	None	-	-	None	-	-	None	-	-	None
Storage Length	-	-	-	-	-	-	-	-	-	-	-	-
Veh in Median Storage, #	-	0	-	-	0	-	-	0	-	-	0	-
Grade, %	-	0	-	-	0	-	-	0	-	-	0	-
Peak Hour Factor	90	90	90	90	90	90	90	90	90	90	90	90
Heavy Vehicles, %	2	2	2	2	2	2	2	2	2	2	2	2
Mvmt Flow	1	147	0	22	49	96	0	163	11	84	158	0

Major/Minor	Major1			Major2			Minor1			Minor2		
Conflicting Flow All	145	0	0	147	0	0	369	338	147	377	290	97
Stage 1	-	-	-	-	-	-	149	149	-	141	141	-
Stage 2	-	-	-	-	-	-	220	189	-	236	149	-
Critical Hdwy	4.12	-	-	4.12	-	-	7.12	6.52	6.22	7.12	6.52	6.22
Critical Hdwy Stg 1	-	-	-	-	-	-	6.12	5.52	-	6.12	5.52	-
Critical Hdwy Stg 2	-	-	-	-	-	-	6.12	5.52	-	6.12	5.52	-
Follow-up Hdwy	2.218	-	-	2.218	-	-	3.518	4.018	3.318	3.518	4.018	3.318
Pot Cap-1 Maneuver	1437	-	-	1435	-	-	588	583	900	580	620	959
Stage 1	-	-	-	-	-	-	854	774	-	862	780	-
Stage 2	-	-	-	-	-	-	782	744	-	767	774	-
Platoon blocked, %		-	-		-	-						
Mov Cap-1 Maneuver	1437	-	-	1435	-	-	465	573	900	441	609	959
Mov Cap-2 Maneuver	-	-	-	-	-	-	465	573	-	441	609	-
Stage 1	-	-	-	-	-	-	853	773	-	861	767	-
Stage 2	-	-	-	-	-	-	611	731	-	597	773	-

Approach	EB	WB	NB	SB
HCM Control Delay, s	0.1	1	13.7	17.1
HCM LOS			B	C

Minor Lane/Major Mvmt	NBLn1	EBL	EBT	EBR	WBL	WBT	WBR	SBLn1
Capacity (veh/h)	587	1437	-	-	1435	-	-	538
HCM Lane V/C Ratio	0.297	0.001	-	-	0.015	-	-	0.45
HCM Control Delay (s)	13.7	7.5	0	-	7.5	0	-	17.1
HCM Lane LOS	B	A	A	-	A	A	-	C
HCM 95th %tile Q(veh)	1.2	0	-	-	0	-	-	2.3

Intersection	
Int Delay, s/veh	5.5

Movement	WBL	WBR	NBT	NBR	SBL	SBT
Lane Configurations						
Traffic Vol, veh/h	48	132	161	54	149	122
Future Vol, veh/h	48	132	161	54	149	122
Conflicting Peds, #/hr	0	0	0	0	0	0
Sign Control	Stop	Stop	Free	Free	Free	Free
RT Channelized	-	None	-	None	-	None
Storage Length	0	-	-	-	0	-
Veh in Median Storage, #	0	-	0	-	-	0
Grade, %	0	-	0	-	-	0
Peak Hour Factor	90	90	90	90	90	90
Heavy Vehicles, %	2	2	2	2	2	2
Mvmt Flow	53	147	179	60	166	136

Major/Minor	Minor1		Major1		Major2	
Conflicting Flow All	677	209	0	0	239	0
Stage 1	209	-	-	-	-	-
Stage 2	468	-	-	-	-	-
Critical Hdwy	6.42	6.22	-	-	4.12	-
Critical Hdwy Stg 1	5.42	-	-	-	-	-
Critical Hdwy Stg 2	5.42	-	-	-	-	-
Follow-up Hdwy	3.518	3.318	-	-	2.218	-
Pot Cap-1 Maneuver	418	831	-	-	1328	-
Stage 1	826	-	-	-	-	-
Stage 2	630	-	-	-	-	-
Platoon blocked, %			-	-		-
Mov Cap-1 Maneuver	366	831	-	-	1328	-
Mov Cap-2 Maneuver	366	-	-	-	-	-
Stage 1	723	-	-	-	-	-
Stage 2	630	-	-	-	-	-

Approach	WB	NB	SB
HCM Control Delay, s	13.5	0	4.5
HCM LOS	B		

Minor Lane/Major Mvmt	NBT	NBR	WBLn1	SBL	SBT
Capacity (veh/h)	-	-	621	1328	-
HCM Lane V/C Ratio	-	-	0.322	0.125	-
HCM Control Delay (s)	-	-	13.5	8.1	-
HCM Lane LOS	-	-	B	A	-
HCM 95th %tile Q(veh)	-	-	1.4	0.4	-

Intersection	
Int Delay, s/veh	2.2

Movement	WBL	WBR	NBT	NBR	SBL	SBT
Lane Configurations						
Traffic Vol, veh/h	24	36	179	27	41	129
Future Vol, veh/h	24	36	179	27	41	129
Conflicting Peds, #/hr	0	0	0	0	0	0
Sign Control	Stop	Stop	Free	Free	Free	Free
RT Channelized	-	None	-	None	-	None
Storage Length	0	-	-	-	-	-
Veh in Median Storage, #	0	-	0	-	-	0
Grade, %	0	-	0	-	-	0
Peak Hour Factor	90	90	90	90	90	90
Heavy Vehicles, %	2	2	2	2	2	2
Mvmt Flow	27	40	199	30	46	143

Major/Minor	Minor1		Major1		Major2	
Conflicting Flow All	449	214	0	0	229	0
Stage 1	214	-	-	-	-	-
Stage 2	235	-	-	-	-	-
Critical Hdwy	6.42	6.22	-	-	4.12	-
Critical Hdwy Stg 1	5.42	-	-	-	-	-
Critical Hdwy Stg 2	5.42	-	-	-	-	-
Follow-up Hdwy	3.518	3.318	-	-	2.218	-
Pot Cap-1 Maneuver	568	826	-	-	1339	-
Stage 1	822	-	-	-	-	-
Stage 2	804	-	-	-	-	-
Platoon blocked, %			-	-		-
Mov Cap-1 Maneuver	547	826	-	-	1339	-
Mov Cap-2 Maneuver	547	-	-	-	-	-
Stage 1	792	-	-	-	-	-
Stage 2	804	-	-	-	-	-

Approach	WB	NB	SB
HCM Control Delay, s	10.8	0	1.9
HCM LOS	B		

Minor Lane/Major Mvmt	NBT	NBR	WBLn1	SBL	SBT
Capacity (veh/h)	-	-	686	1339	-
HCM Lane V/C Ratio	-	-	0.097	0.034	-
HCM Control Delay (s)	-	-	10.8	7.8	0
HCM Lane LOS	-	-	B	A	A
HCM 95th %tile Q(veh)	-	-	0.3	0.1	-

HCM 6th Signalized Intersection Summary
1: US-395 & Dos Palmas Rd.

07/18/2019

Movement	EBL	EBT	EBR	WBL	WBT	WBR	NBL	NBT	NBR	SBL	SBT	SBR
Lane Configurations												
Traffic Volume (veh/h)	198	91	74	10	119	143	105	1600	24	138	1523	295
Future Volume (veh/h)	198	91	74	10	119	143	105	1600	24	138	1523	295
Initial Q (Qb), veh	0	0	0	0	0	0	0	0	0	0	0	0
Ped-Bike Adj(A_pbT)	1.00		1.00	1.00		1.00	1.00		1.00	1.00		1.00
Parking Bus, Adj	1.00	1.00	1.00	1.00	1.00	1.00	1.00	1.00	1.00	1.00	1.00	1.00
Work Zone On Approach		No			No			No			No	
Adj Sat Flow, veh/h/ln	1870	1870	1870	1870	1870	1870	1870	1870	1870	1870	1870	1870
Adj Flow Rate, veh/h	220	101	82	11	132	159	117	1778	27	153	1692	328
Peak Hour Factor	0.90	0.90	0.90	0.90	0.90	0.90	0.90	0.90	0.90	0.90	0.90	0.90
Percent Heavy Veh, %	2	2	2	2	2	2	2	2	2	2	2	2
Cap, veh/h	216	476	403	18	110	133	115	1878	838	165	1664	312
Arrive On Green	0.12	0.25	0.25	0.01	0.14	0.14	0.06	0.53	0.53	0.09	0.56	0.56
Sat Flow, veh/h	1781	1870	1585	1781	772	930	1781	3554	1585	1781	2986	560
Grp Volume(v), veh/h	220	101	82	11	0	291	117	1778	27	153	984	1036
Grp Sat Flow(s),veh/h/ln	1781	1870	1585	1781	0	1703	1781	1777	1585	1781	1777	1770
Q Serve(g_s), s	17.0	6.0	5.7	0.9	0.0	20.0	9.0	66.1	1.1	11.9	77.0	78.0
Cycle Q Clear(g_c), s	17.0	6.0	5.7	0.9	0.0	20.0	9.0	66.1	1.1	11.9	77.0	78.0
Prop In Lane	1.00		1.00	1.00		0.55	1.00		1.00	1.00		0.32
Lane Grp Cap(c), veh/h	216	476	403	18	0	243	115	1878	838	165	990	986
V/C Ratio(X)	1.02	0.21	0.20	0.62	0.00	1.20	1.02	0.95	0.03	0.92	0.99	1.05
Avail Cap(c_a), veh/h	216	476	403	51	0	243	115	1878	838	165	990	986
HCM Platoon Ratio	1.00	1.00	1.00	1.00	1.00	1.00	1.00	1.00	1.00	1.00	1.00	1.00
Upstream Filter(I)	1.00	1.00	1.00	1.00	0.00	1.00	0.09	0.09	0.09	1.00	1.00	1.00
Uniform Delay (d), s/veh	61.5	41.1	41.0	69.0	0.0	60.0	65.5	31.1	15.8	63.0	30.8	31.0
Incr Delay (d2), s/veh	65.7	0.2	0.2	30.5	0.0	121.2	30.9	1.4	0.0	48.6	27.2	42.9
Initial Q Delay(d3),s/veh	0.0	0.0	0.0	0.0	0.0	0.0	0.0	0.0	0.0	0.0	0.0	0.0
%ile BackOfQ(50%),veh/ln	11.6	2.8	2.3	0.5	0.0	16.8	5.1	27.8	0.4	7.6	39.1	43.7
Unsig. Movement Delay, s/veh												
LnGrp Delay(d),s/veh	127.2	41.4	41.3	99.6	0.0	181.2	96.4	32.6	15.8	111.6	58.0	73.9
LnGrp LOS	F	D	D	F	A	F	F	C	B	F	E	F
Approach Vol, veh/h		403			302			1922			2173	
Approach Delay, s/veh		88.2			178.2			36.2			69.4	
Approach LOS		F			F			D			E	

Timer - Assigned Phs	1	2	3	4	5	6	7	8
Phs Duration (G+Y+Rc), s	17.0	78.0	5.4	39.6	13.0	82.0	21.0	24.0
Change Period (Y+Rc), s	4.0	4.0	4.0	4.0	4.0	4.0	4.0	4.0
Max Green Setting (Gmax), s	13.0	74.0	4.0	33.0	9.0	78.0	17.0	20.0
Max Q Clear Time (g_c+I1), s	13.9	68.1	2.9	8.0	11.0	80.0	19.0	22.0
Green Ext Time (p_c), s	0.0	5.0	0.0	0.8	0.0	0.0	0.0	0.0

Intersection Summary	
HCM 6th Ctrl Delay	64.5
HCM 6th LOS	E

Intersection	
Int Delay, s/veh	11.7

Movement	EBL	EBT	EBR	WBL	WBT	WBR	NBL	NBT	NBR	SBL	SBT	SBR
Lane Configurations												
Traffic Vol, veh/h	5	97	11	102	166	24	11	148	110	10	124	10
Future Vol, veh/h	5	97	11	102	166	24	11	148	110	10	124	10
Conflicting Peds, #/hr	0	0	0	0	0	0	0	0	0	0	0	0
Sign Control	Stop	Stop	Stop	Stop	Stop	Stop	Free	Free	Free	Free	Free	Free
RT Channelized	-	-	None	-	-	None	-	-	None	-	-	None
Storage Length	-	-	-	-	-	-	-	-	-	-	-	-
Veh in Median Storage, #	-	0	-	-	0	-	-	0	-	-	0	-
Grade, %	-	0	-	-	0	-	-	0	-	-	0	-
Peak Hour Factor	90	90	90	90	90	90	90	90	90	90	90	90
Heavy Vehicles, %	2	2	2	2	2	2	2	2	2	2	2	2
Mvmt Flow	6	108	12	113	184	27	12	164	122	11	138	11

Major/Minor	Minor2			Minor1			Major1			Major2		
Conflicting Flow All	521	476	144	475	420	225	149	0	0	286	0	0
Stage 1	166	166	-	249	249	-	-	-	-	-	-	-
Stage 2	355	310	-	226	171	-	-	-	-	-	-	-
Critical Hdwy	7.12	6.52	6.22	7.12	6.52	6.22	4.12	-	-	4.12	-	-
Critical Hdwy Stg 1	6.12	5.52	-	6.12	5.52	-	-	-	-	-	-	-
Critical Hdwy Stg 2	6.12	5.52	-	6.12	5.52	-	-	-	-	-	-	-
Follow-up Hdwy	3.518	4.018	3.318	3.518	4.018	3.318	2.218	-	-	2.218	-	-
Pot Cap-1 Maneuver	466	488	903	500	525	814	1432	-	-	1276	-	-
Stage 1	836	761	-	755	701	-	-	-	-	-	-	-
Stage 2	662	659	-	777	757	-	-	-	-	-	-	-
Platoon blocked, %								-	-		-	-
Mov Cap-1 Maneuver	321	479	903	402	515	814	1432	-	-	1276	-	-
Mov Cap-2 Maneuver	321	479	-	402	515	-	-	-	-	-	-	-
Stage 1	828	754	-	747	694	-	-	-	-	-	-	-
Stage 2	465	652	-	651	750	-	-	-	-	-	-	-

Approach	EB	WB	NB	SB
HCM Control Delay, s	14.8	26.5	0.3	0.5
HCM LOS	B	D		

Minor Lane/Major Mvmt	NBL	NBT	NBR	EBLn1	WBLn1	SBL	SBT	SBR
Capacity (veh/h)	1432	-	-	491	482	1276	-	-
HCM Lane V/C Ratio	0.009	-	-	0.256	0.673	0.009	-	-
HCM Control Delay (s)	7.5	0	-	14.8	26.5	7.8	0	-
HCM Lane LOS	A	A	-	B	D	A	A	-
HCM 95th %tile Q(veh)	0	-	-	1	4.9	0	-	-

Intersection	
Int Delay, s/veh	1.6

Movement	EBL	EBT	WBT	WBR	SBL	SBR
Lane Configurations						
Traffic Vol, veh/h	25	191	278	80	40	19
Future Vol, veh/h	25	191	278	80	40	19
Conflicting Peds, #/hr	0	0	0	0	0	0
Sign Control	Free	Free	Free	Free	Stop	Stop
RT Channelized	-	None	-	None	-	None
Storage Length	-	-	-	-	0	-
Veh in Median Storage, #	-	0	0	-	0	-
Grade, %	-	0	0	-	0	-
Peak Hour Factor	90	90	90	90	90	90
Heavy Vehicles, %	2	2	2	2	2	2
Mvmt Flow	28	212	309	89	44	21

Major/Minor	Major1		Major2		Minor2	
Conflicting Flow All	398	0	-	0	622	354
Stage 1	-	-	-	-	354	-
Stage 2	-	-	-	-	268	-
Critical Hdwy	4.12	-	-	-	6.42	6.22
Critical Hdwy Stg 1	-	-	-	-	5.42	-
Critical Hdwy Stg 2	-	-	-	-	5.42	-
Follow-up Hdwy	2.218	-	-	-	3.518	3.318
Pot Cap-1 Maneuver	1161	-	-	-	450	690
Stage 1	-	-	-	-	710	-
Stage 2	-	-	-	-	777	-
Platoon blocked, %		-	-	-		
Mov Cap-1 Maneuver	1161	-	-	-	438	690
Mov Cap-2 Maneuver	-	-	-	-	438	-
Stage 1	-	-	-	-	691	-
Stage 2	-	-	-	-	777	-

Approach	EB	WB	SB
HCM Control Delay, s	0.9	0	13.4
HCM LOS			B

Minor Lane/Major Mvmt	EBL	EBT	WBT	WBR	SBLn1
Capacity (veh/h)	1161	-	-	-	496
HCM Lane V/C Ratio	0.024	-	-	-	0.132
HCM Control Delay (s)	8.2	0	-	-	13.4
HCM Lane LOS	A	A	-	-	B
HCM 95th %tile Q(veh)	0.1	-	-	-	0.5

Intersection	
Int Delay, s/veh	4

Movement	EBL	EBT	EBR	WBL	WBT	WBR	NBL	NBT	NBR	SBL	SBT	SBR
Lane Configurations												
Traffic Vol, veh/h	11	215	2	106	343	28	4	6	85	38	4	11
Future Vol, veh/h	11	215	2	106	343	28	4	6	85	38	4	11
Conflicting Peds, #/hr	0	0	0	0	0	0	0	0	0	0	0	0
Sign Control	Free	Free	Free	Free	Free	Free	Stop	Stop	Stop	Stop	Stop	Stop
RT Channelized	-	-	None	-	-	None	-	-	None	-	-	None
Storage Length	55	-	-	75	-	0	-	-	-	-	-	-
Veh in Median Storage, #	-	0	-	-	0	-	-	0	-	-	0	-
Grade, %	-	0	-	-	0	-	-	0	-	-	0	-
Peak Hour Factor	90	90	90	90	90	90	90	90	90	90	90	90
Heavy Vehicles, %	2	2	2	2	2	2	2	2	2	2	2	2
Mvmt Flow	12	239	2	118	381	31	4	7	94	42	4	12

Major/Minor	Major1			Major2			Minor1			Minor2		
Conflicting Flow All	412	0	0	241	0	0	905	912	240	932	882	381
Stage 1	-	-	-	-	-	-	264	264	-	617	617	-
Stage 2	-	-	-	-	-	-	641	648	-	315	265	-
Critical Hdwy	4.12	-	-	4.12	-	-	7.12	6.52	6.22	7.12	6.52	6.22
Critical Hdwy Stg 1	-	-	-	-	-	-	6.12	5.52	-	6.12	5.52	-
Critical Hdwy Stg 2	-	-	-	-	-	-	6.12	5.52	-	6.12	5.52	-
Follow-up Hdwy	2.218	-	-	2.218	-	-	3.518	4.018	3.318	3.518	4.018	3.318
Pot Cap-1 Maneuver	1147	-	-	1326	-	-	257	274	799	247	285	666
Stage 1	-	-	-	-	-	-	741	690	-	477	481	-
Stage 2	-	-	-	-	-	-	463	466	-	696	689	-
Platoon blocked, %		-	-		-	-						
Mov Cap-1 Maneuver	1147	-	-	1326	-	-	230	247	799	197	257	666
Mov Cap-2 Maneuver	-	-	-	-	-	-	230	247	-	197	257	-
Stage 1	-	-	-	-	-	-	734	683	-	472	438	-
Stage 2	-	-	-	-	-	-	410	425	-	601	682	-

Approach	EB	WB	NB	SB
HCM Control Delay, s	0.4	1.8	11.7	25.3
HCM LOS			B	D

Minor Lane/Major Mvmt	NBLn1	EBL	EBT	EBR	WBL	WBT	WBR	SBLn1
Capacity (veh/h)	642	1147	-	-	1326	-	-	236
HCM Lane V/C Ratio	0.164	0.011	-	-	0.089	-	-	0.25
HCM Control Delay (s)	11.7	8.2	-	-	8	-	-	25.3
HCM Lane LOS	B	A	-	-	A	-	-	D
HCM 95th %tile Q(veh)	0.6	0	-	-	0.3	-	-	1

Movement	EBL	EBT	EBR	WBL	WBT	WBR	NBL	NBT	NBR	SBL	SBT	SBR
Lane Configurations												
Traffic Volume (veh/h)	125	142	85	41	172	317	135	1259	68	338	1121	181
Future Volume (veh/h)	125	142	85	41	172	317	135	1259	68	338	1121	181
Initial Q (Qb), veh	0	0	0	0	0	0	0	0	0	0	0	0
Ped-Bike Adj(A_pbT)	1.00		1.00	1.00		1.00	1.00		1.00	1.00		1.00
Parking Bus, Adj	1.00	1.00	1.00	1.00	1.00	1.00	1.00	1.00	1.00	1.00	1.00	1.00
Work Zone On Approach		No			No			No			No	
Adj Sat Flow, veh/h/ln	1870	1870	1870	1870	1870	1870	1870	1870	1870	1870	1870	1870
Adj Flow Rate, veh/h	139	158	94	46	191	352	150	1399	76	376	1246	201
Peak Hour Factor	0.90	0.90	0.90	0.90	0.90	0.90	0.90	0.90	0.90	0.90	0.90	0.90
Percent Heavy Veh, %	2	2	2	2	2	2	2	2	2	2	2	2
Cap, veh/h	96	574	486	370	181	333	166	1280	69	285	1564	697
Arrive On Green	0.31	0.31	0.31	0.31	0.31	0.31	0.09	0.37	0.37	0.16	0.44	0.44
Sat Flow, veh/h	863	1870	1585	1128	589	1086	1781	3428	186	1781	3554	1585
Grp Volume(v), veh/h	139	158	94	46	0	543	150	723	752	376	1246	201
Grp Sat Flow(s),veh/h/ln	863	1870	1585	1128	0	1675	1781	1777	1837	1781	1777	1585
Q Serve(g_s), s	0.0	4.8	3.3	2.4	0.0	23.0	6.3	28.0	28.0	12.0	22.7	6.1
Cycle Q Clear(g_c), s	23.0	4.8	3.3	7.2	0.0	23.0	6.3	28.0	28.0	12.0	22.7	6.1
Prop In Lane	1.00		1.00	1.00		0.65	1.00		0.10	1.00		1.00
Lane Grp Cap(c), veh/h	96	574	486	370	0	514	166	663	686	285	1564	697
V/C Ratio(X)	1.45	0.28	0.19	0.12	0.00	1.06	0.90	1.09	1.10	1.32	0.80	0.29
Avail Cap(c_a), veh/h	96	574	486	370	0	514	166	663	686	285	1564	697
HCM Platoon Ratio	1.00	1.00	1.00	1.00	1.00	1.00	1.00	1.00	1.00	1.00	1.00	1.00
Upstream Filter(I)	1.00	1.00	1.00	1.00	0.00	1.00	1.00	1.00	1.00	0.09	0.09	0.09
Uniform Delay (d), s/veh	37.5	19.7	19.2	22.4	0.0	26.0	33.7	23.5	23.5	31.5	18.1	13.5
Incr Delay (d2), s/veh	250.4	0.3	0.2	0.1	0.0	55.7	42.9	62.2	63.5	146.0	0.4	0.1
Initial Q Delay(d3),s/veh	0.0	0.0	0.0	0.0	0.0	0.0	0.0	0.0	0.0	0.0	0.0	0.0
%ile BackOfQ(50%),veh/ln	8.4	2.0	1.2	0.6	0.0	16.5	4.6	22.2	23.2	16.5	8.5	2.0
Unsig. Movement Delay, s/veh												
LnGrp Delay(d),s/veh	287.9	19.9	19.4	22.6	0.0	81.7	76.5	85.7	87.0	177.5	18.5	13.6
LnGrp LOS	F	B	B	C	A	F	E	F	F	F	B	B
Approach Vol, veh/h		391			589			1625			1823	
Approach Delay, s/veh		115.0			77.1			85.5			50.8	
Approach LOS		F			E			F			D	

Timer - Assigned Phs	1	2		4	5	6		8
Phs Duration (G+Y+Rc), s	16.0	32.0		27.0	11.0	37.0		27.0
Change Period (Y+Rc), s	4.0	4.0		4.0	4.0	4.0		4.0
Max Green Setting (Gmax), s	12.0	28.0		23.0	7.0	33.0		23.0
Max Q Clear Time (g_c+I1), s	14.0	30.0		25.0	8.3	24.7		25.0
Green Ext Time (p_c), s	0.0	0.0		0.0	0.0	5.5		0.0

Intersection Summary	
HCM 6th Ctrl Delay	72.7
HCM 6th LOS	E

Intersection	
Int Delay, s/veh	0.3

Movement	EBL	EBR	NBL	NBT	SBT	SBR
Lane Configurations						
Traffic Vol, veh/h	11	0	1	252	185	18
Future Vol, veh/h	11	0	1	252	185	18
Conflicting Peds, #/hr	0	0	0	0	0	0
Sign Control	Stop	Stop	Free	Free	Free	Free
RT Channelized	-	None	-	None	-	None
Storage Length	0	-	0	-	-	-
Veh in Median Storage, #	0	-	-	0	0	-
Grade, %	0	-	-	0	0	-
Peak Hour Factor	90	90	90	90	90	90
Heavy Vehicles, %	2	2	2	2	2	2
Mvmt Flow	12	0	1	280	206	20

Major/Minor	Minor2		Major1		Major2	
Conflicting Flow All	498	216	226	0	-	0
Stage 1	216	-	-	-	-	-
Stage 2	282	-	-	-	-	-
Critical Hdwy	6.42	6.22	4.12	-	-	-
Critical Hdwy Stg 1	5.42	-	-	-	-	-
Critical Hdwy Stg 2	5.42	-	-	-	-	-
Follow-up Hdwy	3.518	3.318	2.218	-	-	-
Pot Cap-1 Maneuver	532	824	1342	-	-	-
Stage 1	820	-	-	-	-	-
Stage 2	766	-	-	-	-	-
Platoon blocked, %				-	-	-
Mov Cap-1 Maneuver	531	824	1342	-	-	-
Mov Cap-2 Maneuver	531	-	-	-	-	-
Stage 1	819	-	-	-	-	-
Stage 2	766	-	-	-	-	-

Approach	EB	NB	SB
HCM Control Delay, s	11.9	0	0
HCM LOS	B		

Minor Lane/Major Mvmt	NBL	NBT	EBLn1	SBT	SBR
Capacity (veh/h)	1342	-	531	-	-
HCM Lane V/C Ratio	0.001	-	0.023	-	-
HCM Control Delay (s)	7.7	-	11.9	-	-
HCM Lane LOS	A	-	B	-	-
HCM 95th %tile Q(veh)	0	-	0.1	-	-

Intersection	
Int Delay, s/veh	7.6

Movement	EBL	EBT	EBR	WBL	WBT	WBR	NBL	NBT	NBR	SBL	SBT	SBR
Lane Configurations												
Traffic Vol, veh/h	1	87	0	13	149	57	0	129	13	64	109	0
Future Vol, veh/h	1	87	0	13	149	57	0	129	13	64	109	0
Conflicting Peds, #/hr	0	0	0	0	0	0	0	0	0	0	0	0
Sign Control	Free	Free	Free	Free	Free	Free	Stop	Stop	Stop	Stop	Stop	Stop
RT Channelized	-	-	None	-	-	None	-	-	None	-	-	None
Storage Length	-	-	-	-	-	-	-	-	-	-	-	-
Veh in Median Storage, #	-	0	-	-	0	-	-	0	-	-	0	-
Grade, %	-	0	-	-	0	-	-	0	-	-	0	-
Peak Hour Factor	90	90	90	90	90	90	90	90	90	90	90	90
Heavy Vehicles, %	2	2	2	2	2	2	2	2	2	2	2	2
Mvmt Flow	1	97	0	14	166	63	0	143	14	71	121	0

Major/Minor	Major1			Major2			Minor1			Minor2		
Conflicting Flow All	229	0	0	97	0	0	385	356	97	404	325	198
Stage 1	-	-	-	-	-	-	99	99	-	226	226	-
Stage 2	-	-	-	-	-	-	286	257	-	178	99	-
Critical Hdwy	4.12	-	-	4.12	-	-	7.12	6.52	6.22	7.12	6.52	6.22
Critical Hdwy Stg 1	-	-	-	-	-	-	6.12	5.52	-	6.12	5.52	-
Critical Hdwy Stg 2	-	-	-	-	-	-	6.12	5.52	-	6.12	5.52	-
Follow-up Hdwy	2.218	-	-	2.218	-	-	3.518	4.018	3.318	3.518	4.018	3.318
Pot Cap-1 Maneuver	1339	-	-	1496	-	-	573	570	959	557	593	843
Stage 1	-	-	-	-	-	-	907	813	-	777	717	-
Stage 2	-	-	-	-	-	-	721	695	-	824	813	-
Platoon blocked, %		-	-		-	-						
Mov Cap-1 Maneuver	1339	-	-	1496	-	-	478	563	959	437	586	843
Mov Cap-2 Maneuver	-	-	-	-	-	-	478	563	-	437	586	-
Stage 1	-	-	-	-	-	-	906	812	-	776	709	-
Stage 2	-	-	-	-	-	-	591	687	-	668	812	-

Approach	EB	WB	NB	SB
HCM Control Delay, s	0.1	0.4	13.4	15.9
HCM LOS			B	C

Minor Lane/Major Mvmt	NBLn1	EBL	EBT	EBR	WBL	WBT	WBR	SBLn1
Capacity (veh/h)	585	1339	-	-	1496	-	-	520
HCM Lane V/C Ratio	0.27	0.001	-	-	0.01	-	-	0.37
HCM Control Delay (s)	13.4	7.7	0	-	7.4	0	-	15.9
HCM Lane LOS	B	A	A	-	A	A	-	C
HCM 95th %tile Q(veh)	1.1	0	-	-	0	-	-	1.7

Intersection	
Int Delay, s/veh	3.9

Movement	WBL	WBR	NBT	NBR	SBL	SBT
Lane Configurations						
Traffic Vol, veh/h	34	94	177	29	80	124
Future Vol, veh/h	34	94	177	29	80	124
Conflicting Peds, #/hr	0	0	0	0	0	0
Sign Control	Stop	Stop	Free	Free	Free	Free
RT Channelized	-	None	-	None	-	None
Storage Length	0	-	-	-	0	-
Veh in Median Storage, #	0	-	0	-	-	0
Grade, %	0	-	0	-	-	0
Peak Hour Factor	90	90	90	90	90	90
Heavy Vehicles, %	2	2	2	2	2	2
Mvmt Flow	38	104	197	32	89	138

Major/Minor	Minor1		Major1		Major2	
Conflicting Flow All	529	213	0	0	229	0
Stage 1	213	-	-	-	-	-
Stage 2	316	-	-	-	-	-
Critical Hdwy	6.42	6.22	-	-	4.12	-
Critical Hdwy Stg 1	5.42	-	-	-	-	-
Critical Hdwy Stg 2	5.42	-	-	-	-	-
Follow-up Hdwy	3.518	3.318	-	-	2.218	-
Pot Cap-1 Maneuver	510	827	-	-	1339	-
Stage 1	823	-	-	-	-	-
Stage 2	739	-	-	-	-	-
Platoon blocked, %			-	-		-
Mov Cap-1 Maneuver	476	827	-	-	1339	-
Mov Cap-2 Maneuver	476	-	-	-	-	-
Stage 1	769	-	-	-	-	-
Stage 2	739	-	-	-	-	-

Approach	WB	NB	SB
HCM Control Delay, s	11.5	0	3.1
HCM LOS	B		

Minor Lane/Major Mvmt	NBT	NBR	WBLn1	SBL	SBT
Capacity (veh/h)	-	-	692	1339	-
HCM Lane V/C Ratio	-	-	0.206	0.066	-
HCM Control Delay (s)	-	-	11.5	7.9	-
HCM Lane LOS	-	-	B	A	-
HCM 95th %tile Q(veh)	-	-	0.8	0.2	-

Intersection	
Int Delay, s/veh	1.6

Movement	WBL	WBR	NBT	NBR	SBL	SBT
Lane Configurations						
Traffic Vol, veh/h	17	26	180	15	22	136
Future Vol, veh/h	17	26	180	15	22	136
Conflicting Peds, #/hr	0	0	0	0	0	0
Sign Control	Stop	Stop	Free	Free	Free	Free
RT Channelized	-	None	-	None	-	None
Storage Length	0	-	-	-	-	-
Veh in Median Storage, #	0	-	0	-	-	0
Grade, %	0	-	0	-	-	0
Peak Hour Factor	90	90	90	90	90	90
Heavy Vehicles, %	2	2	2	2	2	2
Mvmt Flow	19	29	200	17	24	151

Major/Minor	Minor1		Major1		Major2	
Conflicting Flow All	408	209	0	0	217	0
Stage 1	209	-	-	-	-	-
Stage 2	199	-	-	-	-	-
Critical Hdwy	6.42	6.22	-	-	4.12	-
Critical Hdwy Stg 1	5.42	-	-	-	-	-
Critical Hdwy Stg 2	5.42	-	-	-	-	-
Follow-up Hdwy	3.518	3.318	-	-	2.218	-
Pot Cap-1 Maneuver	599	831	-	-	1353	-
Stage 1	826	-	-	-	-	-
Stage 2	835	-	-	-	-	-
Platoon blocked, %			-	-		-
Mov Cap-1 Maneuver	588	831	-	-	1353	-
Mov Cap-2 Maneuver	588	-	-	-	-	-
Stage 1	810	-	-	-	-	-
Stage 2	835	-	-	-	-	-

Approach	WB	NB	SB
HCM Control Delay, s	10.4	0	1.1
HCM LOS	B		

Minor Lane/Major Mvmt	NBT	NBR	WBLn1	SBL	SBT
Capacity (veh/h)	-	-	714	1353	-
HCM Lane V/C Ratio	-	-	0.067	0.018	-
HCM Control Delay (s)	-	-	10.4	7.7	0
HCM Lane LOS	-	-	B	A	A
HCM 95th %tile Q(veh)	-	-	0.2	0.1	-

HCM 6th Signalized Intersection Summary
1: US-395 & Dos Palmas Rd.

07/18/2019

Movement	EBL	EBT	EBR	WBL	WBT	WBR	NBL	NBT	NBR	SBL	SBT	SBR
Lane Configurations												
Traffic Volume (veh/h)	320	135	104	49	77	250	37	1373	25	151	1211	187
Future Volume (veh/h)	320	135	104	49	77	250	37	1373	25	151	1211	187
Initial Q (Qb), veh	0	0	0	0	0	0	0	0	0	0	0	0
Ped-Bike Adj(A_pbT)	1.00		1.00	1.00		1.00	1.00		1.00	1.00		1.00
Parking Bus, Adj	1.00	1.00	1.00	1.00	1.00	1.00	1.00	1.00	1.00	1.00	1.00	1.00
Work Zone On Approach		No			No			No			No	
Adj Sat Flow, veh/h/ln	1870	1870	1870	1870	1870	1870	1870	1870	1870	1870	1870	1870
Adj Flow Rate, veh/h	356	150	116	54	86	278	41	1526	28	168	1346	208
Peak Hour Factor	0.90	0.90	0.90	0.90	0.90	0.90	0.90	0.90	0.90	0.90	0.90	0.90
Percent Heavy Veh, %	2	2	2	2	2	2	2	2	2	2	2	2
Cap, veh/h	356	573	486	70	272	231	52	1486	663	162	1482	227
Arrive On Green	0.20	0.31	0.31	0.04	0.15	0.15	0.03	0.42	0.42	0.09	0.48	0.48
Sat Flow, veh/h	1781	1870	1585	1781	1870	1585	1781	3554	1585	1781	3089	473
Grp Volume(v), veh/h	356	150	116	54	86	278	41	1526	28	168	769	785
Grp Sat Flow(s),veh/h/ln	1781	1870	1585	1781	1870	1585	1781	1777	1585	1781	1777	1785
Q Serve(g_s), s	22.0	6.7	6.0	3.3	4.5	16.0	2.5	46.0	1.2	10.0	43.6	44.9
Cycle Q Clear(g_c), s	22.0	6.7	6.0	3.3	4.5	16.0	2.5	46.0	1.2	10.0	43.6	44.9
Prop In Lane	1.00		1.00	1.00		1.00	1.00		1.00	1.00		0.26
Lane Grp Cap(c), veh/h	356	573	486	70	272	231	52	1486	663	162	852	857
V/C Ratio(X)	1.00	0.26	0.24	0.78	0.32	1.21	0.78	1.03	0.04	1.04	0.90	0.92
Avail Cap(c_a), veh/h	356	573	486	130	272	231	65	1486	663	162	852	857
HCM Platoon Ratio	1.00	1.00	1.00	1.00	1.00	1.00	1.00	1.00	1.00	1.00	1.00	1.00
Upstream Filter(I)	1.00	1.00	1.00	1.00	1.00	1.00	0.09	0.09	0.09	1.00	1.00	1.00
Uniform Delay (d), s/veh	44.0	28.8	28.6	52.4	42.1	47.0	53.0	32.0	19.0	50.0	26.2	26.6
Incr Delay (d2), s/veh	47.5	0.2	0.3	16.6	0.7	126.2	4.6	15.4	0.0	81.0	14.6	16.2
Initial Q Delay(d3),s/veh	0.0	0.0	0.0	0.0	0.0	0.0	0.0	0.0	0.0	0.0	0.0	0.0
%ile BackOfQ(50%),veh/ln	14.3	3.0	0.0	1.8	2.1	14.3	1.2	22.2	0.4	8.1	21.1	22.1
Unsig. Movement Delay, s/veh												
LnGrp Delay(d),s/veh	91.5	29.0	28.8	68.9	42.8	173.2	57.6	47.4	19.0	131.0	40.8	42.7
LnGrp LOS	F	C	C	E	D	F	E	F	B	F	D	D
Approach Vol, veh/h		622			418			1595			1722	
Approach Delay, s/veh		64.7			132.9			47.1			50.5	
Approach LOS		E			F			D			D	

Timer - Assigned Phs	1	2	3	4	5	6	7	8
Phs Duration (G+Y+Rc), s	14.0	50.0	8.3	37.7	7.2	56.8	26.0	20.0
Change Period (Y+Rc), s	4.0	4.0	4.0	4.0	4.0	4.0	4.0	4.0
Max Green Setting (Gmax), s	10.0	46.0	8.0	30.0	4.0	52.0	22.0	16.0
Max Q Clear Time (g_c+I1), s	12.0	48.0	5.3	8.7	4.5	46.9	24.0	18.0
Green Ext Time (p_c), s	0.0	0.0	0.0	1.2	0.0	3.9	0.0	0.0

Intersection Summary	
HCM 6th Ctrl Delay	59.2
HCM 6th LOS	E

Intersection	
Intersection Delay, s/veh	14.7
Intersection LOS	B

Movement	EBL	EBT	EBR	WBL	WBT	WBR	NBL	NBT	NBR	SBL	SBT	SBR
Lane Configurations												
Traffic Vol, veh/h	7	163	4	134	61	13	8	169	185	26	187	8
Future Vol, veh/h	7	163	4	134	61	13	8	169	185	26	187	8
Peak Hour Factor	0.90	0.90	0.90	0.90	0.90	0.90	0.90	0.90	0.90	0.90	0.90	0.90
Heavy Vehicles, %	2	2	2	2	2	2	2	2	2	2	2	2
Mvmt Flow	8	181	4	149	68	14	9	188	206	29	208	9
Number of Lanes	0	1	0	0	1	0	0	1	0	0	1	0

Approach	EB	WB	NB	SB
Opposing Approach	WB	EB	SB	NB
Opposing Lanes	1	1	1	1
Conflicting Approach Left	SB	NB	EB	WB
Conflicting Lanes Left	1	1	1	1
Conflicting Approach Righ	NB	SB	WB	EB
Conflicting Lanes Right	1	1	1	1
HCM Control Delay	12.7	13.7	17.1	13.3
HCM LOS	B	B	C	B

Lane	NBLn1	EBLn1	WBLn1	SBLn1
Vol Left, %	2%	4%	64%	12%
Vol Thru, %	47%	94%	29%	85%
Vol Right, %	51%	2%	6%	4%
Sign Control	Stop	Stop	Stop	Stop
Traffic Vol by Lane	362	174	208	221
LT Vol	8	7	134	26
Through Vol	169	163	61	187
RT Vol	185	4	13	8
Lane Flow Rate	402	193	231	246
Geometry Grp	1	1	1	1
Degree of Util (X)	0.618	0.341	0.407	0.413
Departure Headway (Hd)	5.531	6.344	6.344	6.061
Convergence, Y/N	Yes	Yes	Yes	Yes
Cap	656	566	566	594
Service Time	3.531	4.395	4.393	4.105
HCM Lane V/C Ratio	0.613	0.341	0.408	0.414
HCM Control Delay	17.1	12.7	13.7	13.3
HCM Lane LOS	C	B	B	B
HCM 95th-tile Q	4.3	1.5	2	2

Intersection	
Intersection Delay, s/veh	20.6
Intersection LOS	C

Movement	EBL	EBT	EBR	WBL	WBT	WBR	NBL	NBT	NBR	SBL	SBT	SBR
Lane Configurations												
Traffic Vol, veh/h	22	339	5	66	277	16	47	8	110	65	60	51
Future Vol, veh/h	22	339	5	66	277	16	47	8	110	65	60	51
Peak Hour Factor	0.90	0.90	0.90	0.90	0.90	0.90	0.90	0.90	0.90	0.90	0.90	0.90
Heavy Vehicles, %	2	2	2	2	2	2	2	2	2	2	2	2
Mvmt Flow	24	377	6	73	308	18	52	9	122	72	67	57
Number of Lanes	1	1	0	1	1	1	0	1	0	0	1	0

Approach	EB	WB	NB	SB
Opposing Approach	WB	EB	SB	NB
Opposing Lanes	3	2	1	1
Conflicting Approach Left	SB	NB	EB	WB
Conflicting Lanes Left	1	1	2	3
Conflicting Approach Righ	NB	SB	WB	EB
Conflicting Lanes Right	1	1	3	2
HCM Control Delay	29.3	17	14.4	15.5
HCM LOS	D	C	B	C

Lane	NBLn1	EBLn1	EBLn2	WBLn1	WBLn2	WBLn3	SBLn1
Vol Left, %	28%	100%	0%	100%	0%	0%	37%
Vol Thru, %	5%	0%	99%	0%	100%	0%	34%
Vol Right, %	67%	0%	1%	0%	0%	100%	29%
Sign Control	Stop	Stop	Stop	Stop	Stop	Stop	Stop
Traffic Vol by Lane	165	22	344	66	277	16	176
LT Vol	47	22	0	66	0	0	65
Through Vol	8	0	339	0	277	0	60
RT Vol	110	0	5	0	0	16	51
Lane Flow Rate	183	24	382	73	308	18	196
Geometry Grp	7	8	8	7	7	7	7
Degree of Util (X)	0.372	0.053	0.77	0.15	0.584	0.03	0.41
Departure Headway (Hd)	7.301	7.781	7.257	7.348	6.835	6.118	7.551
Convergence, Y/N	Yes	Yes	Yes	Yes	Yes	Yes	Yes
Cap	491	460	497	487	526	583	475
Service Time	5.064	5.541	5.017	5.107	4.594	3.876	5.313
HCM Lane V/C Ratio	0.373	0.052	0.769	0.15	0.586	0.031	0.413
HCM Control Delay	14.4	11	30.5	11.4	18.8	9.1	15.5
HCM Lane LOS	B	B	D	B	C	A	C
HCM 95th-tile Q	1.7	0.2	6.8	0.5	3.7	0.1	2

HCM 6th Signalized Intersection Summary
1: US-395 & Dos Palmas Rd.

07/18/2019

Movement	EBL	EBT	EBR	WBL	WBT	WBR	NBL	NBT	NBR	SBL	SBT	SBR
Lane Configurations												
Traffic Volume (veh/h)	198	91	74	10	119	143	105	1600	24	138	1523	295
Future Volume (veh/h)	198	91	74	10	119	143	105	1600	24	138	1523	295
Initial Q (Qb), veh	0	0	0	0	0	0	0	0	0	0	0	0
Ped-Bike Adj(A_pbT)	1.00		1.00	1.00		1.00	1.00		1.00	1.00		1.00
Parking Bus, Adj	1.00	1.00	1.00	1.00	1.00	1.00	1.00	1.00	1.00	1.00	1.00	1.00
Work Zone On Approach		No			No			No			No	
Adj Sat Flow, veh/h/ln	1870	1870	1870	1870	1870	1870	1870	1870	1870	1870	1870	1870
Adj Flow Rate, veh/h	220	101	82	11	132	159	117	1778	27	153	1692	328
Peak Hour Factor	0.90	0.90	0.90	0.90	0.90	0.90	0.90	0.90	0.90	0.90	0.90	0.90
Percent Heavy Veh, %	2	2	2	2	2	2	2	2	2	2	2	2
Cap, veh/h	216	420	356	18	212	180	115	1983	885	165	1752	329
Arrive On Green	0.12	0.22	0.22	0.01	0.11	0.11	0.06	0.56	0.56	0.09	0.59	0.59
Sat Flow, veh/h	1781	1870	1585	1781	1870	1585	1781	3554	1585	1781	2986	560
Grp Volume(v), veh/h	220	101	82	11	132	159	117	1778	27	153	984	1036
Grp Sat Flow(s),veh/h/ln	1781	1870	1585	1781	1870	1585	1781	1777	1585	1781	1777	1770
Q Serve(g_s), s	17.0	6.2	5.9	0.9	9.4	13.8	9.0	61.9	1.1	11.9	71.8	81.7
Cycle Q Clear(g_c), s	17.0	6.2	5.9	0.9	9.4	13.8	9.0	61.9	1.1	11.9	71.8	81.7
Prop In Lane	1.00		1.00	1.00		1.00	1.00		1.00	1.00		0.32
Lane Grp Cap(c), veh/h	216	420	356	18	212	180	115	1983	885	165	1042	1038
V/C Ratio(X)	1.02	0.24	0.23	0.62	0.62	0.89	1.02	0.90	0.03	0.92	0.94	1.00
Avail Cap(c_a), veh/h	216	420	356	51	214	181	115	1983	885	165	1042	1038
HCM Platoon Ratio	1.00	1.00	1.00	1.00	1.00	1.00	1.00	1.00	1.00	1.00	1.00	1.00
Upstream Filter(I)	1.00	1.00	1.00	1.00	1.00	1.00	0.27	0.27	0.27	1.00	1.00	1.00
Uniform Delay (d), s/veh	61.5	44.5	44.4	69.0	59.2	61.2	65.5	27.4	13.9	63.0	26.8	28.8
Incr Delay (d2), s/veh	65.7	0.3	0.3	30.5	5.4	36.6	49.3	2.0	0.0	48.6	17.3	27.4
Initial Q Delay(d3),s/veh	0.0	0.0	0.0	0.0	0.0	0.0	0.0	0.0	0.0	0.0	0.0	0.0
%ile BackOfQ(50%),veh/ln	11.6	2.9	2.4	0.5	4.8	7.4	5.7	26.0	0.4	7.6	34.1	40.9
Unsig. Movement Delay, s/veh												
LnGrp Delay(d),s/veh	127.2	44.8	44.7	99.6	64.7	97.8	114.8	29.4	13.9	111.6	44.1	56.3
LnGrp LOS	F	D	D	F	E	F	F	C	B	F	D	E
Approach Vol, veh/h		403			302			1922			2173	
Approach Delay, s/veh		89.7			83.4			34.4			54.6	
Approach LOS		F			F			C			D	

Timer - Assigned Phs	1	2	3	4	5	6	7	8
Phs Duration (G+Y+Rc), s	17.0	82.1	5.4	35.5	13.0	86.1	21.0	19.9
Change Period (Y+Rc), s	4.0	4.0	4.0	4.0	4.0	4.0	4.0	4.0
Max Green Setting (Gmax), s	13.0	78.0	4.0	29.0	9.0	82.0	17.0	16.0
Max Q Clear Time (g_c+I1), s	13.9	63.9	2.9	8.2	11.0	83.7	19.0	15.8
Green Ext Time (p_c), s	0.0	10.6	0.0	0.7	0.0	0.0	0.0	0.0

Intersection Summary	
HCM 6th Ctrl Delay	51.3
HCM 6th LOS	D

Movement	EBL	EBT	EBR	WBL	WBT	WBR	NBL	NBT	NBR	SBL	SBT	SBR
Lane Configurations												
Traffic Volume (veh/h)	125	142	85	41	172	317	135	1259	68	338	1121	181
Future Volume (veh/h)	125	142	85	41	172	317	135	1259	68	338	1121	181
Initial Q (Qb), veh	0	0	0	0	0	0	0	0	0	0	0	0
Ped-Bike Adj(A_pbT)	1.00		1.00	1.00		1.00	1.00		1.00	1.00		1.00
Parking Bus, Adj	1.00	1.00	1.00	1.00	1.00	1.00	1.00	1.00	1.00	1.00	1.00	1.00
Work Zone On Approach		No			No			No			No	
Adj Sat Flow, veh/h/ln	1870	1870	1870	1870	1870	1870	1870	1870	1870	1870	1870	1870
Adj Flow Rate, veh/h	139	158	94	46	191	352	150	1399	76	376	1246	201
Peak Hour Factor	0.90	0.90	0.90	0.90	0.90	0.90	0.90	0.90	0.90	0.90	0.90	0.90
Percent Heavy Veh, %	2	2	2	2	2	2	2	2	2	2	2	2
Cap, veh/h	203	399	338	255	399	338	187	1417	77	380	1854	827
Arrive On Green	0.21	0.21	0.21	0.21	0.21	0.21	0.11	0.41	0.41	0.21	0.52	0.52
Sat Flow, veh/h	863	1870	1585	1128	1870	1585	1781	3428	186	1781	3554	1585
Grp Volume(v), veh/h	139	158	94	46	191	352	150	723	752	376	1246	201
Grp Sat Flow(s),veh/h/ln	863	1870	1585	1128	1870	1585	1781	1777	1837	1781	1777	1585
Q Serve(g_s), s	9.3	5.4	3.7	2.7	6.7	16.0	6.2	30.2	30.5	15.8	19.4	5.2
Cycle Q Clear(g_c), s	16.0	5.4	3.7	8.2	6.7	16.0	6.2	30.2	30.5	15.8	19.4	5.2
Prop In Lane	1.00		1.00	1.00		1.00	1.00		0.10	1.00		1.00
Lane Grp Cap(c), veh/h	203	399	338	255	399	338	187	734	759	380	1854	827
V/C Ratio(X)	0.69	0.40	0.28	0.18	0.48	1.04	0.80	0.99	0.99	0.99	0.67	0.24
Avail Cap(c_a), veh/h	203	399	338	255	399	338	238	734	759	380	1854	827
HCM Platoon Ratio	1.00	1.00	1.00	1.00	1.00	1.00	1.00	1.00	1.00	1.00	1.00	1.00
Upstream Filter(I)	1.00	1.00	1.00	1.00	1.00	1.00	1.00	1.00	1.00	0.19	0.19	0.19
Uniform Delay (d), s/veh	33.9	25.3	24.7	28.9	25.8	29.5	32.8	21.8	21.8	29.4	13.2	9.8
Incr Delay (d2), s/veh	9.2	0.6	0.4	0.3	0.9	60.0	14.2	29.8	30.3	17.6	0.4	0.1
Initial Q Delay(d3),s/veh	0.0	0.0	0.0	0.0	0.0	0.0	0.0	0.0	0.0	0.0	0.0	0.0
%ile BackOfQ(50%),veh/ln	8.0	2.4	1.4	0.7	3.0	11.4	3.3	17.4	18.2	8.3	6.9	1.7
Unsig. Movement Delay, s/veh												
LnGrp Delay(d),s/veh	43.1	26.0	25.1	29.2	26.7	89.5	47.0	51.5	52.1	47.0	13.6	10.0
LnGrp LOS	D	C	C	C	C	F	D	D	D	D	B	A
Approach Vol, veh/h		391			589			1625			1823	
Approach Delay, s/veh		31.9			64.4			51.4			20.1	
Approach LOS		C			E			D			C	

Timer - Assigned Phs	1	2		4	5	6		8
Phs Duration (G+Y+Rc), s	30.0	35.0		20.0	11.9	43.1		20.0
Change Period (Y+Rc), s	4.0	4.0		4.0	4.0	4.0		4.0
Max Green Setting (Gmax), s	16.0	31.0		16.0	10.0	37.0		16.0
Max Q Clear Time (g_c+I1), s	17.8	32.5		18.0	8.2	21.4		18.0
Green Ext Time (p_c), s	0.0	0.0		0.0	0.1	8.8		0.0

Intersection Summary	
HCM 6th Ctrl Delay	38.5
HCM 6th LOS	D