# STANDARD SPECIFICATIONS FOR PUBLIC IMPROVEMENTS

CITY OF VICTORVILLE
INCORPORATED SEPT. 21, 1962
HOME OF THE SAN BERNARDINO COUNTY FAIR
CALIFORNIA

# CITY OF VICTORVILLE

## ENGINEERING DEPARTMENT

# *STANDARD SPECIFICATIONS FOR PUBLIC IMPROVEMENTS*

All public improvements constructed by or under the inspection of the City of Victorville shall conform to these specifications and the references contained herein. The design and construction standards used for any project should equal or exceed the minimum given in these Standard Specifications to the maximum extent feasible. The design and construction standards that are set herein are to provide a guide for the engineers and contractors to exercise sound judgment in applying standards with the approval of the City Engineer.

Public improvements undertaken by the City of Victorville may deviate from these specifications with plan and specification approval by the City Engineer. In the event of conflicts between any provision contained in these Standard Specifications and the references contained herein, these Standard Specifications shall govern, unless they conflict with State or Federal regulations.

Date: June 5, 2007

REGISTERED PROFESSIONAL ENGINEER
JOHN A. McGLADE
No. 40935
Exp. 3/31/09
CIVIL
STATE OF CALIFORNIA

John A. McGlade

John A. McGlade, P.E., City Engineer
R.C.E. 40935, Expires 3/31/09

RESOLUTION NO. 07-159

A RESOLUTION OF THE CITY COUNCIL OF THE CITY OF VICTORVILLE AMENDING STANDARD SPECIFICATIONS FOR PUBLIC IMPROVEMENTS WITHIN THE CITY AND RESCINDING RESOLUTION NO. 76-027

WHEREAS, the Victorville Subdivision Ordinance No. 458, makes reference to and authorizes the establishment of certain standard specifications for public improvements within the City of Victorville; and

WHEREAS, such standards have been established for the purpose of avoiding excessive maintenance to the City of Victorville and to protect the health, safety and welfare of the general public.

WHEREAS, this resolution supersedes Resolution No. 76-27, which was passed, approved, and adopted on the 19th day of April, 1976.

NOW, THEREFORE, THE CITY COUNCIL OF THE CITY OF VICTORVILLE DOES HEREBY RESOLVE AS FOLLOWS:

SECTION 1. That the amended Standard Specifications for Public Improvements dated January 8, 2007, and entitled “City of Victorville Engineering Department Standard Specifications for Public Improvements” are hereby adopted.

SECTION 2. That said Standard Specifications for Public Improvements shall apply to the construction of all public improvements within the City of Victorville insofar as they shall apply.

PASSED, APPROVED AND ADOPTED this 5th day of June 2007.

Terry E. Caldwell
MAYOR OF THE CITY OF VICTORVILLE

ATTEST:

Carolee Bates
CITY CLERK

APPROVED AS TO FORM:

ASSISTANT CITY ATTORNEY

I, CAROLEE BATES, City Clerk of the City of Victorville and ex-officio Clerk to the City Council of said City, DO HEREBY CERTIFY that the foregoing is a true and correct copy of Resolution No. 07-159 and was adopted at a meeting held on the 5th day of June 2007, by the following roll call vote, to wit:

AYES: Councilmembers Almond, Cabriales, Hunter and Rothschild

NOES: None

ABSENT: Mayor Caldwell

ABSTAIN: None

Carolee Bates
CITY CLERK OF THE CITY OF VICTORVILLE

CITY OF VICTORVILLE
INCORPORATED SEPT. 21, 1962
HOME OF THE SAN BERNARDINO COUNTY FAIR
CALIFORNIA

# *STANDARD SPECIFICATIONS FOR PUBLIC IMPROVEMENTS*

# CITY OF VICTORVILLE

## *PART I - DESIGN*


1. General..... 1
2. Drainage..... 1
3. Streets..... 2
4. Bike Routes..... 3


## *PART II – CONSTRUCTION SPECIFICATIONS – GENERAL PROVISIONS*


1. General..... 4
2. Definitions..... 4
3. Conformance with Laws and Regulations..... 5
4. Payment Provisions of Standard Specifications..... 5


## *PART III – CONSTRUCTION SPECIFICATIONS – DETAILS*

### *Section I – Asphalt Concrete (A.C.)*


1. General..... 6
2. Type..... 6
3. Spreading and Compacting..... 7
4. Smoothness..... 7
5. Density..... 7


### *Section II – Concrete Curb and Gutter, Cross Gutters, Spandrels, Sidewalks, Driveway Approaches and Driveways*


1. General..... 8
2. Driveway Locations..... 8
3. Construction Methods..... 8
4. Base Material..... 9


### *Section III – Concrete Structures*


1. General..... 10


### *Section IV – Concrete Block Retaining Walls and Garden Walls*


1. General..... 11
2. Footings for Concrete Block Walls..... 11

## *STANDARD SPECIFICATIONS FOR PUBLIC IMPROVEMENTS*

## CITY OF VICTORVILLE


***Section V – Chain Link Fencing***

1. General..... 12

***Section VI – Earthwork***

1. General..... 13
2. Compaction... ..... 13
3. Structure Excavation and Backfill..... 13

***Section VII – Aggregate Bases***

1. General..... 14

***Section VIII – Sewers***

1. General..... 16
2. Materials..... 16
3. Construction..... 16
4. Testing..... 17

***PART IV – MAP STANDARDS***

1. General..... 18
2. Basis for Standards..... 18
3. Monuments..... 18
4. Soil Tests..... 20
5. Owners' Statement (Basic Format)..... 20
6. City Engineer's Statement..... 21
7. Signature Omissions..... 22
8. Surveyor's (or) Engineer's Statement..... 22
9. City Engineer's Statement of Required Improvements..... 23
10 City Council's Acceptance Certificate..... 24
11. City Council's Abandonment Certificate..... 25
12. Auditor's Certificate..... 25
13. Board of Supervisors' Certificate..... 25
14. San Bernardino County Recorder's Certificate..... 26
15. Amending Maps..... 26

## *STANDARD SPECIFICATIONS FOR PUBLIC IMPROVEMENTS*

## CITY OF VICTORVILLE

## *DRAWINGS*

### ***STREET IMPROVEMENTS***


Standard Curb and Gutter (2 Sheets)..... S-01
Residential Drive Approach…….. S-02
Residential Drive Approach for Cul-de-Sac or Knuckle..... S-02A
Standard Commercial Drive Approach, Type 1..... S-03
Flared Curb Commercial Drive Approach, Type 2..... S-03
Curb Return Commercial Drive Approach, Type 3..... S-03
Standard Commercial and Residential Sidewalk…… S-04
Standard Cross Gutter…… S-05
Barricade Details…… S-06
Standard Manhole/Clean-Out Frame and Cover Installation…… S-07
Slotted Cross Gutter (OBSOLETE)…… S-08
Standard Curb…… S-09
Trench Backfill and Pavement Repairs (2 Sheets)…… S-10
Residential and Commercial Curb Ramp (Revised as S-11A)…… S-11
Residential and Commercial Curb Ramp (2 Sheets)…… S-11A
Fire Hydrant Location…… S-12
Corner Utility Location…… S-13
P.L.S.S. Survey Monumentation Replacement…… S-14
Access Rights Standard (OBSOLETE)…… S-15
Centerline Survey Ties, Standard 1…… S-16
Centerline Survey Ties, Standard 2…… S-17
Slope and Parkway Grading Requirements…… S-18
Typical Section Asphaltic Concrete Pavements (OBSOLETE)…… S-19
Standard Cutoff Wall for Drainage Channel…….. S-20
Standard Street Geometric Cross-Sections (2 Sheets)…… S-21
Metal Hand Railings (2 Sheets)..... S-22
Eight-Foot Crossarm Mounting for Ball Field Lights (OBSOLETE)…… S-23
Rural Street Section…… S-24
Street Design Standards (2 Sheets)…… S-25
Typical Cul-de-Sac…….. S-26
Offset Cul-de-Sac…… S-27
Standard Knuckle…… S-28
Internally Illuminated Street Name Sign (I.I.S.N.S.)…….. S-29
Internally Illuminated Street Name Sign Safety Cable……..... S-30


### ***DRAINAGE IMPROVEMENTS***


Standard Wash Crossing……..... D-01A
Channel Crossing in Existing Rural Residential Areas Only..... D-01B

## *STANDARD SPECIFICATIONS FOR PUBLIC IMPROVEMENTS*

## CITY OF VICTORVILLE


Standard Drop Inlet (3 Sheets)……..... D-02
Standard Drop Inlet (OBSOLETE)……..... D-03
Storm Drain Manhole Frame and Cover……..... D-04
Precast Storm Drain Manhole.....……... D-05
Dry Well System Details (2 Sheets)……..... D-06
Dry Well and Interceptor…….…… D-07


***GENERAL SURFACE IMPROVEMENTS***


Circular Driveway (2 Sheets)…….. GS-01
Hammerhead Driveway, Type 1 (2 Sheets)……..…… GS-02
Hammerhead Driveway, Type 2 (2 Sheets).....…… GS-03
Hammerhead Driveway, Type 3 (2 Sheets)..... GS-04
Hammerhead Driveway, Type 4 (2 Sheets)..... GS-05
Hammerhead Driveway, Type 5 (2 Sheets)..... GS-06


***SANITARY SEWER IMPROVEMENTS***


Sanitary Sewer Manhole ……..…… SS-01
24” Sanitary Sewer Manhole Frame and Cover……..…… SS-02
30” Sanitary Sewer Manhole Frame and Cover……..…… SS-02A
Sewer Laterals……..…… SS-03
Sewer Clean-Out…… SS-04
Clay and PVC Sewer Pipe Bedding (2 Sheets)……...…….. SS-05
Clean-Out Frame and Cover……..…… SS-06
Sanitary Sewer Drop Manhole…….. SS-07
Sanitary Sewer Manhole with Internal Sewer Main Drop..... SS-07A
Temporary Sand Trap…… SS-08
Sanitary Sewer Saddle……..…….. SS-09
Pump Station Manhole Top Slab (OBSOLETE)……..…… SS-10

Engineering Department Fees (see attached)


***WATER IMPROVEMENTS***


Water Standard Specifications..……..……..... W-Index
W-01 through W-42

# *STANDARD SPECIFICATIONS FOR PUBLIC IMPROVEMENTS*

# *CITY OF VICTORVILLE*

# *PART I – DESIGN*

## 1. General

All public works shall conform to the design criteria set forth in Part I of these Specifications and the Standard Drawings included as part of these Specifications.

## 2. Drainage

Drainage facilities shall be designed to carry a one-hundred (100) year frequency of return storm with ultimate anticipated development of the watershed without the depth of water in streets exceeding the top of curbs by more than three inches, but in no case shall such water level reach the finished pad grade elevation where a building may be located. In areas where the natural relief of the ground does not preclude the possibility of the backwater elevation exceeding existing or future building floor elevations, the capacity of the drainage system shall be sufficient to insure that the backwater resulting from a 100-year return storm shall be below building floor elevations

Cross gutters may be used to carry water across minor or collector streets at intersections only. Where it is necessary to carry local drainage across a minor or collector street in the middle of a block, and upon approval by the City Engineer, it shall be carried in a pipe with a capacity to accommodate a ten-year frequency of return storm, and shall be combined with a properly engineered dip to accommodate the one-hundred (100) year frequency of return storm within the design parameters set forth herein.

Where it is necessary to carry local drainage across an arterial street in the middle of a block, it shall be carried in pipe with a capacity to accommodate the one-hundred (100) year frequency of return storm within the design parameters set forth herein.

Where a street must cross a major wash, the standard wash crossing (D-01A) as set forth herein in the Standard Drawings shall be utilized. The pipe culverts shown shall be adequate to carry the ten-year storm (beneath), and 100-year (with dip) frequency of occurrence flood flow for minor and collector streets and a 100-year storm (beneath) frequency of occurrence flood flow for arterial streets. The wash crossing shall have sufficient capacity to pass the 100-year frequency of occurrence flood flow as a dip crossing when acting with the culvert (local and collector streets).

In no case shall any pipe installed for drainage purposes within the highway be less than 18 inches in inside diameter or other than reinforced concrete pipe construction.

A soft-bottom channel will be permitted for flow velocities of up to 5 FPS, (feet per second) with side slope protection; however, velocities of 5 FPS to 12 FPS requires a concrete lining.

Drainage channels and conduit shall have sufficient capacity to contain a 100-year frequency of occurrence runoff with two feet of freeboard on channels and 0.75 feet of freeboard between design water surface elevation inside catch basin and gutter at catch basin inlet. In no case however, shall the 100-year frequency of return storm under ultimate anticipated development of the watershed area result in depth of water in streets exceeding the top of curbs by more than three inches. The maintenance of freeboard between the design water surface elevation and the gutter at catch basin inlet is not required for the 100-year frequency of return storm in the design of minor conduits.

## 3. Streets

The structural section of streets shall be designed using the method set forth in the current California Department of Transportation "Highway Design Manual," latest version, and shall be based upon soil tests of representative soil samples. At least one set of results of California Test Method No. 301 and 217 must be submitted with subdivision improvement plans to substantiate the street structural section design for each 500 lineal feet or fraction thereof of street shown on the plans. The minimum thickness of asphalt concrete for locals, collectors, arterials, major arterials and super arterials shall be in accordance with Standard Drawing S-25 entitled "Street Design Standards" contained within these Standard Specifications. Also, the minimum base shall be eight inches of Class 2 Base (per Caltrans Std. Sec. 26-1.02 A, see Page 14 within this document).

Vertical curve lengths shall provide adequate passing and stopping sight distance. Stopping sight distance must be provided in all cases of design.
Reference is made to the American Association of State Highway Officials' publication, "A Policy on Design of Urban Highways and Arterial Streets," for minimum lengths of vertical curves. Minimum design speed for residential streets shall be 30 miles per hour. See Standard Drawing S-25, "Street Design Standards" for additional information. Reference is made to the AASHTO publication, "Geometric Design of Highways and Streets" for general design guide parameters.

Cul-de-sacs shall have a property line radius of fifty (50) feet and a face of curb radius of forty-three (43) feet. Cul-de-sac streets shall have a maximum length of four-hundred (400) feet except that a maximum length of five-hundred (500) feet may be permitted provided said street fronts on no more than sixteen (16) lots, excluding corner lots.

Minimum centerline radii for local streets shall be not less than three-hundred (300) feet. For collector streets, the minimum centerline radius shall be not less than six-hundred (600) feet (see S-25). The minimum centerline radius for major and secondary arterials shall be based upon design speed considerations for the particular street and the design charts set forth in the California Division of Highways "Highway Design Manual of Instruction."

Grade of streets shall be not less than .4% and shall be no greater than 10% for local streets and 7% for arterial and collector streets unless otherwise approved by the City Engineer. Grades in excess of this may be approved based upon the length of such grades and/or other design considerations which will not compromise basic highway design standards referenced herein.

## 4. Bike Routes

A. General

Attention is directed to Chapter 1000, "Bikeway Planning and Design" of the California Department of Transportation "Highway Design Manual," latest version.

B. Definitions

Shared Route – A Shared Route is a street identified as a bicycle facility by "Bike Route" guide signing only. There are no special lane markings and bicycle traffic shares the roadway with motor vehicles.

Bike Lane – A bike lane is a lane specifically delineated for use by bicycles on the paved area of a road. It is usually located along the edge of the paved area or between the parking lane and the first motor vehicle lane provided sufficient room exists to allow operation of the bicycle in this area without undue hazard to the cyclist. Bike lane facilities are utilized along arterials and parkways where on-street parking is not required and where traffic volumes will allow safe joint use of the paved street area. Bike lanes shall be located only upon streets where traffic volumes during peak hours do not require full use of the roadway and parking is: 1) not required, or 2) restricted. On such streets where bike lanes are installed, it may be necessary to eliminate parking on the side of the street where the bike lane is located.

Bike Path – A bike path is a special pathway facility for the exclusive use of bicycles, which is separated from motor vehicle facilities by a space or a physical barrier. The bike path may be on a portion of the motorized network right-of-way or on a special right-of-way not related to the motor vehicle facility. It may be grade separated or have street crossings at designated locations. It is identified with guide signing and also may have pavement markings. These pathways are designed to serve major transportation corridors and are proposed as a joint use within drainage and utility easements.

# *CITY OF VICTORVILLE*

## *PART II – CONSTRUCTION SPECIFICATIONS – GENERAL PROVISIONS*

### 1. General

The Standard Specifications referred to herein shall mean the California Department of Transportation Standard Specifications, current version. The technical provisions of said Standard Specifications relating to materials and methods of construction are hereby adopted and shall have the same force and effect as though set forth fully herein except to the extent that said Standard Specifications are modified by the provisions of these Standard Specifications for Public Improvements.

In the event of a conflict between these Construction Specifications and said Standard Specifications, these Construction Specifications shall govern.

In the event there is a conflict between these Construction Specifications and the Special Provisions and/or Plans which are approved by the City Council for any work undertaken by the City under contract, the approved Special Provisions and Plans, in that order, shall govern.

All references to the APWA "Green Book" shall mean the American Public Works Association, Standard Specifications for Public Works Construction, latest edition.

Work of public improvement, which is done under the inspection of the City of Victorville shall conform to these Construction Specifications and the technical provisions of the Standard Specifications as modified herein.

### 2. Definitions

Wherever in these Construction Specifications or the applicable portions of the Standard Specifications the following terms are used, the intended meaning shall be as follows:

A. State: Department of Transportation (Caltrans)

B. City, or owner: City of Victorville

C. Director: The City Engineer of the City of Victorville

D. Engineer: Whenever not qualified, shall mean the City Engineer of the City of Victorville, California, acting either directly or through his properly authorized agents; each agent acting within the scope of the authority delegated to him.

E. Contractor: The party of the second part entering into a contract with the City of Victorville, California, for furnishing of material and the performance of work required by the approved plans and special provisions, including his duly authorized agents acting severally within the scope of their authorities. Where works of subdivision improvement are being constructed under the inspection of the City of Victorville, the term "Contractor" shall mean subdivider as set forth in the applicable subdivision agreement for the construction of public improvements associated with the particular subdivision. In the case of other public improvements, "Contractor" shall mean the permittee to whom a permit has been issued for construction within the public right-of-way or easement.

F. Definitions which apply to the technical provisions of the Standard Specifications shall be as set forth in said Standard Specifications.

## 3. Conformance with Laws and Regulations

Contractor shall conform to all laws and regulations of the various State and local agencies having jurisdiction.

## 4. Payment Provisions of Standard Specifications

References to payment in the Standard Specifications shall, with respect to construction performed by contract by the City of Victorville, apply only insofar as said references are or are not modified by the construction contract applying to that particular work or improvement.

When these Specifications and the Standard Specifications are applied to work which is being performed under the inspection of the City of Victorville, but which is being paid for by a third party, those provisions of the Standard Specifications relating to measurement and payment shall not apply.

# *CITY OF VICTORVILLE*

## *PART III – CONSTRUCTION SPECIFICATIONS - DETAILS*

## *Section I - Asphalt Concrete (A.C.)*

### 1. General

Asphalt Concrete material shall conform to Section 203, entitled "Bituminous Material" of the Standard Specifications for Public Works Construction by the American Public Works Association, latest edition.

Asphalt Concrete placement and construction methods shall conform to Section 302-5, entitled "Asphalt Concrete Pavement" of the Standard Specifications for Public Works Construction by the American Public Works Association, latest edition.

### 2. Type

Asphalt Concrete base course shall be B-PG 70-10.

Asphalt Concrete paving shall be C2-PG 70-10.

### 3. Spreading and Compacting

The depositing, distributing, and spreading of the Asphalt Concrete shall be accomplished in a single, continuous operation by means of a self-propelled mechanical spreading and finishing machine designed especially for that purpose. The machine shall be equipped with a suitable full-width compacting screed capable of being accurately regulated and adjusted to distribute a layer of the material to a definite predetermined thickness. When paving is of a size or in a location that use of a self-propelled machine is impractical, the City Engineer may waive the self-propelled requirement.

Asphalt Concrete shall be placed in layers not exceeding 3" or less than 1" in compacted thickness.

At the time of delivery to the job site, the temperature of the Asphalt Concrete mixture shall not be lower than 285-degrees Fahrenheit or higher than 350-degrees Fahrenheit; the lower limit to be approached in warm weather and the higher in cold weather. Asphalt Concrete shall be spread and the first coverage of initial or breakdown compaction shall be performed when the temperature of the mixture is not less than 250-degrees Fahrenheit, and all breakdown compaction shall be completed before the temperature of the mixture drops below 200-degrees Fahrenheit.

Longitudinal joints in the top layer shall correspond with the edge of the proposed traffic lanes. Longitudinal joints in all other layers shall be offset not less than 6" alternatively each side of the edge of traffic lanes.

Asphalt Concrete shall not be placed if the atmospheric temperature is not at least 50-degrees Fahrenheit and rising, or there is unsuitable weather.

Asphalt Concrete shall not be placed when underlying layer or surface is frozen.

## 4. Smoothness

Upon completion, the pavement shall be true to grade and cross section. When a 10-ft. straightedge is laid on the finished surface parallel to the centerline of the roadway, the surface shall not vary from the edge of the straightedge more than 1/8", except at intersections or at changes of grade. Any areas that are not within this tolerance shall be brought to grade immediately following the initial rolling. If the paving material has cooled below the lower limits of the spreading temperatures, the top lift of paving material in the area to be repaired shall be removed by a method approved by the City Engineer. Repairs shall not be made to pavement surface by feather-edging at the join lines.

## 5. Density

The compaction after rolling shall be 95% of the density obtained with the California Kneading Compactor per California Test 304.

Paved areas not to be subject to vehicular traffic shall be compacted to 90% of California Test 304.

## *Section II - Concrete Curb and Gutter, Cross Gutters, Spandrels, Sidewalks, Driveway Approaches and Driveways*

### 1. General

Attention is directed to the provisions of the Standard Specifications referring to "Concrete Curbs and Sidewalks" Section 73, and the provisions of the Standard Specifications referring to Section 90 "Portland Cement Concrete." Portland Cement concrete for construction of the improvements referred to in this Section shall contain not less than 550 pounds of cementitious material per cubic yard with four percent air entrainment and conforming with the applicable provisions of the Standard Specifications.

### 2. Driveway Locations

The bottom edge of the curb depression at residential driveway approaches near road intersections shall be at least forty (40) feet from the prolongation of the curb face of the intersecting street. The bottom edge of the curb depression at residential driveway approaches shall extend no closer than five feet to side lot lines. A single driveway approach serving two single-family residential properties shall not be permitted.

The centerline of new commercial driveway approaches near road intersections shall be at least one hundred fifty (150) feet from the prolongation of the curb face of the intersecting street. The minimum length of full height curb between commercial driveway approaches shall be one hundred (100) feet.

### 3. Construction Methods

The surface of concrete shall not vary more than 0.02 feet from a ten-foot straight edge, except at grade changes and the finished surface shall be free from blemishes.

Expansion joints one-half inch wide shall be constructed at all returns. Weakened plane joints shall be constructed at intervals of ten feet. Expansion joint filler material shall be shaped to fit the concrete that is being placed and shall conform to the standard specifications.

Whenever standard curb and sidewalk are being constructed and the sidewalk is being placed contiguous to the standard curb, the standard curb and sidewalk shall not be poured monolithically.

Score lines in sidewalks shall be transverse at a spacing of five feet. When placing new sidewalk adjacent to existing sidewalk, score lines shall be placed in line with and match those existing.

Concrete shall not be placed on anything frozen or ice-coated, including but not limited to ground, sub-grade, base, forms, reinforcing steel, structural steel, conduits, pre-cast members or construction joints.

Concrete shall be maintained at a temperature of not less than 40-degrees Fahrenheit for 72 hours after placing. If the Contractor chooses to place concrete when there is a possibility of the ambient temperature falling below 40-degrees Fahrenheit, the Contractor shall submit a written outline of the proposed method for protecting the concrete for the Engineer's approval.

Under conditions of precipitation, placing of concrete shall be stopped before the quantity of surface water is sufficient to damage surface mortar or cause a flow or wash on the concrete surface, unless the Contractor provides adequate protection against damage.

Concrete that has been frozen, rained on or damaged by other causes, as determined by the Engineer, shall be removed and replaced by the Contractor at the Contractor's expense.

Curing of concrete shall be in accordance with the provisions of Caltrans Standard Specifications, Section 90-7, "Curing Concrete."

## 4. Base Material

Base material for cross gutters and spandrels shall conform to the requirements for base material per Section 26-1.02A, Class 2 Aggregate Base of the State of California Department of Transportation Standard Specifications, latest edition.

Base material and forms for concrete curbs, curb and gutter, driveways, sidewalks, cross gutters and spandrels shall be watered and thoroughly compacted before placing concrete. Relative compaction and minimum thickness of base material for the various concrete facilities shall be as follows:

| | | |
|---|---|---|
| Concrete curbs and curb and gutter | 95% relative compaction | 4" thickness (Typical) |
| Sidewalk | 90% relative compaction | 4" thickness |
| Residential Driveways | 95% relative compaction | 6" thickness |
| Commercial Driveways | 95% relative compaction | 8" thickness |
| Cross gutters and Spandrels | 95% relative compaction | 8" thickness |

## *Section III - Concrete Structures*

### 1. General

Attention is directed to the provisions of the Sections entitled “Concrete Structures” and “Portland Cement Concrete” of the Standard Specifications. Portland Cement Concrete for construction of concrete structures shall be Class 1. Class 1 concrete shall contain not less than 675 pounds of cementitious material per cubic yard, with or without air entrainment, as set forth on the applicable standard drawing and as directed by the engineer.

## *Section IV - Concrete Block Retaining Walls and Garden Walls*

### 1. General

Concrete block walls shall be constructed per the City of Victorville Development Department/Building Division standards for retaining walls and garden walls, or engineered plans shall be submitted to the Building Division for review and approval.

### 2. Footings for Concrete Block Walls

Footings shall conform to the provisions of the Section entitled “Concrete Structures” of the Standard Specifications. Footings shall be formed in all cases, except where the natural angle of repose of the material against which the footings are being placed is satisfactory in the opinion of the engineer, to permit pouring of concrete directly against the existing soil material without detrimental effect to the design stability and structural integrity of the wall. Concrete for footings shall be Class 2 and shall contain not less than 590 pounds of cementitious material per cubic yard. Excavation and backfill for footings shall conform to the appropriate section of the Standard Specifications.

## *Section V - Chain Link Fencing*

### 1. General

Chain link fencing shall conform to the appropriate provisions of the Standard Specifications.

# *Section VI - Earthwork*

## 1. General

Attention is directed to the provisions of Section 19 entitled “Earthwork” of the Standard Specifications.

## 2. Compaction

Attention is directed to the provisions of Section 19-5 entitled “Compaction” of the Standard Specifications. All compaction shall be at optimum moisture content and determined in accordance with the American Society for Testing and Materials (ASTM 1557). Other methods may be required for special circumstances as required by the Engineer.

Relative compaction of not less than 90% for sub-grade material for the right-of-way improvements shall be obtained for a minimum depth of twelve inches below the grading plane and for the width of the improvements.

Relative compaction of not less than 95% shall be obtained for embankment under bridge and retaining wall footings without pile foundation within the limits established by incline planes sloping one and one-half to one (1½:1) out and down from lines one-foot outside the bottom edges of the footing.

## 3. Structure Excavation and Backfill

Structure excavation and backfill shall conform to the appropriate provisions of the Standard Specifications.

## *Section VII - Aggregate Bases*

### 1. General

Attention is directed to the provisions of Section 26-1.02A, entitled "Class 2 Aggregate Base of State of California, Department of Transportation," dated May 2006, as follows:

26-1.02A Class 2 Aggregate Base

Aggregate for Class 2 aggregate base shall be free from organic matter and other deleterious substances, and shall be of such nature that it can be compacted readily under watering and rolling to form a firm, stable base. Aggregate may include material processed from reclaimed asphalt concrete, portland cement concrete, lean concrete base, cement treated base or a combination of any of these materials. The amount of reclaimed material shall not exceed 50 percent of the total volume of the aggregate used.

Aggregate shall conform to the grading and quality requirements shown in the following tables. At the option of the Contractor, the grading for either the 1½-inch maximum or ¾-inch maximum shall be used, except that once a grading is selected, the grading shall not be changed without the Engineer's written approval.

AGGREGATE GRADING REQUIREMENTS

| | Percent Passing | | | |
|---|---|---|---|---|
| | 1½" Maximum | | ¾" Maximum | |
| Sieve Sizes | Operating Range | Contract Compliance | Operating Range | Contract Compliance |
| 2" | 100 | 100 | --- | --- |
| 1 ½" | 90-100 | 87-100 | --- | --- |
| 1" | --- | --- | 100 | 100 |
| ¾" | 50-85 | 45-90 | 90-100 | 87-100 |
| No. 4 | 25-45 | 20-50 | 35-60 | 30-65 |
| No. 30 | 10-25 | 6-29 | 10-30 | 5-35 |
| No. 200 | 2-9 | 0-12 | 2-9 | 0-12 |

QUALITY REQUIREMENTS

| Test | Operating Range | Contract Compliance |
|---|---|---|
| Resistance (R-value) | --- | 78 Min. |
| Sand Equivalent | 25 Min. | 22 Min. |
| Durability Index | --- | 35 Min. |

The aggregate shall not be treated with lime, cement or other chemical material before the Durability Index test is performed. Untreated reclaimed asphalt concrete and portland cement concrete will not be considered to be treated with lime, cement or other chemical material for purposes of performing the Durability Index test.

If the results of either or both the aggregate grading and Sand Equivalent tests do not meet the requirements specified for “Operating Range” but meet the “Contract Compliance” requirements, placement of the aggregate base may be continued for the remainder of that day. However, another day’s work may not be started until tests, or other information, indicate to the satisfaction of the Engineer that the next material to be used in the work will comply with the requirements specified for “Operating Range.”

If the results of either or both the aggregate grading and Sand Equivalent tests do not meet the requirements specified for “Contract Compliance,” the aggregate base which is represented by these tests shall be removed.

No single aggregate grading or Sand Equivalent test shall represent more than 500 cubic yards or one day’s production, whichever is smaller.

When aggregate base is to be measured by the ton, the weight will be converted to volume for the purpose of the above paragraphs. Factors for converting tons to cubic yards will be determined by the Engineer.

# *Section VIII - Sewers*

## 1. General

Sanitary sewers and appurtenances shall be constructed as shown on the Plans in accordance with these Standard Specifications and Drawings and the Standard Specifications for Public Works Construction and Section 64630, Title 22, of California Administrative Code regarding water and sewer separation.

## 2. Materials

A. Concrete – Concrete for manhole bases, sewer saddles, etc. shall be Class 1 with a compressive strength of 3250 PSI.

B. Sewer Pipe – Sewer pipe and fittings shall conform to the standards set forth by ASTM. Sewer pipe and fittings shall be extra strength Vitrified Clay Pipe (VCP) per ASTM Standard C-700 or Polyvinyl Chloride Pipe (PVC) per one of these ASTM Standards; D-2680, D-3034 and F-679, with an SDR value not more than 35 or F-949. Pipe lengths shall not exceed 20 feet. Joints shall be push-on type bell and spigot with Elastomeric Ring Gaskets, per ASTM Standard Specifications F-477 and D-3212.

C. Manholes – Manholes shall be constructed from pre-cast concrete sections per Standard Drawing SS-01.

D. Frames and Covers – Frames and covers shall be cast-iron painted with a black bituminous paint. Manhole frame and cover shall be per Standard Drawing SS-02 and have a 24-inch diameter clear opening and shall be inscribed “Victorville” or “City of Victorville” and “Sewer.” Clean out frame and cover shall have a ten-inch diameter clear opening and be inscribed “Sewer.” All lettering shall be a minimum of one-inch in height.

## 3. Construction

Mainline sanitary sewers shall be eight-inch diameter minimum and shall be constructed in the street with centerline sewer pipe, five-feet minimum from street centerline. Typically, centerline sewer pipe is installed five-feet off centerline street. Residential laterals shall be four-inch diameter minimum and commercial laterals shall be six-inch diameter minimum. Lateral shall be spaced at five-foot centers minimum and five feet clear of manholes, per Standard Drawing SS-03. Cover on mainline sewer is five-feet minimum unless concrete encased or special pipe approved by the engineer is used, then three-feet minimum. Laterals shall have four-foot minimum cover unless concrete encased or special pipe approved by the engineer is used, then three-foot minimum. Note: On shallow mainline sewer laterals, it may be impossible to construct due to cover requirements.

Sewer pipe shall be installed on straight line and straight grade. Flowline grade on mainline sewer shall be 0.5 percent minimum unless special conditions warrant, then flowline grade may be reduced to 0.4 percent with City Engineer's approval. Mainline in all cul-de-sacs and end of line with 24 or fewer lateral connections shall have a minimum flow line grade of 0.5 percent. Lateral shall have one percent minimum grade on six-inch diameter pipe and two percent minimum on four-inch diameter pipe. Sewer lines shall be designed to maintain two-feet per second flow velocity, assuming three-quarter full on trunk lines and one-half full on mainline. Pipe bedding shall be per Standard Drawings SS-05.

Sewer lines shall be installed below and as far from water mains as possible. Provide a minimum of ten-feet horizontal separation and one-foot vertical separation between sewer mains and laterals and water distribution lines. If the horizontal separation between sewer and water main must be less than ten-feet and the sewer is more than one-foot below the water main, special construction as approved by the City Engineer is required.

Backflow preventors shall be installed on all laterals if such lateral is connected to a ten-inch or larger mainline.

Manholes shall be constructed per Standard Drawing SS-01 and shall be spaced at 350-foot center maximum. A manhole shall be constructed for joining any lateral eight-inches diameter or larger to the mainline. Cleanouts may be used at the end for mainline sewer runs less than 175-feet per Standard Drawing SS-04. Invert elevations shall provide 0.10-foot fall through manhole on straight runs and 0.20-foot fall for side runs except if downstream pipe is a larger diameter; then match overt elevations.

Trunk line sewers are defined as those having a minimum capacity of 1.5 MGD when depth of flow divided by pipe diameter is equal to 0.75 ft., which are identified in the latest Sewer Master Plan. Cover on trunk line sewer is a minimum of eight feet.

## 4. Testing

After the sewer mainline cleaning (balling) to remove dirt and debris and a minimum of 14 days following completion of construction, the maximum deflection allowed on PVC pipe shall be checked by pulling a rigid nine-sided mandrel with a minimum diameter as specified in Section 306-1.2.12 of the Standard Specifications for Public Works Construction. Then a leakage air pressure test shall be run for all mainline and trunk sewers per Section 306-1.4.4 of the Standard Specifications for Public Works Construction. Any failures of these tests shall be corrected prior to the next test and final acceptance by the City.

# *CITY OF VICTORVILLE*

# *PART IV - MAP STANDARDS*

## 1. General

These standards are to supplement and clarify the provisions of Title 17 of the Victorville Municipal Code.

## 2. Basis for Standards

Standards contained in this part are based on the following:

A. Manual of Surveying instructions for the Survey of the Public Lands of the United States, prepared and published by the Bureau of Land Management.

B. Title 7, Division 2, Subdivisions of the Government Code referred to herein as the Subdivision Map Act.

C. The Land Surveyors Act and Administrative Rules, State of California.

D. Title 17 of the Victorville Municipal Code.

E. San Bernardino County Surveyor's Office Final Map and Parcel Map Standards.

## 3. Monuments

A. Lead and Surveyor's tags set in concrete shall be considered a permanent monument or reference point.

B. Standards:

(1) Two-inch I.D. (minimum) iron pipe shall be used at all section corners, quarter corners and boundaries of subdivisions requiring a final map.

One-inch I.D. (minimum) iron pipe shall be installed on the boundaries of subdivisions requiring a parcel map on street centerlines and the intersection of street centerlines.

(2) For centerline intersection monuments, section corners and quarter corners, the surveyor or engineer shall provide the City of Victorville a copy of field notes showing a sufficient number (normally four) of durable, distinctive reference points. Such reference points may be lead and tack in sidewalks or curbs, iron pipes, or such substitutes, as not likely to be disturbed.

(3) In asphalt concrete or cement concrete pavement, the top of the pipe with brass tag shall be set one-quarter inch below the finished pavement surface. Plastic survey monument markers (plastic plugs) will not be accepted.

C. For lot corners, a nail and brass tag stamped "License No." shall be set in concrete curb on the prolongation of the side lot line in lieu of the front lot corners. A 1" iron pipe with brass tag or plastic plug stamped "License No." shall be set at rear lot corner unless otherwise noted. Where rear lot corners abut an arterial street with a screen wall in a landscape easement, or a screen wall is installed, a nail and brass tag stamped "License No." shall be set on top of the wall on the side lot line in lieu of the rear lot corner.

D. (1) Government corners shall be replaced when necessary with a two-inch iron pipe with brass plate or brass cap as shown on Standard Drawing S-14.

(2) The following shall apply to section corners wherever set:

(a) Two-inch iron pipe with brass plate or brass cap at section corners. Two-inch I.D. (minimum) iron pipe with brass plate or brass cap shall be set at quarter corners. One-inch I.D. (minimum) iron pipe with brass plate or tag shall be set at one-sixteenth corners.

(b) All section and quarter corners directly used in the subdivision of a section will be marked with a permanent durable monument as specified above. One-sixteenth corners will be so marked when pertinent to the survey.

E. Control boundary monuments shall be set and are subject to inspection prior to recordation of final map or parcel map. If proposed grading conditions prohibit the setting of monuments as noted above, a letter of deferment shall be obtained from the City Engineer for each such subdivision. The top of all lot stakes will be set three to four inches above surface of ground.

F. Diagrams of centerline tie standards. Standard drawings S-16 and S-17 show approved methods of tying out P.I.'s (Point of Intersection), B.C. (Begin Curve), E.C. (End Curve) and midpoints. Any three ties, as shown on the diagram, shall suffice.

G. Basis of Bearings means the bearing in degrees, minutes and seconds, or equivalent, of a line between two (2) found controlling monuments which serves as the reference bearing for all other lines on the survey.

A clearly stated "Basis of Bearings" is referencing the bearing between two (2) found controlling monuments which are the same monuments shown on an existing map of record with the same bearing and which were physically existing at the time the property was surveyed.

## 4. Soil Tests

A. The preliminary soils report for subdivisions requiring a final map shall accompany the application for approval by the City Council of said map unless required by the Planning Commission to be submitted with the tentative map.

A note is required on the map stating the date of the report and the name of the engineer making the report. For example:

A soils report was prepared for this tract by _____(name)_____, (RCE) or (GE) ___(number)_____ of ____(company)_____ dated _____ and is on file with the City of Victorville Engineering Department.

B. The preliminary soil report for subdivisions requiring a parcel map, if such report has been required, shall accompany the original map submitted for acceptance by the City.

## 5. Owners' Statement (Basic Format)

A. Final Maps:

(1) We hereby state that we are all of the parties having any record title interest in the land subdivided as shown on the annexed (tract/parcel) map and that we are the only persons whose consent is necessary to pass title to said land, and we consent to the preparation and recordation of said map and subdivision as shown within the subdivision boundary line, and we hereby dedicate to the City of Victorville for public use, all the streets shown on said (tract/parcel) map within said subdivision;

(2) We also hereby grant to the City of Victorville, in fee simple, Lot (letter) for open space, basin, landscaping and drainage detention purposes shown on said map within said subdivision;

(3) We further hereby dedicate to the City of Victorville, all rights of vehicular ingress to and egress from (name of street), over and across the southerly lines of Lots _____ and Lots ___ through ___, coincident with the right-of-way of _____ Street and the easterly lines of Lots _____ through _____, coincident with the right-of-way of _____ Avenue shown on said map within said subdivision as "Non-Vehicular Access" or "N.V.A.";

(4) In addition, we hereby dedicate to the City of Victorville, Landscape Easements for the construction, installation and maintenance of landscaping, irrigation systems, slopes and walls shown on said map as “Landscape Easement” or “L.E.”;

(5) We also hereby grant to the City of Victorville, in fee simple, Lot ___ and Lot ___ for Open Space and Landscaping Purposes including the construction, installation and maintenance of landscaping, irrigation systems, slopes and walls shown on said map within said subdivision;

(6) Further, we hereby dedicate to the City of Victorville for the use and benefit of the several public utility companies which are authorized to serve in said subdivision an easement for public utility purposes, delineated on said tract/parcel map as “Public Utility Easement,” or “PUE”, but reserving to ourselves, our heirs and assigns the right to use the underlying land, provided said use shall not interfere with said utility companies use thereof;

(7) Furthermore, we hereby reserve to ourselves, our heirs, assigns and others for the use and benefit of present and future owners of lots/parcels ___ and ___ a Non-Exclusive Reciprocal Access easement for ingress to and egress from said lots/parcels by vehicular and pedestrian traffic, delineated on said map within said subdivision as “Reciprocal Access Easement”.

(8) We also hereby dedicate to the City of Victorville, for public use, easements for the construction, installation and maintenance of drainage systems and sanitary sewer systems, shown on said map as “Drainage Easement” and “Sanitary Sewer Easement;”

And further, by recordation of this final/parcel map, we hereby _____ _____ and we further hereby _____.

By: _____ By: _____
(Type in name and position or title of person signing) (Type in name of position or title of person signing)

**6. City Engineer’s Statement**

A. Final Maps:

I hereby state that I have examined the annexed tract/parcel map, that the subdivision shown thereon is substantially the same as it appeared on the tentative tract/parcel map and any approved alterations thereof, and that all the provisions of Chapter 2 of the Subdivision Map Act and Title 17 of the Victorville Municipal Code have been complied with and I am satisfied that this final/parcel map is technically correct.

Dated: _____ _____

City Engineer
City of Victorville, California
RCE No. _____ Exp. _____
or LS No. _____Exp. _____

**(LEAVE SPACE FOR
CITY ENGINEER'S STAMP)**

## 7. Signature Omissions

Pursuant to the provisions of Section 66436 of the Subdivision Map Act of the State of California, the signatures of the following owners/holders of easements and/or other interests recorded in San Bernardino County have been omitted:

The signatures of the United States of America, the owner of a reservation subject to any vested and accrued water rights for mining, agricultural, manufacturing or other purposes, and reservations to ditches and reservoirs used in connection with such water rights as may be recognized and acknowledged by the local customs, laws and decisions of courts, and a right-of-way reserved for ditches or canals constructed by the authority of the United States" as disclosed by Patent No. _____ recorded ____(date)_____ in book _____, of Patents, Deeds, Official Records, page _____, in the offices of the San Bernardino County Recorder, State of California. Said rights and reservations cover _____ being subdivided and not shown herein.

Southern California Utility Company and West Communications of California, the owners of a ten-foot wide grant of easement and right-of-way for the construction, maintenance and operation of overhead and underground electric and telecommunication systems as disclosed by Document No. 20-_____, recorded __(date)__, Official Records of San Bernardino County. Said easement is shown herein. Said easement cannot be located per the record.

## 8. Surveyor's (or) Engineer's Statement

A. Final Maps:

I hereby state that I am a Registered Civil Engineer (or Licensed Land Surveyor) in the State of California and that this tract/parcel map consisting of ____ sheets is a true and complete representation of a field survey made (by me or under my direction) in conformance with the requirements of the Subdivision Map Act and local ordinance at the request of (name of the actual person requesting the survey) in (month and year) and that all the monuments shown hereon are of the character and occupy the positions indicated, or will be set in such position on or before (month and year), in compliance with Sections 66495 and 66496 of the Subdivision Map Act and are, or will be, sufficient to enable the survey

to be retraced. I hereby state that this final map substantially conforms to the conditionally approved tentative tract/parcel map.

Dated: _____ _____

LS No. _____ Exp. _____

(FOR PARCEL MAPS ONLY – ADD THE FOLLOWING STATEMENT ON THE TITLE SHEET)

**9. City Engineer's Statement of Required Improvements**

A. Parcel Maps:

The following requirements for the construction of off-site and on-site improvements along the street frontages of each parcel created by this subdivision are a condition of the approval of this parcel map. In accordance with the provisions of Sections 66411.1 of the Subdivision Map Act, the improvements shall be installed at such time as a permit or other grant of approval for development of any or all parcels created by this subdivision is issued by the City of Victorville.

(1) The subdivider or any successor in interest of any of the parcels to be created by this subdivision shall be responsible for any cost incurred in the relocation of existing utility facilities where such facilities conflict with the improvements required when said improvements are installed and for the undergrounding of all existing overhead utilities.

(2) The subdivider or any successor in interest of any of the parcels to be created by this subdivision shall be required to provide underground electrical, telephone and communications cable to each parcel created by this subdivision.

(3) The subdivider or any successor in interest of any of the parcels to be created by this subdivision shall provide sanitary sewer service to each parcel created by this subdivision in accordance with the requirements of the City Engineer.

(4) The subdivider or any successor in interest of any of the parcels to be created by this subdivision shall install street lights along the street frontages in accordance with the requirements of the master street lighting plans of the City of Victorville, the Southern California Edison Company and as required by the City Engineer.

(5) The subdivider or any successor in interest of any of the parcels to be created by this subdivision shall provide water service to each parcel created by this subdivision in accordance with the requirements of the City of Victorville Water District and the City Engineer.

(6) The subdivider or any successor in interest of any of the parcels to be created by this subdivision shall install fire hydrants and on-site fire protection to serve each parcel created by this subdivision in accordance with the requirements of the Victorville Fire Department and the City Engineer.

(7) The subdivider or any successor in interest of any of the parcels to be created by this subdivision shall install curbs, gutters, sidewalks, drive approaches, asphalt pavement and drainage facilities along the street frontages for this subdivision in accordance with the Standard Specifications of Public Improvements of the City of Victorville.

(8) The subdivider or any successor in interest of any of the parcels to be created by this subdivision shall provide gas service to each parcel created by this subdivision.

(9) The subdivider or any successor in interest of any of the parcels to be created by this subdivision shall install residential or commercial curb ramps at all intersections.

Dated: _____ _____

City Engineer
City of Victorville, California
RCE No. _____ Exp. _____

**(LEAVE SPACE FOR
CITY ENGINEER'S STAMP)**

**10. City Council's Acceptance Certificate**

A. For Parcel Maps:

I hereby certify that the City Council of the City of Victorville by Resolution No. 76-15, adopted on the 17th day of February, 1976, has authorized me, acting on their behalf, to acknowledge the foregoing offers of dedication, and to accept all streets, alleys or other public ways or places and drainage easements subject to their improvement in accordance with City of Victorville Standards.

B. For Tract Maps:

I hereby certify that the City Council of the City of Victorville, by a motion duly seconded and passed, approved the annexed tract map on the ____ day of _____, 20___, and acknowledged the foregoing offers of dedication and accepted all streets, drainage easements, landscape easements, and lots _____ and _____ in fee simple, subject to their improvement in accordance with City of Victorville Standards. The City of Victorville also accepted the "Non-Vehicular Access" rights.

Dated:_____ _____
City Clerk of the City of Victorville
State of California

By: _____
Deputy

**11. City Council's Abandonment Certificate**

I hereby certify that, pursuant to Sections 66434(g) and 66499.20-1/2 of the Subdivision Map Act, the recordation of this tract map constitutes abandonment by Victorville's City Council of the (east) _____ feet of that _____ foot wide offer of dedication to the City of Victorville per _____, also known as "_____Street" and said _____ are/is within the subdivision boundary line of this final map and not shown herein.

Dated:_____ _____
(Name of Current City Clerk)
City of Victorville
State of California

By: _____
Deputy

**12. Auditor's Certificate**

I hereby certify that according to the records of this office, as of this date, there are no liens against the real property shown upon the annexed map for unpaid State, County, Municipal or local taxes or special assessments collected as taxes, except taxes or special assessments not yet payable, estimated to be $_____.

Dated: _____ (Name of Current County Auditor/Controller Recorder)
County Auditor/Controller-Recorder
County of San Bernardino, California

By: _____
Deputy

**13. Board of Supervisors' Certificate**

I hereby certify that a bond in the sum of $_____, has been executed and filed with the Board of Supervisors of the County of San Bernardino, State of California, conditioned upon the payment of all taxes, State, County, Municipal or local, and all special assessments, collected as taxes, which at the time of the filing of the annexed map with the County Recorder are a lien against said property, but not yet payable and that the subdivider has filed

with me a certificate by the proper officer giving his estimate of the amount of said taxes and special assessments, and said bond is hereby accepted.

Dated:_____ (Name of Current Clerk)
Clerk of the Board of Supervisors
County of San Bernardino, California

By: _____
Deputy

**14. San Bernardino County Recorder's Certificate***

This map has been filed under Document Number _____, O.R. this _____ day of _____, 20__, at _____am/pm, in Book _____ of _____ at pages _____, at the Request of _____ in the amount of $_____.

(Name of Current Auditor/Controller Recorder)
Auditor/Controller-Recorder
County of San Bernardino, California

By: _____
Deputy Recorder

*Note: The Recorder's Certificate can be placed at lower or upper right of map title sheet.

**15. Amending Maps**

The amending map may be a reproduction on linen or polyester base film of the original map to be amended. Space shall be provided for the Recorder's stamp in accordance with the requirements of the San Bernardino County Recorder. The words "Amending Map" shall appear prominently on each sheet of the map near the Tract Map number or Parcel Map number. The following certificate will be added to the original title sheet:

CITY ENGINEER'S STATEMENT (Amending Map)

I hereby state that I have examined the annexed amending tract/parcel map and that the only changes made are those set forth in Section 66469 of the Subdivision Map Act and I am satisfied that this map is technically correct.

Dated:_____ _____
City Engineer
City of Victorville, California
RCE No. _____ Exp. _____

/yb Revised 6/1/07
Revised 7/25/07 (pgs. 20-26)

# STANDARD DRAWINGS

## EXPANSION JOINT

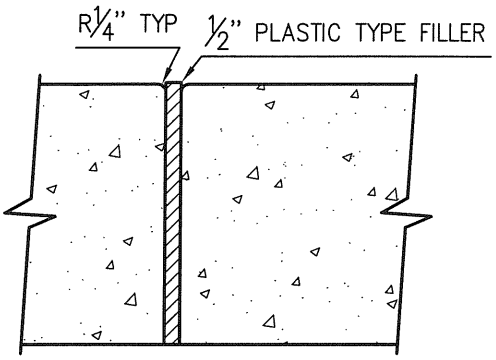


## WEAKENED PLANE JOINT

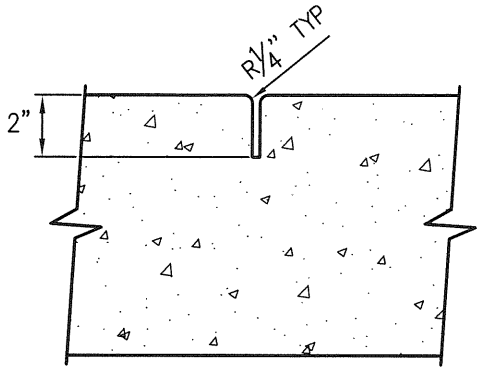


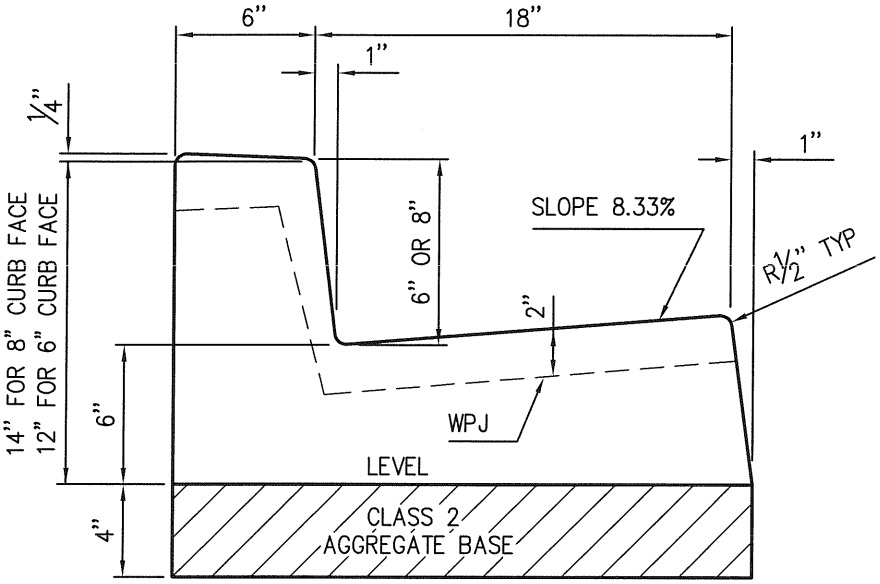


# STANDARD CURB & GUTTER

NOT TO SCALE

## NOTES:

1. CURB AND GUTTER SHALL BE CONSTRUCTED FROM PORTLAND CEMENT CONCRETE CONTAINING NOT LESS THAN 550 POUNDS OF TYPE II PORTLAND CEMENT PER CUBIC YARD WITH 4% AIR ENTRAINMENT AND 1" MAXIMUM AGGREGATE GRADING.
2. CONCRETE SHALL BE CURED WITH WHITE PIGMENTED CURING COMPOUND.
3. CURB AND GUTTER SHALL BE CONSTRUCTED ON MINIMUM 4" CLASS 2 AGGREGATE BASE COMPACTED TO 95% RELATIVE COMPACTION.
4. WEAKENED PLANE JOINTS SHALL BE CONSTRUCTED AT 10' INTERVALS.
5. WEAKENED PLANE JOINTS SHALL BE AT LEAST 2" DEEP.
6. EXPANSION JOINTS SHALL BE CONSTRUCTED AT ALL CURB RETURNS, DRIVEWAY APPROACHES AND AT 60' INTERVALS.
7. EXPANSION JOINTS SHALL BE 1/2" WIDE AND FILLED WITH PLASTIC TYPE FILLERS.

(NOTES CONTINUE ON SHEET 2)

| APPROVED BY CITY ENGINEER | | CITY OF VICTORVILLE - ENGINEERING DEPARTMENT | |
|---|---|---|---|
| DATE | SIGNATURE | STANDARD CURB & GUTTER | S-01 |
| 02/03/09 | J. McGlade | JOHN A. McGLADE, CITY ENGINEER | SHEET 1 OF 2 |

## NOTES:

8. IF EXISTING CURB AND GUTTER IS TO BE REMOVED, IT SHALL BE SCORED AT LEAST 1" DEEP WITH A CONCRETE SAW PRIOR TO REMOVAL. IF THE SAWCUT LINE IS CLOSER THAN 2' TO AN EXPANSION JOINT OR WEAKENED PLANE JOINT THE CURB AND GUTTER SHALL BE REMOVED TO THE EXPANSION OR WEAKENED PLANE JOINT.
9. GUTTER SHALL HAVE ROUGH BROOM FINISH WITH 2" SHINER AT FLOW LINE.

| APPROVED BY CITY ENGINEER | | CITY OF VICTORVILLE - ENGINEERING DEPARTMENT | |
|---|---|---|---|
| DATE | SIGNATURE | STANDARD CURB & GUTTER | S-01 |
| 02/03/09 | J. McGlade | JOHN A. McGLADE, CITY ENGINEER | SHEET 2 OF 2 |

## EXPANSION JOINT

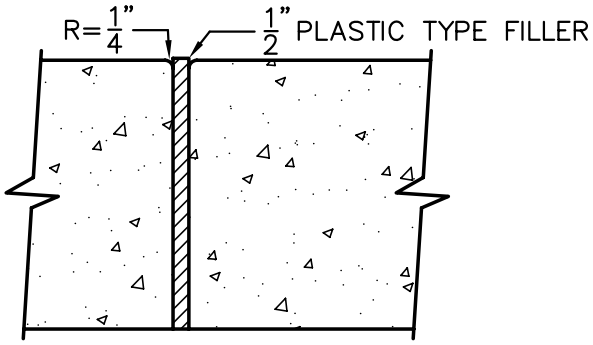


## WEAKENED PLANE JOINT

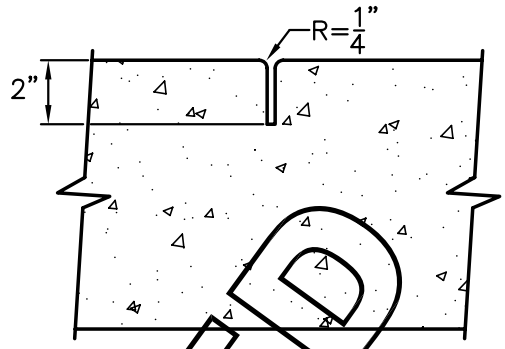


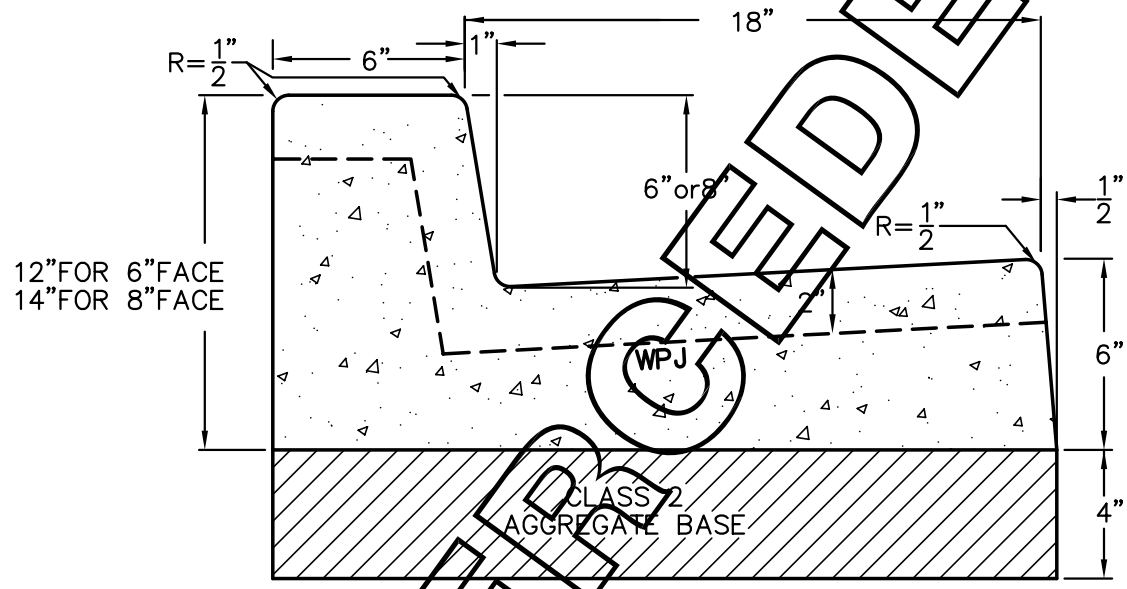


## STANDARD CURB & GUTTER

NOT TO SCALE

SUPERSEDED

## NOTES:

1. CURB AND GUTTER SHALL BE CONSTRUCTED FROM PORTLAND CEMENT CONCRETE CONTAINING NOT LESS THAN 550 POUNDS OF TYPE II PORTLAND CEMENT PER CUBIC YARD WITH 4% AIR ENTRAINMENT AND 1" MAXIMUM AGGREGATE GRADING.
2. CONCRETE SHALL BE CURED WITH WHITE PIGMENTED CURING COMPOUND.
3. CURB AND GUTTER SHALL BE CONSTRUCTED ON MINIMUM 4" CLASS 2 AGGREGATE BASE COMPACTED TO 95% RELATIVE COMPACTION.
4. WEAKENED PLANE JOINTS SHALL BE CONSTRUCTED AT 10' INTERVALS.
5. WEAKENED PLANE JOINTS SHALL BE AT LEAST 2" DEEP.
6. EXPANSION JOINTS SHALL BE CONSTRUCTED AT ALL CURB RETURNS, DRIVEWAY APPROACHES AND AT 60' INTERVALS.
7. EXPANSION JOINTS SHALL BE 1/2" WIDE AND FILLED WITH PLASTIC TYPE FILLERS.

(NOTES CONTINUE ON SHEET 2)

| CITY OF VICTORVILLE - ENGINEERING DEPARTMENT | | | | |
|---|---|---|---|---|
| REV. | DATE | BY | STANDARD CURB & GUTTER | S-01 |
| | 7/12/74 | X.X.S. | | |
| 1 | 6/1/07 | STAFF | JOHN A. McGLADE, CITY ENGINEER | SHEET 1 OF 2 |

## NOTES:

8. IF EXISTING CURB AND GUTTER IS TO BE REMOVED, IT SHALL BE SCORED AT LEAST 1" DEEP WITH A CONCRETE SAW PRIOR TO REMOVAL. IF THE SAWCUT LINE IS CLOSER THAN 2' TO AN EXPANSION JOINT OR WEAKENED PLANE JOINT THE CURB AND GUTTER SHALL BE REMOVED TO THE EXPANSION OR WEAKENED PLANE JOINT.
9. GUTTER SHALL HAVE ROUGH BROOM FINISH WITH 2" SHINER AT FLOW LINE.

SUPERCEDED

| CITY OF VICTORVILLE - ENGINEERING DEPARTMENT | | | | |
|---|---|---|---|---|
| REV. | DATE | BY | **STANDARD CURB & GUTTER** | **S-01** |
| | 7/12/74 | X.X.S. | | |
| 1 | 6/1/07 | STAFF | JOHN A. McGLADE, CITY ENGINEER | SHEET 2 OF 2 |

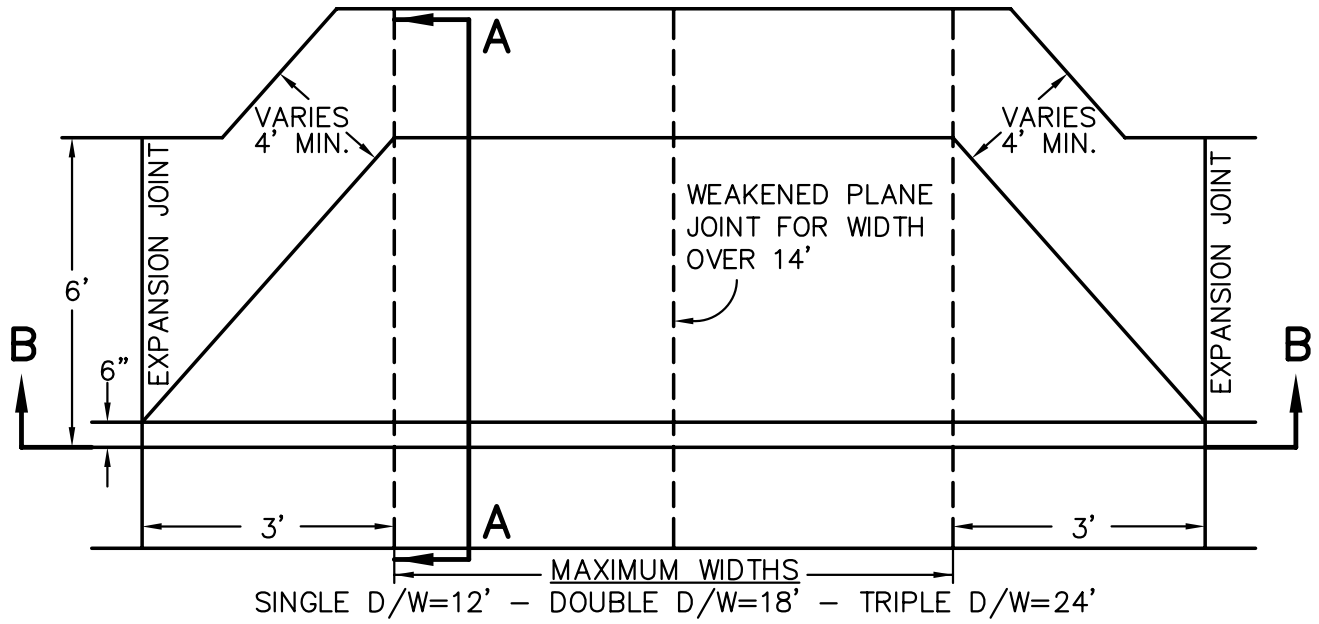


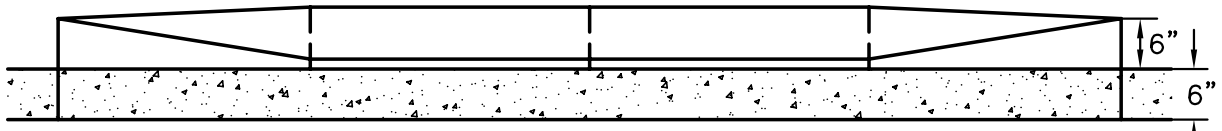


SECTION B–B

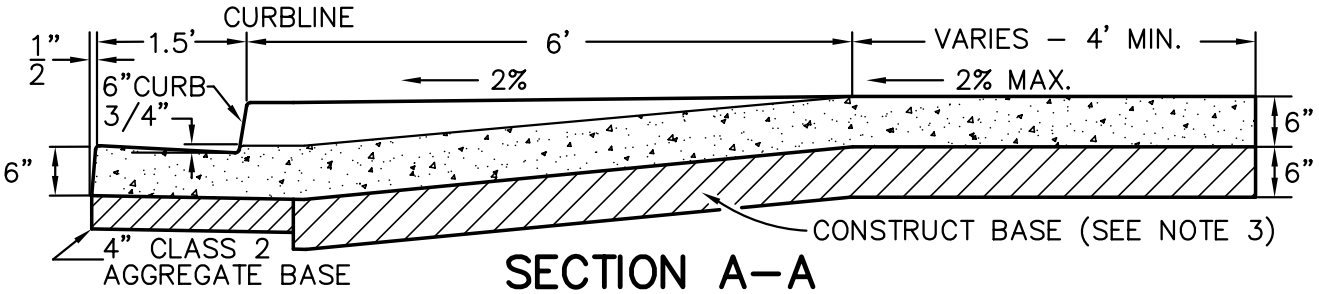


SECTION A–A

(N.T.S.)

## NOTES:

1. RESIDENTIAL DRIVE APPROACH SHALL BE CONSTRUCTED FROM PORTLAND CEMENT CONCRETE CONTAINING NOT LESS THAN 550 POUNDS OF TYPE II PORTLAND CEMENT PER CUBIC YARD WITH 4% AIR ENTRAINMENT AND 1" MAXIMUM AGGREGATE GRADING.
2. CONCRETE SHALL BE CURED WITH WHITE PIGMENTED CURING COMPOUND.
3. BASE SHALL CONSIST OF 6" NATIVE MATERIAL (MINIMUM "R" VALUE = 70) COMPACTED TO 90% RELATIVE COMPACTION. IF NATIVE MATERIAL IS CLAY OR CALICHE OR HAS AN "R" VALUE OF LESS THAN 70, CONSTRUCT 6" CLASS II AGGREGATE BASE COMPACTED TO 90% RELATIVE COMPACTION OR AS DIRECTED BY THE CITY ENGINEER.
4. WEAKENED PLANE JOINTS SHALL BE AT LEAST 2" DEEP.
5. EXPANSION JOINTS SHALL BE CONSTRUCTED AT BOTH ENDS OF DRIVEWAY APPROACHES.
6. EXPANSION JOINTS SHALL BE 1/2" WIDE AND FILLED WITH PLASTIC TYPE FILLERS.
7. RESIDENTIAL DRIVE APPROACH SHALL BE ALIGNED WITH GARAGE DOOR(S) OR CARPORT AND BE PERPENDICULAR TO THE CURB. SPECIAL CIRCUMSTANCES MAY APPLY TO THE BULB OF CUL–DE–SACS AND KNUCKLES (SEE S–02A).
8. RESIDENTIAL DRIVE APPROACH SHALL BE MEDIUM BROOM FINISH.

| CITY OF VICTORVILLE - ENGINEERING DEPARTMENT | | | | |
|---|---|---|---|---|
| REV. | DATE | BY | RESIDENTIAL DRIVE APPROACH | S-02 |
| | 7/8/74 | X.X.S. | | |
| 1 | 7/25/07 | STAFF | JOHN A. McGLADE, CITY ENGINEER | SHEET 1 OF 1 |

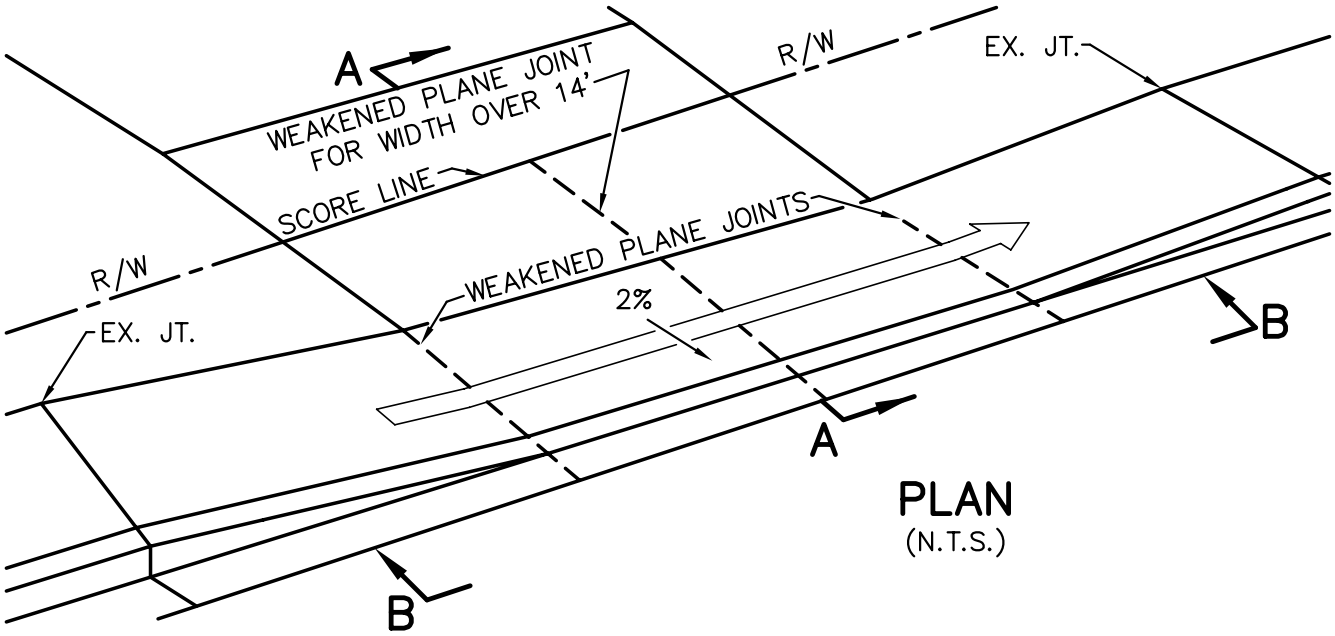


PLAN
(N.T.S.)

SECTION B–B

EXPANSION JOINT

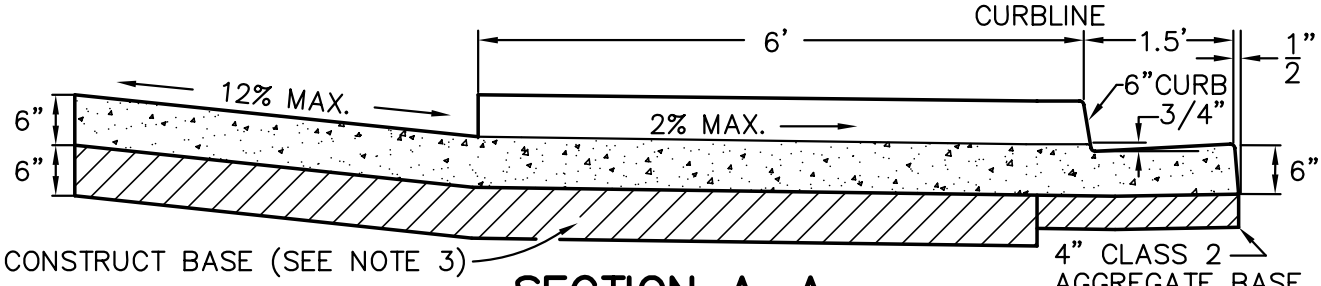


SECTION A–A

## NOTES:

1. RESIDENTIAL DRIVE APPROACH SHALL BE CONSTRUCTED FROM PORTLAND CEMENT CONCRETE CONTAINING NOT LESS THAN 550 POUNDS OF TYPE II PORTLAND CEMENT PER CUBIC YARD WITH 4% AIR ENTRAINMENT AND 1" MAXIMUM AGGREGATE GRADING.
2. CONCRETE SHALL BE CURED WITH WHITE PIGMENTED CURING COMPOUND.
3. BASE SHALL CONSIST OF 6" NATIVE MATERIAL (MINIMUM "R" VALUE = 70) COMPACTED TO 90% RELATIVE COMPACTION. IF NATIVE MATERIAL IS CLAY OR CALICHE OR HAS AN "R" VALUE OF LESS THAN 70, CONSTRUCT 6" CLASS II AGGREGATE BASE COMPACTED TO 90% RELATIVE COMPACTION OR AS DIRECTED BY THE CITY ENGINEER.
4. WEAKENED PLANE JOINTS SHALL BE AT LEAST 2" DEEP.
5. EXPANSION JOINTS SHALL BE CONSTRUCTED AT BOTH ENDS OF DRIVEWAY APPROACHES.
6. EXPANSION JOINTS SHALL BE 1/2" WIDE AND FILLED WITH PLASTIC TYPE FILLERS.
7. RESIDENTIAL DRIVE APPROACH SHALL BE ALIGNED WITH GARAGE DOOR(S) OR CARPORT AND BE PERPENDICULAR TO THE CURB.
8. RESIDENTIAL DRIVE APPROACH SHALL BE MEDIUM BROOM FINISH.

| CITY OF VICTORVILLE - ENGINEERING DEPARTMENT | | | | |
|---|---|---|---|---|
| REV. | DATE | BY | RESIDENTIAL DRIVE APPROACH FOR CUL-DE-SAC OR KNUCKLE | S-02A |
| | 7/8/74 | X.X.S. | | |
| 1 | 7/25/07 | STAFF | JOHN A. McGLADE, CITY ENGINEER | SHEET 1 OF 1 |

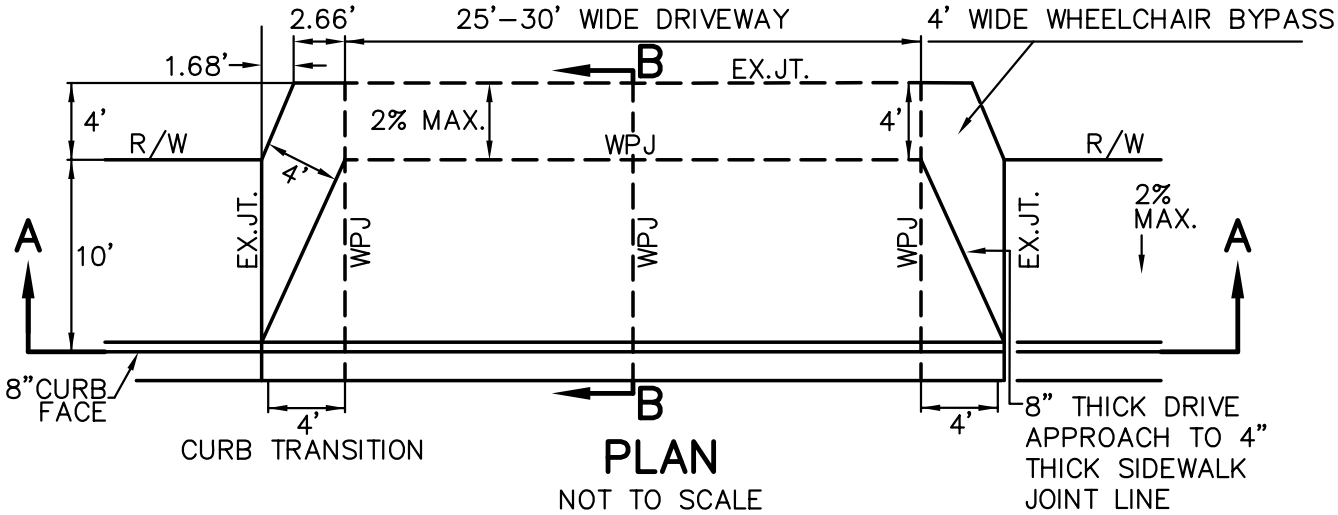


PLAN

NOT TO SCALE

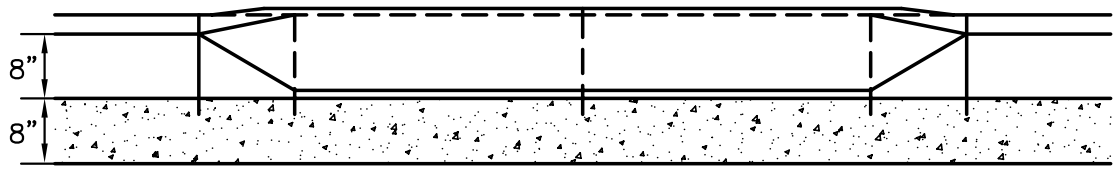


SECTION A–A

NOT TO SCALE

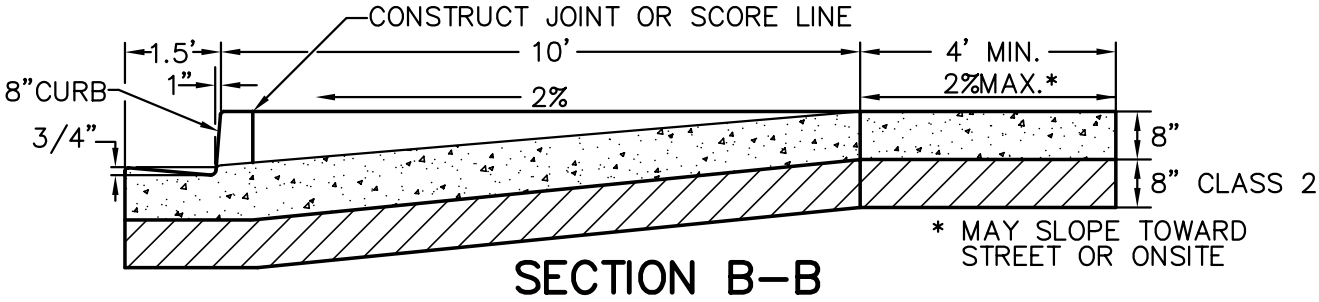


SECTION B–B

NOT TO SCALE

## NOTES:

1. COMMERCIAL DRIVE APPROACH SHALL BE CONSTRUCTED FROM PORTLAND CEMENT CONCRETE CONTAINING NOT LESS THAN 550 POUNDS OF TYPE II PORTLAND CEMENT PER CUBIC YARD WITH 4% AIR ENTRAINMENT AND 1" MAXIMUM AGGREGATE GRADING.
2. CONCRETE SHALL BE CURED WITH WHITE PIGMENTED CURING COMPOUND.
3. COMMERCIAL DRIVE APPROACH SHALL BE CONSTRUCTED ON MINIMUM 8" CLASS 2 AGGREGATE BASE COMPACTED TO 95% RELATIVE COMPACTION.
4. WEAKENED PLANE JOINTS SHALL BE AT LEAST 2" DEEP.
5. EXPANSION JOINTS SHALL BE CONSTRUCTED AT BOTH ENDS OF DRIVEWAY APPROACHES.
6. EXPANSION JOINTS SHALL BE 1/2" WIDE AND FILLED WITH PLASTIC TYPE FILLERS.
7. COMMERCIAL DRIVE APPROACH SHALL BE MEDIUM BROOM FINISH.

| CITY OF VICTORVILLE - ENGINEERING DEPARTMENT | | | | |
|---|---|---|---|---|
| REV. | DATE | BY | STANDARD COMMERCIAL DRIVE APPROACH (TYPE 1) | S-03 |
| | 2/12/93 | D.G.H. | | |
| 1 | 6/1/07 | STAFF | JOHN A. McGLADE, CITY ENGINEER | SHEET 1 OF 3 |

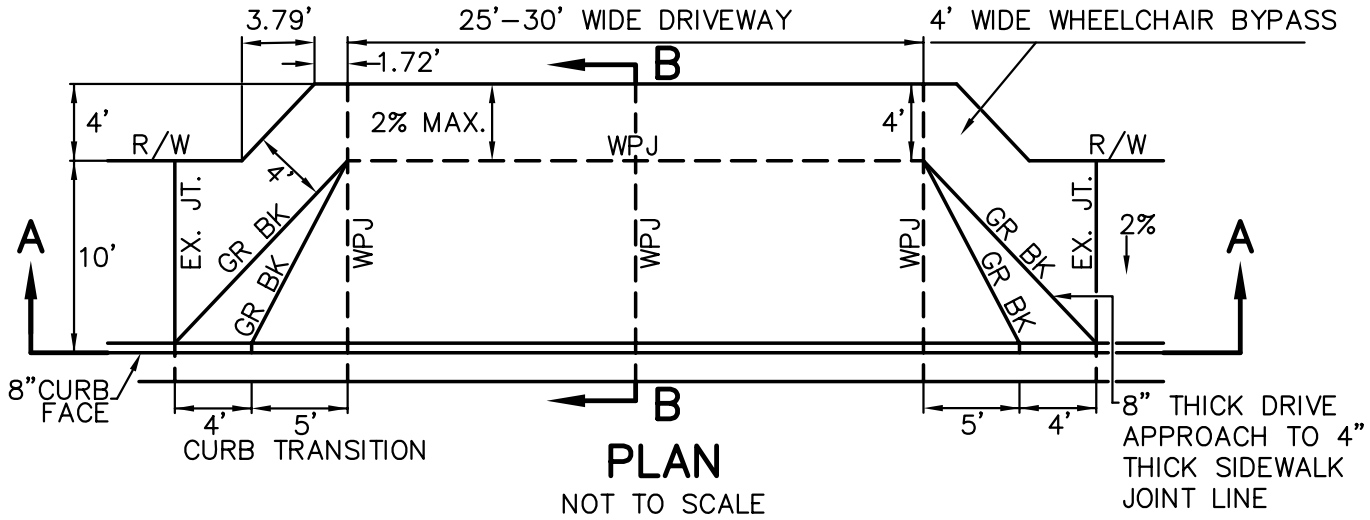


## PLAN

NOT TO SCALE

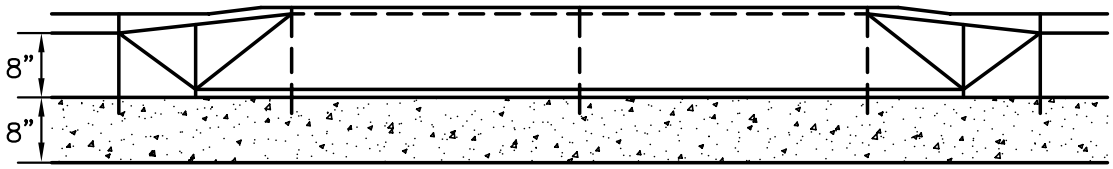


## SECTION A–A

NOT TO SCALE

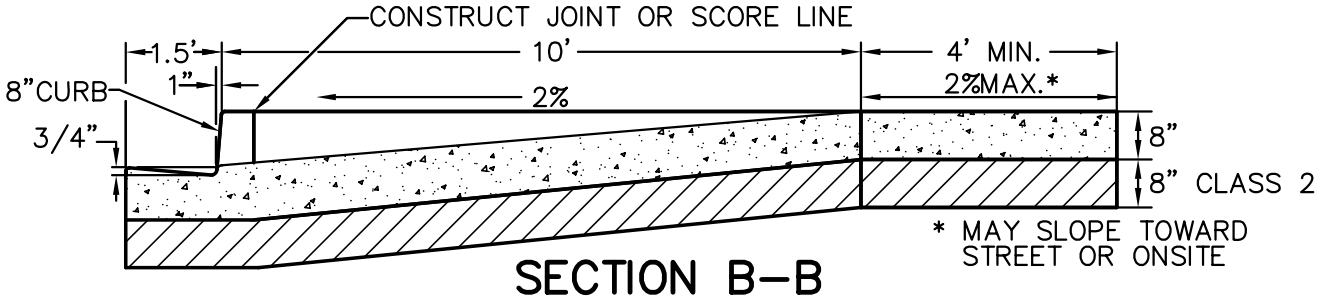


## SECTION B–B

NOT TO SCALE

## NOTES:

1. COMMERCIAL DRIVE APPROACH SHALL BE CONSTRUCTED FROM PORTLAND CEMENT CONCRETE CONTAINING NOT LESS THAN 550 POUNDS OF TYPE II PORTLAND CEMENT PER CUBIC YARD WITH 4% AIR ENTRAINMENT AND 1" MAXIMUM AGGREGATE GRADING.
2. CONCRETE SHALL BE CURED WITH WHITE PIGMENTED CURING COMPOUND.
3. COMMERCIAL DRIVE APPROACH SHALL BE CONSTRUCTED ON MINIMUM 8" CLASS 2 AGGREGATE BASE COMPACTED TO 95% RELATIVE COMPACTION.
4. WEAKENED PLANE JOINTS SHALL BE AT LEAST 2" DEEP.
5. EXPANSION JOINTS SHALL BE CONSTRUCTED AT BOTH ENDS OF DRIVEWAY APPROACHES.
6. EXPANSION JOINTS SHALL BE 1/2" WIDE AND FILLED WITH PLASTIC TYPE FILLERS.
7. COMMERCIAL DRIVE APPROACH SHALL BE MEDIUM BROOM FINISH.

| CITY OF VICTORVILLE - ENGINEERING DEPARTMENT | | | | |
|---|---|---|---|---|
| REV. | DATE | BY | FLARED CURB COMMERCIAL DRIVE APPROACH (TYPE 2) | S-03 |
| | 2/12/93 | D.G.H. | | |
| 1 | 7/25/07 | STAFF | JOHN A. McGLADE, CITY ENGINEER | SHEET 2 OF 3 |

| R | W** |
|---|---|
| 20' | 30'–40' |

**MAY BE WIDER WHEN ADDITIONAL LANES ARE JUSTIFIED AND WITH CITY ENGINEER'S APPROVAL

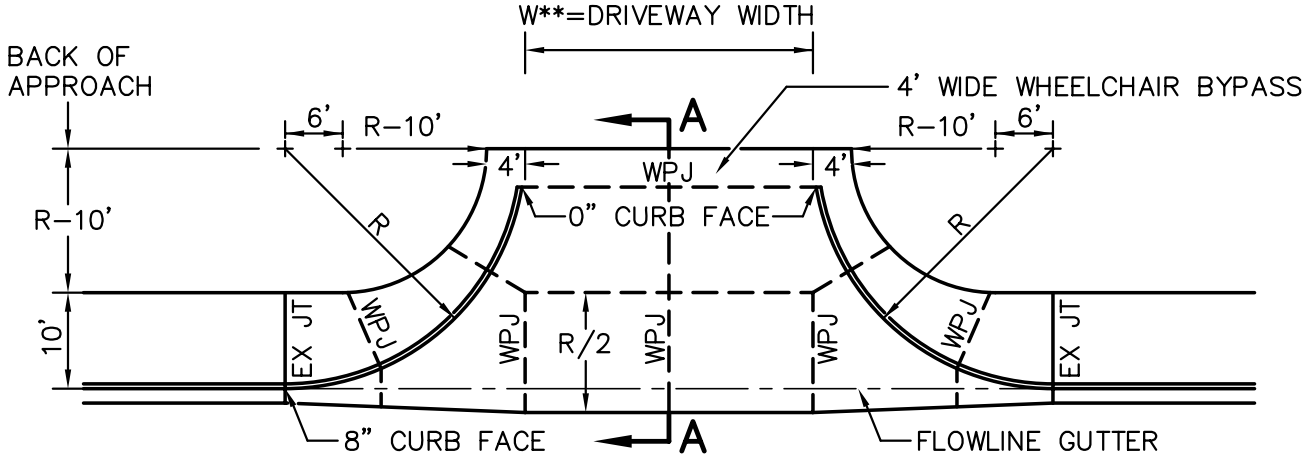


## PLAN

NOT TO SCALE

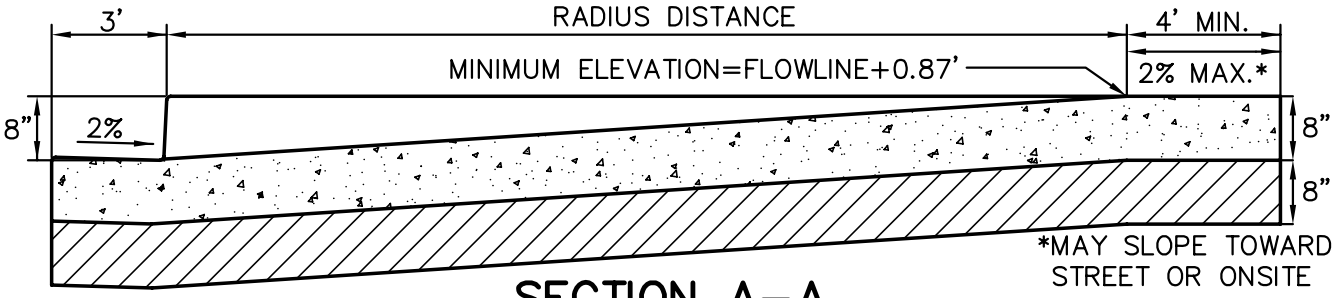


## SECTION A–A

NOT TO SCALE

## NOTES:

1. COMMERCIAL DRIVE APPROACH SHALL BE CONSTRUCTED FROM PORTLAND CEMENT CONCRETE CONTAINING NOT LESS THAN 550 POUNDS OF TYPE II PORTLAND CEMENT PER CUBIC YARD WITH 4% AIR ENTRAINMENT AND 1" MAXIMUM AGGREGATE GRADING.
2. CONCRETE SHALL BE CURED WITH WHITE PIGMENTED CURING COMPOUND.
3. COMMERCIAL DRIVE APPROACH SHALL BE CONSTRUCTED ON MINIMUM 8" CLASS 2 AGGREGATE BASE COMPACTED TO 95% RELATIVE COMPACTION.
4. WEAKENED PLANE JOINTS SHALL BE AT LEAST 2" DEEP.
5. EXPANSION JOINTS SHALL BE CONSTRUCTED AT BOTH ENDS OF DRIVEWAY APPROACHES.
6. EXPANSION JOINTS SHALL BE 1/2" WIDE AND FILLED WITH PLASTIC TYPE FILLERS.
7. COMMERCIAL DRIVE APPROACH SHALL BE MEDIUM BROOM FINISH.

| CITY OF VICTORVILLE - ENGINEERING DEPARTMENT | | | | |
|---|---|---|---|---|
| REV. | DATE | BY | CURB RETURN COMMERCIAL DRIVE APPROACH (TYPE 3) | S-03 |
| | 2/12/93 | D.G.H. | | |
| 1 | 6/1/07 | STAFF | JOHN A. McGLADE, CITY ENGINEER | SHEET 3 OF 3 |

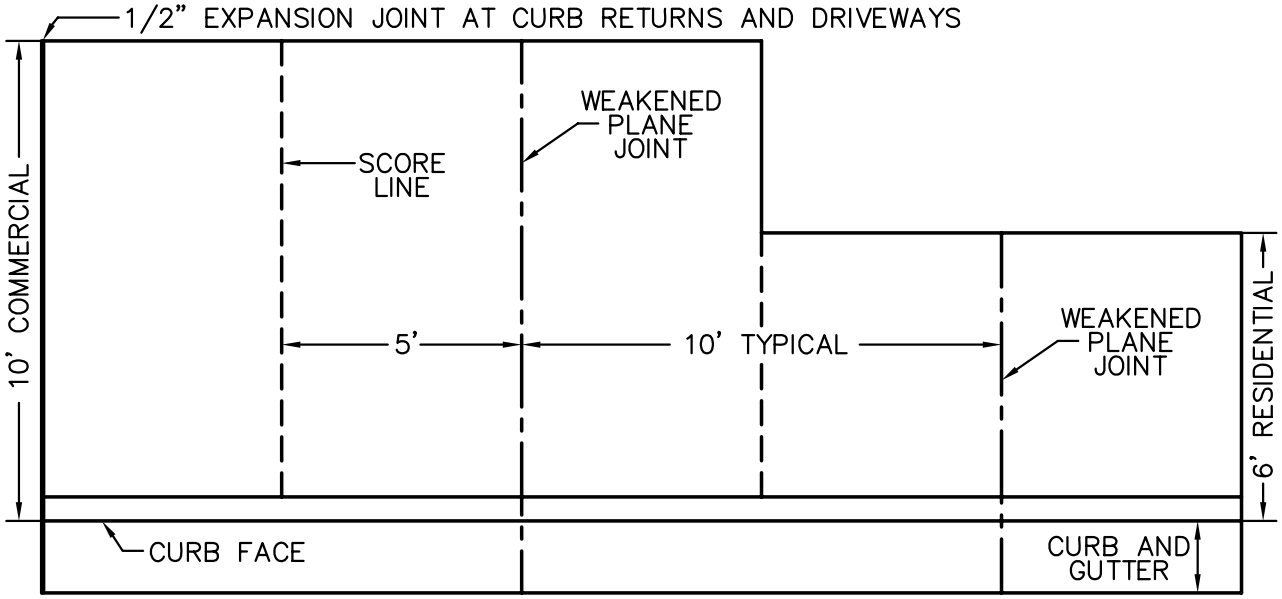


## PLAN

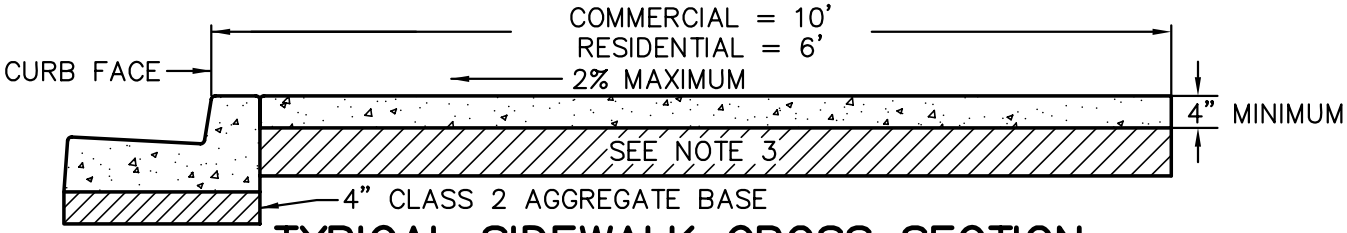


## TYPICAL SIDEWALK CROSS SECTION

## NOTES:

1. SIDEWALK SHALL BE CONSTRUCTED FROM PORTLAND CEMENT CONCRETE CONTAINING NOT LESS THAN 550 POUNDS OF TYPE II PORTLAND CEMENT PER CUBIC YARD WITH 4% AIR ENTRAINMENT AND 1" MAXIMUM AGGREGATE GRADING.
2. CONCRETE SHALL BE CURED WITH WHITE PIGMENTED CURING COMPOUND.
3. BASE SHALL CONSIST OF 6" NATIVE MATERIAL (MINIMUM "R" VALUE = 70) COMPACTED TO 90% RELATIVE COMPACTION. IF NATIVE MATERIAL IS CLAY OR CALICHE OR HAS AN "R" VALUE OF LESS THAN 70, CONSTRUCT 4" CLASS II AGGREGATE BASE COMPACTED TO 90% RELATIVE COMPACTION OR AS DIRECTED BY THE CITY ENGINEER.
4. ON STRAIGHT RUN SIDEWALK, WEAKENED PLANE JOINTS SHALL BE INSTALLED ON 10' CENTERS. SIDEWALK SHALL BE SCORED ON 5' CENTERS.
5. WEAKENED PLANE JOINTS SHALL BE AT LEAST 2" DEEP.
6. EXPANSION JOINTS SHALL BE CONSTRUCTED AT ALL CURB RETURNS, DRIVEWAY APPROACHES AND AT 60' INTERVALS.
7. EXPANSION JOINTS SHALL BE 1/2" WIDE AND FILLED WITH PLASTIC TYPE FILLERS.
8. IF EXISTING SIDEWALK IS TO BE REMOVED, IT SHALL BE SCORED AT LEAST 1" DEEP WITH A CONCRETE SAW PRIOR TO REMOVAL. IF THE SAWCUT LINE IS CLOSER THAN 2' TO A SCORE LINE, WEAKENED PLANE JOINT OR EXPANSION JOINT, THE REMOVAL SHALL BE AS A PANEL TO THE NEAREST SCORE LINE OR JOINT.
9. SIDEWALK SHALL BE LIGHT BROOM FINISH.
10. SIDEWALK SHALL BE WIDENED LOCALLY TO PROVIDE A MINIMUM OF 4' CLEAR OF OBSTRUCTIONS IN THE SIDEWALK SUCH AS UTILITY POLES, STREET LIGHTS, FIRE HYDRANTS, ETC.

| CITY OF VICTORVILLE - ENGINEERING DEPARTMENT | | | | |
|---|---|---|---|---|
| REV. | DATE | BY | STANDARD COMMERCIAL AND RESIDENTIAL SIDEWALK | S-04 |
| | 12/21/88 | C.M.D. | | |
| 1 | 7/25/07 | STAFF | JOHN A. McGLADE, CITY ENGINEER | SHEET 1 OF 1 |

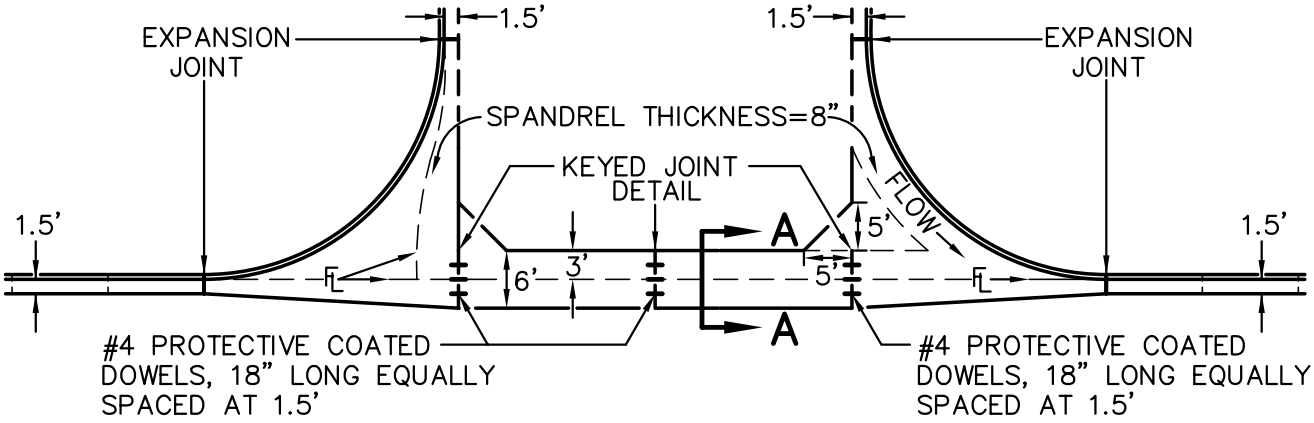


## CROSS GUTTER

NOT TO SCALE

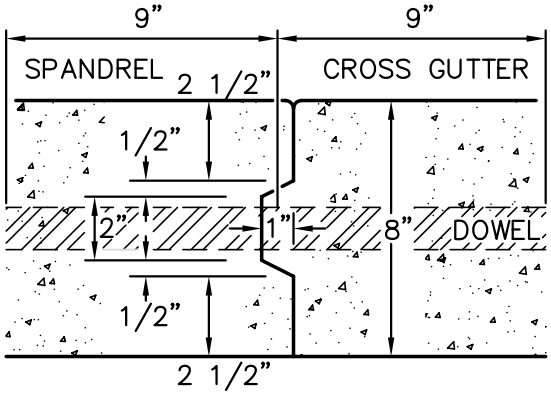


## KEYED JOINT DETAIL

NOT TO SCALE

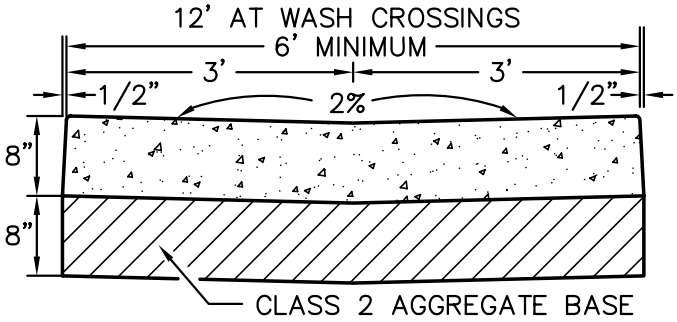


## SECTION A–A

NOT TO SCALE

## NOTES:

1. CROSS GUTTER SHALL BE CONSTRUCTED FROM PORTLAND CEMENT CONCRETE CONTAINING NOT LESS THAN 550 POUNDS OF TYPE II PORTLAND CEMENT PER CUBIC YARD WITH 4% AIR ENTRAINMENT AND 1" MAXIMUM AGGREGATE GRADING.
2. CONCRETE SHALL BE CURED WITH WHITE PIGMENTED CURING COMPOUND.
3. CROSS GUTTER SHALL BE CONSTRUCTED ON MINIMUM 8" CLASS 2 AGGREGATE BASE COMPACTED TO 95% RELATIVE COMPACTION.
4. CROSS GUTTER SHALL BE ROUGH BROOM FINISH.

| CITY OF VICTORVILLE - ENGINEERING DEPARTMENT | | | | |
|---|---|---|---|---|
| REV. | DATE | BY | **STANDARD CROSS GUTTER** | **S-05** |
| | 7/3/74 | X.X.S. | | |
| 1 | 6/1/07 | STAFF | JOHN A. McGLADE, CITY ENGINEER | SHEET 1 OF 1 |

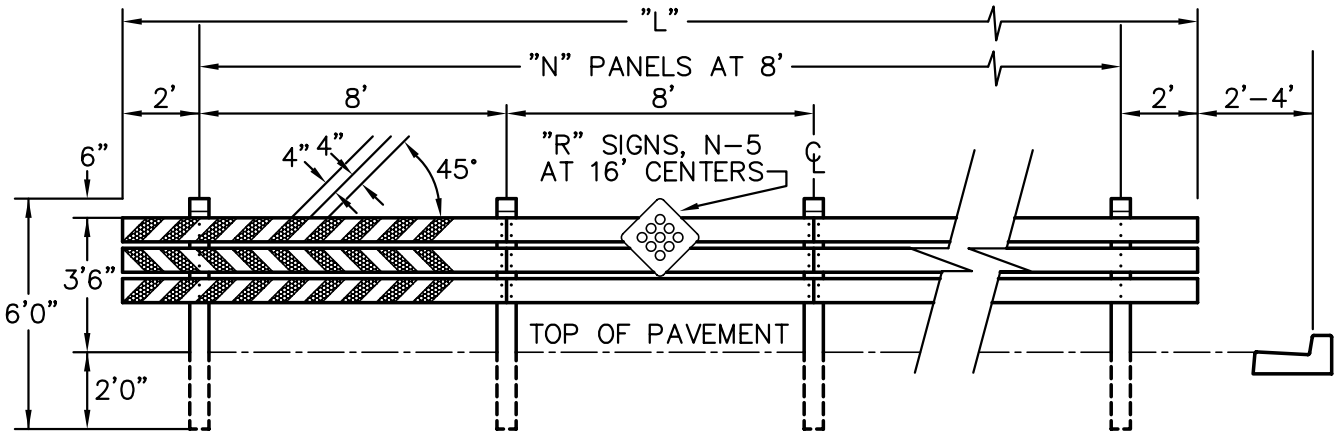


## ELEVATION

NOT TO SCALE

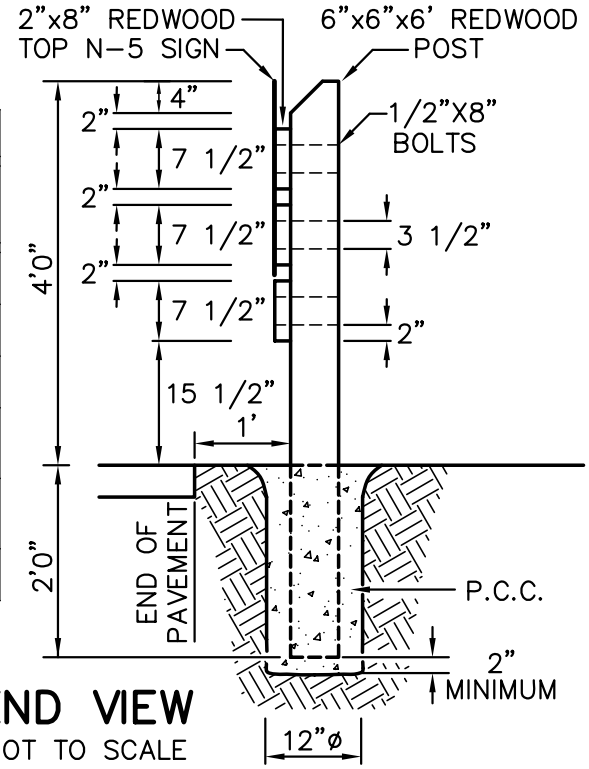


## END VIEW

NOT TO SCALE

| TABLE OF BARRICADES | | | | |
|---|---|---|---|---|
| ROADWAY TYPE | WIDTH FEET | # SECTIONS "N" | LENGTH* "L" | REFLECTORS "R" |
| LOCAL ST. | 40' | 4 | 36' | 2 |
| COLLECTOR | 44' | 4 | 36' | 2 |
| ARTERIAL | 64' | 7 | 60' | 3 |
| MAJOR ARTERIAL | 80' | 9 | 76' | 4 |
| SUPER ARTERIAL | 104' | 12 | 100' | 6 |
| PARKWAY | 80' | 9 | 76' | 4 |

*OR AS SHOWN ON PLANS AND DIRECTED BY THE CITY ENGINEER.

## NOTES:

1. BARRICADES SHALL BE CONSTRUCTED WITH REDWOOD PER THE DETAILS. HARDWARE SHALL BE CADMIUM PLATED WITH 2 EACH 1/2"X8" LONG BOLTS WITH WASHERS ON BOTH SIDES AND NUTS TO FASTEN EACH END OF 2"X8" BOARD TO POSTS.
2. REDWOOD POSTS TO BE SET IN 12" HOLES BACKFILLED WITH CLASS C, CONCRETE (4 SACKS PER CUBIC YARD) TO GRADE.
3. MUSHROOM THREADED BOLT ENDS TO PREVENT TAMPERING.
4. ALL EXPOSED WOOD SHALL BE PRIMED AND PAINTED WITH A LATEX-BASE WHITE PAINT. PAINT SHALL CONFORM TO CALTRANS SECTION 91-3. REFLECTIVE TAPE SHALL BE USED ON THE FACE FOR THE ORANGE AND WHITE STRIPING AS SHOWN.
5. N-5 SIGNS SHALL USE REFLECTIVE TAPE INSTEAD OF REFLECTORS.

| CITY OF VICTORVILLE - ENGINEERING DEPARTMENT | | | | |
|---|---|---|---|---|
| REV. | DATE | BY | **BARRICADE DETAILS** | **S-06** |
| | 12/11/89 | R.D. | | |
| 1 | 6/1/07 | STAFF | JOHN A. McGLADE, CITY ENGINEER | SHEET 1 OF 1 |

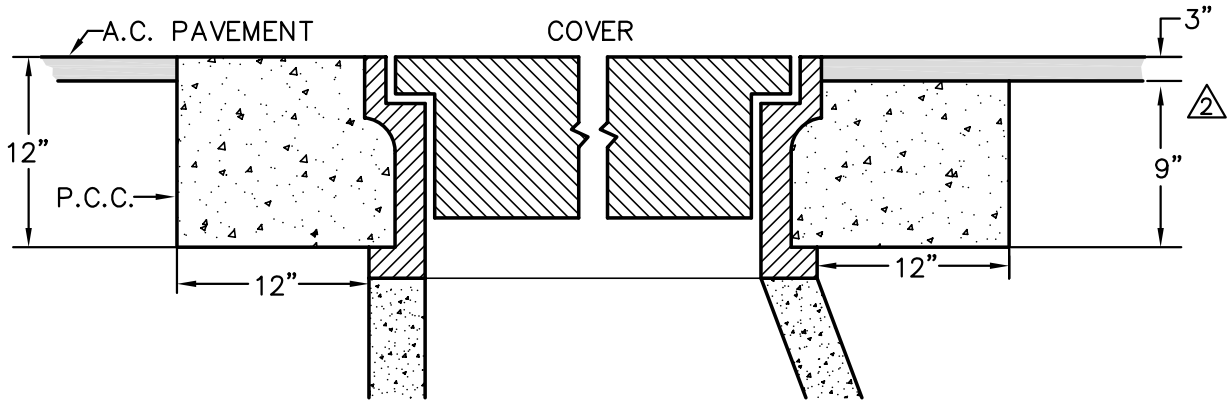


## MANHOLE

NOT TO SCALE

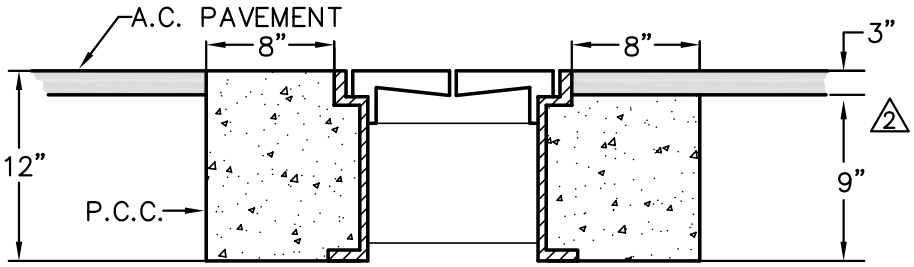


## CLEAN–OUT

NOT TO SCALE

## NOTES:

1. CONCRETE SHALL CONTAIN NOT LESS THAN 550 POUNDS OF CEMENTITIOUS MATERIAL PER CUBIC YARD WITH 4% AIR ENTRAINMENT. 1
2. MANHOLE AND CLEAN–OUT FRAMES SHALL BE ADJUSTED TO GRADE AFTER PLACING SURFACE COURSE OF ASPHALT CONCRETE OR, IF A.C. CAP IS TO BE PLACED OVER CONCRETE RING, THE FRAMES SHALL BE ADJUSTED TO GRADE PRIOR TO PLACING A.C. SURFACE COURSE. FRAMES IN P.C.C. PAVEMENT SHALL BE ADJUSTED TO GRADE JUST PRIOR TO P.C.C. PLACEMENT. 2
3. MANHOLE AND CLEAN–OUT FRAMES SHALL NOT BE MORE THAN 1/4" OUT OF LEVEL WITH PAVEMENT SURFACE.
4. WHEN ADJUSTING MANHOLE OR CLEAN–OUT TO GRADE THE CONTRACTOR SHALL NOT INTERRUPT THE SERVICE FUNCTION OF THE LINE UNLESS OTHERWISE APPROVED BY THE ENGINEER PRIOR TO SUCH WORK. FURTHER THE CONTRACTOR SHALL IMPLEMENT MEASURES TO PREVENT DEBRIS AND FOREIGN MATERIALS FROM ENTERING THE PIPELINE SYSTEM. 3

| REV. | DATE | BY |
|---|---|---|
| | 10/2/68 | M.A.T. |
| 1 | 7/74 | X.X.S. |
| 2 | 4/5/93 | D.G.H. |
| 3 | 9/9/96 | J.A.M. |
| 4 | 7/25/07 | STAFF |

**CITY OF VICTORVILLE - ENGINEERING DEPARTMENT**

**STANDARD MANHOLE / CLEAN-OUT FRAME AND COVER INSTALLATION**

**S-07**

JOHN A. McGLADE, CITY ENGINEER

SHEET 1 OF 1

# BLANK INTENTIONALLY

| CITY OF VICTORVILLE - ENGINEERING DEPARTMENT | | | | |
|---|---|---|---|---|
| REV. | DATE | BY | SLOTTED CROSS GUTTER | S-08 |
| | 7/11/74 | X.X.S. | | |
| 1 | 6/1/07 | STAFF | JOHN A. McGLADE, CITY ENGINEER | SHEET 1 OF 1 |

OBSOLETE

## EXPANSION JOINT

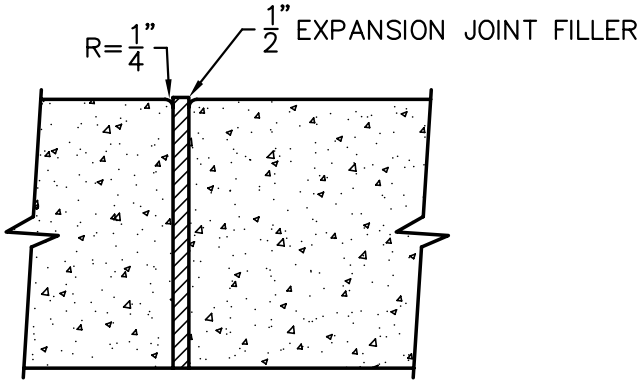


## WEAKENED PLANE JOINT

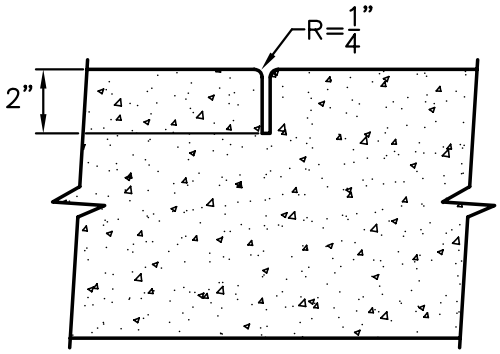


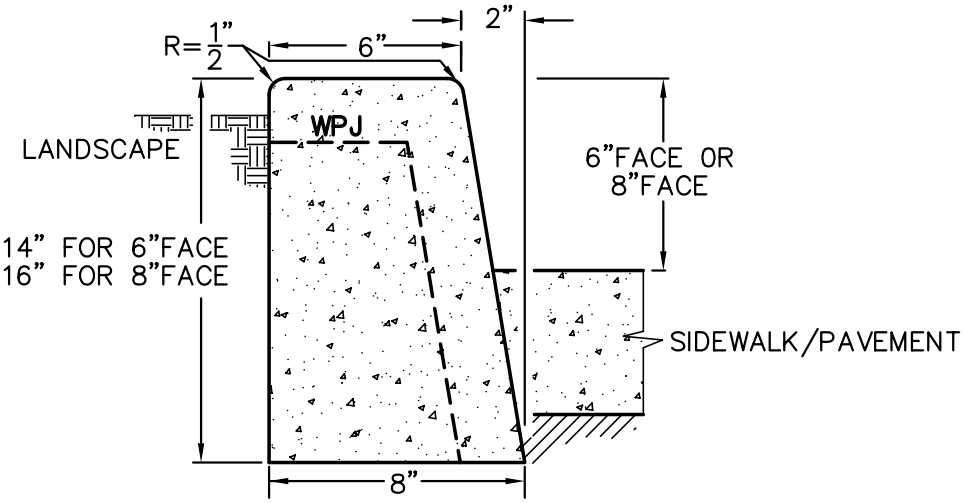


# STANDARD CURB

NOT TO SCALE

## NOTES:

1. CURB SHALL BE CONSTRUCTED FROM PORTLAND CEMENT CONCRETE CONTAINING NOT LESS THAN 550 POUNDS OF TYPE II PORTLAND CEMENT PER CUBIC YARD WITH 4% AIR ENTRAINMENT AND 1" MAXIMUM AGGREGATE GRADING.
2. CONCRETE SHALL BE CURED WITH WHITE PIGMENTED CURING COMPOUND.
3. WHEN USED ADJACENT TO VEHICULAR TRAFFIC, CURB SHALL BE CONSTRUCTED ON MINIMUM 4" CLASS 2 AGGREGATE BASE COMPACTED TO 95% RELATIVE COMPACTION.
4. WEAKENED PLANE JOINTS SHALL BE CONSTRUCTED AT 10' INTERVALS.
5. WEAKENED PLANE JOINTS SHALL BE AT LEAST 2" DEEP.
6. EXPANSION JOINTS SHALL BE CONSTRUCTED AT ALL CURB RETURNS, DRIVEWAY APPROACHES AND AT 60' INTERVALS.
7. EXPANSION JOINTS SHALL BE 1/2" WIDE AND FILLED WITH PLASTIC TYPE FILLERS.
8. IF EXISTING CURB IS TO BE REMOVED, IT SHALL BE SCORED AT LEAST 1" DEEP WITH A CONCRETE SAW PRIOR TO REMOVAL. IF THE SAWCUT LINE IS CLOSER THAN 2' TO A WEAKENED PLANE JOINT OR EXPANSION JOINT, THE CURB SHALL BE REMOVED TO THE WEAKENED PLANE JOINT OR EXPANSION JOINT.

| CITY OF VICTORVILLE - ENGINEERING DEPARTMENT | | | | |
|---|---|---|---|---|
| REV. | DATE | BY | **STANDARD CURB** | **S-09** |
| | 7/8/74 | X.X.S. | | |
| 1 | 6/1/07 | STAFF | JOHN A. McGLADE, CITY ENGINEER | SHEET 1 OF 1 |

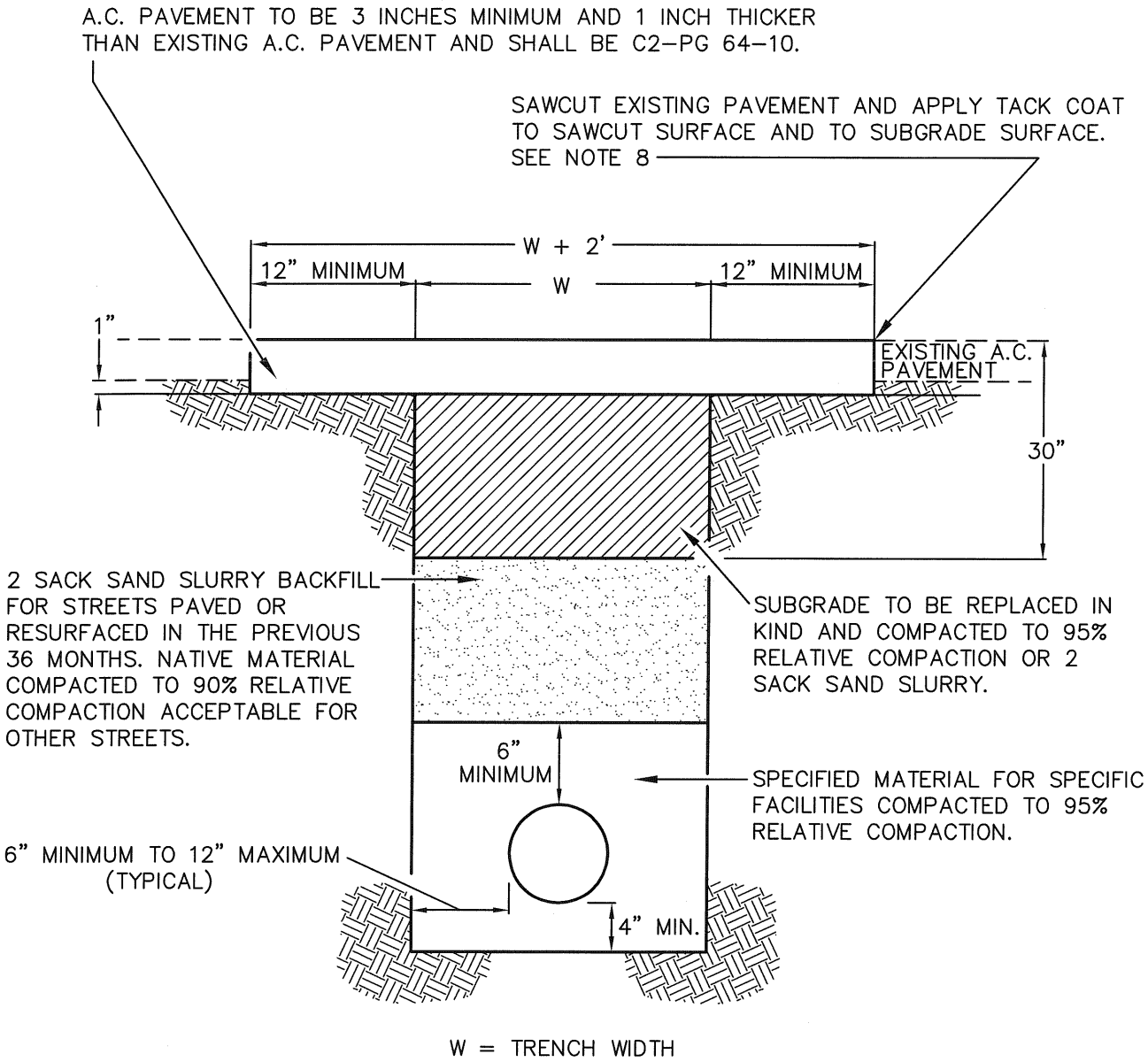


W = TRENCH WIDTH

# TYPICAL SECTION

NOT TO SCALE

| APPROVED BY CITY ENGINEER | | CITY OF VICTORVILLE - ENGINEERING DEPARTMENT | |
|---|---|---|---|
| DATE | SIGNATURE | **TRENCH BACKFILL AND PAVEMENT REPAIRS** | **S-10** |
| 02/03/09 | J. McG | JOHN A. McGLADE, CITY ENGINEER | SHEET 1 OF 2 |

## NOTES:

1. ALL EXCAVATIONS WITHIN THE CITY RIGHT-OF-WAY REQUIRE AN EXCAVATION PERMIT FROM THE ENGINEERING DEPARTMENT.
2. NOTIFY UNDERGROUND SERVICE ALERT (DigAlert) 2 WORKING DAYS PRIOR TO START OF EXCAVATION AT 1-800-227-2600.
3. NOTIFY ENGINEERING DEPARTMENT 1 WORKING DAY (24 HOURS) PRIOR TO START OF CONSTRUCTION TO ARRANGE INSPECTIONS BY CITY PUBLIC WORKS INSPECTORS.
4. ALL EXCAVATIONS SHALL BE MADE, PROTECTED AND SUPPORTED AS REQUIRED FOR SAFETY AS PRESCRIBED BY CAL OSHA.
5. TEMPORARY PAVING SHALL BE 2 SACK SAND SLURRY OR 2 INCH THICKNESS TEMPORARY ASPHALT OVER COMPACTED SUBGRADE TO TOP OF PAVEMENT TO PROVIDE A SAFE AND SMOOTH TRAVELED SURFACE. PERMANENT PAVING SHALL BE PLACED WITHIN 7 DAYS OF EXCAVATION. SEAL COAT PAVEMENT 6 INCHES BEYOND PAVEMENT REPAIR AREA.
6. ANY STREET PAVED OR RESURFACED IN THE PREVIOUS 36 MONTHS THAT IS TRENCHED FOR 300 FEET OR MORE IN A TRAVELED LANE OR EXTENDS MORE THAN 7 FEET FROM THE CURB FACE / EDGE OF PAVEMENT OR HAS MORE THAN 3 CROSS TRENCHES IN 300 FEET SHALL BE OVERLAID AS DIRECTED BY THE ENGINEER WITH A SELF PROPELLED PAVING MACHINE PER CALTRANS SECTION 39.
7. POT HOLES AND/OR NARROW TRENCH CUTS SHALL NOT BE ALLOWED IN P.C.C. IMPROVEMENTS. P.C.C. SHALL BE SAWCUT, REMOVED AND RECONSTRUCTED IN PANELS AT THE SCORE LINES, OR WEAKENED PLANE JOINTS, OR AT LEAST 10 FEET WIDE AND AS DIRECTED BY THE ENGINEER IN THE FIELD.
8. IF THE EDGE OF THE TRENCH REPAIR (W+2 FEET) IS 2 FEET OR LESS FROM THE LIP OF THE GUTTER OR 3' OR LESS FROM THE EDGE OF PAVEMENT, THE EXISTING PAVEMENT SHALL BE REMOVED AND REPLACED PER THE TYPICAL SECTION.
9. FOR NOMINAL PIPE DIAMETERS OF 12" OR LESS, TYPICAL COVER IS 36" UNLESS CIRCUMSTANCES WARRANT DIFFERENTLY OR OTHERWISE APPROVED BY THE CITY ENGINEER.

| APPROVED BY CITY ENGINEER | | CITY OF VICTORVILLE - ENGINEERING DEPARTMENT | |
|---|---|---|---|
| DATE | SIGNATURE | TRENCH BACKFILL AND PAVEMENT REPAIRS | S-10 |
| 02/03/09 | J. McGlade | JOHN A. McGLADE, CITY ENGINEER | SHEET 2 OF 2 |

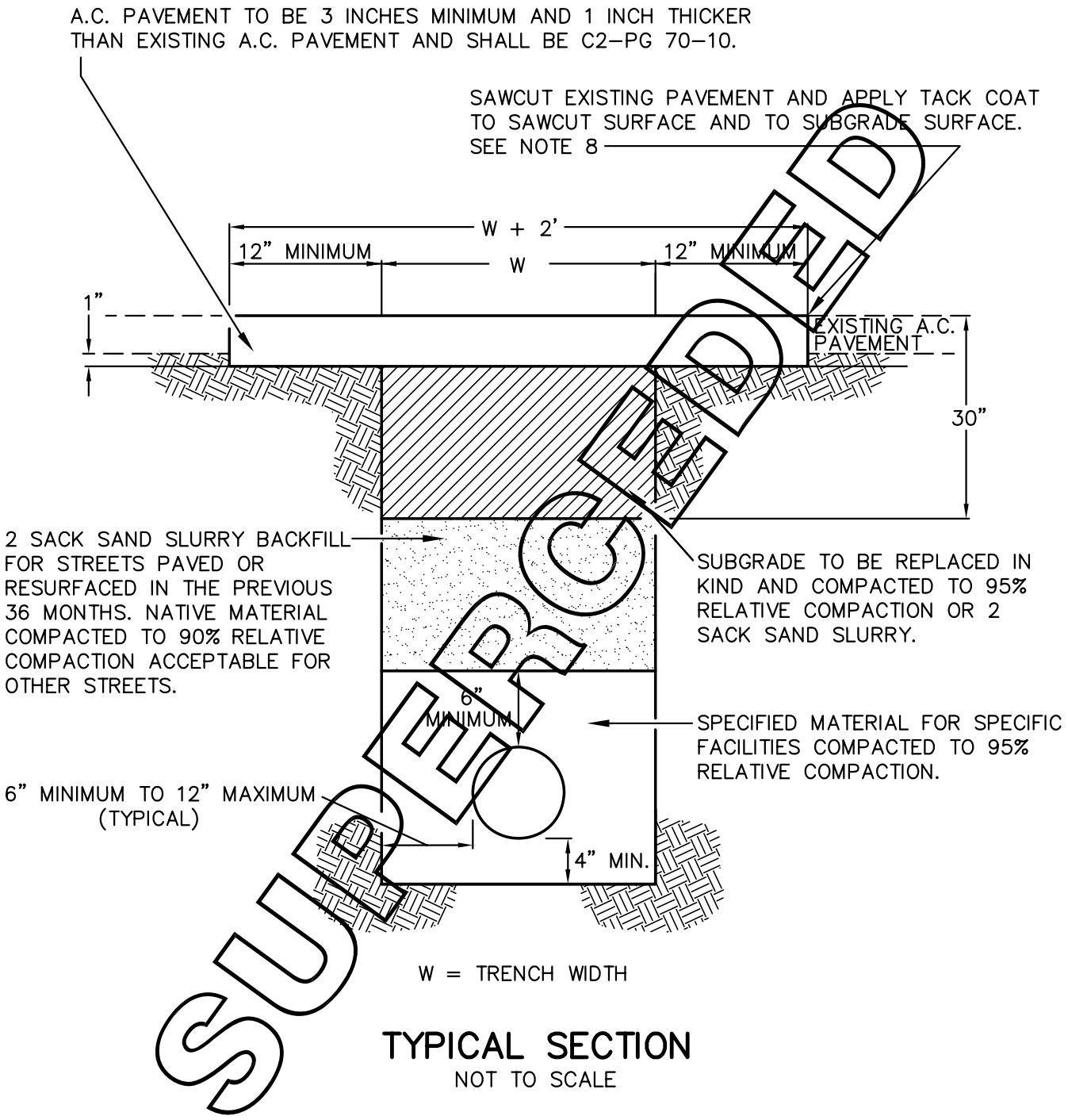


SUPERSEDED

## TYPICAL SECTION

NOT TO SCALE

| CITY OF VICTORVILLE - ENGINEERING DEPARTMENT | | | | |
|---|---|---|---|---|
| REV. | DATE | BY | **TRENCH BACKFILL AND PAVEMENT REPAIRS** | **S-10** |
| | 9/11/89 | Dablo | | |
| 1 | 6/1/07 | STAFF | JOHN A. McGLADE, CITY ENGINEER | SHEET 1 OF 2 |

## NOTES:

1. ALL EXCAVATIONS WITHIN THE CITY RIGHT-OF-WAY REQUIRE AN EXCAVATION PERMIT FROM THE ENGINEERING DEPARTMENT.
2. NOTIFY UNDERGROUND SERVICE ALERT (DigAlert) 2 WORKING DAYS PRIOR TO START OF EXCAVATION AT 1-800-227-2600.
3. NOTIFY ENGINEERING DEPARTMENT 1 WORKING DAY (24 HOURS) PRIOR TO START OF CONSTRUCTION TO ARRANGE INSPECTIONS BY CITY PUBLIC WORKS INSPECTORS.
4. ALL EXCAVATIONS SHALL BE MADE, PROTECTED AND SUPPORTED AS REQUIRED FOR SAFETY AS PRESCRIBED BY CAL OSHA.
5. TEMPORARY PAVING SHALL BE 2 SACK SAND SLURRY OR 2 INCH THICKNESS TEMPORARY ASPHALT OVER COMPACTED SUBGRADE TO TOP OF PAVEMENT TO PROVIDE A SAFE AND SMOOTH TRAVELED SURFACE. PERMANENT PAVING SHALL BE PLACED WITHIN 7 DAYS OF EXCAVATION. SEAL COAT PAVEMENT 6 INCHES BEYOND PAVEMENT REPAIR AREA.
6. ANY STREET PAVED OR RESURFACED IN THE PREVIOUS 36 MONTHS THAT IS TRENCHED FOR 300 FEET OR MORE IN A TRAVELED LANE OR EXTENDS MORE THAN 7 FEET FROM THE CURB FACE / EDGE OF PAVEMENT OR HAS MORE THAN 3 CROSS TRENCHES IN 300 FEET SHALL BE OVERLAID AS DIRECTED BY THE ENGINEER WITH A SELF PROPELLED PAVING MACHINE PER CALTRANS SECTION 39.
7. POT HOLES AND/OR NARROW TRENCH CUTS SHALL NOT BE ALLOWED IN P.C.C. IMPROVEMENTS. P.C.C. SHALL BE SAWCUT, REMOVED AND RECONSTRUCTED IN PANELS AT THE SCORE LINES, OR WEAKENED PLANE JOINTS, OR AT LEAST 10 FEET WIDE AND AS DIRECTED BY THE ENGINEER IN THE FIELD.
8. IF THE EDGE OF THE TRENCH REPAIR (W+2 FEET) IS 2 FEET OR LESS FROM THE LIP OF THE GUTTER OR 3' OR LESS FROM THE EDGE OF PAVEMENT, THE EXISTING PAVEMENT SHALL BE REMOVED AND REPLACED PER THE TYPICAL SECTION.
9. FOR NOMINAL PIPE DIAMETERS OF 12" OR LESS, TYPICAL COVER IS 36" UNLESS CIRCUMSTANCES WARRANT DIFFERENTLY OR OTHERWISE APPROVED BY THE CITY ENGINEER.

SUPERSEDED

| CITY OF VICTORVILLE - ENGINEERING DEPARTMENT | | | | |
|---|---|---|---|---|
| REV. | DATE | BY | **TRENCH BACKFILL AND PAVEMENT REPAIRS** | **S-10** |
| | 9/11/89 | Dablo | | |
| 1 | 7/25/07 | STAFF | JOHN A. McGLADE, CITY ENGINEER | SHEET 2 OF 2 |

# BLANK INTENTIONALLY

| CITY OF VICTORVILLE - ENGINEERING DEPARTMENT | | | | |
|---|---|---|---|---|
| REV. | DATE | BY | RESIDENTIAL AND COMMERCIAL CURB RAMP | S-11 |
| | 4/22/92 | R.A. | | |
| 1 | 6/1/07 | STAFF | JOHN A. McGLADE, CITY ENGINEER | SHEET 1 OF 1 |

SUPERCEDED

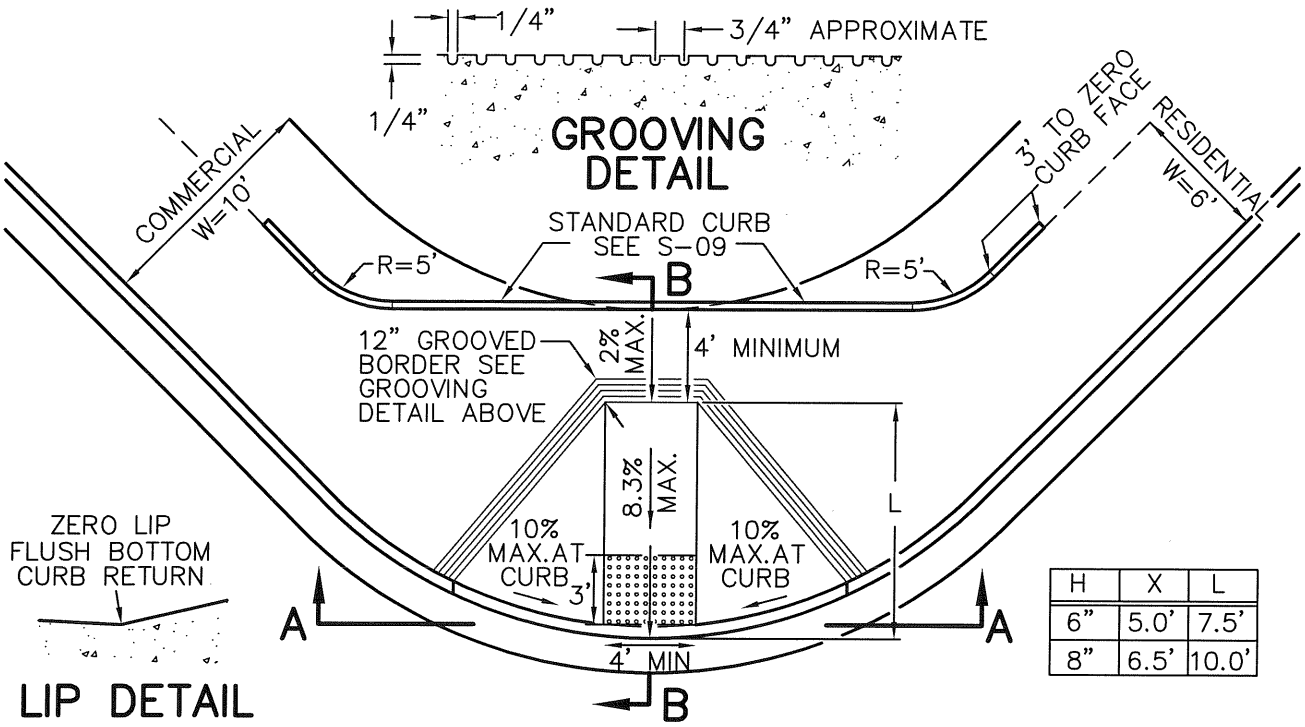


| H | X | L |
|---|---|---|
| 6" | 5.0' | 7.5' |
| 8" | 6.5' | 10.0' |




LIP DETAIL

CURB RAMP
NOT TO SCALE

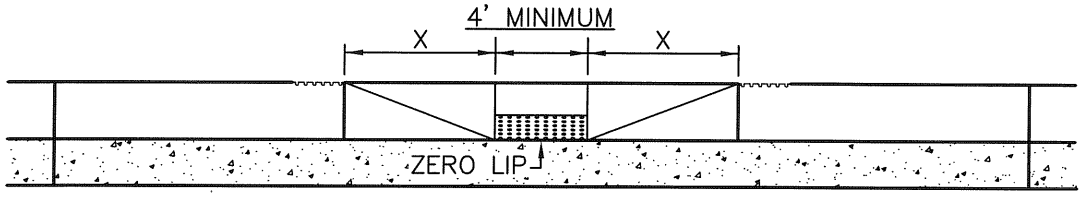


SECTION A–A
NOT TO SCALE

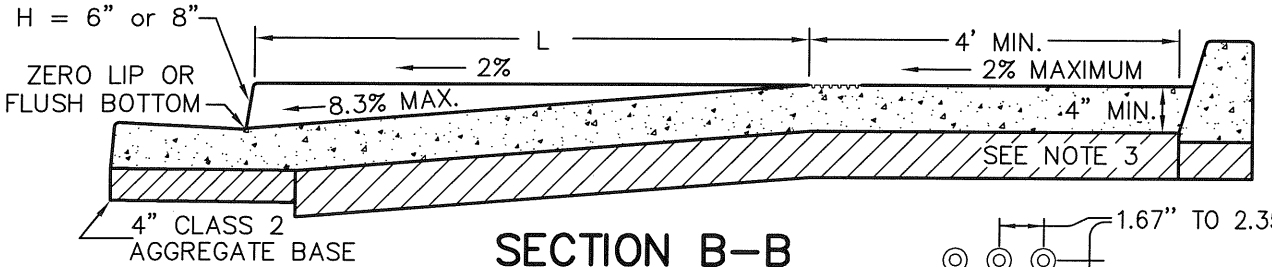


SECTION B–B
NOT TO SCALE

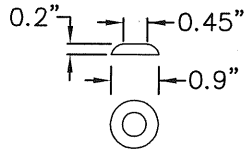


RAISED TRUNCATED DOME
(N.T.S.)

THE STANDARD COLOR FOR TRUNCATED DOMES IS BLUE

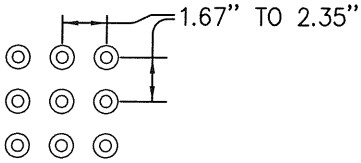


RAISED TRUNCATED DOME PATTERN (IN-LINE)

DETECTABLE WARNING SURFACE
(N.T.S.)

| APPROVED BY CITY ENGINEER | | CITY OF VICTORVILLE - ENGINEERING DEPARTMENT | |
|---|---|---|---|
| | | CURB RAMP | S-11A |
| DATE | INITIALS | | |
| 02/26/09 | J McG. | JOHN A. MCGLADE, CITY ENGINEER | SHEET 1 OF 2 |

## NOTES:

1. CURB RAMP SHALL BE CONSTRUCTED FROM PORTLAND CEMENT CONCRETE CONTAINING NOT LESS THAN 550 POUNDS OF TYPE II PORTLAND CEMENT PER CUBIC YARD WITH 4% AIR ENTRAINMENT AND 1" MAXIMUM AGGREGATE GRADING.
2. CONCRETE SHALL BE CURED WITH WHITE PIGMENTED CURING COMPOUND.
3. BASE SHALL CONSIST OF 6" NATIVE MATERIAL (MINIMUM "R" VALUE = 70) COMPACTED TO 90% RELATIVE COMPACTION. IF NATIVE MATERIAL IS CLAY OR CALICHE OR HAS AN "R" VALUE OF LESS THAN 70, CONSTRUCT 4" CLASS 2 AGGREGATE BASE COMPACTED TO 90% RELATIVE COMPACTION OR AS DIRECTED BY THE CITY ENGINEER.
4. BASE MATERIAL SHALL BE COMPACTED TO 90% RELATIVE COMPACTION FOR THE SIDEWALK AND 95% RELATIVE COMPACTION FOR THE CURB AND GUTTER.
5. IF A CURB RAMP IS TO BE INSTALLED IN AN EXISTING SIDEWALK, CURB AND GUTTER, THE EXISTING SIDEWALK, CURB AND GUTTER SHALL BE SAWCUT AND REMOVED TO THE NEAREST SCORELINE, WEAKENED PLANE JOINT OR EXPANSION JOINT. ALSO, ADJACENT PAVING SHALL BE SAWCUT 2' FROM THE EDGE OF THE GUTTER AND REPAVED ACCORDING TO STANDARD S-10.
6. CONSTRUCT RAMP IN THE MIDDLE OF THE CURB RETURN OR AT THE END OF THE CURB RETURN AWAY FROM THE CROSS GUTTER. RAMP MAY BE MOVED INTO THE TANGENT CURB SECTION AT INTERSECTIONS TO AVOID DISRUPTION OF HEAVY DRAINAGE FLOW.
7. IN LOCATING RAMPS IN CURB RETURN, CONSIDERATION SHOULD BE GIVEN TO THE LOCATION OF EXISTING PAINTED PEDESTRIAN CROSS WALKS AND TRAFFIC SIGNALS.
8. THE EDGE OF THE DETECTABLE WARNING SURFACE NEAREST THE STREET SHALL BE BETWEEN 6 INCHES AND 8 INCHES FROM THE GUTTER FLOWLINE.
9. IN CASES WHERE THIS STANDARD DOES NOT FIT THE SITE REQUIREMENT, THE DESIGNER MAY USE CALIFORNIA DEPARTMENT OF TRANSPORTATION STANDARD PLAN A88A (LATEST VERSION) AS APPROVED BY THE CITY ENGINEER.
10. IN CASES WHERE SURVEY MONUMENTATION MAY BE DISTURBED, SWING TIES AND NAIL AND TAG (R.P.'s) SHALL BE IDENTIFIED AND REPLACED.

| APPROVED BY CITY ENGINEER | | CITY OF VICTORVILLE - ENGINEERING DEPARTMENT | |
|---|---|---|---|
| DATE | INITIALS | CURB RAMP | S-11A |
| 02/26/09 | J. McG. | JOHN A. MCGLADE, CITY ENGINEER | SHEET 2 OF 2 |

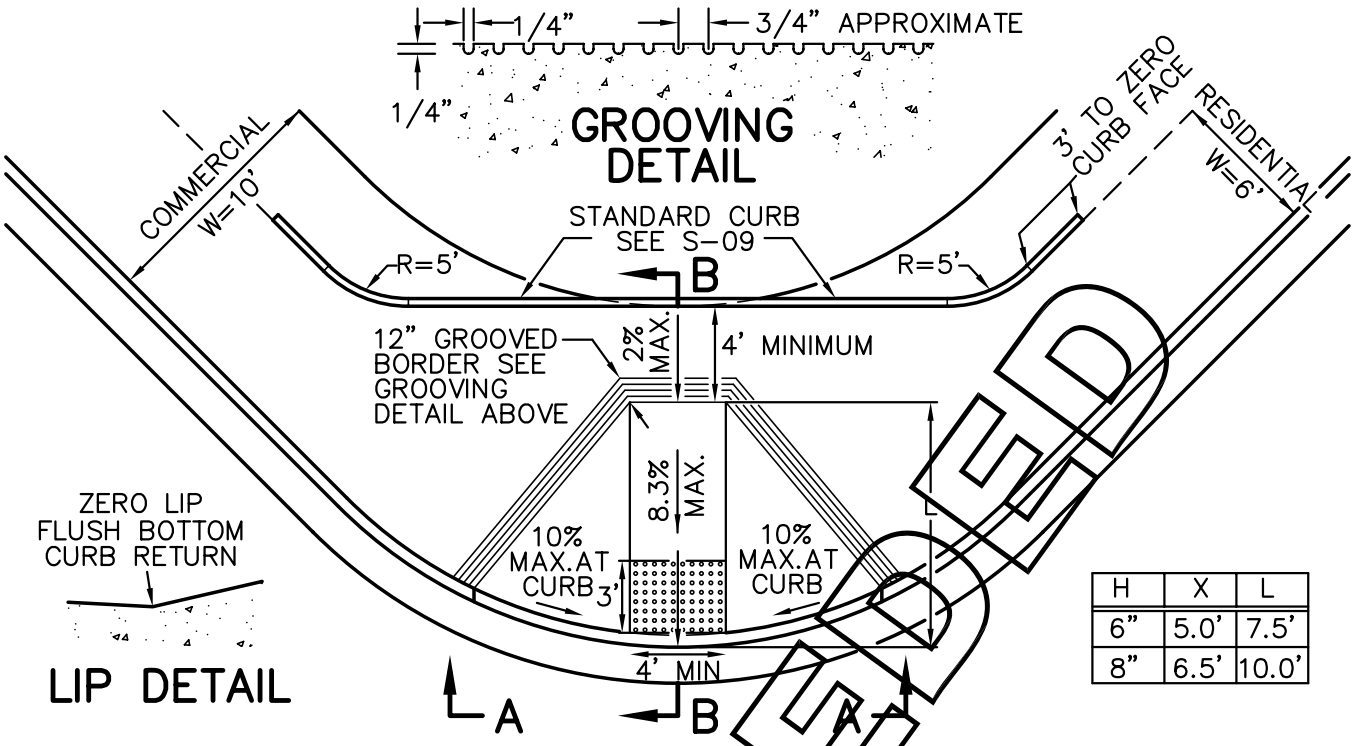


| H | X | L |
|---|---|---|
| 6" | 5.0' | 7.5' |
| 8" | 6.5' | 10.0' |

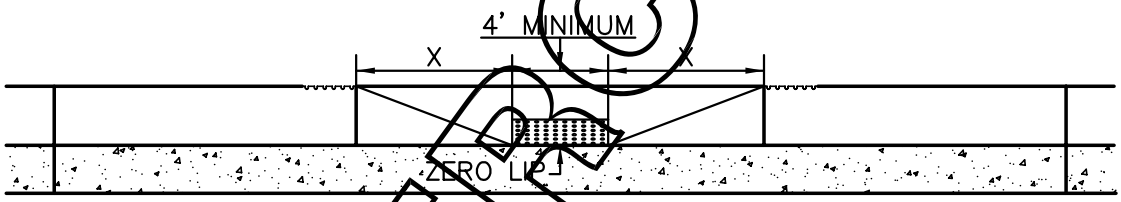


SECTION A–A
NOT TO SCALE

SECTION B–B
NOT TO SCALE

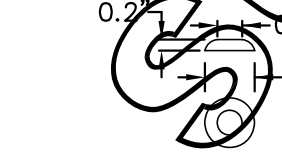


RAISED TRUNCATED DOME
(N.T.S.)

THE STANDARD COLOR FOR TRUNCATED DOMES IS BLUE

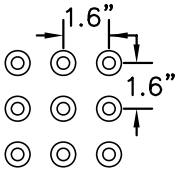


RAISED TRUNCATED DOME PATTERN (IN-LINE)

DETECTABLE WARNING SURFACE
(N.T.S.)

SUPERSEDED

| CITY OF VICTORVILLE - ENGINEERING DEPARTMENT | | | | |
|---|---|---|---|---|
| REV. | DATE | BY | CURB RAMP | S-11A |
| 1 | 7/20/05 | B.W.G. | | |
| 2 | 7/25/07 | J.A.M. | JOHN A. McGLADE, CITY ENGINEER | SHEET 1 OF 2 |

## NOTES:

1. CURB RAMP SHALL BE CONSTRUCTED FROM PORTLAND CEMENT CONCRETE CONTAINING NOT LESS THAN 550 POUNDS OF TYPE II PORTLAND CEMENT PER CUBIC YARD WITH 4% AIR ENTRAINMENT AND 1" MAXIMUM AGGREGATE GRADING.
2. CONCRETE SHALL BE CURED WITH WHITE PIGMENTED CURING COMPOUND.
3. BASE SHALL CONSIST OF 6" NATIVE MATERIAL (MINIMUM "R" VALUE = 70) COMPACTED TO 90% RELATIVE COMPACTION. IF NATIVE MATERIAL IS CLAY OR CALICHE OR HAS AN "R" VALUE OF LESS THAN 70, CONSTRUCT 4" CLASS 2 AGGREGATE BASE COMPACTED TO 90% RELATIVE COMPACTION OR AS DIRECTED BY THE CITY ENGINEER.
4. BASE MATERIAL SHALL BE COMPACTED TO 90% RELATIVE COMPACTION FOR THE SIDEWALK AND 95% RELATIVE COMPACTION FOR THE CURB AND GUTTER.
5. IF A CURB RAMP IS TO BE INSTALLED IN AN EXISTING SIDEWALK, CURB AND GUTTER, THE EXISTING SIDEWALK, CURB AND GUTTER SHALL BE SAWCUT AND REMOVED TO THE NEAREST SCORELINE, WEAKENED PLANE JOINT OR EXPANSION JOINT. ALSO, ADJACENT PAVING SHALL BE SAWCUT 2' FROM THE EDGE OF THE GUTTER AND REPAVED ACCORDING TO STANDARD S-10.
6. CONSTRUCT RAMP IN THE MIDDLE OF THE CURB RETURN OR AT THE END OF THE CURB RETURN AWAY FROM THE CROSS GUTTER. RAMP MAY BE MOVED INTO THE TANGENT CURB SECTION AT INTERSECTIONS TO AVOID DISRUPTION OF HEAVY DRAINAGE FLOW.
7. IN LOCATING RAMPS IN CURB RETURN, CONSIDERATION SHOULD BE GIVEN TO THE LOCATION OF EXISTING PAINTED PEDESTRIAN CROSS WALKS AND TRAFFIC SIGNALS.
8. THE EDGE OF THE DETECTABLE WARNING SURFACE NEAREST THE STREET SHALL BE BETWEEN 6 INCHES AND 8 INCHES FROM THE GUTTER FLOWLINE.
9. IN CASES WHERE THIS STANDARD DOES NOT FIT THE SITE REQUIREMENT, THE DESIGNER MAY USE CALIFORNIA DEPARTMENT OF TRANSPORTATION STANDARD PLAN A88A (LATEST VERSION) AS APPROVED BY THE CITY ENGINEER.
10. IN CASES WHERE SURVEY MONUMENTATION MAY BE DISTURBED, SWING TIES AND NAIL AND TAG (R.P.'s) SHALL BE IDENTIFIED AND REPLACED.

SUPERSEDED

| CITY OF VICTORVILLE - ENGINEERING DEPARTMENT | | | | |
|---|---|---|---|---|
| REV. | DATE | BY | CURB RAMP | S-11A |
| | 7/20/05 | B.W.G. | | |
| | 7/25/07 | J.A.M. | JOHN A. McGLADE, CITY ENGINEER | SHEET 2 OF 2 |

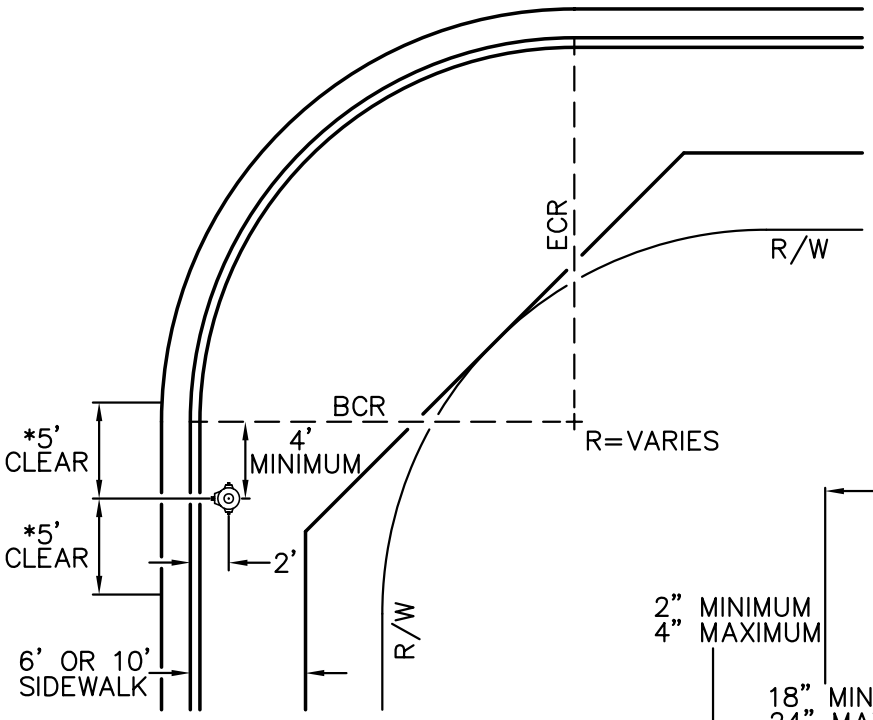


## LOCATION

STREET INTERSECTION OR
COMMERCIAL DRIVE APPROACH
TYPE 3

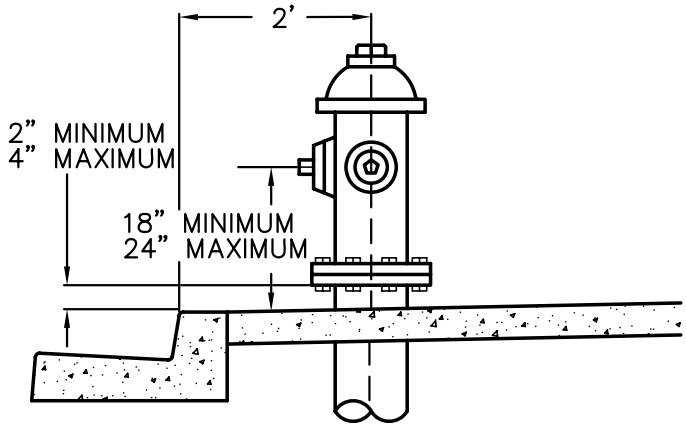


## ELEVATION

NOT TO SCALE

## NOTES:

1. FIRE HYDRANTS ARE TO HAVE 6 INCH BARRELS WITH 2 EACH 2 1/2 INCH AND 1 EACH 4 INCH OUTLETS WITH NATIONAL STANDARD THREADS. HYDRANTS SHALL BE OF THE DRY BARREL, SELF DRAINING TYPE AND PAINTED SAFETY YELLOW AND BE APPROVED BY THE FIRE CHIEF.
2. FIRE HYDRANTS SHALL BE LOCATED AT STREET INTERSECTIONS AS SHOWN AT EITHER THE ECR OR BCR AND ELSEWHERE AS REQUIRED AT PROPERTY LINES. HYDRANTS SHALL BE PLACED 300 FEET ON CENTER.
3. * A CLEAR WORKING AREA OF 5 FEET EITHER SIDE OF THE HYDRANT SHALL BE MAINTAINED. NO STRUCTURE; INCLUDING STREET LIGHTS, POWER POLES, UTILITY CABINETS OR MAILBOXES, SHALL BE ERECTED IN THIS AREA THAT PROJECT ABOVE THE TOP OF SIDEWALK.
4. PAINT TOP AND FACE OF CURB 15 FEET EITHER SIDE OF A FIRE HYDRANT RED (IE. NO PARKING). THE CURB IN A CURB RETURN OR DRIVEWAY APPROACH NEED NOT BE PAINTED.
5. RETROFITTED FIRE HYDRANTS SHALL HAVE THE SIDEWALK AND CURB & GUTTER SAWCUT, REMOVED AND REPLACED AT THE NEAREST SCORE LINE PER CITY STANDARDS AND AS DIRECTED BY THE ENGINEER IN THE FIELD.
6. FIRE HYDRANTS SHALL NOT BE LOCATED WITHIN 2 FEET OF A WING OF A DRIVEWAY.

| CITY OF VICTORVILLE - ENGINEERING DEPARTMENT | | | | |
|---|---|---|---|---|
| REV. | DATE | BY | FIRE HYDRANT LOCATION | S-12 |
| | 6/20/92 | Dablo | | |
| 1 | 6/1/07 | STAFF | JOHN A. McGLADE, CITY ENGINEER | SHEET 1 OF 1 |

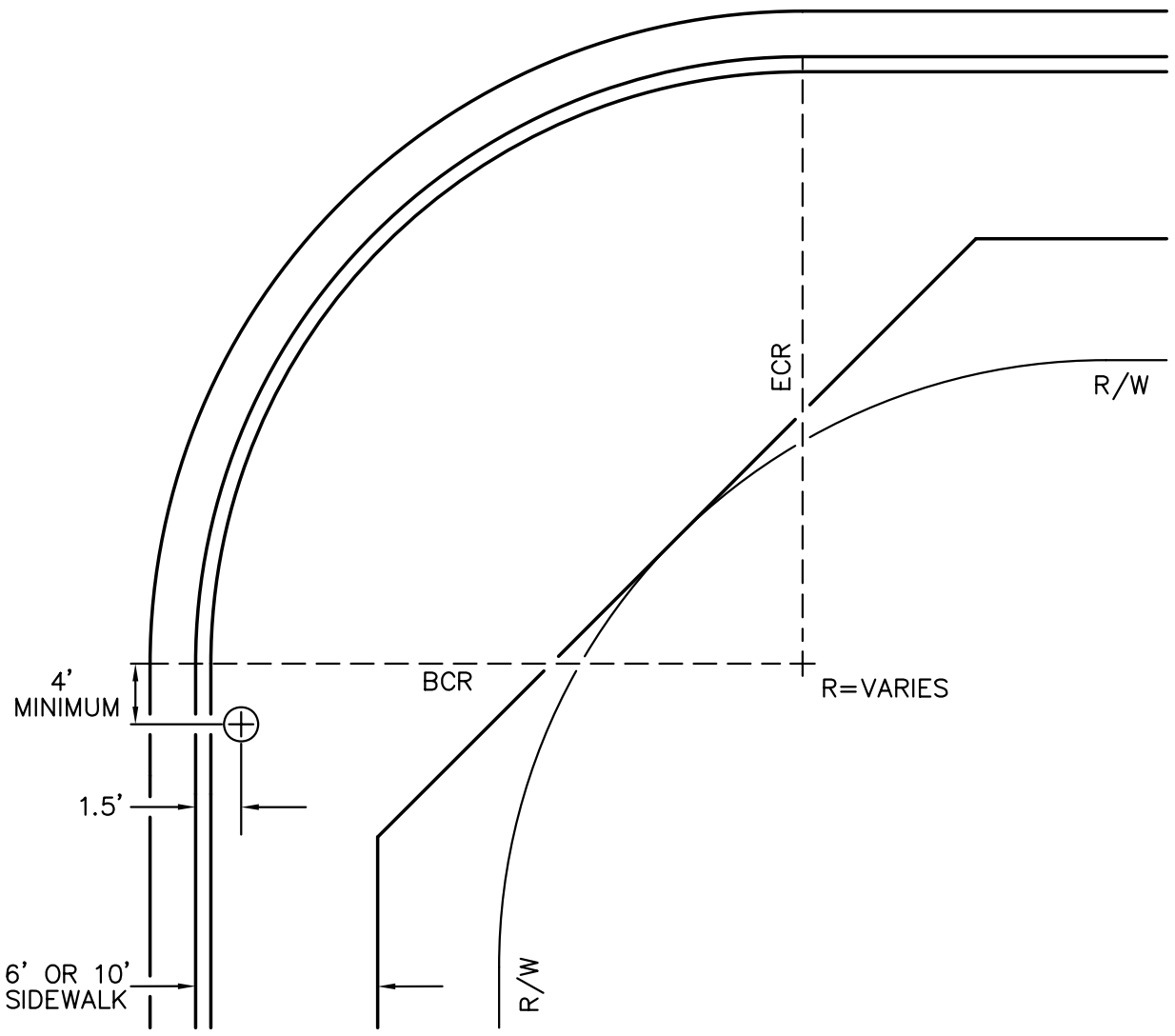


## LOCATION

NOT TO SCALE

## NOTES:

1. CORNER UTILITY LOCATION MAY BE BY EITHER THE BCR OR ECR AS SHOWN FOR POWER POLES AND STREET LIGHTS. NO UTILITY, EXCEPT SIGNALS SHALL BE LOCATED ON THE SIDEWALK IN THE CURB RETURN.
2. UTILITIES SHALL MAINTAIN 5 FEET CLEAR OF EXISTING AND PROPOSED FIRE HYDRANTS PER CITY STANDARD S–12.
3. RETROFITTED UTILITY SHALL HAVE THE SIDEWALK AND CURB & GUTTER SAWCUT, REMOVED AND REPLACED TO THE NEAREST SCORE LINE.

| CITY OF VICTORVILLE - ENGINEERING DEPARTMENT | | | | |
|---|---|---|---|---|
| REV. | DATE | BY | **CORNER UTILITY LOCATION** | **S-13** |
| | 7/16/92 | Dablo | | |
| 1 | 6/1/07 | STAFF | JOHN A. McGLADE, CITY ENGINEER | SHEET 1 OF 1 |

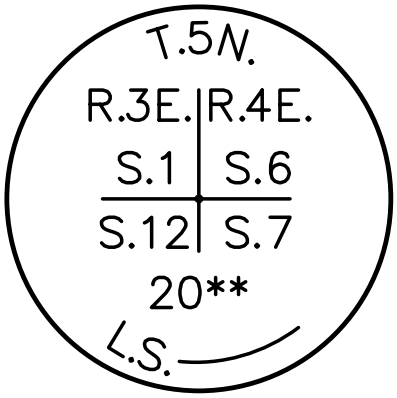


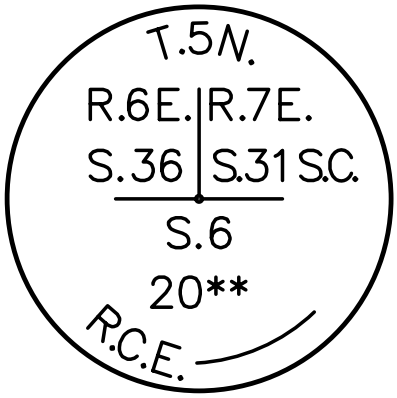


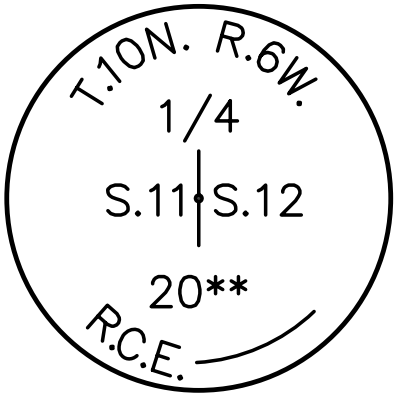


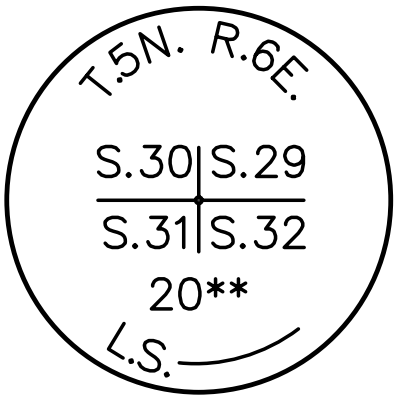


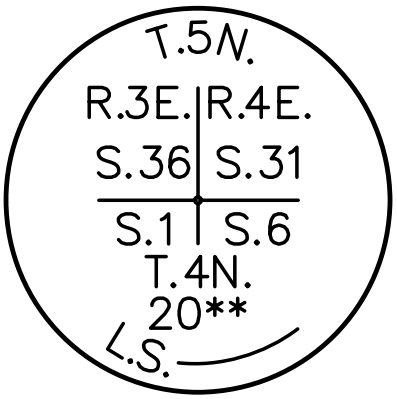


# EXAMPLES OF BRASS CAP MONUMENTATION AT SECTIONAL CORNERS

## NOTES:

1. FOR REPLACEMENT OF P.L.S.S. CORNERS SUCH AS SECTION CORNERS OR QUARTER CORNERS, USE A 2" IRON PIPE WITH A BRASS CAP STAMPED AS SHOWN ABOVE. ALL OTHER SURVEY MONUMENTS TO BE PER VICTORVILLE MUNICIPLE CODE TITLE 17.

2. ** – DENOTES YEAR NUMBER OF MONUMENTATION.

| CITY OF VICTORVILLE - ENGINEERING DEPARTMENT | | | | |
|---|---|---|---|---|
| REV. | DATE | BY | **P.L.S.S. SURVEY MONUMENTATION REPLACEMENT** | **S-14** |
| | 1/5/76 | SFH | | |
| 1 | 6/1/07 | STAFF | JOHN A. McGLADE, CITY ENGINEER | SHEET 1 OF 1 |

# BLANK INTENTIONALLY

| CITY OF VICTORVILLE - ENGINEERING DEPARTMENT | | | | |
|---|---|---|---|---|
| REV. | DATE | BY | ACCESS RIGHTS | S-15 |
| | 1/5/76 | S.F.H. | | |
| 1 | 6/1/07 | STAFF | JOHN A. McGLADE, CITY ENGINEER | SHEET 1 OF 1 |

OBSOLETE

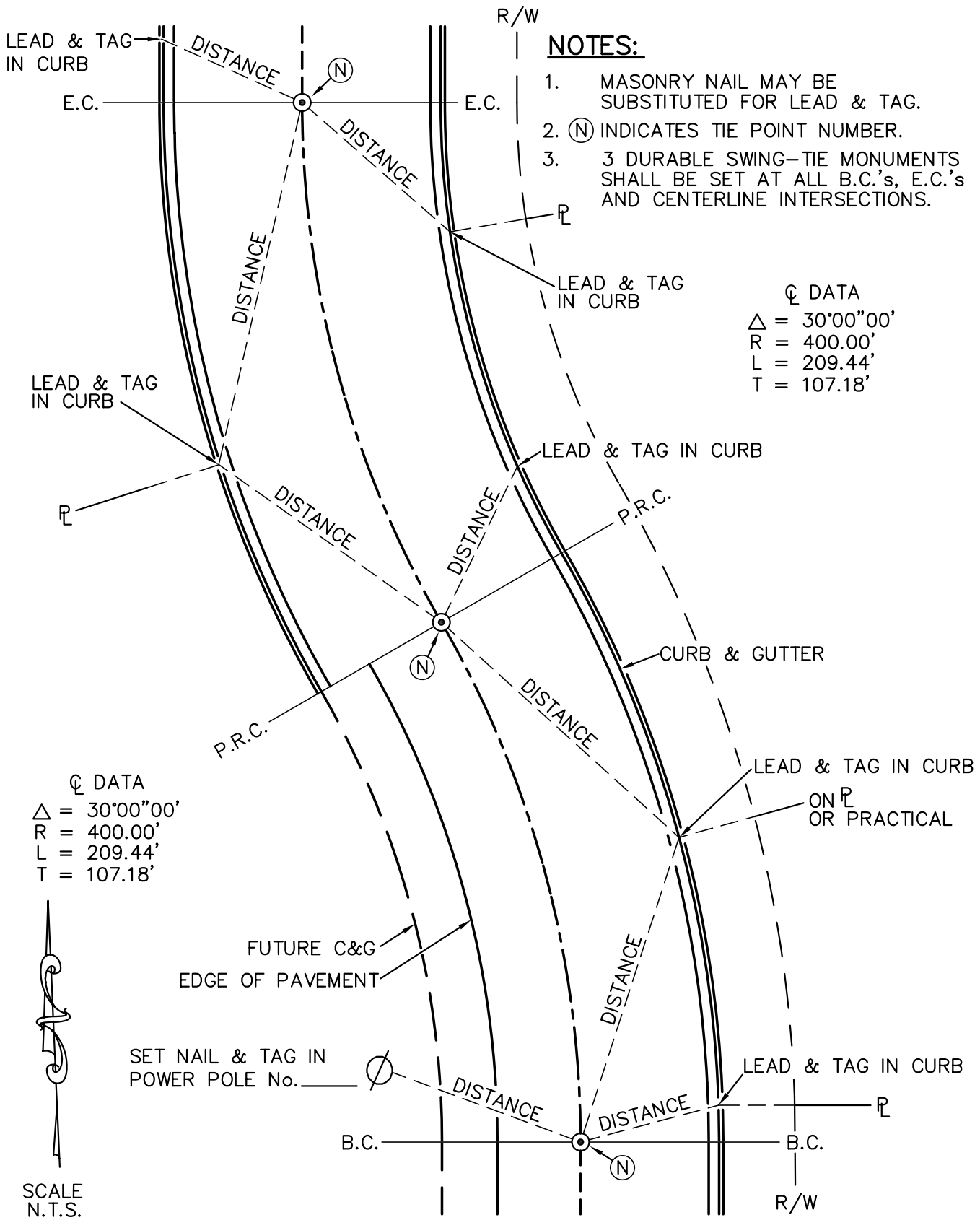


| CITY OF VICTORVILLE - ENGINEERING DEPARTMENT | | | | |
|---|---|---|---|---|
| REV. | DATE | BY | **CENTERLINE SURVEY TIES STANDARD 1** | **S-16** |
| | 1/5/76 | S.F.H. | | |
| 1 | 6/1/07 | STAFF | JOHN A. McGLADE, CITY ENGINEER | SHEET 1 OF 1 |

## NOTES:

1. MASONRY NAIL MAY BE SUBSTITUTED FOR LEAD & TAG.
2. (N) INDICATES TIE POINT NUMBER.
3. 3 DURABLE SWING–TIE MONUMENTS SHALL BE SET AT ALL B.C.'s, E.C.'s AND CENTERLINE INTERSECTIONS.
4. ○ INDICATES 1" I.P. SET AT LOT CORNER AND USED AS A TIE POINT FOR STREET ℄.

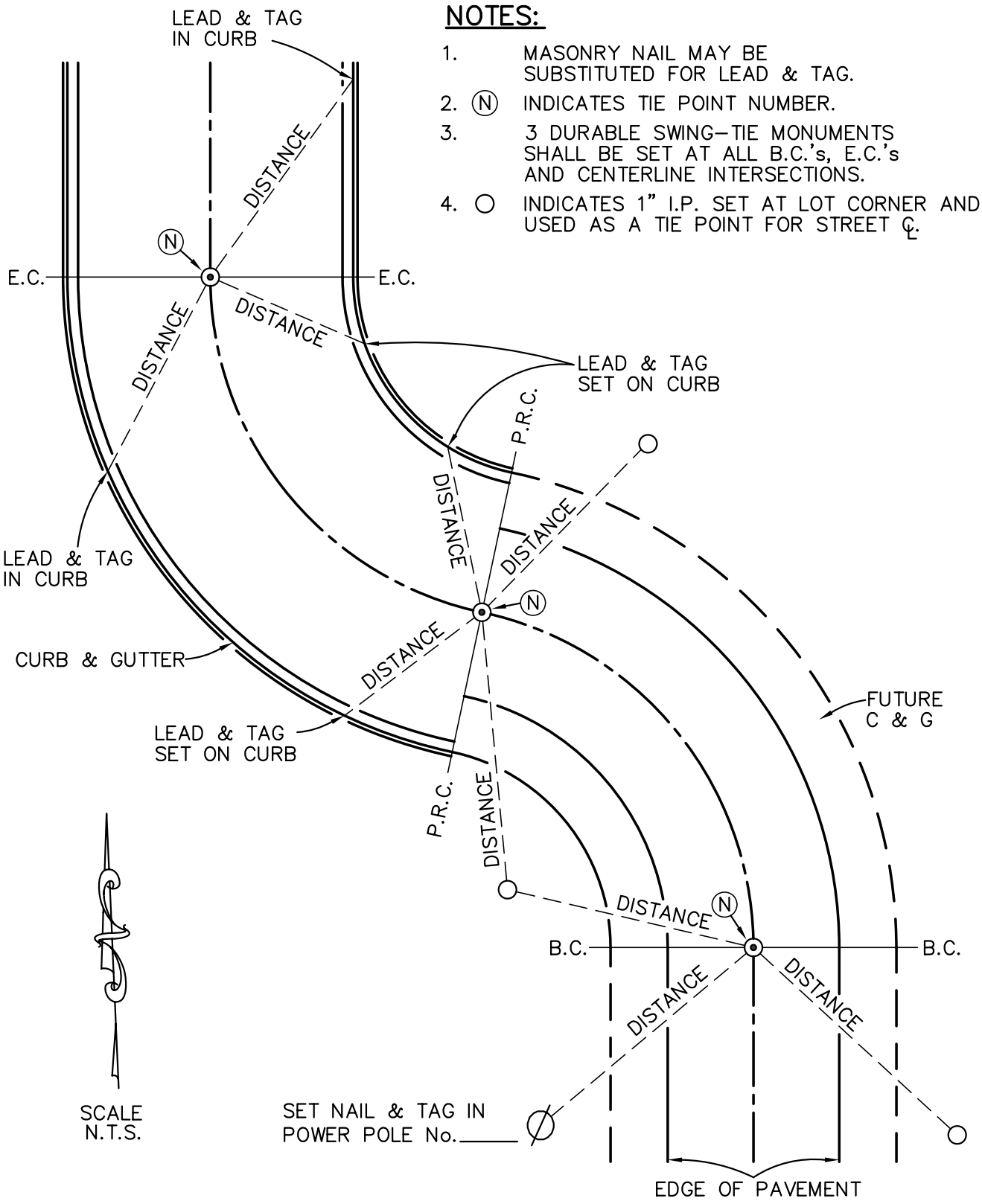


| CITY OF VICTORVILLE - ENGINEERING DEPARTMENT | | | | |
|---|---|---|---|---|
| REV. | DATE | BY | **CENTERLINE SURVEY TIES STANDARD 2** | **S-17** |
| | 1/5/76 | S.F.H. | | |
| 1 | 6/1/07 | STAFF | JOHN A. McGLADE, CITY ENGINEER | SHEET 1 OF 1 |

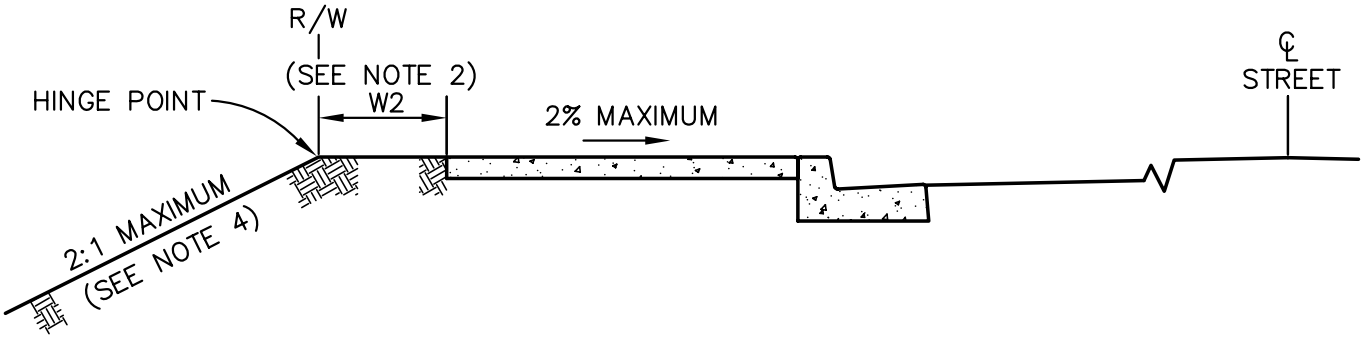


## EXISTING OR FUTURE SIDEWALK

NOT TO SCALE

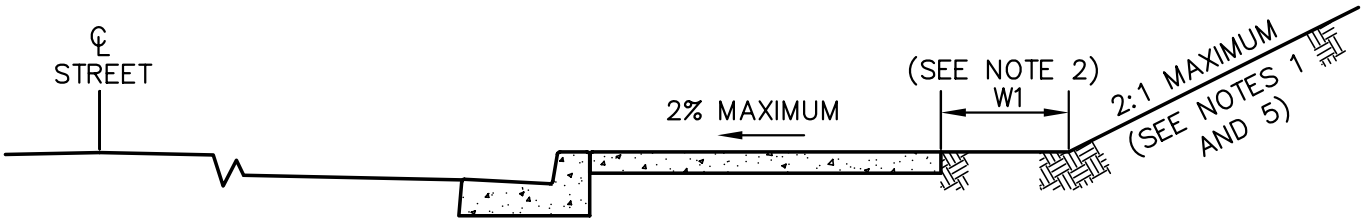


## EXISTING OR FUTURE SIDEWALK

NOT TO SCALE

## NOTES:

1. STEEPER SLOPES IN CUT SECTIONS MAY BE PERMITTED UP TO AN ABSOLUTE MAXIMUM OF $1\frac{1}{2}$:1 PROVIDED REMEDIAL MEASURES AND/OR SOIL TESTS TOGETHER WITH THE RECOMMENDATIONS OF A QUALIFIED SOILS ENGINEER ARE PROVIDED SUBSTANTIATING THE PROPOSED SLOPE DESIGN.
2. W1 = 4 FEET MINIMUM FOR RESIDENTIAL ZONES.
   W1 = 0 (ZERO) FEET FOR COMMERCIAL ZONES. REQUIRES PLACEMENT OF STANDARD CURB S–09.
   W2 = DEPENDENT ON RIGHT OF WAY WIDTH IN RESIDENTIAL ZONES, 4 FEET MINIMUM (HINGE POINT SHALL BE AT RIGHT OF WAY LINE.)
   W2 = 0 (ZERO) FEET FOR COMMERCIAL ZONES.
3. DEVIATION FROM THIS STANDARD MAY BE PERMITTED BASED ON ENGINEERED DESIGN TO ADEQUATELY PROVIDE FOR SUPPORT OF THE SIDEWALK AREA.
4. FOR COMMERCIAL ZONES, SLOPE EASEMENTS MAY BE REQUIRED AS DIRECTED BY THE CITY ENGINEER.
5. MAXIMUM OF 3:1 SLOPE IF INSIDE LANDSCAPE MAINTENANCE ASSESSMENT DISTRICT.

| CITY OF VICTORVILLE - ENGINEERING DEPARTMENT | | | | |
|---|---|---|---|---|
| REV. | DATE | BY | **SLOPE AND PARKWAY GRADING REQUIREMENTS** | **S-18** |
| | 1/6/76 | S.F.H. | | |
| 1 | 6/1/07 | STAFF | JOHN A. McGLADE, CITY ENGINEER | SHEET 1 OF 1 |

# BLANK INTENTIONALLY

| CITY OF VICTORVILLE - ENGINEERING DEPARTMENT | | | | |
|---|---|---|---|---|
| REV. | DATE | BY | TYPICAL SECTION ASPHALTIC CONCRETE PAVEMENTS | S-19 |
| | 2/5/76 | X.S.S. | | |
| 1 | 6/1/07 | STAFF | JOHN A. McGLADE, CITY ENGINEER | SHEET 1 OF 1 |

OBSOLETE

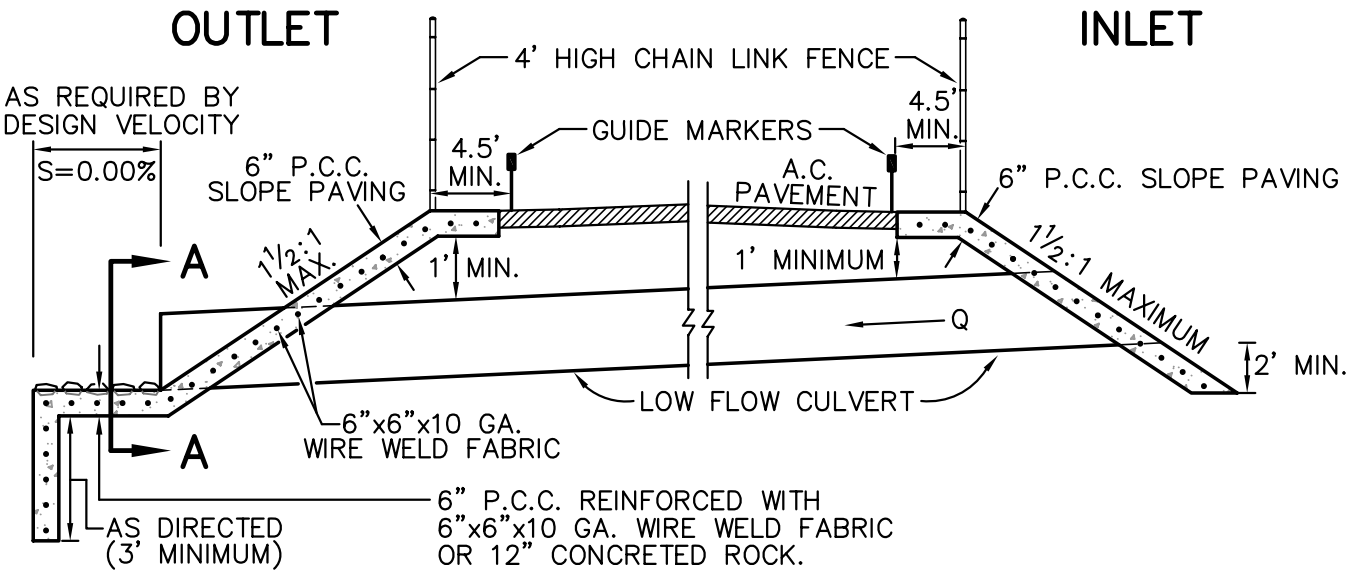


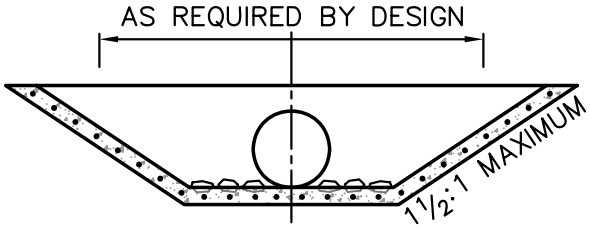


## SECTION A–A

## NOTES:

1. ALL CONCRETE SHALL CONTAIN NOT LESS THAN 550 POUNDS OF CEMENTITIOUS MATERIAL PER CUBIC YARD WITH 4% AIR ENTRAINMENT.
2. DOWNSTREAM CUTOFF WALL SHALL EXTEND DOWN 3' MINIMUM BELOW WASH BOTTOM OR AS REQUIRED BY DESIGN. UPSTREAM WALL SHALL EXTEND DOWN 2' MINIMUM BELOW WASH BOTTOM OR AS REQUIRED BY DESIGN.
3. THIS STANDARD IS TO APPLY TO THE INITIAL STAGE OF STAGED CONSTRUCTION OF AN ARTERIAL STREET TO BE DEVELOPED WITH TWO LANES AND PAVED SHOULDERS ACROSS THE WASH AREA SUBJECT TO FLOW. UPSTREAM AND DOWNSTREAM CHANNEL BOTTOM AND BANK PROTECTION TREATMENT TYPICAL FOR THIS APPLICATION AND THE APPLICATION DEPICTED ON STANDARD DRAWING NUMBER D–01. ALTERNATE METHODS OF CHANNEL BOTTOM AND BANK PROTECTION MAY BE APPROVED BASED ON DESIGN CONDITIONS, OTHERWISE THIS STANDARD AND STANDARD D–01 SHALL APPLY.

| CITY OF VICTORVILLE - ENGINEERING DEPARTMENT | | | | |
|---|---|---|---|---|
| REV. | DATE | BY | **STANDARD CUTOFF WALL FOR DRAINAGE CHANNEL** | **S-20** |
| | 2/5/76 | X.S.S. | | |
| 1 | 6/1/07 | STAFF | JOHN A. McGLADE, CITY ENGINEER | SHEET 1 OF 1 |

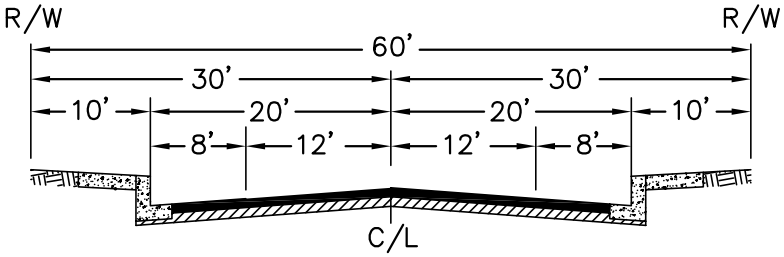


LOCAL

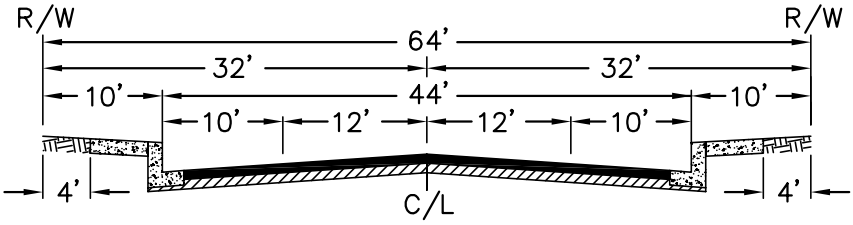


COLLECTOR

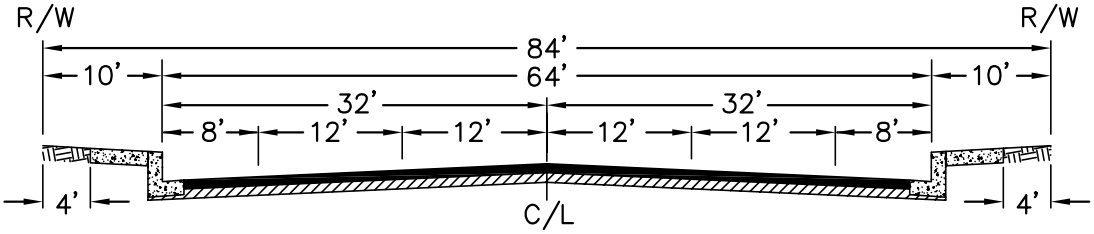


ARTERIAL

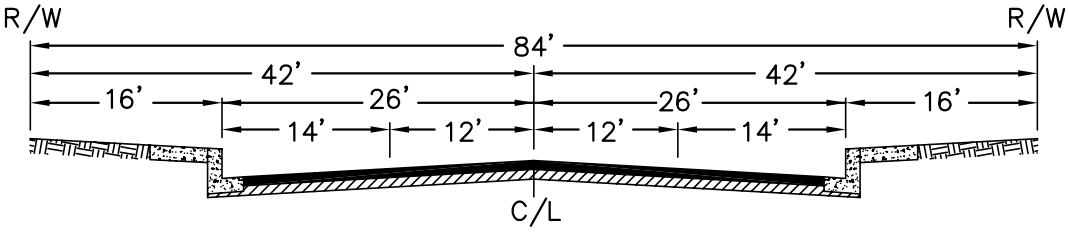


SECONDARY ARTERIAL

OLD TOWN SPECIFIC PLAN

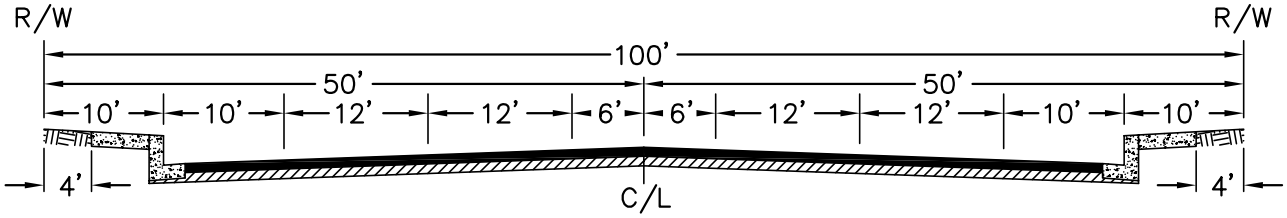


MAJOR ARTERIAL

| CITY OF VICTORVILLE - ENGINEERING DEPARTMENT | | | | |
|---|---|---|---|---|
| REV. | DATE | BY | **STANDARD STREET GEOMETRIC CROSS-SECTIONS** | **S-21** |
| | 9/30/76 | X.S.S. | | |
| 1 | 6/1/07 | STAFF | JOHN A. McGLADE, CITY ENGINEER | SHEET 1 OF 2 |

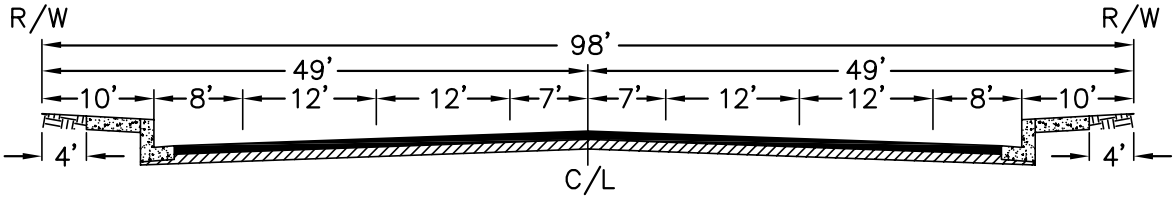


## MAJOR ARTERIAL

S.C.L.A. SPECIFIC PLAN

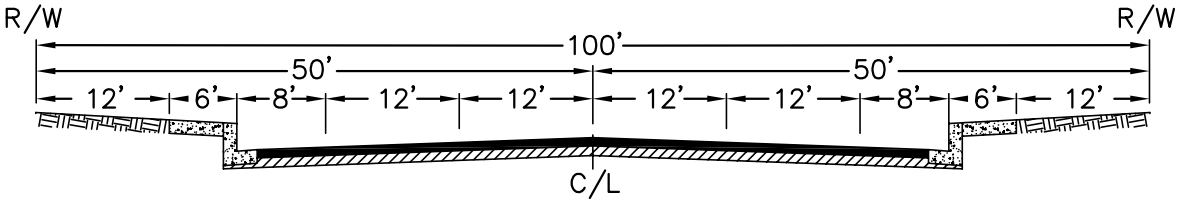


## RESIDENTIAL ARTERIAL

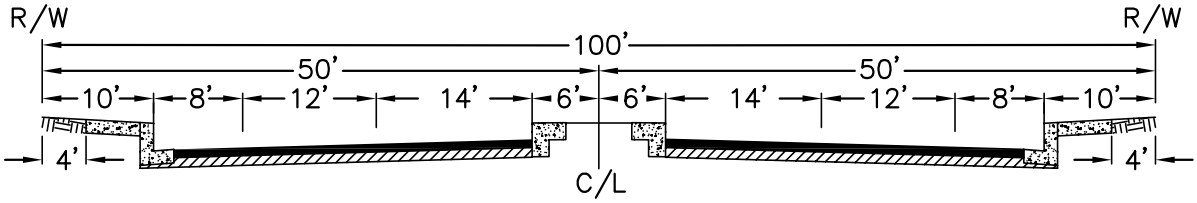


## PARKWAY

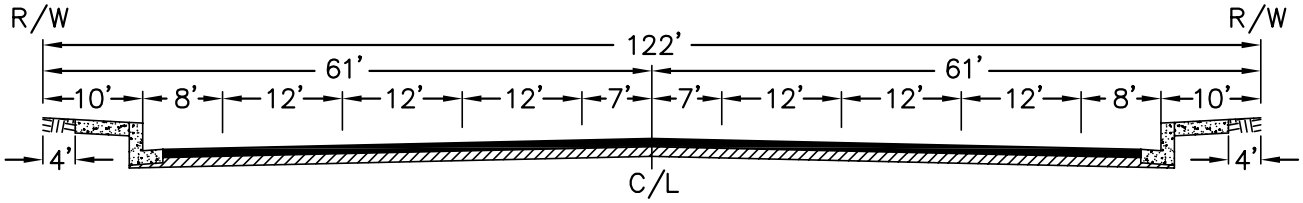


## SUPER ARTERIAL

S.C.L.A. SPECIFIC PLAN

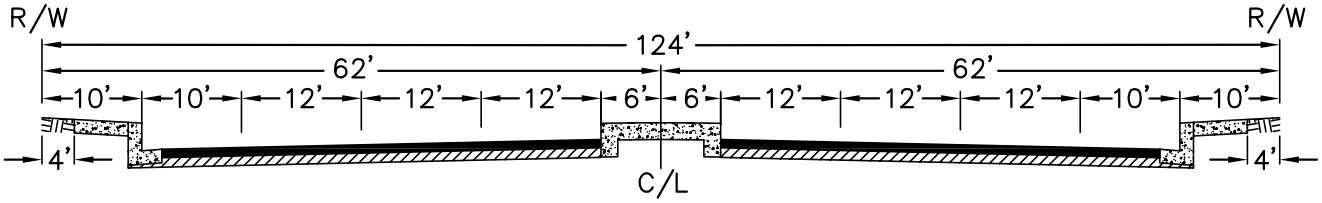


## SUPER ARTERIAL

| CITY OF VICTORVILLE - ENGINEERING DEPARTMENT | | | | |
|---|---|---|---|---|
| REV. | DATE | BY | **STANDARD STREET GEOMETRIC CROSS-SECTIONS** | **S-21** |
| | 9/30/76 | X.S.S. | | |
| 1 | 6/1/07 | STAFF | JOHN A. McGLADE, CITY ENGINEER | SHEET 2 OF 2 |

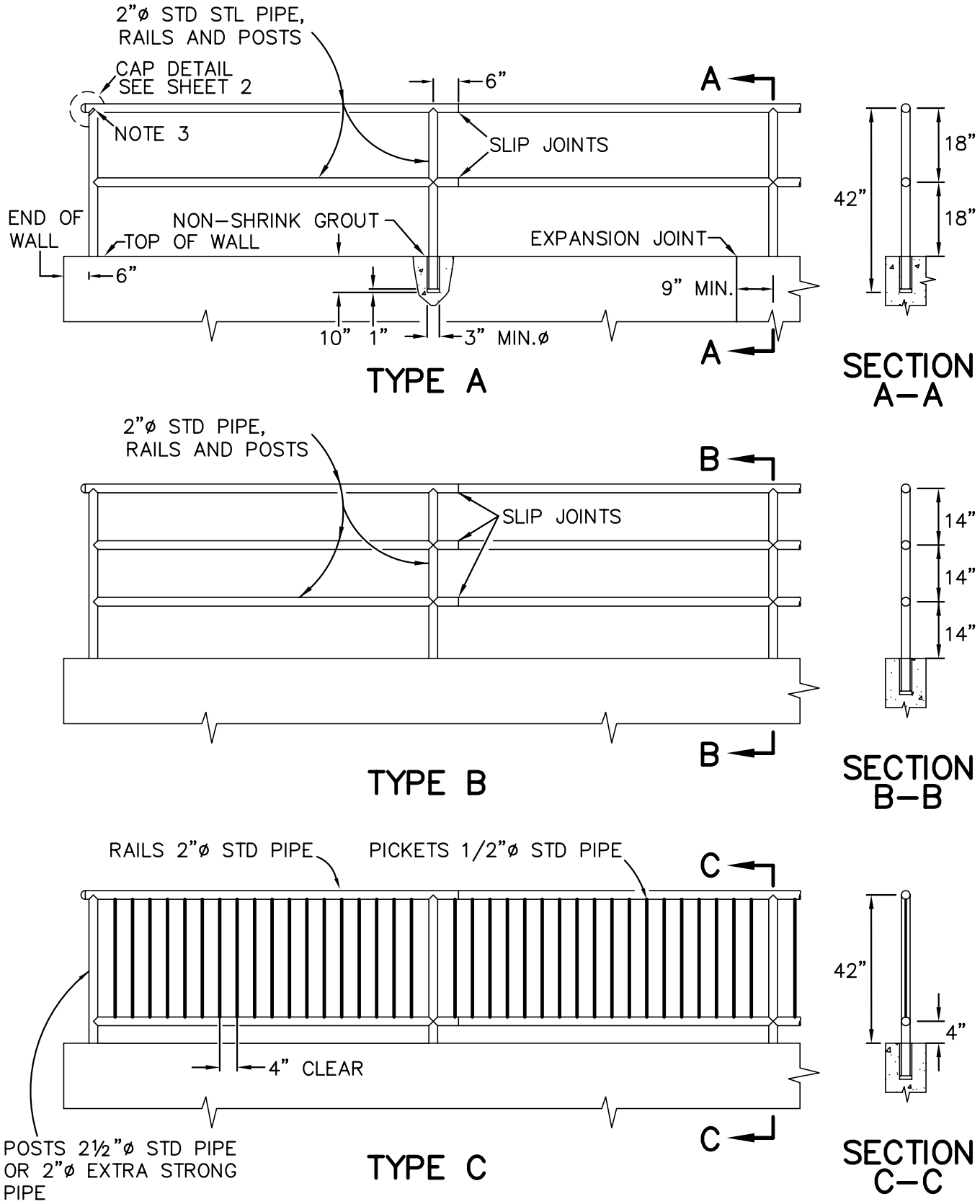


| CITY OF VICTORVILLE - ENGINEERING DEPARTMENT | | | | |
|---|---|---|---|---|
| REV. | DATE | BY | **METAL HAND RAILINGS** | **S-22** |
| | 9/1/75 | STAFF | | |
| 1 | 6/1/07 | STAFF | JOHN A. MCGLADE, CITY ENGINEER | SHEET 1 OF 2 |

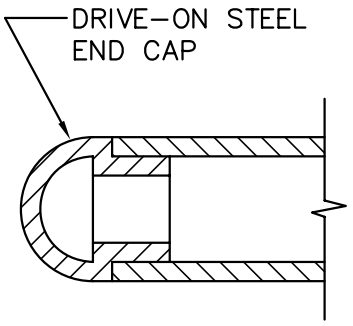


## CAP DETAIL FOR RAIL END

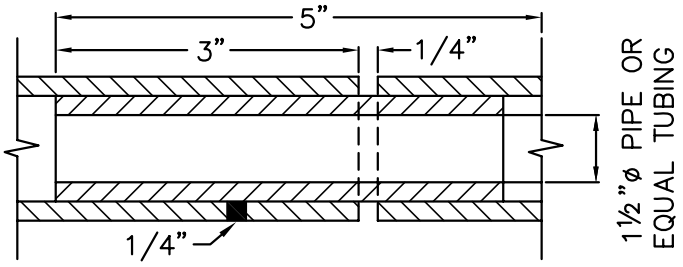


## SLIP JOINT DETAIL

NOTES:

1. RAILS, POSTS AND PICKETS SHALL BE GALVANIZED STEEL PIPE.
2. MAXIMUM SPACING OF POSTS SHALL BE 8' ON STRAIGHT ALIGNMENTS AND 6' ON CURVED ALIGNMENTS WITH LESS THAN 30' RADIUS. MAKE SPACING UNIFORM BETWEEN CHANGES IN ALIGNMENT.
3. WELDS SHALL BE SLOT OR FILLET WELDS EQUAL TO THICKNESS OF PIPE. WELD ALL JOINTS ALL AROUND.

| CITY OF VICTORVILLE - ENGINEERING DEPARTMENT | | | | |
|---|---|---|---|---|
| REV. | DATE | BY | METAL HAND RAILINGS | S-22 |
| | 9/1/75 | STAFF | | |
| 1 | 6/1/07 | STAFF | JOHN A. MCGLADE, CITY ENGINEER | SHEET 2 OF 2 |

# BLANK INTENTIONALLY

| CITY OF VICTORVILLE - ENGINEERING DEPARTMENT | | | | |
|---|---|---|---|---|
| REV. | DATE | BY | 8' STEEL PIN CROSSARM MOUNTING FOR BALL FIELD LIGHTS | S-23 |
| | 4/25/77 | X.S.S. | | |
| 1 | 6/1/07 | STAFF | JOHN A. McGLADE, CITY ENGINEER | SHEET 1 OF 1 |

OBSOLETE

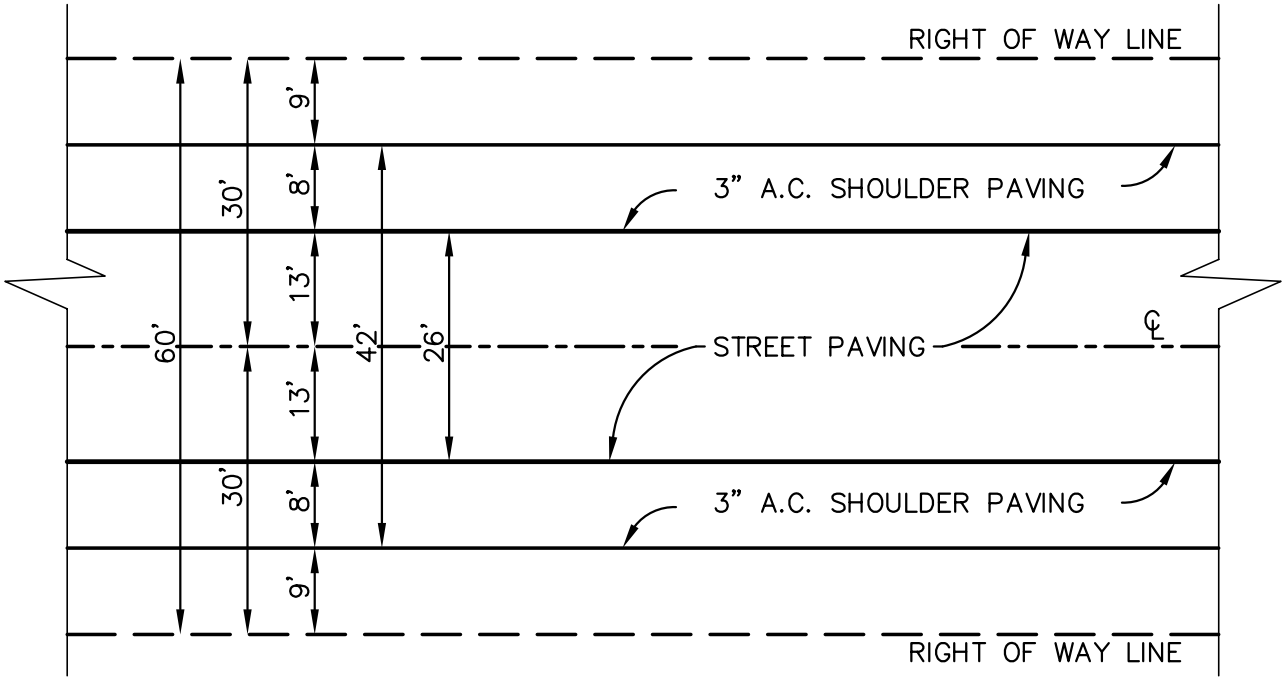


## PLAN

NOT TO SCALE

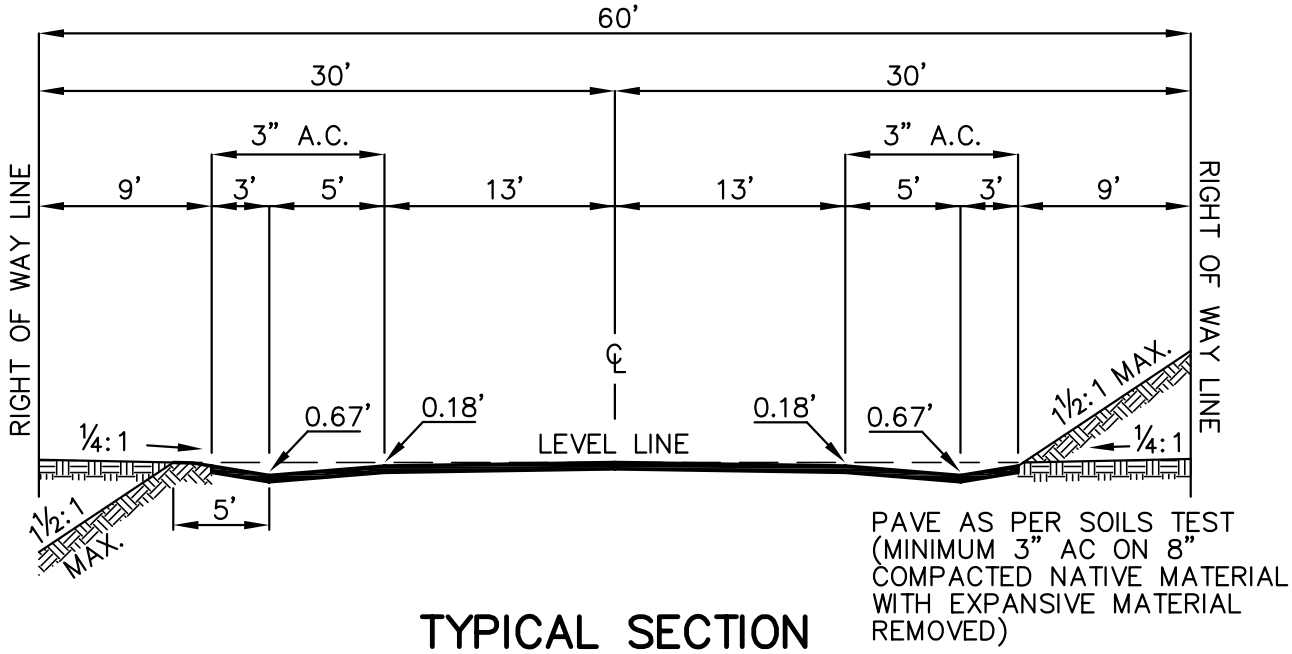


## TYPICAL SECTION

NOT TO SCALE

## NOTES:

1. ADDITIONAL DRAINAGE IMPROVEMENTS TO BE INSTALLED AS REQUIRED.

| CITY OF VICTORVILLE - ENGINEERING DEPARTMENT | | | | |
|---|---|---|---|---|
| REV. | DATE | BY | **RURAL STREET SECTION** | **S-24** |
| | 3/14/80 | M.A.T. | **FOR RESIDENTIAL AREAS WITH LOTS OF 1 ACRE OR MORE** | |
| 1 | 6/1/07 | STAFF | JOHN A. McGLADE, CITY ENGINEER | SHEET 1 OF 1 |

| STREET CLASSIFICATION | RIGHT OF WAY WIDTH (FEET) | DESIGN SPEED (MPH) | CENTERLINE RADIUS (FT. MINIMUM) | GRADE (% MAXIMUM) | TRAFFIC INDEX (MINIMUM) | PAVEMENT SECTION EQUIVALENT (AC/BASE, INCHES MINIMUM) |
|---|---|---|---|---|---|---|
| LOCAL | 60 | 30 | 300 | 10% | 6 | 3"/8" |
| COLLECTOR | 64 | 40 | 600 | 7% | 8 | 3.5"/8" |
| ARTERIAL | 84 | 50 | | 7% | 10 | 5.5"/8" |
| MAJOR ARTERIAL | 100 | 55 | | | 11 | 6"/10" |
| SUPER ARTERIAL | 124 | 65 | | | 12* | 7"/10" |

## NOTES:

1. REQUIRED RIGHT OF WAY WIDTH MAY BE INCREASED FOR SPECIAL REQUIREMENTS AS DETERMINED BY THE CITY ENGINEER.
2. MINIMUM CENTERLINE RADIUS FOR ALL STREETS SHALL COMPLY WITH THE HIGHWAY DESIGN MANUAL. (MINIMUM 300' RESIDENTIAL STREETS AND MINIMUM 600' COLLECTOR STREETS).
3. CENTERLINE RADIUS MAY HAVE TO BE INCREASED TO MEET MINIMUM SIGHT DISTANCE STANDARDS.
4. * TRAFFIC INDEX FOR BEAR VALLEY ROAD AND AIR EXPRESSWAY IS 13.
5. PAVEMENT SECTION IS BASED ON AN ASSUMED R-VALUE OF 50. PAVEMENT SECTION DESIGN IS DETERMINED BY TI AND R-VALUE PER THE HIGHWAY DESIGN MANUAL.

| CURB RETURN RADIUS (FEET) | | | | | |
|---|---|---|---|---|---|
| STREET CLASSIFICATION | LOCAL | COLLECTOR | ARTERIAL | MAJOR ARTERIAL | SUPER ARTERIAL |
| LOCAL | 20 | | | | |
| COLLECTOR | 25 | 25 | | | |
| ARTERIAL | 30 | 30 | 35 | | |
| MAJOR ARTERIAL | 30 | 30 | 35 | 40 | |
| SUPER ARTERIAL | 35 | 40 | 50 | 50 | 50 |

## NOTES:

1. CALTRANS REQUIRES A 50 FOOT RADIUS FOR STREET CONNECTIONS TO STATE ROUTES.

| MINIMUM TANGENT LENGTH AT INTERSECTIONS (FEET)* | | | | | |
|---|---|---|---|---|---|
| **STREET CLASSIFICATION** | ON A **LOCAL** CONNECTING TO A | ON A **COLLECTOR** CONNECTING TO A | ON AN **ARTERIAL** CONNECTING TO A | ON A **MAJOR ARTERIAL** CONNECTING TO A | ON A **SUPER ARTERIAL** CONNECTING TO A |
| **LOCAL** | 60 | | | | |
| **COLLECTOR** | 65 | 100 | | | |
| **ARTERIAL** | 75 | 120 | 160 | | |
| **MAJOR ARTERIAL** | 85 | 140 | 200 | 260 | |
| **SUPER ARTERIAL** | 100 | 160 | 240 | 320 | 400 |

*LENGTH IS FROM CENTERLINE OF INTERSECTION

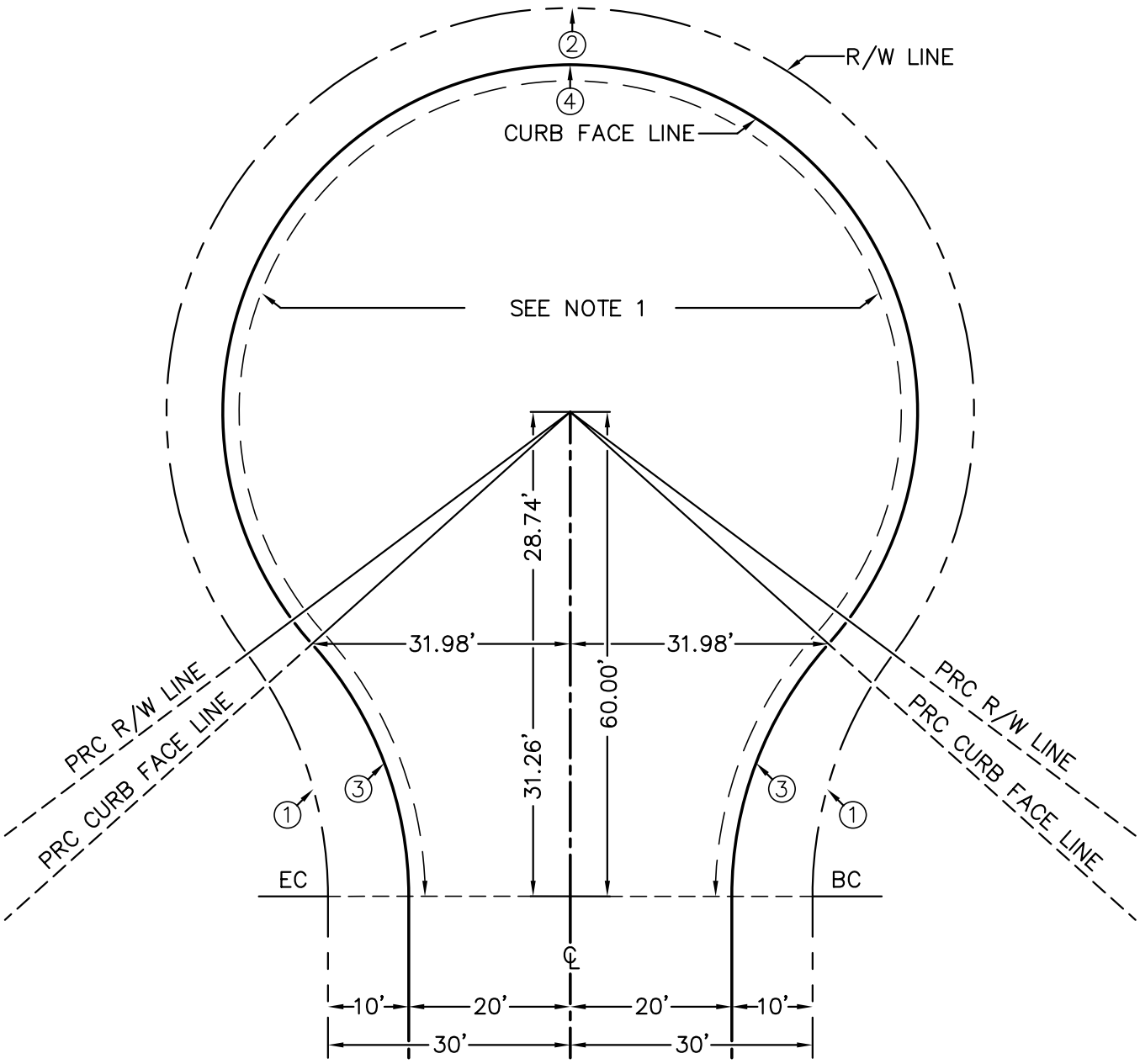


## PLAN

NOT TO SCALE

| | DELTA | RADIUS | LENGTH | TANGENT |
|---|---|---|---|---|
| 1 | 36°52'12" | 50.00 | 32.18 | 16.67 |
| 2 | 253°44'24" | 50.00 | 221.43 | 66.67 |
| 3 | 41°56'50" | 46.76 | 34.23 | 17.92 |
| 4 | 263°53'40" | 43.00 | 198.05 | 47.85 |

## CURVE TABLE

## NOTES:

1. HIGH POINT IN CUL-DE-SACS SHALL BE DESIGNED TO PROVIDE POSITIVE DRAINAGE AND NEED NOT BE A VERTICAL CURVE (MINIMUM 0.6% SLOPE).

| CITY OF VICTORVILLE - ENGINEERING DEPARTMENT | | | | |
|---|---|---|---|---|
| REV. | DATE | BY | **TYPICAL CUL-DE-SAC** | **S-26** |
| | 7/16/88 | J.A.M. | | |
| 1 | 6/1/07 | STAFF | JOHN A. McGLADE, CITY ENGINEER | SHEET 1 OF 1 |

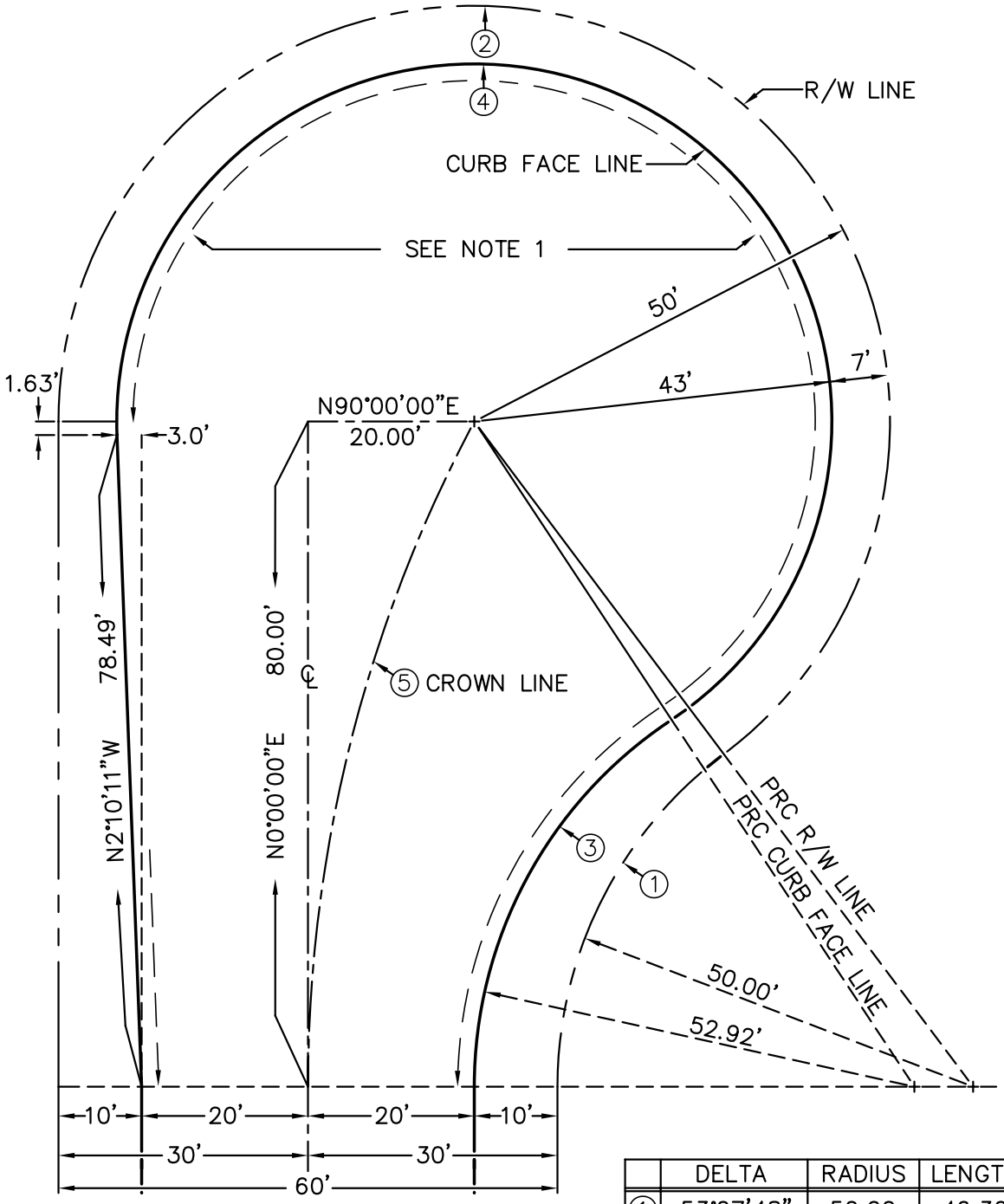


## PLAN

NOT TO SCALE

| | DELTA | RADIUS | LENGTH | TANGENT |
|---|---|---|---|---|
| 1 | 53°07'48" | 50.00 | 46.36 | 25.00 |
| 2 | 233°07'48" | 50.00 | 203.44 | 100.00 |
| 3 | 56°30'58" | 52.92 | 52.20 | 28.44 |
| 4 | 238°41'09" | 43.00 | 179.13 | 76.49 |
| 5 | 28°04'21" | 170.00 | 83.29 | 42.50 |

## CURVE TABLE

## NOTES:

1. HIGH POINT IN CUL-DE-SACS SHALL BE DESIGNED TO PROVIDE POSITIVE DRAINAGE AND NEED NOT BE A VERTICAL CURVE (MINIMUM 0.6% SLOPE).

**CITY OF VICTORVILLE - ENGINEERING DEPARTMENT**

| REV. | DATE | BY | | |
|---|---|---|---|---|
| | 7/16/88 | J.A.M. | **OFFSET CUL-DE-SAC** | **S-27** |
| 1 | 6/1/07 | STAFF | JOHN A. McGLADE, CITY ENGINEER | SHEET 1 OF 1 |

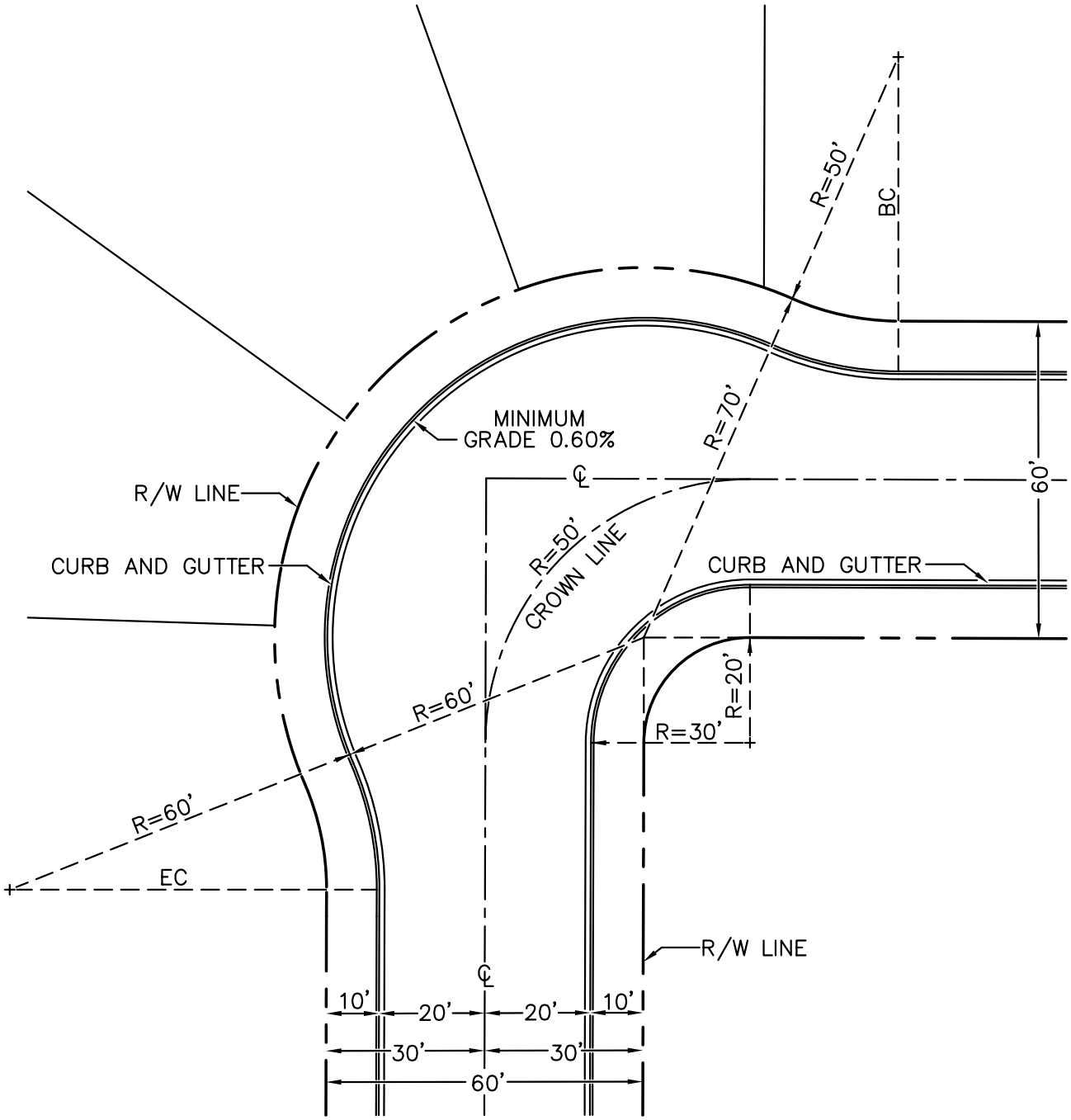


# PLAN

NOT TO SCALE

## NOTES:

1. ANGLE BETWEEN CENTERLINES TO BE 90° ± 10° MAXIMUM.

| CITY OF VICTORVILLE - ENGINEERING DEPARTMENT | | | | |
|---|---|---|---|---|
| REV. | DATE | BY | **STANDARD KNUCKLE** | **S-28** |
| | 6/1/07 | STAFF | | |
| | | | JOHN A. McGLADE, CITY ENGINEER | SHEET 1 OF 1 |

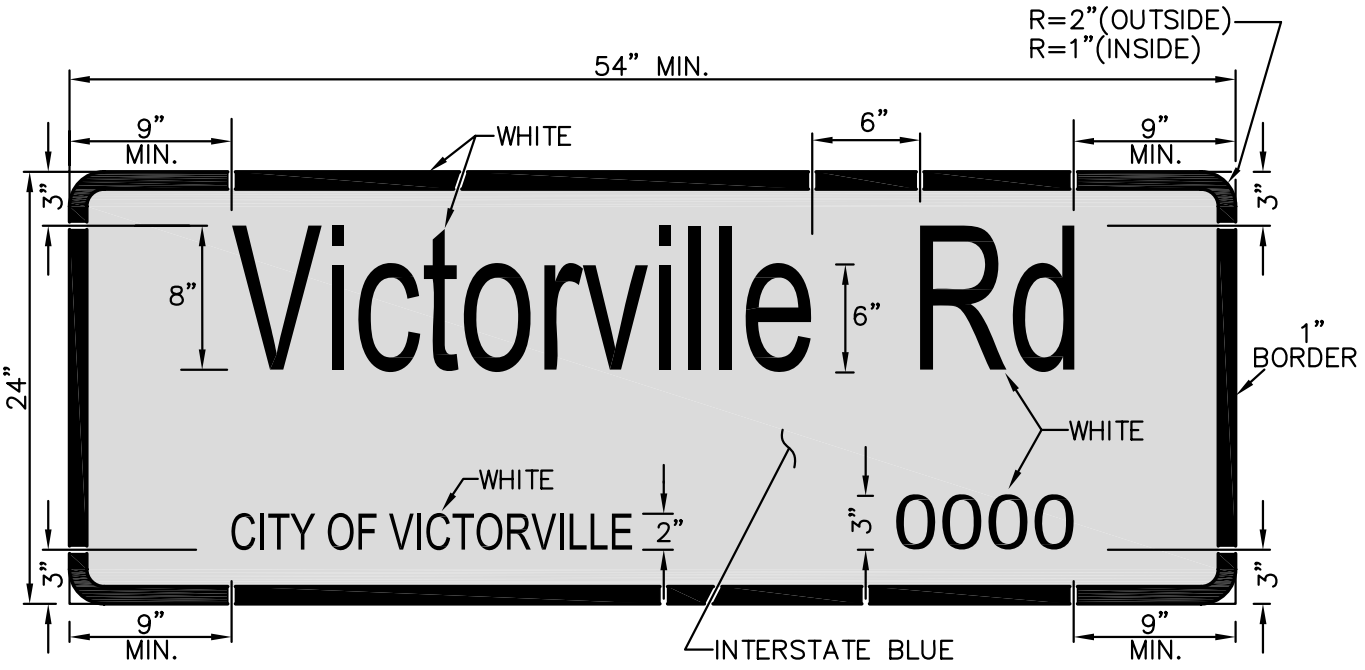


## NOTES:

1. SIGN LENGTH SHALL NOT BE LESS THAN 54" WITH A MINIMUM OF 9" RIGHT AND LEFT MARGINS.
2. ONE INCH WHITE BORDER SHALL BE PROVIDED ALONG THE SIGN PERIMETER WITH 1" INSIDE RADIUS AND 2" OUTSIDE RADIUS.
3. LINE 1 LETTERING SHALL BE 8" UPPER CASE AND 6" LOWER CASE TEXT, SERIES D. LINE 2 LETTERING SHALL BE 2" UPPER CASE TEXT, SERIES C. BLOCK NUMBERS SHALL BE 3", SERIES D OR C.
4. COLORS SHALL BE WHITE ON INTERSTATE BLUE.
5. CONTRACTOR SHALL VERIFY BLOCK NUMBER WITH CITY STAFF PRIOR TO ORDERING STREET NAME SIGN.
6. I.I.S.N.S. SIGN TYPE SHALL BE TYPE A.

| CITY OF VICTORVILLE - ENGINEERING DEPARTMENT | | | | |
|---|---|---|---|---|
| REV. | DATE | BY | **INTERNALLY ILLUMINATED STREET NAME SIGN (I.I.S.N.S.)** | **S-29** |
| | 8/4/06 | R.D. | | |
| | 6/1/07 | STAFF | JOHN A. McGLADE, CITY ENGINEER | SHEET 1 OF 1 |

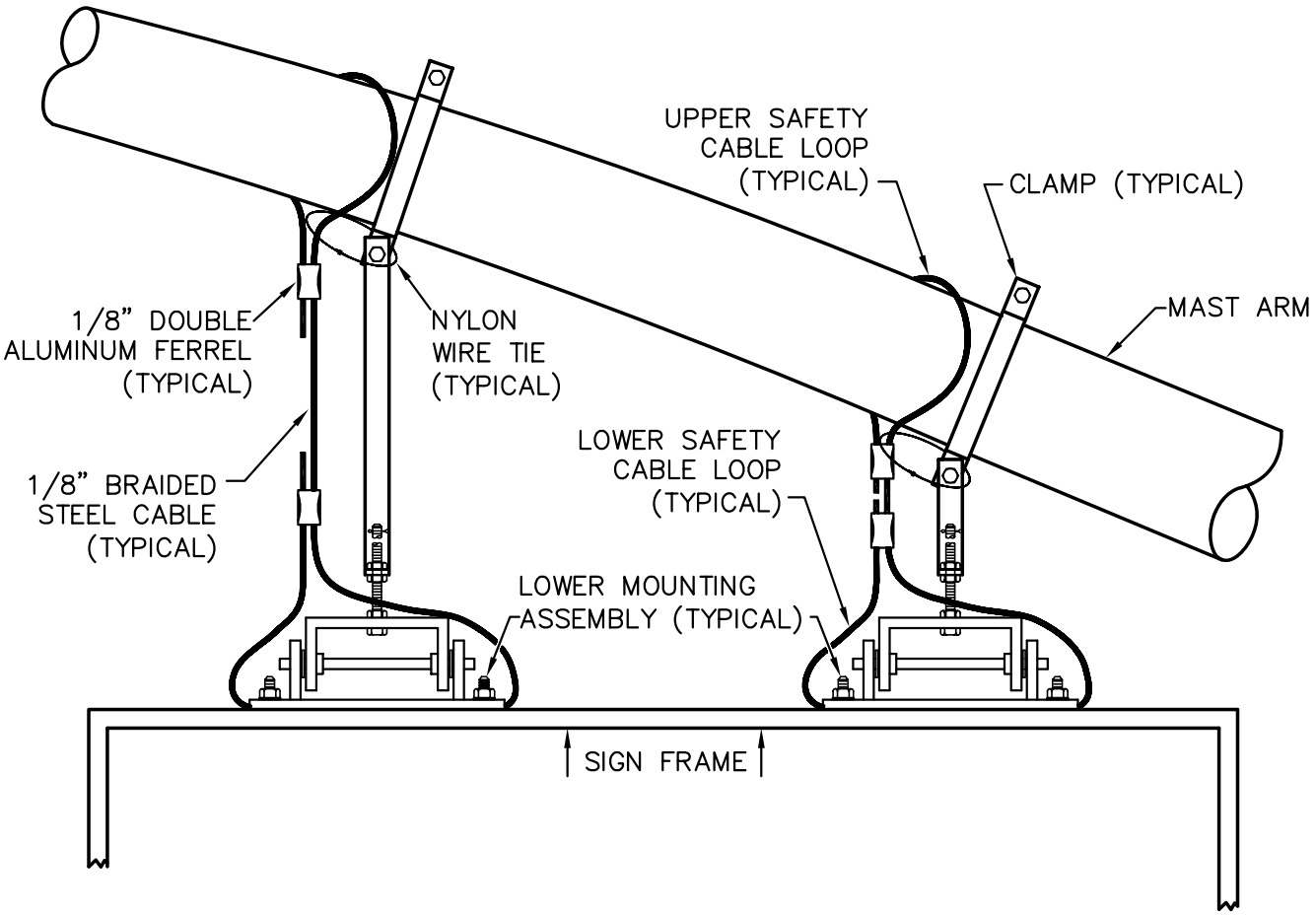


## NOTES:

1. BOTH LOWER ASSEMBLIES SHALL HAVE A SAFETY CABLE INSTALLED.
2. MANUFACTURE EACH SAFETY CABLE FROM ONE CONTINUOUS LENGTH OF 1/8" BRAIDED ZINC COATED STEEL CABLE.
3. UPPER SAFETY CABLE LOOP AROUND MAST ARM SHALL BE ON THE UPPER SIDE OF CLAMP. SECURE UPPER SAFETY CABLE LOOP TO CLAMP WITH A NYLON WIRE TIE.
4. LOWER SAFETY CABLE LOOP SHALL BE INSTALLED BETWEEN LOWER MOUNTING ASSEMBLY AND SIGN FRAME.
5. INSTALL 1/8" DOUBLE ALUMINUM FERRULE ON UPPER AND LOWER LOOP ENDS. EACH FERRULE SHALL BE CRIMPED WITH AWG 1 DIE.
6. INSTALLED SAFETY CABLE SHALL NOT ALLOW SIGN TO FALL IN EXCESS OF ONE INCH.

| CITY OF VICTORVILLE - ENGINEERING DEPARTMENT | | | | |
|---|---|---|---|---|
| REV. | DATE | BY | **INTERNALLY ILLUMINATED STREET NAME SIGN (I.I.S.N.S.) SAFETY CABLE** | **S-30** |
| | 5/19/05 | M.F. R.D. | | |
| | 6/1/07 | STAFF | JOHN A. McGLADE, CITY ENGINEER | SHEET 1 OF 1 |

CITY OF VICTORVILLE
INCORPORATED SEPT. 21, 1962
HOME OF THE SAN BERNARDINO COUNTY FAIR
CALIFORNIA

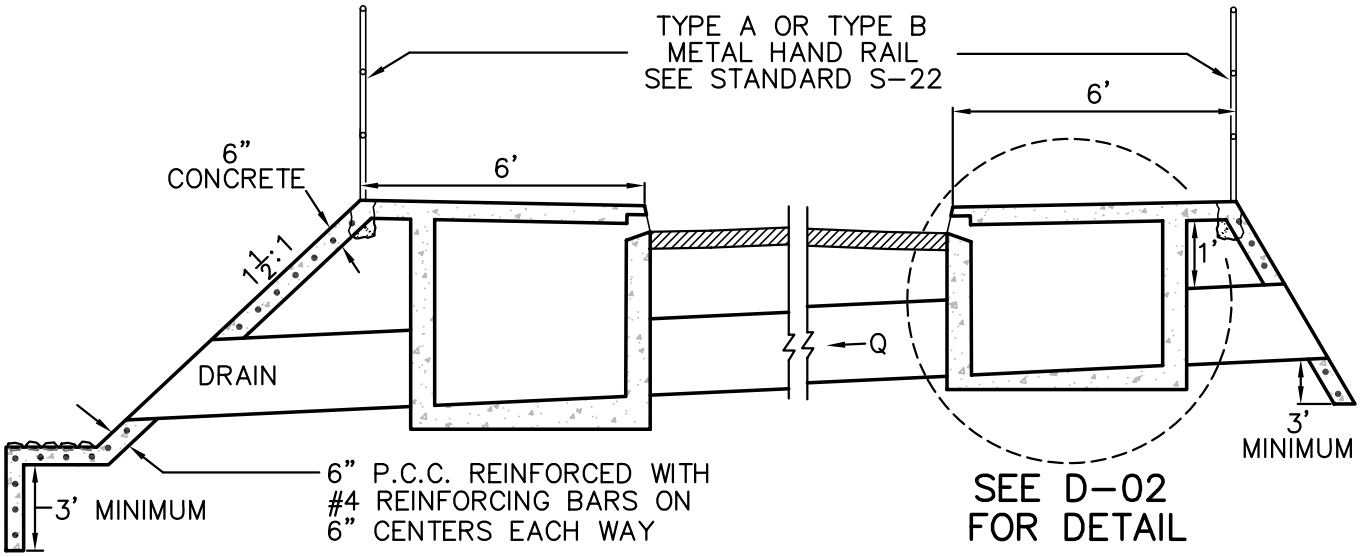


## NOTES:

1. ALL CONCRETE SHALL CONTAIN NOT LESS THAN 550 POUNDS OF CEMENTITIOUS MATERIAL PER CUBIC YARD WITH 4% AIR ENTRAINMENT.
2. DOWNSTREAM CUTOFF WALL SHALL EXTEND THREE FEET BELOW CHANNEL BOTTOM OR AS DIRECTED BY THE CITY ENGINEER.
3. SEE DRAWING S-04 FOR SIDEWALK DETAILS.
4. SEE DRAWING S-01 FOR EXPANSION JOINT AND CURB AND GUTTER DETAILS.
5. CATCH BASIN OUTLET CONNECTION TO CULVERT SHALL BE CONSTRUCTED AS DIRECTED BY THE CITY ENGINEER.
6. WASH CROSSINGS MAY BE USED WHERE APPROVED BY THE CITY. THE WASH CROSSING SHALL BE ABLE TO HANDLE A 100 YEAR STORM FLOW AS A DIP WHEN ACTING WITH THE CULVERT. THE CUT-OFF WALLS SHALL EXTEND OVER THE FULL LENGTH OF SUBMERSION OF THE DIP.
7. ON A MAJOR WASH CROSSING THE DEVELOPER MAY DROP THE CURB FACE AND OMIT THE CATCH BASINS BUT SHALL DELINEATE THE ROADWAY AS DIRECTED BY THE CITY ENGINEER.
8. ROCK SLOPE PROTECTION, CONCRETED ROCK SLOPE PROTECTION OR CONCRETE CHANNEL LINING SHALL BE INSTALLED UPSTREAM AND DOWNSTREAM OF THE CROSSING. THE EXTENT AND THICKNESS TO BE BASED ON FLOW VELOCITIES, APPROVED ENGINEERING PRACTICE AND MINIMUMS SET FORTH ON STANDARD DRAWING S-20.

| CITY OF VICTORVILLE - ENGINEERING DEPARTMENT | | | | |
|---|---|---|---|---|
| REV. | DATE | BY | STANDARD WASH CROSSING | D-01A |
| | 4/3/70 | M.A.T. | | |
| 1 | 6/1/07 | STAFF | JOHN A. McGLADE, CITY ENGINEER | SHEET 1 OF 1 |

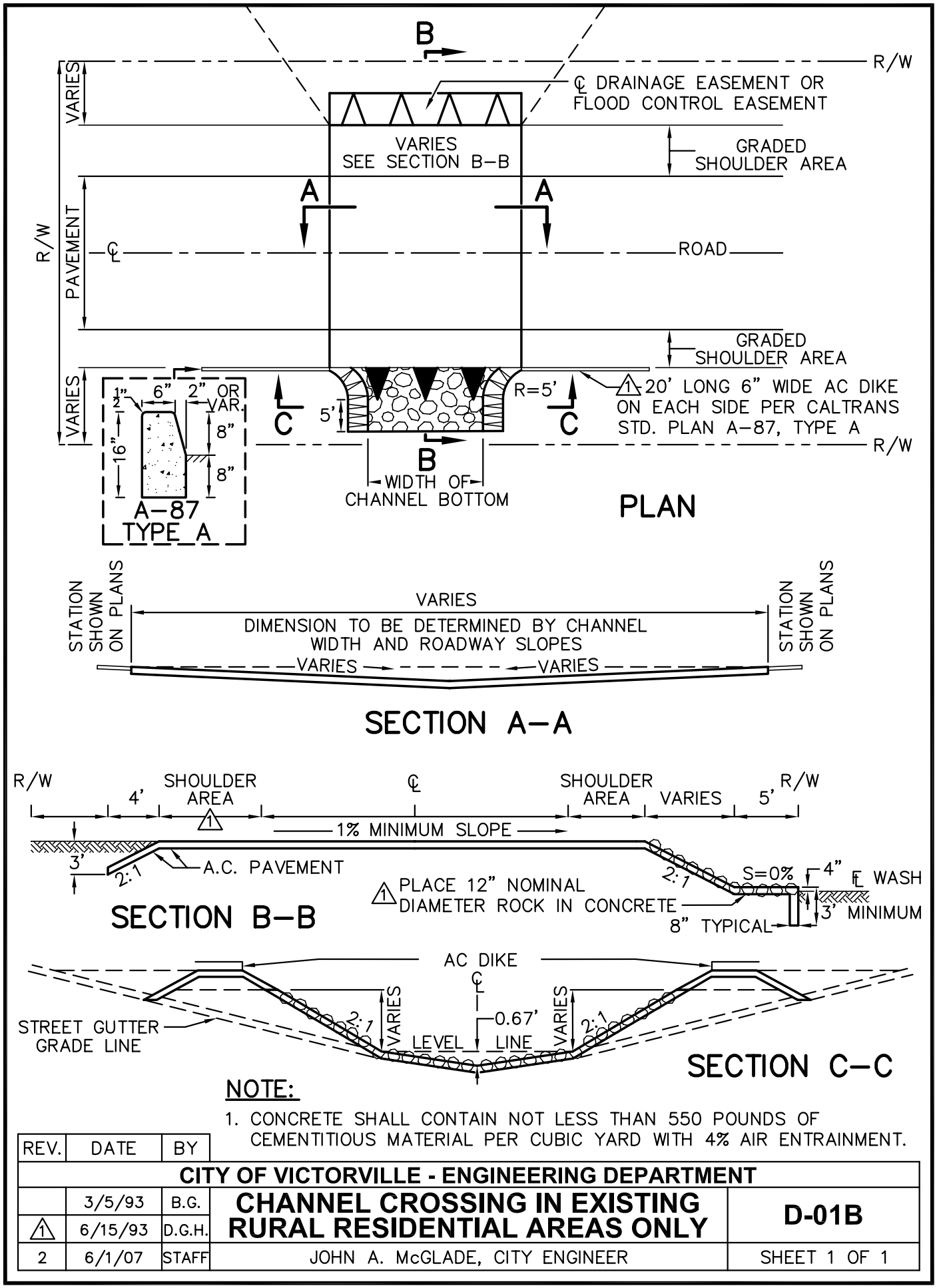


## NOTE:

1. CONCRETE SHALL CONTAIN NOT LESS THAN 550 POUNDS OF CEMENTITIOUS MATERIAL PER CUBIC YARD WITH 4% AIR ENTRAINMENT.

| REV. | DATE | BY | | |
|---|---|---|---|---|
| | | | **CITY OF VICTORVILLE - ENGINEERING DEPARTMENT** | |
| | 3/5/93 | B.G. | **CHANNEL CROSSING IN EXISTING RURAL RESIDENTIAL AREAS ONLY** | **D-01B** |
| 1 | 6/15/93 | D.G.H. | | |
| 2 | 6/1/07 | STAFF | JOHN A. McGLADE, CITY ENGINEER | SHEET 1 OF 1 |

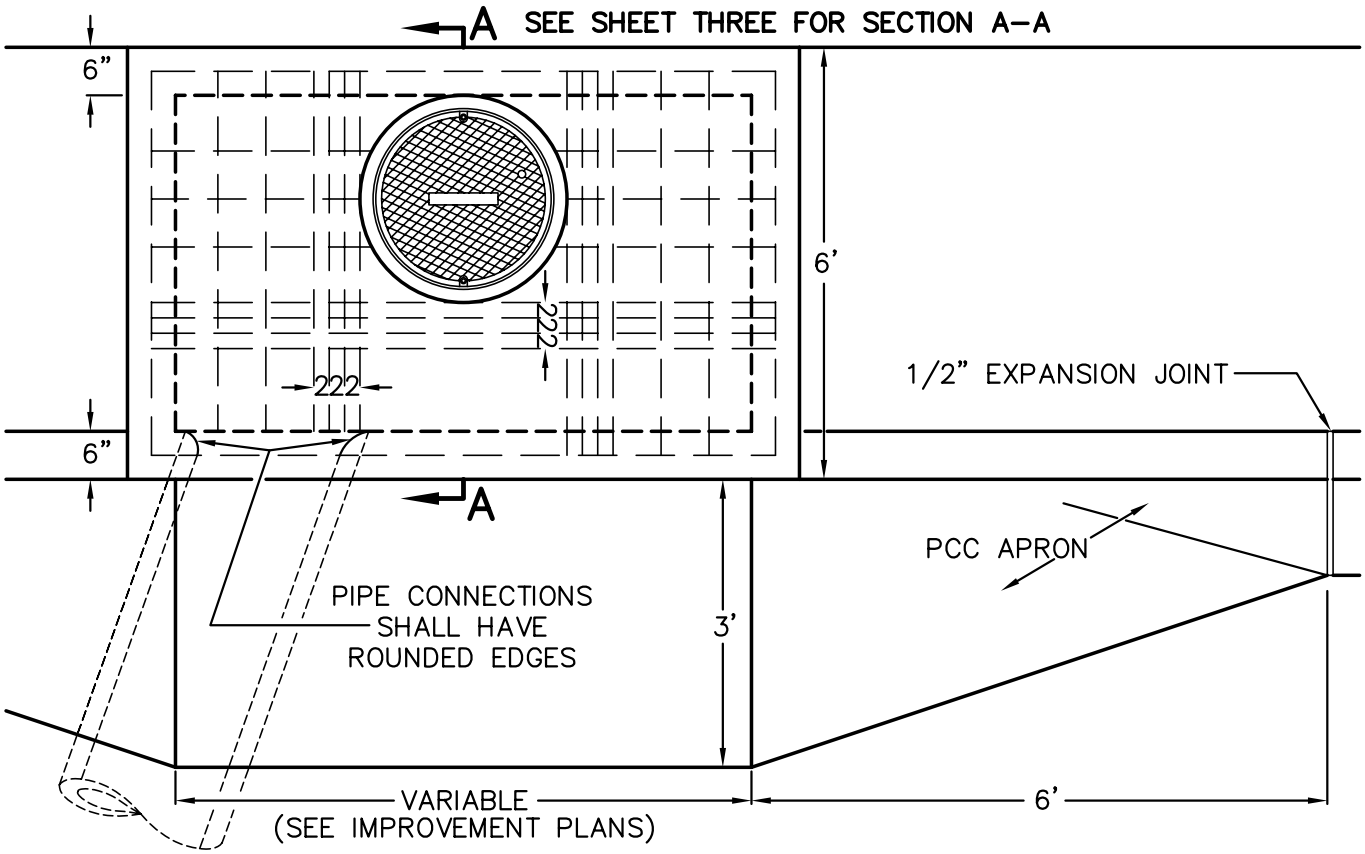


PLAN

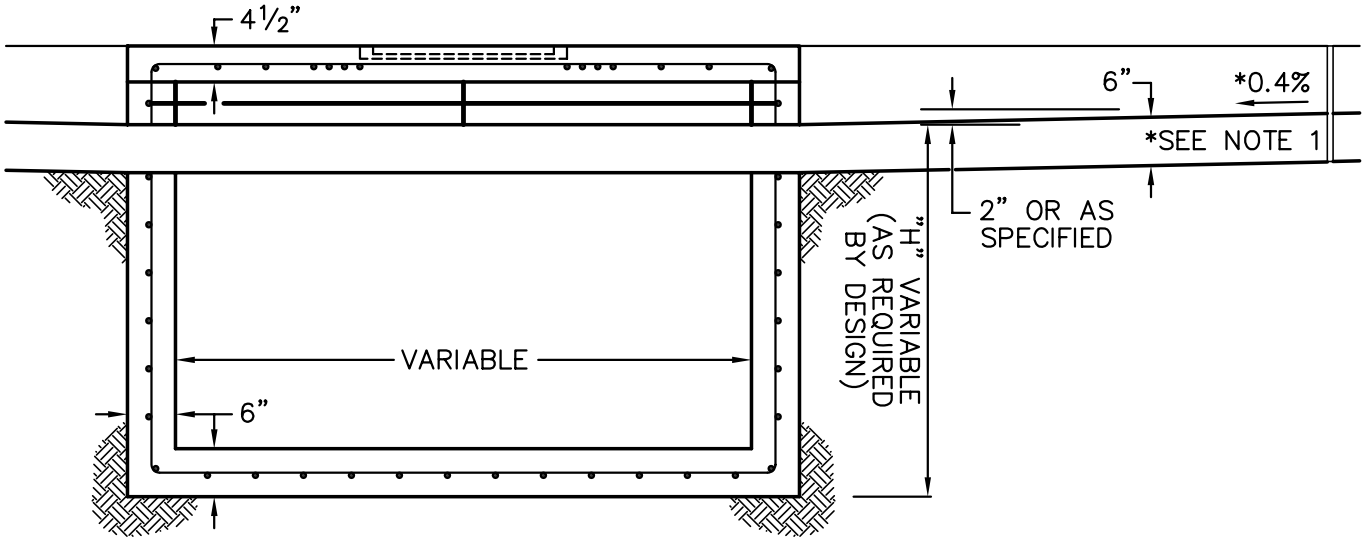


SECTION

## NOTES:

1. THE GUTTER CROSS SLOPE SHALL NOT EXCEED 8.33%. THE GUTTER FLOW LINE SHALL NOT BE LESS THAN 0.3% WITHIN 30 FEET OF THE EDGE OF THE DROP INLET OPENING. THE APRON TRANSITION MAY BE EXTENDED UP TO 15 FEET IN LENGTH.

| REV. | DATE | BY |
|---|---|---|
| | 1/26/65 | J.H.F. |
| NOTES | 5/1/77 | M.A.T. |

| CITY OF VICTORVILLE - ENGINEERING DEPARTMENT | | | | |
|---|---|---|---|---|
| BOX WIDTH | 3/21/78 | X.S.S. | **STANDARD DROP INLET** | **D-02** |
| NOTES | 7/1/94 | D.G.H. | | |
| | 6/1/07 | STAFF | JOHN A. McGLADE, CITY ENGINEER | SHEET 1 OF 3 |

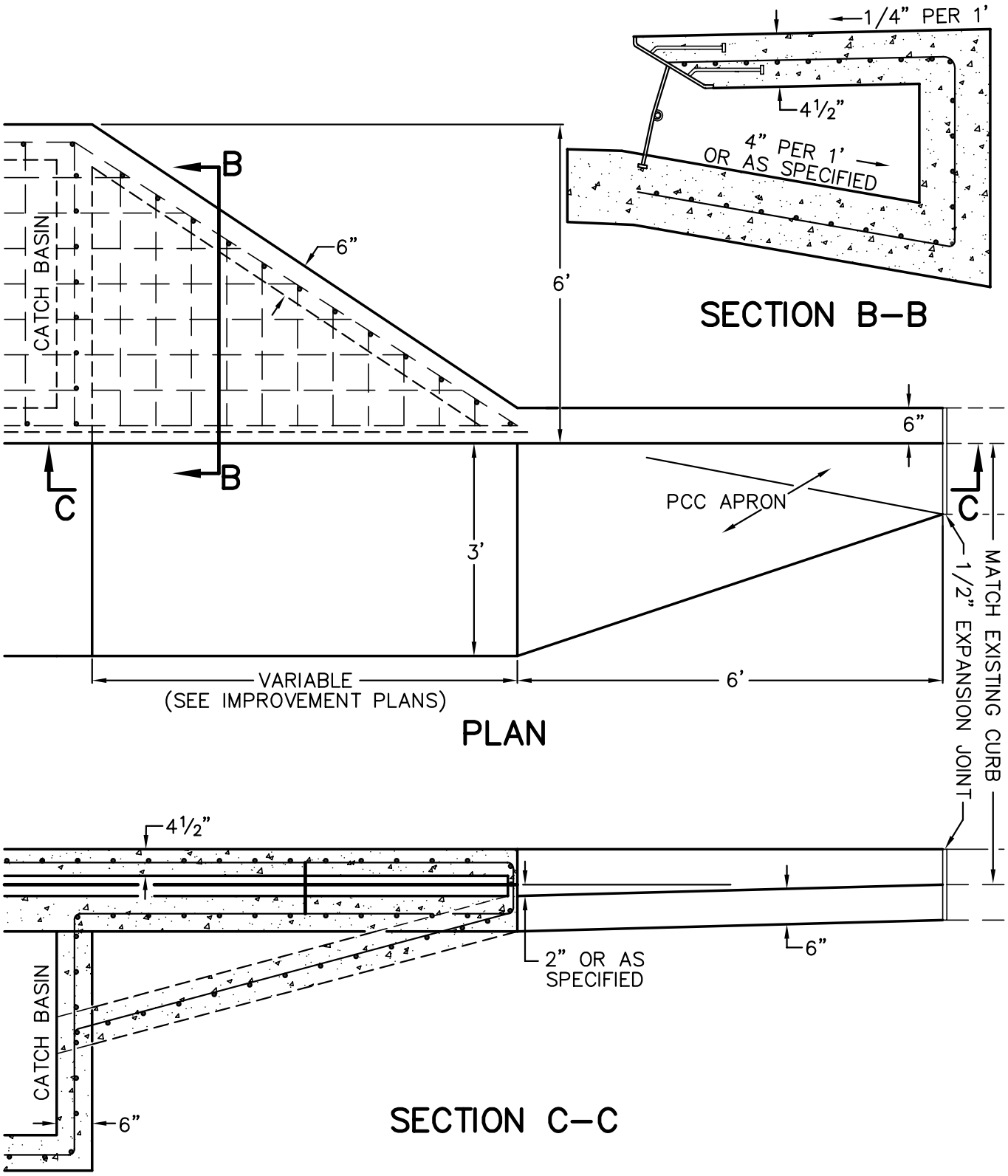


| CITY OF VICTORVILLE - ENGINEERING DEPARTMENT | | | | |
|---|---|---|---|---|
| REV. | DATE | BY | **SIDE INLET FOR STANDARD DROP INLET** | **D-02** |
| | 10/7/76 | M.A.T. | | |
| 1 | 6/1/07 | STAFF | JOHN A. McGLADE, CITY ENGINEER | SHEET 2 OF 3 |

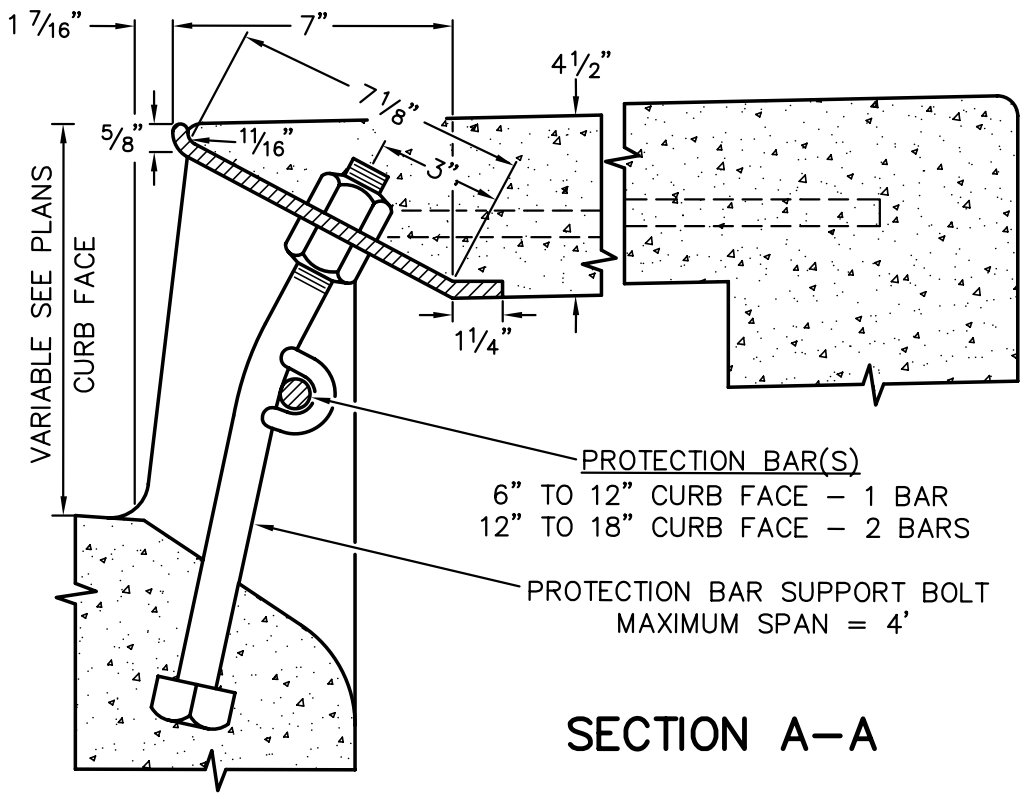


## SECTION A–A

## NOTES:

1. CONCRETE SHALL BE CLASS 1, PER SECTION 90–1.01 OF STANDARD SPECIFICATIONS.
2. ALL CONCRETE SHALL HAVE 4% AIR ENTRAINMENT.
3. SEE DRAWING S–01 FOR EXPANSION JOINT DETAIL.
4. FLOOR SLOPE SHALL BE 1" PER FOOT TOWARD OUTLET OR AS SPECIFIED ON THE PLANS.
5. REINFORCING SHALL CONSIST OF NO. 4 DEFORMED BARS AT 6" CENTERS EACH WAY UNLESS OTHERWISE NOTED.
6. ALL STEEL REINFORCING SPLICES SHALL BE LAPPED 40 DIAMETERS.
7. ALL STEEL REINFORCING JOINTS SHALL BE BENT TO 1" RADIUS AND EITHER CONTINUED OR LAPPED 40 DIAMETERS.
8. COVER SHALL BE BOLTED DOWN WITH 2 SOCKET SET SCREW BOLTS PER DETAILS ON STANDARD DRAWING D–04.
9. FRAME AND COVER SHALL BE ALHAMBRA FOUNDRY NO. A1530B, GALVANIZED, 22" DIAMETER OPENING OR EQUAL.
10. CURB PROTECTION PLATE SHALL BE ALHAMBRA FOUNDRY NO. A3911 OR EQUAL. PROTECTION BAR SHALL BE ALHAMBRA FOUNDRY A1564 OR EQUAL. PROTECTION BAR SUPPORT BOLTS SHALL BE ALHAMBRA FOUNDRY A1572 OR EQUAL.
11. STEPS – NONE REQUIRED WHERE "H" IS 3'6" OR LESS. INSTALL ONE STEP 16"± ABOVE FLOOR WHEN "H" IS 3'6" TO 5'0". WHERE "H" IS MORE THAN 5'0", STEPS SHALL BE EVENLY SPACED AT 12"± INTERVALS FROM 16"± ABOVE FLOOR TO WITHIN 12"± OF THE TOP OF THE BOX. PLACE STEPS IN WALL WITHOUT PIPE OPENINGS.
12. ALL EXPOSED METAL PARTS SHALL BE GALVANIZED.

| REV. | DATE | BY |
|---|---|---|
| | 1/26/65 | J.H.F. |

**CITY OF VICTORVILLE - ENGINEERING DEPARTMENT**

| | | | | |
|---|---|---|---|---|
| NOTES | 5/1/77 | M.A.T. | **STANDARD DROP INLET** | **D-02** |
| NOTES | 7/1/94 | D.G.H. | | |
| | 6/1/07 | STAFF | JOHN A. McGLADE, CITY ENGINEER | SHEET 3 OF 3 |

# BLANK INTENTIONALLY

| CITY OF VICTORVILLE - ENGINEERING DEPARTMENT | | | | |
|---|---|---|---|---|
| REV. | DATE | BY | STANDARD DROP INLET | D-03 |
| | 2/19/76 | X.S.S. | | |
| 1 | 6/1/07 | STAFF | JOHN A. McGLADE, CITY ENGINEER | SHEET 1 OF 1 |

OBSOLETE

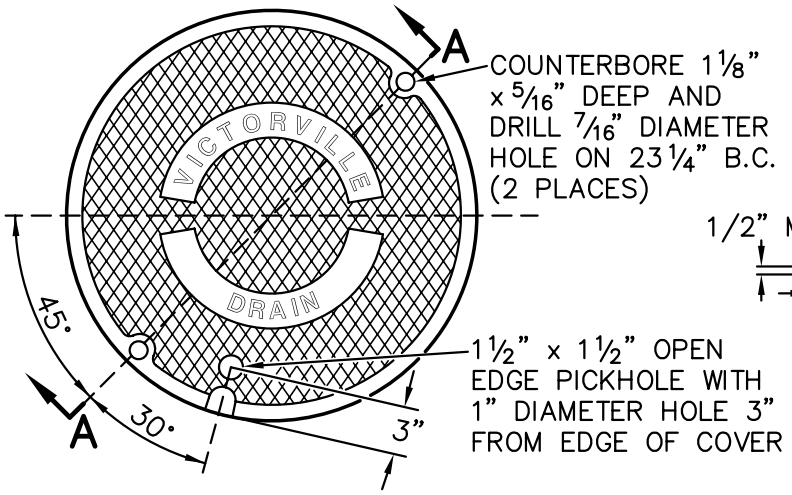


PLATEN COVER TOP VIEW

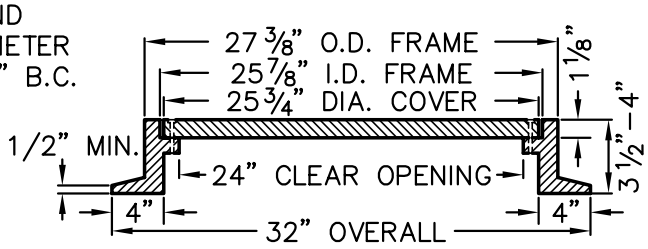


SECTION A–A

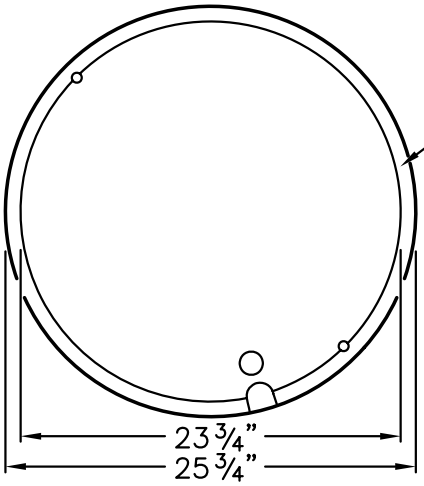


PLATEN COVER BOTTOM VIEW

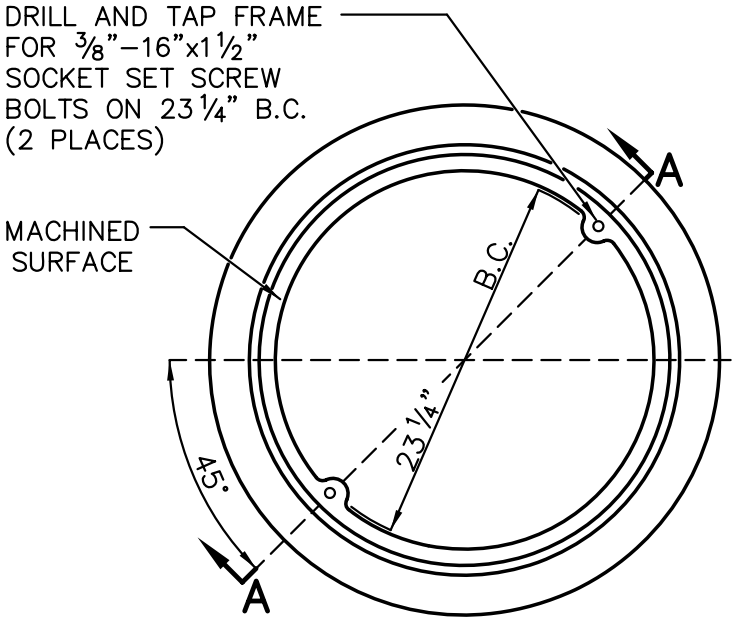


PLAN OF FRAME

## NOTES:

1. MANHOLE FRAME AND COVER TO BE MANUFACTURED FROM CLASS 35 CAST IRON PER ASTM A–48.
2. FRAME AND COVER SHALL BE CAPABLE OF SUPPORTING H–20 WHEEL LOADING.
3. COVER SHALL HAVE CAST INTO TOP IN 1" HIGH MINIMUM BLOCK LETTERS "VICTORVILLE" OR "CITY OF VICTORVILLE" AND "DRAIN". MANUFACTURER'S NAME OR INSIGNIA SHALL BE CAST INTO BOTH FRAME AND COVER.
4. MACHINE MATING SURFACES OF FRAME AND COVER TO PROVIDE UNIFORM EDGE SUPPORT FOR COVER.
5. PAINT FRAME AND COVER WITH BLACK BITUMINOUS PAINT.
6. APPROVED SUPPLIERS: ALHAMBRA FOUNDRY #1254, NEENAH FOUNDRY #R–1593 AND SOUTH BAY FOUNDRY #SBF1253B.

| CITY OF VICTORVILLE - ENGINEERING DEPARTMENT | | | | |
|---|---|---|---|---|
| REV. | DATE | BY | STORM DRAIN MANHOLE FRAME AND COVER | D-04 |
| | 5/18/93 | D.G.H. | | |
| 1 | 6/1/07 | STAFF | JOHN A. McGLADE, CITY ENGINEER | SHEET 1 OF 1 |

## DETAIL FOR MANHOLES IN PAVED SURFACES

## DETAIL FOR MANHOLES IN EASEMENTS*

* IN AREAS WHERE MANHOLE IS IN A DIRT EASEMENT, A MINIMUM 12" WIDE BY 12" DEEP PAD OR PRE-CAST FRAME AND LID WILL BE REQUIRED AROUND MANHOLE LID AND FRAME

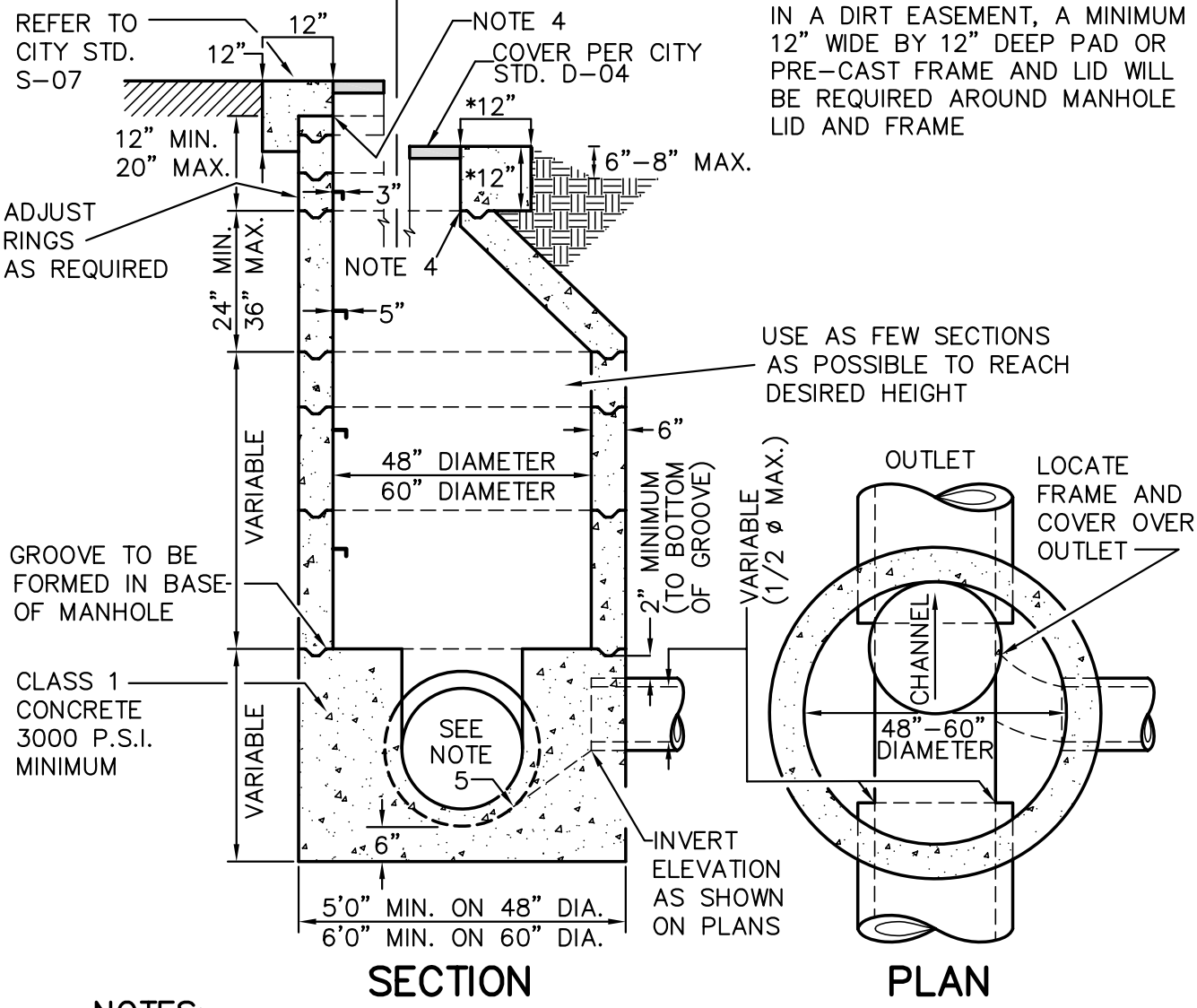


SECTION

PLAN

## NOTES:

1. ALL SECTIONS TO BE WASHED TO REMOVE ANY LOOSE MATERIAL AND WHILE STILL WET THEY ARE TO BE SET IN 1:3 MORTAR TRIMMED SMOOTH INSIDE AND OUTSIDE AT TIME OF SETTING INCLUDING FRAME, EXCEPT IN NOTE 3.
2. CONCRETE FOR MANHOLE SECTIONS 3000 P.S.I. MINIMUM.
3. ON ALL EASEMENT MANHOLES, THE CONTRACTOR SHALL ANCHOR FRAME TO CONCRETE SECTIONS BY THE USE OF EPOXY OR OTHER METHOD AS APPROVED BY THE CITY ENGINEER.
4. CONCRETE AROUND AND UNDER FRAME SHALL HAVE A MIX IN ACCORDANCE WITH THE SPECIFICATIONS AND SHALL BE CURED WITH WHITE PIGMENTED CURING COMPOUND.
5. INVERT CHANNELS, SHELF AND GROOVE SHALL BE FORMED MONOLITHICALLY WITH THE MANHOLE BASE. NO REWORKING OF CONCRETE WHICH HAS PARTIALLY HARDENED.

| CITY OF VICTORVILLE - ENGINEERING DEPARTMENT | | | | |
|---|---|---|---|---|
| REV. | DATE | BY | PRECAST STORM DRAIN MANHOLE | D-05 |
| | 9/1/75 | STAFF | | |
| 1 | 6/1/07 | STAFF | JOHN A. MCGLADE, CITY ENGINEER | SHEET 1 OF 1 |

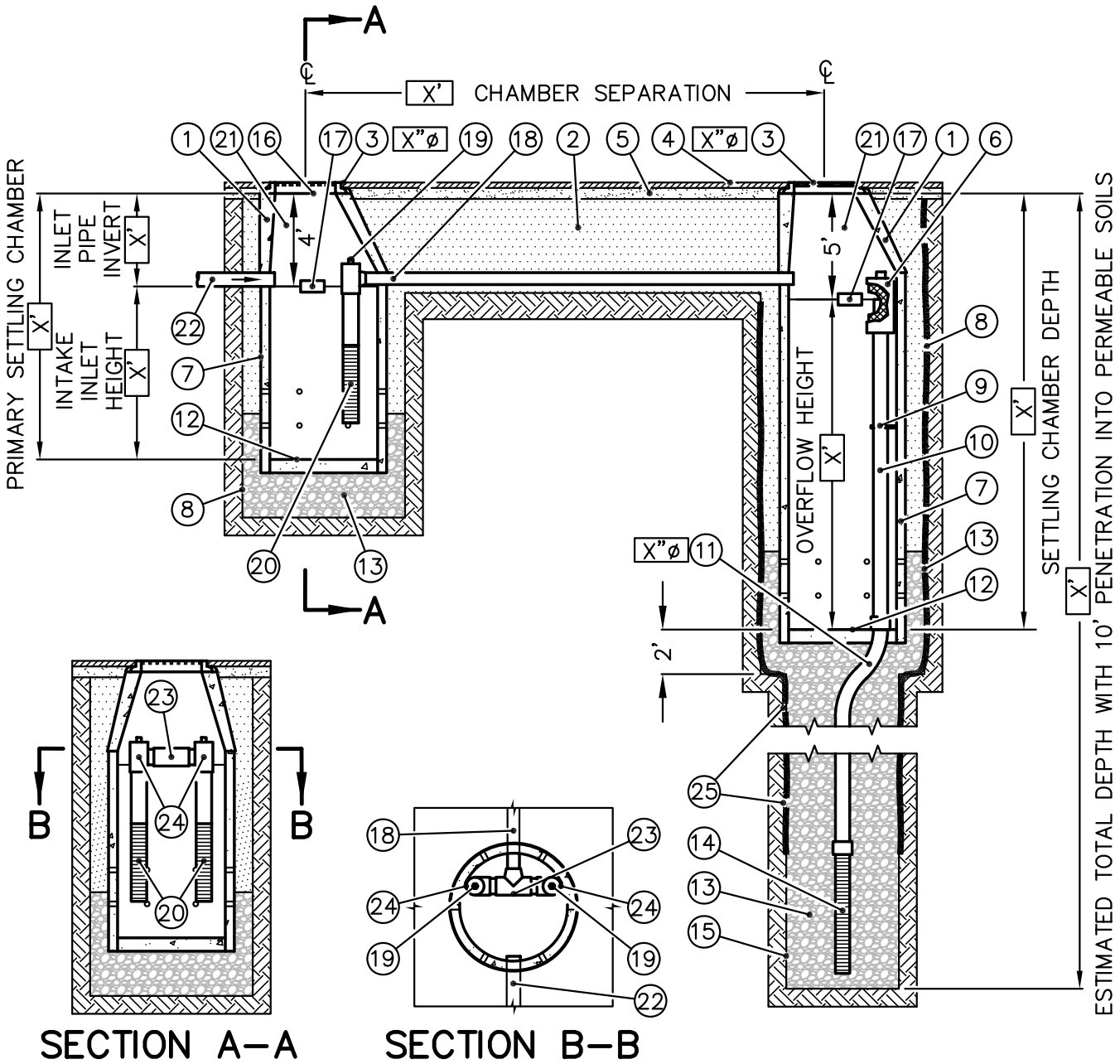


## NOTES:

1. CONSTRUCT DRY WELLS PER THE BID SPECIFICATIONS AND PLANS, COMPLETE IN PLACE. DETAILS ARE AS FOLLOWS:

INTERCEPTOR DEPTH = 10 FEET
OVERALL DEPTH = 75 FEET
SETTLING CHAMBER DEPTH = 18 FEET
EFFECTIVE SETTLING CAPACITY = 13 FEET

CONNECTOR PIPE = 4'ø
OVERFLOW PIPE = 6"ø
C.I. RING AND GRATE = 30"ø

| CITY OF VICTORVILLE - ENGINEERING DEPARTMENT | | | | |
|---|---|---|---|---|
| REV. | DATE | BY | DRY WELL SYSTEM DETAILS | D-06 |
| | 9/25/00 | J.Z. | | |
| 1 | 6/1/07 | STAFF | JOHN A. McGLADE, CITY ENGINEER | SHEET 1 OF 2 |

## ITEM NUMBERS:

1. MANHOLE CONE – MODIFIED FLAT BOTTOM. CITY OF VICTORVILLE STD. SS–1, MANHOLE SECTIONS AND CONES COULD BE SUBSTITUTED UPON WRITTEN APPROVAL.
2. STABILIZED BACKFILL – 2 SACK CONCRETE SLURRY.
3. BOLTED RING & GRATE/COVER – DIAMETER AS SHOWN. CLEAN CAST IRON WITH WORDING "CITY OF VICTORVILLE DRYWELL" IN RAISED LETTERS. BOLTED IN 2 LOCATIONS AND SECURED TO CONE WITH MORTAR. RIM ELEVATION ±0.02' OF PLANS, PER CITY STD. D–04.
4. GRADED BASIN OR PAVING (BY OTHERS).
5. COMPACTED BASE MATERIAL (BY OTHERS).
6. DEBRIS SHIELD – ROLLED 16 GA. STEEL X 24" LENGTH WITH VENTED ANTI–SIPHON AND INTERNAL .265" MAX. SWO FLATTENED EXPANDED STEEL SCREEN X 12" LENGTH. FUSION BONDED EPOXY COATED.
7. PRE–CAST LINER – 4000 PSI CONCRETE 48" ID. X 54" OD. CENTER IN HOLE AND ALIGN SECTIONS TO MAXIMIZE BEARING SURFACE.
8. MIN. 6' ø DRILLED SHAFT.
9. SUPPORT BRACKET – FORMED 12 GA. STEEL. FUSION BONDED EPOXY COATED.
10. OVERFLOW PIPE – SCH. 40 PVC MATED TO DRAINAGE PIPE AT BASE SEAL.
11. DRAINAGE PIPE – ADS HIGHWAY GRADE WITH COUPLER. SUSPEND PIPE DURING BACKFILL OPERATIONS TO PREVENT BUCKLING OR BREAKAGE. DIAMETER AS NOTED.
12. BASE SEAL – 4" THICK CONCRETE SLURRY.
13. ROCK – CLEAN AND WASHED 3/8" AGGREGATE.
14. DRAINAGE SCREEN – SCH. 40 PVC 0.120" SLOTTED WELL SCREEN WITH 32 SLOTS PER ROW/FT. DIAMETER VARIES 96" OVERALL LENGTH WITH COUPLER.
15. MIN. 4' ø SHAFT – DRILLED TO MAINTAIN PERMEABILITY OF DRAINAGE SOILS.
16. FABRIC SEAL – U.V. RESISTANT GEOTEXTILE – TO BE REMOVED BY CUSTOMER AT PROJECT COMPLETION.
17. ABSORBENT – HYDROPHOBIC PETROCHEMICAL SPONGE. MIN. 128 OZ. CAPACITY.
18. CONNECTOR PIPE – 4" ø SCH. 40 PVC .
19. VENTED ANTI–SIPHON INTAKE.
20. INTAKE SCREEN – 6" ø SCH. 40 PVC 0.120" MODIFIED SLOTTED WELL SCREEN WITH 32 SLOTS PER ROW/FT. 48" OVERALL LENGTH WITH END CAP.
21. FREEBOARD DEPTH VARIES WITH INLET PIPE ELEVATION. INCREASE PRIMARY/SECONDARY SETTLING CHAMBER DEPTHS AS NEEDED TO MAINTAIN ALL INLET PIPE ELEVATIONS ABOVE CONNECTOR PIPE OVERFLOW.
22. GUTTER DRAIN INLET – 8" SCH 40 PVC, PER CITY STD. D–07.
23. 6" X 4" REDUCING TEE – SCH. 40 PVC, WITH FLOW REGULATOR.
24. 6" TEE – SCH. 40 PVC.
25. NON–WOVEN GEOTEXTILE SLEEVE, MIRAFI 140 NL. MIN. 6 FT ø, HELD APPROX. 10 FEET OFF THE BOTTOM OF EXCAVATION.

| CITY OF VICTORVILLE - ENGINEERING DEPARTMENT | | | | |
|---|---|---|---|---|
| REV. | DATE | BY | DRY WELL SYSTEM DETAILS | D-06 |
| | 9/25/00 | J.Z. | | |
| 1 | 6/1/07 | STAFF | JOHN A. McGLADE, CITY ENGINEER | SHEET 2 OF 2 |

## NOTES:

1. ACTUAL LOCATIONS OF INTERCEPTOR AND DRY WELL WOULD BE FIELD DETERMINED BASED ON LOCATION OF UTILITY LINES AND OTHER OBSTRUCTIONS/LANDSCAPING.
2. DIMENSIONS SHOWN ON THIS SHEET WILL BE USED AS A GUIDE ONLY.
3. CONTRACTOR TO CALL U.S.A. AT LEAST 48 HOURS PRIOR TO FIELD DETERMINATION OF DRY WELL AND INTERCEPTOR.
4. CONTRACTOR TO TAKE DUE PRECAUTIONARY MEASURES TO PROTECT ALL UTILITY LINES AND OBSTRUCTIONS/LANDSCAPING DURING ACTUAL CONSTRUCTION.
5. CONTRACTOR TO RESTORE SITE AS CLOSE AS POSSIBLE BACK TO THE ORIGINAL CONDITIONS AFTER COMPLETION OF WORK.
6. CONCRETE SHALL BE MINOR CONCRETE PER SECTION 90 OF STANDARD SPECIFICATIONS.
7. GUTTER DRAIN DETAIL IS ALHAMBRA FOUNDRY A–1292 GUTTER DRAIN.
8. ALL EXPOSED METAL PARTS SHALL BE GALVANIZED.
9. △1 FOR ALL CONSTRUCTION, INLET OPENINGS SHALL HAVE A LAYER OF FILTER FABRIC OVER THE OPENING AND A SAND BAG CHECK DAM AND BE MAINTAINED IN PLACE UNTIL CONSTRUCTION IS COMPLETED AND STREETS HAVE BEEN CLEANED.
10. △1 CONTRACTOR HAS TO CLEAN AND REMOVE THE SILT AND DEBRIS BUILDUP IN THE INTERCEPTOR AND DRY WELLS PRIOR TO ACCEPTANCE BY THE CITY.

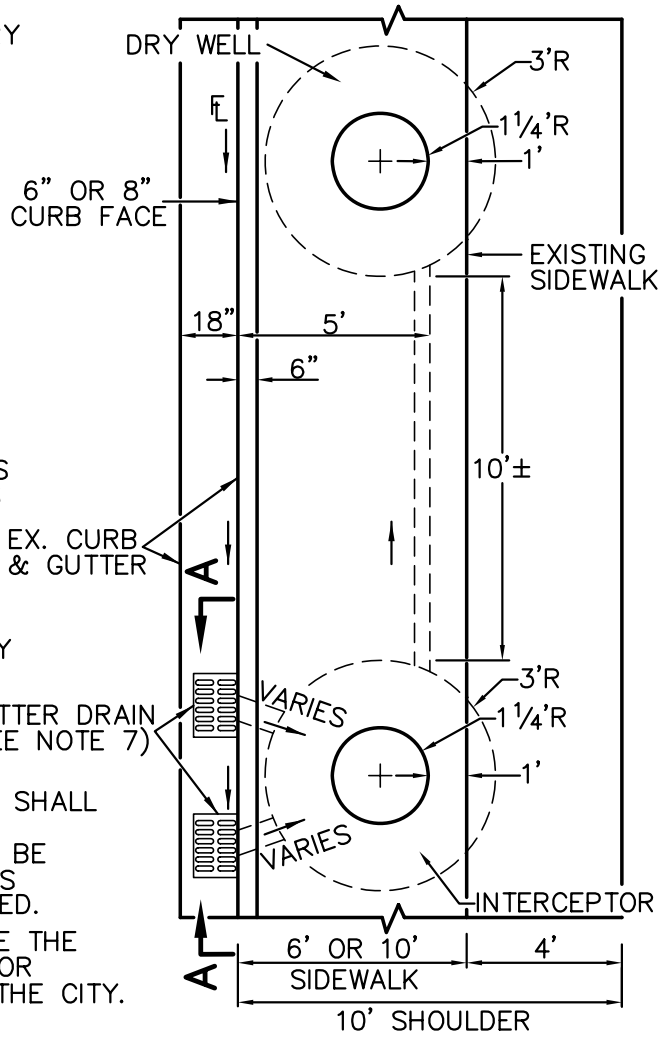


**PLAN**
NOT TO SCALE

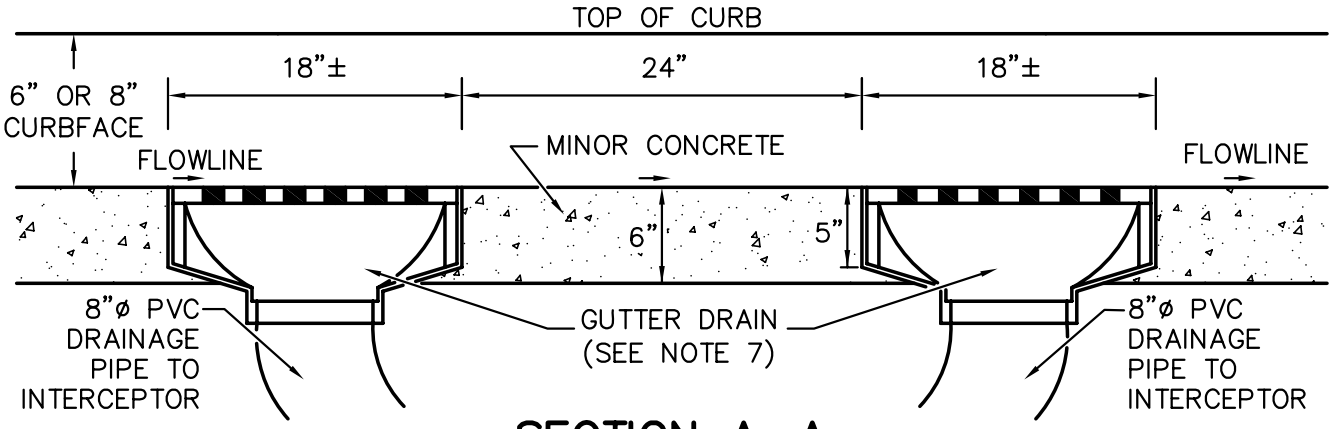


**SECTION A–A**
NOT TO SCALE

| REV. | DATE | BY | | |
|---|---|---|---|---|
| | | | **CITY OF VICTORVILLE - ENGINEERING DEPARTMENT** | |
| | 3/11/02 | J.Z. | **DRY WELL AND INTERCEPTOR** | **D-07** |
| △1 | 10/1/02 | J.Z. | | |
| 2 | 6/1/07 | STAFF | JOHN A. McGLADE, CITY ENGINEER | SHEET 1 OF 1 |

CITY OF VICTORVILLE
INCORPORATED SEPT. 21, 1962
HOME OF THE SAN BERNARDINO COUNTY FAIR
CALIFORNIA

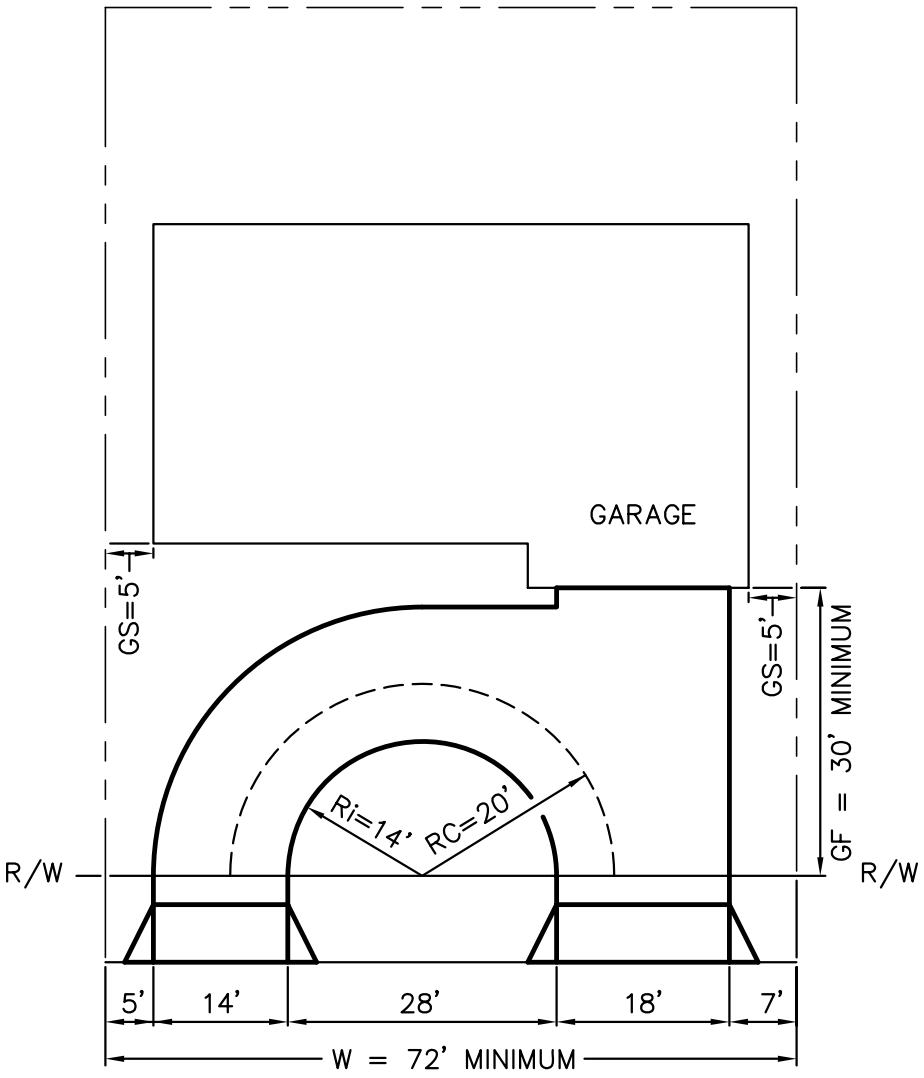


# PLAN

NOT TO SCALE

| W | GF | GS | Rc | Ri |
|---|---|---|---|---|
| 72' | 30' | 5' | 20' | 14' |

# TABLE

## NOTES:

1. ALL DIMENSIONS ARE MINIMUMS AND ARE IN FEET.
   W = LOT WIDTH (AT PROPERTY LINE).
   GF = FRONT YARD SETBACK TO GARAGE WALL AND HOUSE FROM PROPERTY LINE.
   GS = SIDE YARD SETBACK FROM GARAGE WALL TO NEAREST PROPERTY LINE.
   Rc = CENTER TURNING RADIUS OF DRIVEWAY. MINIMUM 20 FEET.
   Ri = INSIDE TURNING RADIUS OF DRIVEWAY.

| CITY OF VICTORVILLE - ENGINEERING DEPARTMENT | | | | |
|---|---|---|---|---|
| REV. | DATE | BY | CIRCULAR DRIVEWAY | GS-01 |
| | 1/5/06 | B.W.G. | | |
| 1 | 6/1/07 | STAFF | JOHN A. McGLADE, CITY ENGINEER | SHEET 1 OF 2 |

## NOTES:

1. ALL DIMENSIONS ARE MINIMUMS.
2. DIMENSIONS MAY NEED TO BE INCREASED TO ALLOW FOR SLOPES ON THE SIDE YARD OR FRONT YARD, MAXIMUM GRADE OF THE DRIVEWAY, LOT DRAINAGE, PLACEMENT OF FIRE HYDRANTS AND/OR STREETLIGHTS OR OTHER CONDITIONS.
3. ASSUMED WIDTH OF DRIVEWAY AND DRIVEWAY APPROACH FOR A TWO-CAR GARAGE IS 18 FEET. DRIVEWAY WIDTHS AND DIMENSIONS FROM EDGE OF DRIVEWAY TO OUTSIDE SURFACE OF GARAGE WALL WILL VARY.
4. ASSUMED DRIVEWAY WIDTH IS 12 FEET AND DRIVEWAY APPROACH WIDTH IS 14 FEET FOR CIRCULAR DRIVEWAY SECOND APPROACH.
5. MINIMUM YARD SETBACKS ARE SUBJECT TO CITY REQUIREMENTS INCLUDING THE MUNICIPAL CODE, THE GENERAL PLAN OR THE SPECIFIC PLAN (IF APPLICABLE).
6. FRONT YARD SETBACK TO GARAGE WALL AND HOUSE FROM PROPERTY LINE (GF) AND SIDE YARD SETBACK FROM GARAGE WALL TO NEAREST PROPERTY LINE (GS) AND THE SETBACKS TO THE GARAGE AND HOUSE ARE NOT NECESSARILY THE SAME AS THE MINIMUM FRONT YARD AND SIDE YARD SETBACKS REQUIRED.
7. THE FOOTPRINT OF THE HOUSE SHOWN IN THIS STANDARD IS AN EXAMPLE ONLY. FOOTPRINTS WILL VARY BUT MUST MEET SETBACK REQUIREMENTS.
8. THE CIRCULAR LAYOUT NEEDS TO BE DESIGNED FOR A SPECIFIC LOT AND INCORPORATED INTO THE PRECISE GRADING PLAN FOR THE LOT.
9. RETAINING WALLS, CURBS AND DRAINAGE SWALES MAY BE REQUIRED TO ACCOMODATE THE DRIVEWAY IMPROVEMENTS ON A LOT. THE PRECISE GRADING PLAN FOR THE LOT MUST SHOW IMPROVEMENTS NECESSARY TO CONSTRUCT THE DRIVEWAY.
10. DRIVEWAY APPROACHES SHALL COMPLY WITH CITY OF VICTORVILLE STANDARD DRAWING NO. S-02.
11. MAXIMUM DRIVEWAY LONGITUDINAL SLOPE (90 DEGREES TO STREET) IS 12%.
12. MAXIMUM DRIVEWAY CROSS SLOPE (PARALLEL TO STREET) IS 6%.
13. MAXIMUM CHANGE OF SLOPE IN DRIVEWAY GRADE BREAK IS 12%.
14. FOR CONSTRUCTION OF CIRCULAR DRIVEWAYS AT EXISTING RESIDENCES, THE CITY ENGINEER MAY GRANT EXCEPTIONS TO THE STANDARDS.

| CITY OF VICTORVILLE - ENGINEERING DEPARTMENT | | | | |
|---|---|---|---|---|
| REV. | DATE | BY | **CIRCULAR DRIVEWAY** | **GS-01** |
| | 1/5/06 | B.W.G. | | |
| 1 | 6/1/07 | STAFF | JOHN A. McGLADE, CITY ENGINEER | SHEET 2 OF 2 |

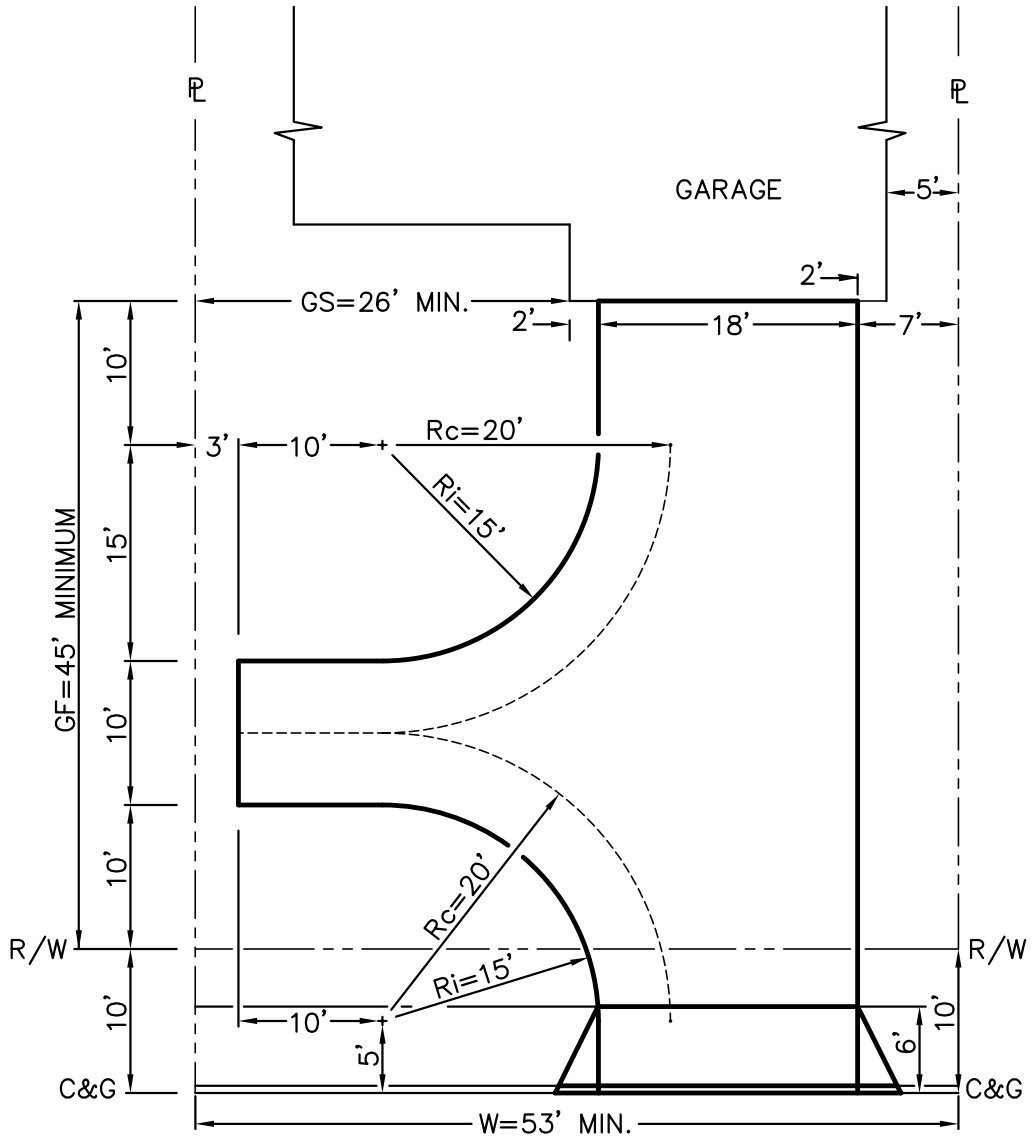


**GARAGE FACING STREET**
**HAMMERHEAD TO LOT EXTERIOR**

# PLAN

N.T.S.

| W | GF | GS | Rc | Ri |
|---|---|---|---|---|
| 53' | 45' | 26' | 20' | 15' |

# TABLE

## ABBREVIATIONS

W = LOT WIDTH (AT PROPERTY LINE).
GF = FRONT YARD SETBACK TO GARAGE WALL AND HOUSE FROM PROPERTY LINE.
GS = SIDE YARD SETBACK TO GARAGE WALL FROM PROPERTY LINE NEAREST HAMMERHEAD.
Rc = CENTER TURNING RADIUS OF DRIVEWAY. MINIMUM 20 FEET.
Ri = INSIDE TURNING RADIUS OF DRIVEWAY.

| CITY OF VICTORVILLE - ENGINEERING DEPARTMENT | | | | |
|---|---|---|---|---|
| REV. | DATE | BY | **HAMMERHEAD DRIVEWAY TYPE 1** | **GS-02** |
| | 1/5/06 | B.W.G. | | |
| 1 | 6/1/07 | STAFF | JOHN A. McGLADE, CITY ENGINEER | SHEET 1 OF 2 |

## NOTES:

1. ALL DIMENSIONS ARE MINIMUMS.
2. DIMENSIONS MAY NEED TO BE INCREASED TO ALLOW FOR SLOPES ON THE SIDE YARD OR FRONT YARD, MAXIMUM GRADE OF THE DRIVEWAY, LOT DRAINAGE, PLACEMENT OF FIRE HYDRANTS AND/OR STREETLIGHTS OR OTHER CONDITIONS.
3. ASSUMED WIDTH OF DRIVEWAY AND DRIVEWAY APPROACH FOR A TWO-CAR GARAGE IS 18 FEET. DRIVEWAY WIDTHS AND DIMENSIONS FROM EDGE OF DRIVEWAY TO OUTSIDE SURFACE OF GARAGE WALL WILL VARY.
4. MINIMUM YARD SETBACKS ARE SUBJECT TO CITY REQUIREMENTS INCLUDING THE MUNICIPAL CODE, THE GENERAL PLAN OR THE SPECIFIC PLAN (IF APPLICABLE).
5. FRONT YARD SETBACK TO GARAGE WALL AND HOUSE FROM PROPERTY LINE (GF) AND SIDE YARD SETBACK TO GARAGE WALL FROM PROPERTY LINE NEAREST HAMMERHEAD (GS) AND THE SETBACKS TO THE GARAGE ARE NOT NECESSARILY THE SAME AS THE MINIMUM FRONT YARD AND SIDE YARD SETBACKS REQUIRED.
6. THE FOOTPRINT OF THE HOUSE SHOWN IN THIS STANDARD IS AN EXAMPLE ONLY. FOOTPRINTS WILL VARY BUT MUST MEET SETBACK REQUIREMENTS.
7. THE HAMMERHEAD LAYOUT NEEDS TO BE DESIGNED FOR A SPECIFIC LOT AND INCORPORATED INTO THE PRECISE GRADING PLAN FOR THE LOT.
8. RETAINING WALLS, CURBS AND DRAINAGE SWALES MAY BE REQUIRED TO ACCOMODATE THE DRIVEWAY IMPROVEMENTS ON A LOT. THE PRECISE GRADING PLAN FOR THE LOT MUST SHOW IMPROVEMENTS NECESSARY TO CONSTRUCT THE DRIVEWAY.
9. DRIVEWAY APPROACH SHALL COMPLY WITH CITY OF VICTORVILLE STANDARD DRAWING NO. S-02 WHERE CURB AND GUTTER EXISTS.
10. MAXIMUM DRIVEWAY LONGITUDINAL SLOPE (90 DEGREES TO STREET) IS 12%.
11. MAXIMUM DRIVEWAY CROSS SLOPE (PARALLEL TO STREET) IS 6%.
12. MAXIMUM CHANGE OF SLOPE IN DRIVEWAY GRADE BREAK IS 12%.
13. FOR CONSTRUCTION OF HAMMERHEAD DRIVEWAYS AT EXISTING RESIDENCES, THE CITY ENGINEER MAY GRANT EXCEPTIONS TO THE STANDARDS.

| CITY OF VICTORVILLE - ENGINEERING DEPARTMENT | | | | |
|---|---|---|---|---|
| REV. | DATE | BY | **HAMMERHEAD DRIVEWAY TYPE 1** | **GS-02** |
| | 1/5/06 | B.W.G. | | |
| 1 | 6/1/07 | STAFF | JOHN A. McGLADE, CITY ENGINEER | SHEET 2 OF 2 |

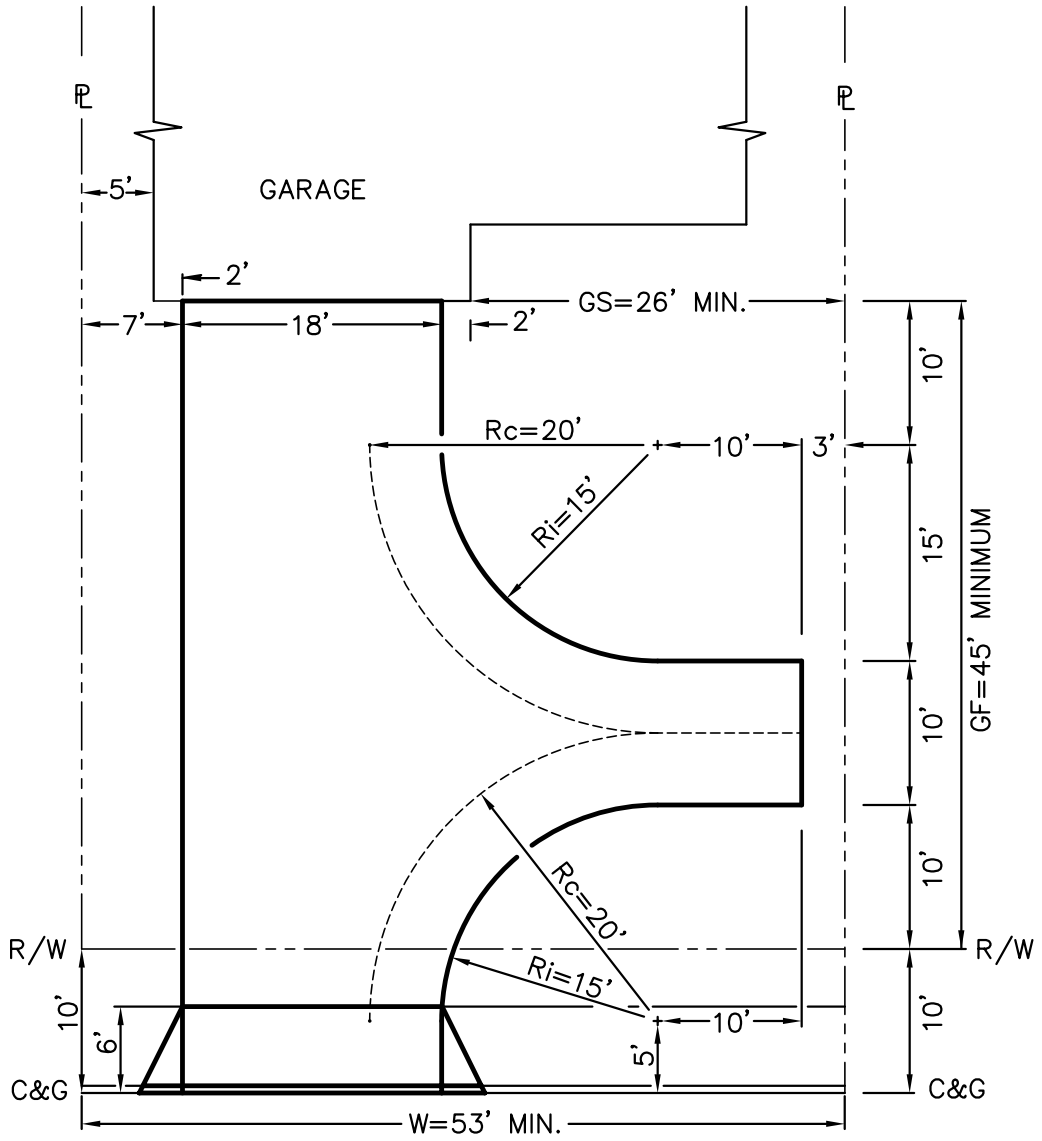


**GARAGE FACING STREET**
**HAMMERHEAD TO LOT INTERIOR**

# PLAN

N.T.S.

| W | GF | GS | Rc | Ri |
|---|---|---|---|---|
| 53' | 45' | 26' | 20' | 15' |

# TABLE

## ABBREVIATIONS

W = LOT WIDTH (AT PROPERTY LINE).
GF = FRONT YARD SETBACK TO GARAGE WALL AND HOUSE FROM PROPERTY LINE.
GS = SIDE YARD SETBACK TO GARAGE WALL FROM PROPERTY LINE NEAREST HAMMERHEAD.
Rc = CENTER TURNING RADIUS OF DRIVEWAY. MINIMUM 20 FEET.
Ri = INSIDE TURNING RADIUS OF DRIVEWAY.

| CITY OF VICTORVILLE - ENGINEERING DEPARTMENT | | | | |
|---|---|---|---|---|
| REV. | DATE | BY | **HAMMERHEAD DRIVEWAY TYPE 2** | **GS-03** |
| | 1/5/06 | B.W.G. | | |
| 1 | 6/1/07 | STAFF | JOHN A. McGLADE, CITY ENGINEER | SHEET 1 OF 2 |

## NOTES:

1. ALL DIMENSIONS ARE MINIMUMS.
2. DIMENSIONS MAY NEED TO BE INCREASED TO ALLOW FOR SLOPES ON THE SIDE YARD OR FRONT YARD, MAXIMUM GRADE OF THE DRIVEWAY, LOT DRAINAGE, PLACEMENT OF FIRE HYDRANTS AND/OR STREETLIGHTS OR OTHER CONDITIONS.
3. ASSUMED WIDTH OF DRIVEWAY AND DRIVEWAY APPROACH FOR A TWO-CAR GARAGE IS 18 FEET. DRIVEWAY WIDTHS AND DIMENSIONS FROM EDGE OF DRIVEWAY TO OUTSIDE SURFACE OF GARAGE WALL WILL VARY.
4. MINIMUM YARD SETBACKS ARE SUBJECT TO CITY REQUIREMENTS INCLUDING THE MUNICIPAL CODE, THE GENERAL PLAN OR THE SPECIFIC PLAN (IF APPLICABLE).
5. FRONT YARD SETBACK TO GARAGE WALL AND HOUSE FROM PROPERTY LINE (GF) AND SIDE YARD SETBACK TO GARAGE WALL FROM PROPERTY LINE NEAREST HAMMERHEAD (GS) AND THE SETBACKS TO THE GARAGE ARE NOT NECESSARILY THE SAME AS THE MINIMUM FRONT YARD AND SIDE YARD SETBACKS REQUIRED.
6. THE FOOTPRINT OF THE HOUSE SHOWN IN THIS STANDARD IS AN EXAMPLE ONLY. FOOTPRINTS WILL VARY BUT MUST MEET SETBACK REQUIREMENTS.
7. THE HAMMERHEAD LAYOUT NEEDS TO BE DESIGNED FOR A SPECIFIC LOT AND INCORPORATED INTO THE PRECISE GRADING PLAN FOR THE LOT.
8. RETAINING WALLS, CURBS AND DRAINAGE SWALES MAY BE REQUIRED TO ACCOMODATE THE DRIVEWAY IMPROVEMENTS ON A LOT. THE PRECISE GRADING PLAN FOR THE LOT MUST SHOW IMPROVEMENTS NECESSARY TO CONSTRUCT THE DRIVEWAY.
9. DRIVEWAY APPROACH SHALL COMPLY WITH CITY OF VICTORVILLE STANDARD DRAWING NO. S-02 WHERE CURB AND GUTTER EXISTS.
10. MAXIMUM DRIVEWAY LONGITUDINAL SLOPE (90 DEGREES TO STREET) IS 12%.
11. MAXIMUM DRIVEWAY CROSS SLOPE (PARALLEL TO STREET) IS 6%.
12. MAXIMUM CHANGE OF SLOPE IN DRIVEWAY GRADE BREAK IS 12%.
13. FOR CONSTRUCTION OF HAMMERHEAD DRIVEWAYS AT EXISTING RESIDENCES, THE CITY ENGINEER MAY GRANT EXCEPTIONS TO THE STANDARDS.

| CITY OF VICTORVILLE - ENGINEERING DEPARTMENT | | | | |
|---|---|---|---|---|
| REV. | DATE | BY | **HAMMERHEAD DRIVEWAY TYPE 2** | **GS-03** |
| | 1/5/06 | B.W.G. | | |
| 1 | 6/1/07 | STAFF | JOHN A. McGLADE, CITY ENGINEER | SHEET 2 OF 2 |

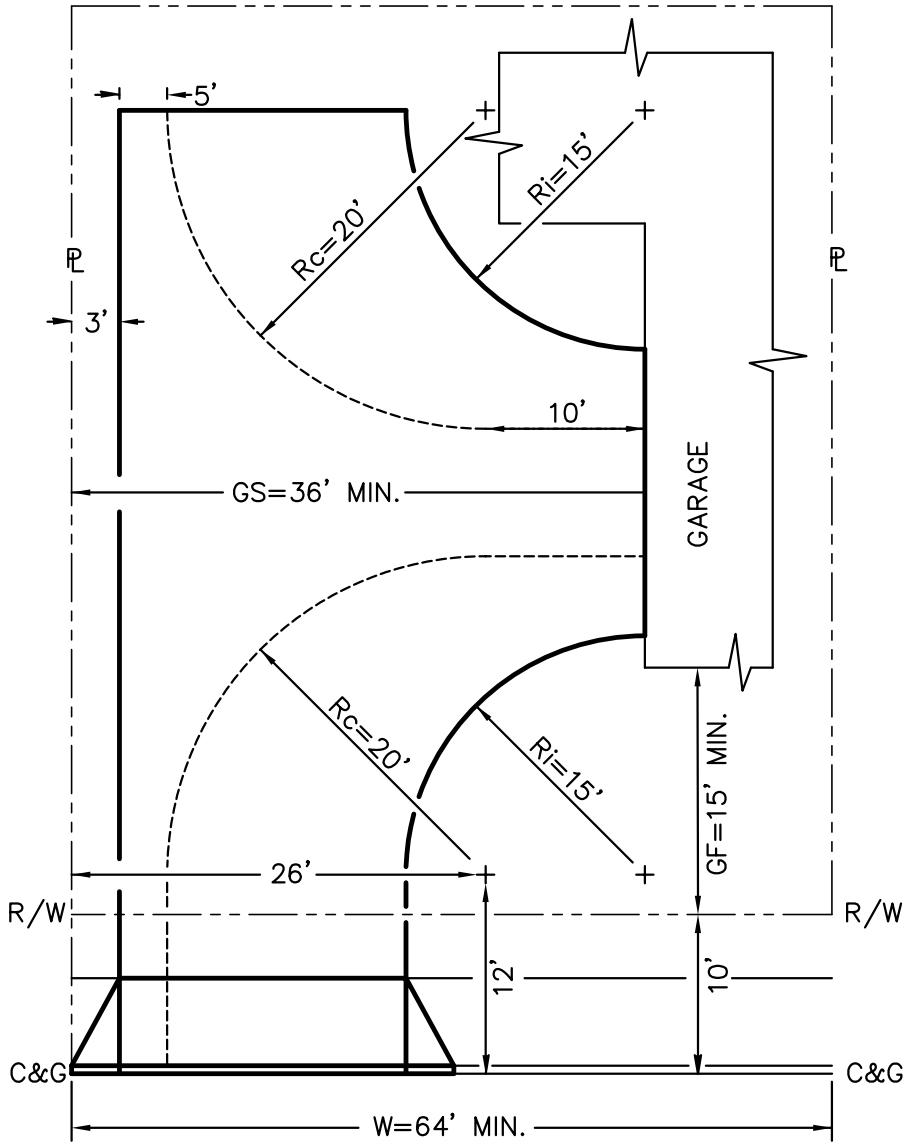


GARAGE FACING SIDE
HAMMERHEAD TO BACK OF LOT

## PLAN

N.T.S.

| W | GF | GS | Rc | Ri |
|---|---|---|---|---|
| 64' | 15' | 36' | 20' | 15' |

## TABLE

## ABBREVIATIONS

W = LOT WIDTH (AT PROPERTY LINE).
GF = FRONT YARD SETBACK TO GARAGE WALL AND HOUSE FROM PROPERTY LINE.
GS = SIDE YARD SETBACK TO GARAGE WALL FROM PROPERTY LINE NEAREST HAMMERHEAD.
Rc = CENTER TURNING RADIUS OF DRIVEWAY. MINIMUM 20 FEET.
Ri = INSIDE TURNING RADIUS OF DRIVEWAY.

| CITY OF VICTORVILLE - ENGINEERING DEPARTMENT | | | | |
|---|---|---|---|---|
| REV. | DATE | BY | HAMMERHEAD DRIVEWAY TYPE 3 | GS-04 |
| | 1/5/06 | B.W.G. | | |
| 1 | 6/1/07 | STAFF | JOHN A. McGLADE, CITY ENGINEER | SHEET 1 OF 2 |

## NOTES:

1. ALL DIMENSIONS ARE MINIMUMS.
2. DIMENSIONS MAY NEED TO BE INCREASED TO ALLOW FOR SLOPES ON THE SIDE YARD OR FRONT YARD, MAXIMUM GRADE OF THE DRIVEWAY, LOT DRAINAGE, PLACEMENT OF FIRE HYDRANTS AND/OR STREETLIGHTS OR OTHER CONDITIONS.
3. ASSUMED WIDTH OF DRIVEWAY AND DRIVEWAY APPROACH FOR A TWO-CAR GARAGE IS 18 FEET. DRIVEWAY WIDTHS AND DIMENSIONS FROM EDGE OF DRIVEWAY TO OUTSIDE SURFACE OF GARAGE WALL WILL VARY.
4. MINIMUM YARD SETBACKS ARE SUBJECT TO CITY REQUIREMENTS INCLUDING THE MUNICIPAL CODE, THE GENERAL PLAN OR THE SPECIFIC PLAN (IF APPLICABLE).
5. FRONT YARD SETBACK TO GARAGE WALL AND HOUSE FROM PROPERTY LINE (GF) AND SIDE YARD SETBACK TO GARAGE WALL FROM PROPERTY LINE NEAREST HAMMERHEAD (GS) AND THE SETBACKS TO THE GARAGE ARE NOT NECESSARILY THE SAME AS THE MINIMUM FRONT YARD AND SIDE YARD SETBACKS REQUIRED.
6. THE FOOTPRINT OF THE HOUSE SHOWN IN THIS STANDARD IS AN EXAMPLE ONLY. FOOTPRINTS WILL VARY BUT MUST MEET SETBACK REQUIREMENTS.
7. THE HAMMERHEAD LAYOUT NEEDS TO BE DESIGNED FOR A SPECIFIC LOT AND INCORPORATED INTO THE PRECISE GRADING PLAN FOR THE LOT.
8. RETAINING WALLS, CURBS AND DRAINAGE SWALES MAY BE REQUIRED TO ACCOMODATE THE DRIVEWAY IMPROVEMENTS ON A LOT. THE PRECISE GRADING PLAN FOR THE LOT MUST SHOW IMPROVEMENTS NECESSARY TO CONSTRUCT THE DRIVEWAY.
9. DRIVEWAY APPROACH SHALL COMPLY WITH CITY OF VICTORVILLE STANDARD DRAWING NO. S-02 WHERE CURB AND GUTTER EXISTS.
10. MAXIMUM DRIVEWAY LONGITUDINAL SLOPE (90 DEGREES TO STREET) IS 12%.
11. MAXIMUM DRIVEWAY CROSS SLOPE (PARALLEL TO STREET) IS 6%.
12. MAXIMUM CHANGE OF SLOPE IN DRIVEWAY GRADE BREAK IS 12%.
13. FOR CONSTRUCTION OF HAMMERHEAD DRIVEWAYS AT EXISTING RESIDENCES, THE CITY ENGINEER MAY GRANT EXCEPTIONS TO THE STANDARDS.

| CITY OF VICTORVILLE - ENGINEERING DEPARTMENT | | | | |
|---|---|---|---|---|
| REV. | DATE | BY | **HAMMERHEAD DRIVEWAY TYPE 3** | **GS-04** |
| | 1/5/06 | B.W.G. | | |
| 1 | 6/1/07 | STAFF | JOHN A. McGLADE, CITY ENGINEER | SHEET 2 OF 2 |

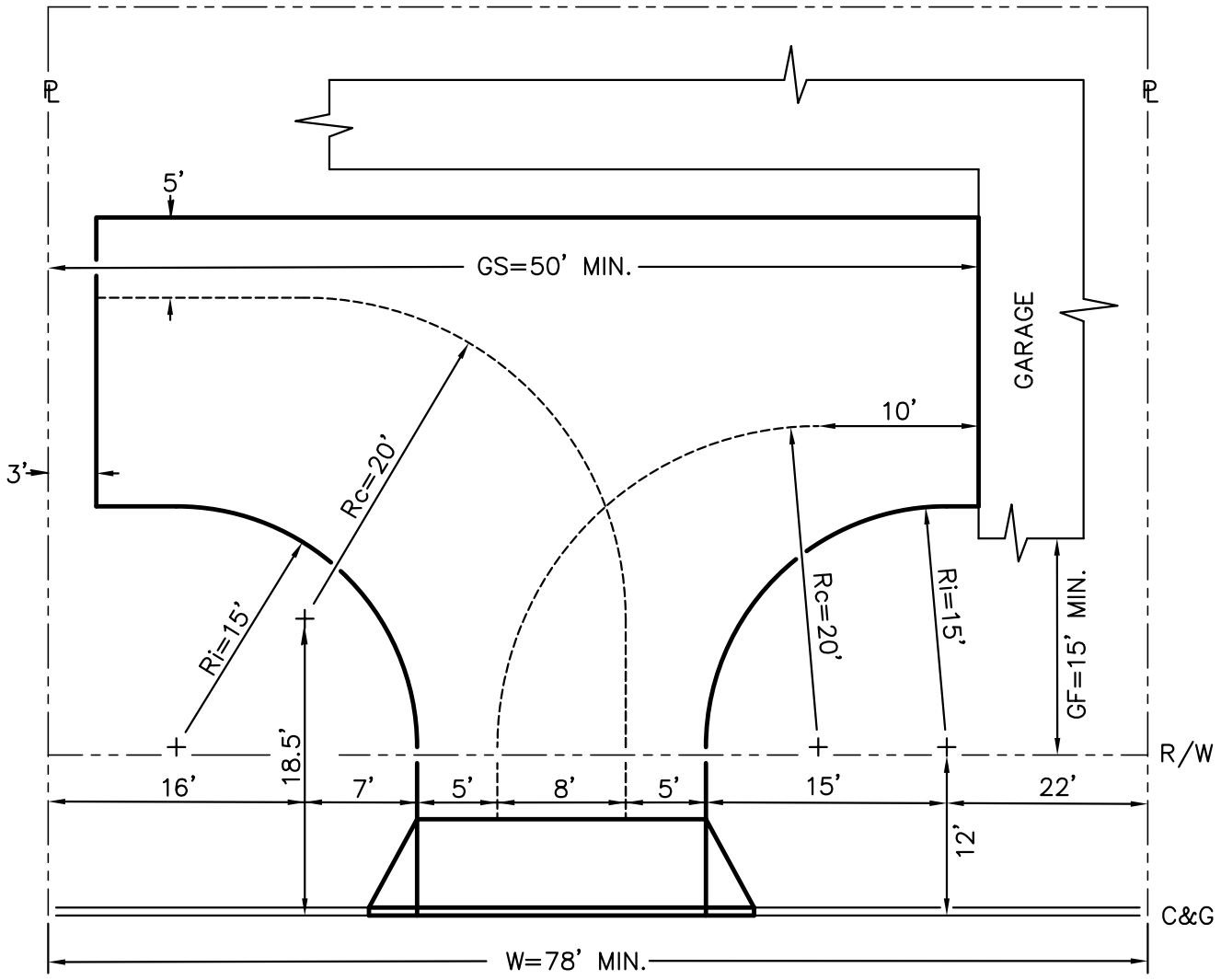


**GARAGE FACING SIDE**
**HAMMERHEAD TO LOT EXTERIOR**

## PLAN

N.T.S.

| W | GF | GS | Rc | Ri |
|---|---|---|---|---|
| 78' | 15' | 50' | 20' | 15' |

## TABLE

## ABBREVIATIONS

W = LOT WIDTH (AT PROPERTY LINE).
GF = FRONT YARD SETBACK TO GARAGE WALL AND HOUSE FROM PROPERTY LINE.
GS = SIDE YARD SETBACK TO GARAGE WALL FROM PROPERTY LINE NEAREST HAMMERHEAD.
Rc = CENTER TURNING RADIUS OF DRIVEWAY. MINIMUM 20 FEET.
Ri = INSIDE TURNING RADIUS OF DRIVEWAY.

| CITY OF VICTORVILLE - ENGINEERING DEPARTMENT | | | | |
|---|---|---|---|---|
| REV. | DATE | BY | **HAMMERHEAD DRIVEWAY TYPE 4** | **GS-05** |
| | 1/5/06 | B.W.G. | | |
| 1 | 6/1/07 | STAFF | JOHN A. McGLADE, CITY ENGINEER | SHEET 1 OF 2 |

## NOTES:

1. ALL DIMENSIONS ARE MINIMUMS.
2. DIMENSIONS MAY NEED TO BE INCREASED TO ALLOW FOR SLOPES ON THE SIDE YARD OR FRONT YARD, MAXIMUM GRADE OF THE DRIVEWAY, LOT DRAINAGE, PLACEMENT OF FIRE HYDRANTS AND/OR STREETLIGHTS OR OTHER CONDITIONS.
3. ASSUMED WIDTH OF DRIVEWAY AND DRIVEWAY APPROACH FOR A TWO-CAR GARAGE IS 18 FEET. DRIVEWAY WIDTHS AND DIMENSIONS FROM EDGE OF DRIVEWAY TO OUTSIDE SURFACE OF GARAGE WALL WILL VARY.
4. MINIMUM YARD SETBACKS ARE SUBJECT TO CITY REQUIREMENTS INCLUDING THE MUNICIPAL CODE, THE GENERAL PLAN OR THE SPECIFIC PLAN (IF APPLICABLE).
5. FRONT YARD SETBACK TO GARAGE WALL AND HOUSE FROM PROPERTY LINE (GF) AND SIDE YARD SETBACK TO GARAGE WALL FROM PROPERTY LINE NEAREST HAMMERHEAD (GS) AND THE SETBACKS TO THE GARAGE ARE NOT NECESSARILY THE SAME AS THE MINIMUM FRONT YARD AND SIDE YARD SETBACKS REQUIRED.
6. THE FOOTPRINT OF THE HOUSE SHOWN IN THIS STANDARD IS AN EXAMPLE ONLY. FOOTPRINTS WILL VARY BUT MUST MEET SETBACK REQUIREMENTS.
7. THE HAMMERHEAD LAYOUT NEEDS TO BE DESIGNED FOR A SPECIFIC LOT AND INCORPORATED INTO THE PRECISE GRADING PLAN FOR THE LOT.
8. RETAINING WALLS, CURBS AND DRAINAGE SWALES MAY BE REQUIRED TO ACCOMODATE THE DRIVEWAY IMPROVEMENTS ON A LOT. THE PRECISE GRADING PLAN FOR THE LOT MUST SHOW IMPROVEMENTS NECESSARY TO CONSTRUCT THE DRIVEWAY.
9. DRIVEWAY APPROACH SHALL COMPLY WITH CITY OF VICTORVILLE STANDARD DRAWING NO. S-02 WHERE CURB AND GUTTER EXISTS.
10. MAXIMUM DRIVEWAY LONGITUDINAL SLOPE (90 DEGREES TO STREET) IS 12%.
11. MAXIMUM DRIVEWAY CROSS SLOPE (PARALLEL TO STREET) IS 6%.
12. MAXIMUM CHANGE OF SLOPE IN DRIVEWAY GRADE BREAK IS 12%.
13. FOR CONSTRUCTION OF HAMMERHEAD DRIVEWAYS AT EXISTING RESIDENCES, THE CITY ENGINEER MAY GRANT EXCEPTIONS TO THE STANDARDS.

| CITY OF VICTORVILLE - ENGINEERING DEPARTMENT | | | | |
|---|---|---|---|---|
| REV. | DATE | BY | **HAMMERHEAD DRIVEWAY TYPE 4** | **GS-05** |
| | 1/5/06 | B.W.G. | | |
| 1 | 6/1/07 | STAFF | JOHN A. McGLADE, CITY ENGINEER | SHEET 2 OF 2 |

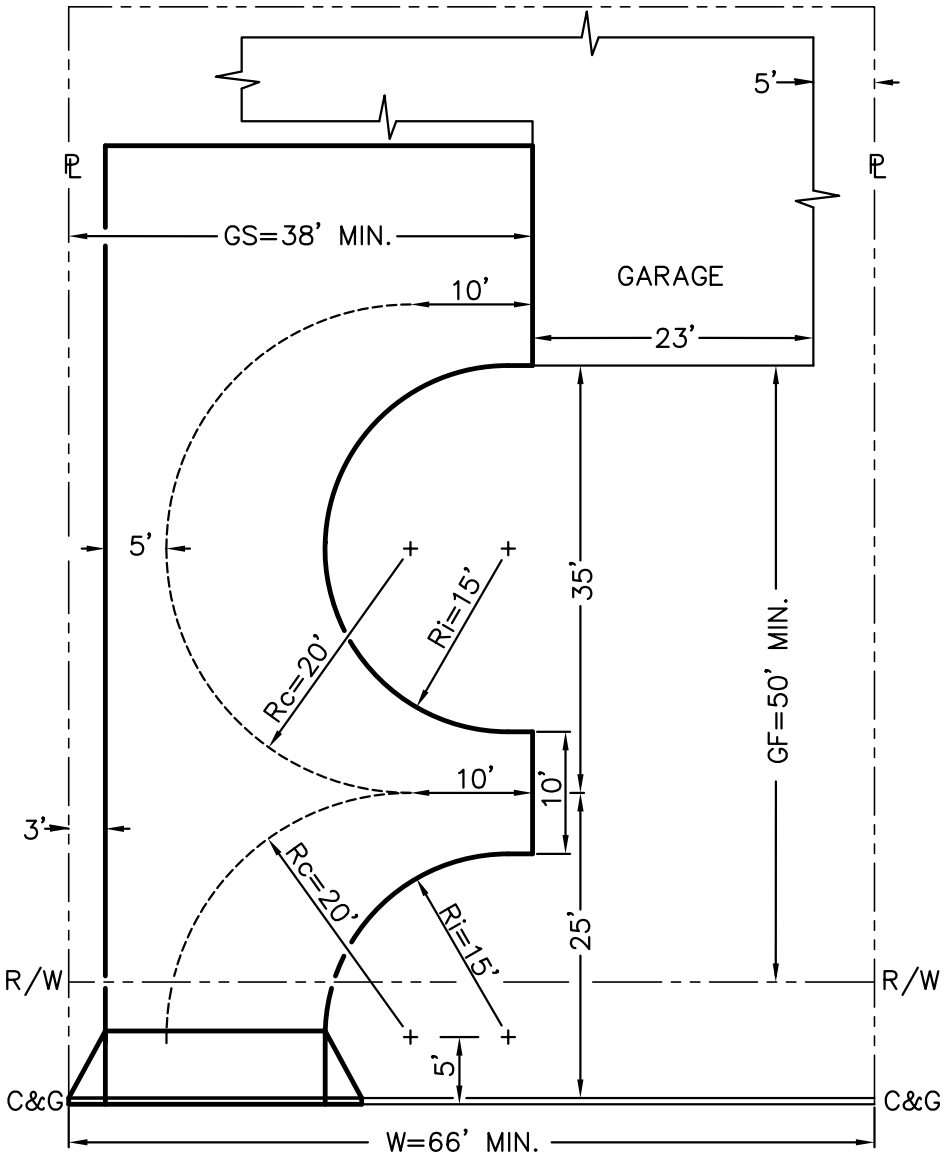


**GARAGE FACING SIDE**
**HAMMERHEAD TO LOT INTERIOR**

# PLAN

N.T.S.

| W | GF | GS | Rc | Ri |
|---|---|---|---|---|
| 66' | 50' | 38' | 20' | 15' |

# TABLE

## ABBREVIATIONS

W = LOT WIDTH (AT PROPERTY LINE).
GF = FRONT YARD SETBACK TO GARAGE WALL AND HOUSE FROM PROPERTY LINE.
GS = SIDE YARD SETBACK TO GARAGE WALL FROM PROPERTY LINE NEAREST HAMMERHEAD.
Rc = CENTER TURNING RADIUS OF DRIVEWAY. MINIMUM 20 FEET.
Ri = INSIDE TURNING RADIUS OF DRIVEWAY.

| CITY OF VICTORVILLE - ENGINEERING DEPARTMENT | | | | |
|---|---|---|---|---|
| REV. | DATE | BY | **HAMMERHEAD DRIVEWAY TYPE 5** | **GS-06** |
| | 1/5/06 | B.W.G. | | |
| 1 | 6/1/07 | STAFF | JOHN A. McGLADE, CITY ENGINEER | SHEET 1 OF 2 |

## NOTES:

1. ALL DIMENSIONS ARE MINIMUMS.
2. DIMENSIONS MAY NEED TO BE INCREASED TO ALLOW FOR SLOPES ON THE SIDE YARD OR FRONT YARD, MAXIMUM GRADE OF THE DRIVEWAY, LOT DRAINAGE, PLACEMENT OF FIRE HYDRANTS AND/OR STREETLIGHTS OR OTHER CONDITIONS.
3. ASSUMED WIDTH OF DRIVEWAY AND DRIVEWAY APPROACH FOR A TWO-CAR GARAGE IS 18 FEET. DRIVEWAY WIDTHS AND DIMENSIONS FROM EDGE OF DRIVEWAY TO OUTSIDE SURFACE OF GARAGE WALL WILL VARY.
4. MINIMUM YARD SETBACKS ARE SUBJECT TO CITY REQUIREMENTS INCLUDING THE MUNICIPAL CODE, THE GENERAL PLAN OR THE SPECIFIC PLAN (IF APPLICABLE).
5. FRONT YARD SETBACK TO GARAGE WALL AND HOUSE FROM PROPERTY LINE (GF) AND SIDE YARD SETBACK TO GARAGE WALL FROM PROPERTY LINE NEAREST HAMMERHEAD (GS) AND THE SETBACKS TO THE GARAGE ARE NOT NECESSARILY THE SAME AS THE MINIMUM FRONT YARD AND SIDE YARD SETBACKS REQUIRED.
6. THE FOOTPRINT OF THE HOUSE SHOWN IN THIS STANDARD IS AN EXAMPLE ONLY. FOOTPRINTS WILL VARY BUT MUST MEET SETBACK REQUIREMENTS.
7. THE HAMMERHEAD LAYOUT NEEDS TO BE DESIGNED FOR A SPECIFIC LOT AND INCORPORATED INTO THE PRECISE GRADING PLAN FOR THE LOT.
8. RETAINING WALLS, CURBS AND DRAINAGE SWALES MAY BE REQUIRED TO ACCOMODATE THE DRIVEWAY IMPROVEMENTS ON A LOT. THE PRECISE GRADING PLAN FOR THE LOT MUST SHOW IMPROVEMENTS NECESSARY TO CONSTRUCT THE DRIVEWAY.
9. DRIVEWAY APPROACH SHALL COMPLY WITH CITY OF VICTORVILLE STANDARD DRAWING NO. S-02 WHERE CURB AND GUTTER EXISTS.
10. MAXIMUM DRIVEWAY LONGITUDINAL SLOPE (90 DEGREES TO STREET) IS 12%.
11. MAXIMUM DRIVEWAY CROSS SLOPE (PARALLEL TO STREET) IS 6%.
12. MAXIMUM CHANGE OF SLOPE IN DRIVEWAY GRADE BREAK IS 12%.
13. FOR CONSTRUCTION OF HAMMERHEAD DRIVEWAYS AT EXISTING RESIDENCES, THE CITY ENGINEER MAY GRANT EXCEPTIONS TO THE STANDARDS.

| CITY OF VICTORVILLE - ENGINEERING DEPARTMENT | | | | |
|---|---|---|---|---|
| REV. | DATE | BY | HAMMERHEAD DRIVEWAY TYPE 5 | GS-06 |
| | 1/5/06 | B.W.G. | | |
| 1 | 6/1/07 | STAFF | JOHN A. McGLADE, CITY ENGINEER | SHEET 2 OF 2 |

CITY OF VICTORVILLE
INCORPORATED SEPT. 21, 1962
HOME OF THE SAN BERNARDINO COUNTY FAIR
CALIFORNIA

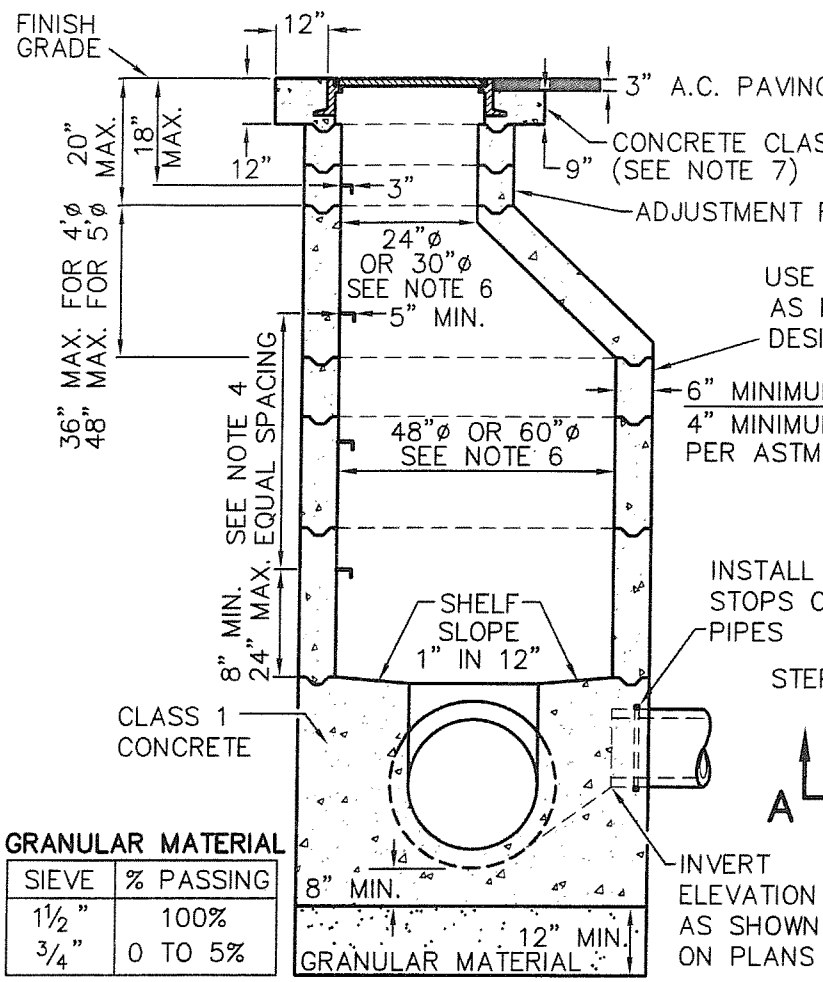


**GRANULAR MATERIAL**

| SIEVE | % PASSING |
|---|---|
| 1½" | 100% |
| ¾" | 0 TO 5% |

GRANULAR MATERIAL ALL MANHOLES IF INVERT IS WITHIN 8" OF GROUNDWATER

## SECTION A–A
NOT TO SCALE

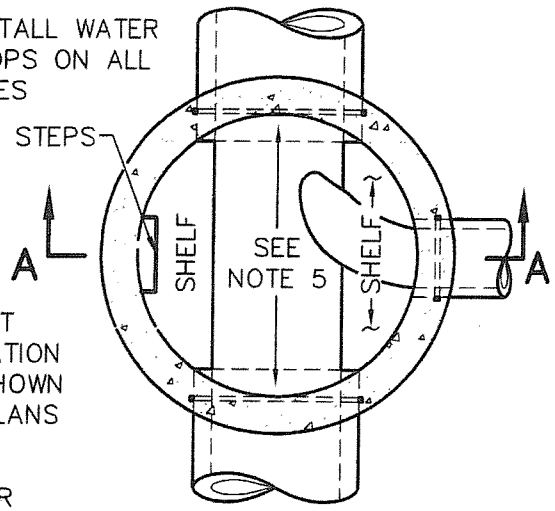


## PLAN
NOT TO SCALE

**NOTES:**

1. ALL SECTIONS TO BE SET IN 1:3 MORTAR TRIMMED SMOOTH INSIDE.
2. CONCRETE FOR MANHOLE SECTIONS SHALL BE 3000 P.S.I. MINIMUM.
3. PROVIDE FLEXIBLE JOINT IN ALL SEWER PIPE OUTSIDE OF MANHOLE BUT WITHIN 12" OF CONCRETE BASE FOR VCP ONLY.
4. MANHOLE STEPS SHALL BE ALHAMBRA FOUNDRY A3320 OR EQUAL. INSTALL AT 12" MINIMUM TO 16" MAXIMUM EQUAL SPACINGS WITH TREAD WIDTH OF 14" MINIMUM.
5. FOR ALL PIPE SIZES THE TOP HALF OF THE PIPE SHALL BE REMOVED TO THE CONTOUR OF THE INSIDE OF THE MANHOLE AND THE BROKEN EDGES SHALL BE TROWELED SMOOTH WITH CEMENT MORTAR PROVIDING A MONOLITHIC BASE.
6. 60" SHAFT DIA. AND 30" DIA. CLEAR OPENING SHALL BE USED FOR MANHOLES WITH A) 18" DIA. OR LARGER, OR B) WHERE 2 OR MORE INLETS EXIST.
7. IN AREAS WHERE MANHOLE IS IN A DIRT EASEMENT, A MINIMUM 12" WIDE BY 12" DEEP PAD OR PRE-CAST FRAME AND LID WILL BE REQUIRED AROUND MANHOLE LID AND FRAME.

| APPROVED BY CITY ENGINEER | | CITY OF VICTORVILLE - ENGINEERING DEPARTMENT | |
|---|---|---|---|
| | | SANITARY SEWER MANHOLE | SS-01 |
| DATE | INITIALS | | |
| 05/05/09 | JAM | JOHN A. MCGLADE, CITY ENGINEER | SHEET 1 OF 1 |

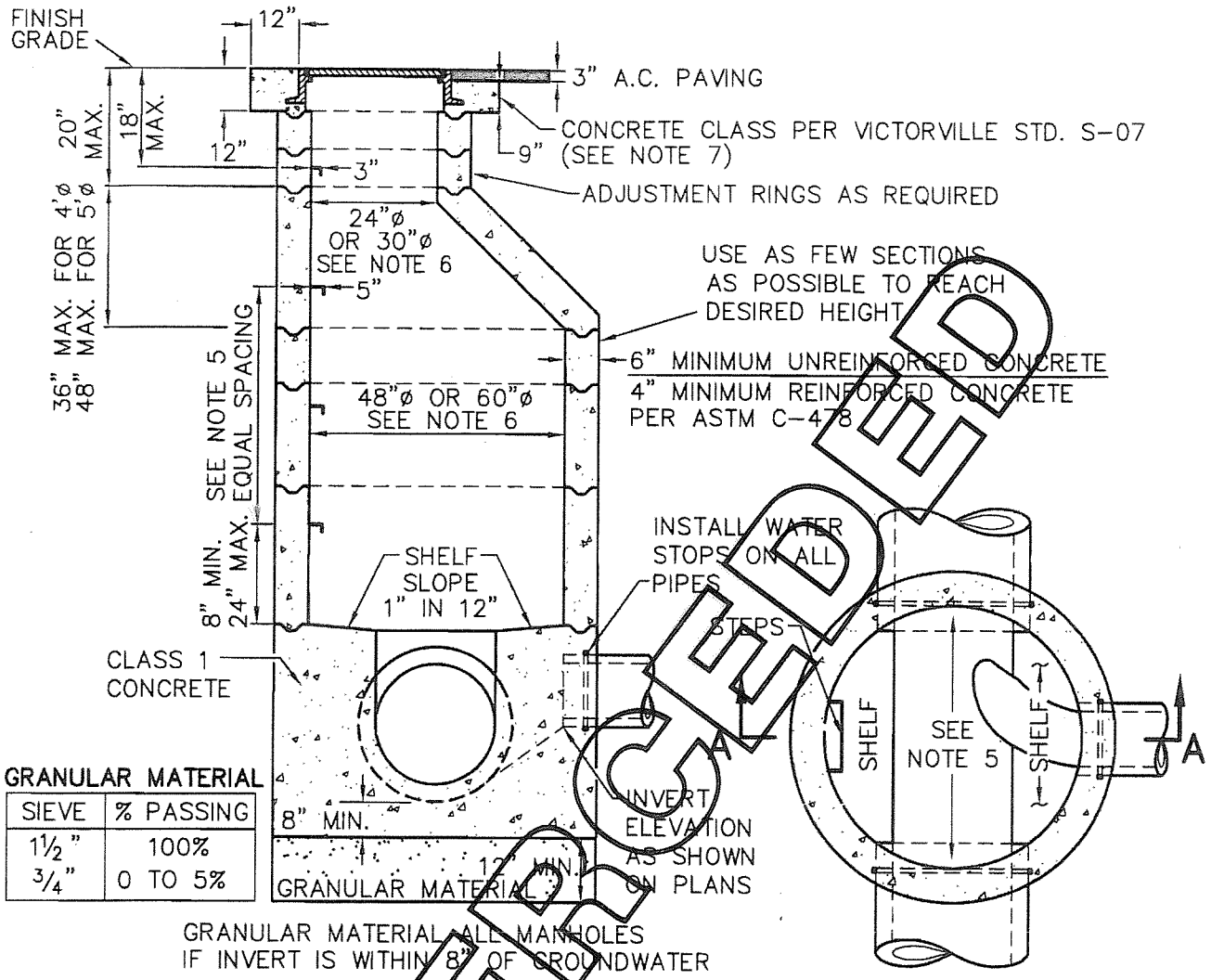


**GRANULAR MATERIAL**

| SIEVE | % PASSING |
|---|---|
| 1½" | 100% |
| ¾" | 0 TO 5% |

SECTION A-A
NOT TO SCALE

PLAN
NOT TO SCALE

SUPERSEDED

## NOTES:

1. ALL SECTIONS TO BE SET IN 1:3 MORTAR TRIMMED SMOOTH INSIDE.
2. CONCRETE FOR MANHOLE SECTIONS SHALL BE 3000 P.S.I. MINIMUM.
3. PROVIDE FLEXIBLE JOINT IN ALL SEWER PIPE OUTSIDE OF MANHOLE BUT WITHIN 12" OF CONCRETE BASE.
4. MANHOLE STEPS SHALL BE ALHAMBRA FOUNDRY A3320 OR EQUAL. INSTALL AT 12" MINIMUM TO 16" MAXIMUM EQUAL SPACINGS.
5. FOR ALL PIPE SIZES THE TOP HALF OF THE PIPE SHALL BE REMOVED TO THE CONTOUR OF THE INSIDE OF THE MANHOLE AND THE BROKEN EDGES SHALL BE TROWELED SMOOTH WITH CEMENT MORTAR PROVIDING A MONOLITHIC BASE.
6. 60" SHAFT DIA. AND 30" DIA. CLEAR OPENING SHALL BE USED FOR MANHOLES WITH A) 18" DIA. OR LARGER, OR B) WHERE 2 OR MORE INLETS EXIST.
7. IN AREAS WHERE MANHOLE IS IN A DIRT EASEMENT, A MINIMUM 12" WIDE BY 12" DEEP PAD OR PRE-CAST FRAME AND LID WILL BE REQUIRED AROUND MANHOLE LID AND FRAME.

| APPROVED BY CITY ENGINEER | | CITY OF VICTORVILLE - ENGINEERING DEPARTMENT | |
|---|---|---|---|
| | | SANITARY SEWER MANHOLE | SS-01 |
| DATE | INITIALS | | |
| 12/1/08 | J. Wells | JOHN A. MCGLADE, CITY ENGINEER | SHEET 1 OF 1 |

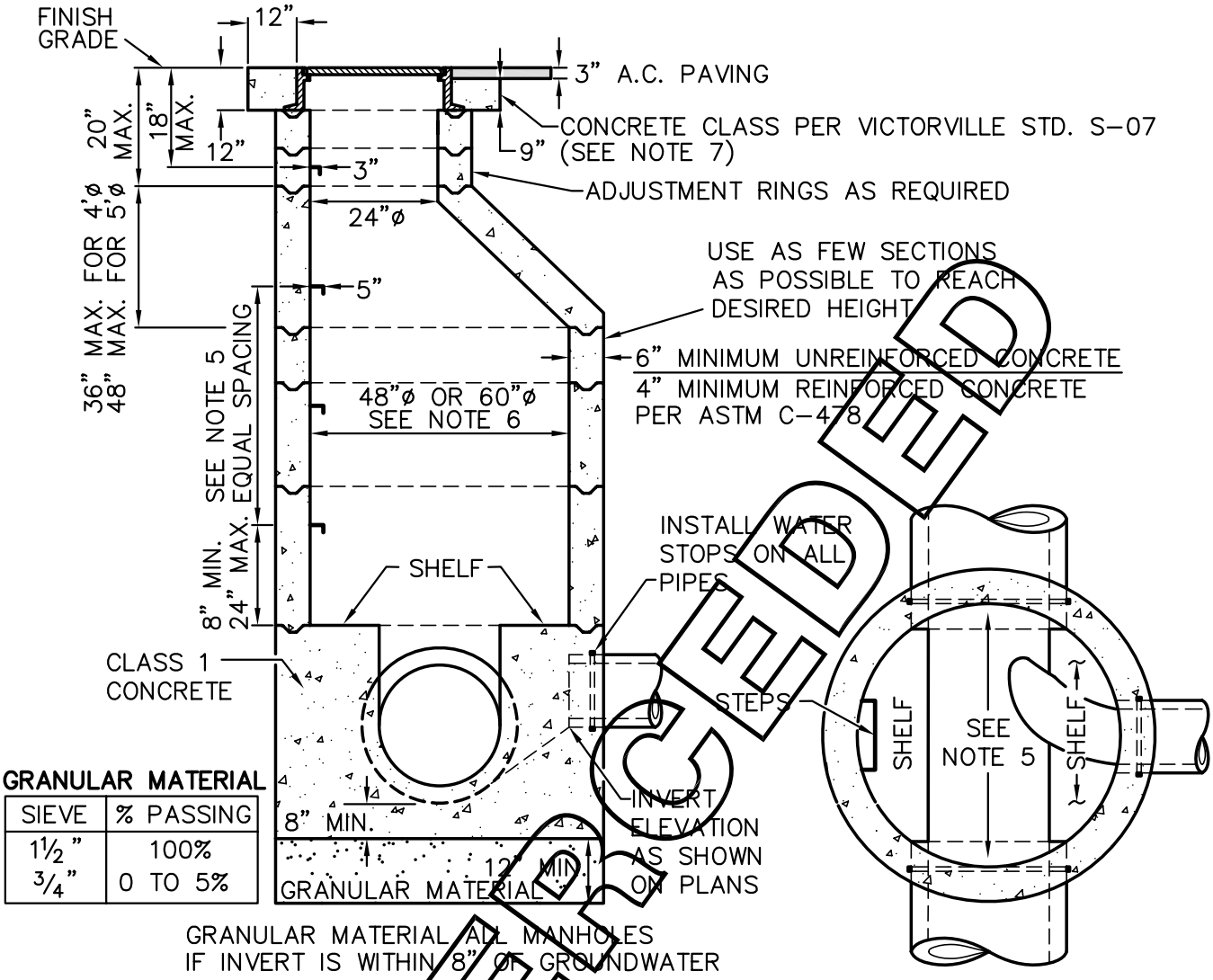


**GRANULAR MATERIAL**

| SIEVE | % PASSING |
|---|---|
| 1½" | 100% |
| ¾" | 0 TO 5% |

SUPERSEDED

## NOTES:

1. ALL SECTIONS TO BE SET IN 1:3 MORTAR TRIMMED SMOOTH INSIDE.
2. CONCRETE FOR MANHOLE SECTIONS SHALL BE 3000 P.S.I. MINIMUM.
3. PROVIDE FLEXIBLE JOINT IN ALL SEWER PIPE OUTSIDE OF MANHOLE BUT WITHIN 12" OF CONCRETE BASE.
4. MANHOLE STEPS SHALL BE ALHAMBRA FOUNDRY A3320 OR EQUAL. INSTALL AT 12" MINIMUM TO 16" MAXIMUM EQUAL SPACINGS.
5. FOR ALL PIPE SIZES THE TOP HALF OF THE PIPE SHALL BE REMOVED TO THE CONTOUR OF THE INSIDE OF THE MANHOLE AND THE BROKEN EDGES SHALL BE TROWELED SMOOTH WITH CEMENT MORTAR PROVIDING A MONOLITHIC BASE.
6. 60" SHAFT DIAMETER SHALL BE USED FOR MANHOLES WITH A) 18"ø OR LARGER OR B) WHERE 2 OR MORE INLETS EXIST.
7. IN AREAS WHERE MANHOLE IS IN A DIRT EASEMENT, A MINIMUM 12" WIDE BY 12" DEEP PAD OR PRE-CAST FRAME AND LID WILL BE REQUIRED AROUND MANHOLE LID AND FRAME.

| REV. | DATE | BY | | |
|---|---|---|---|---|
| | | | **CITY OF VICTORVILLE - ENGINEERING DEPARTMENT** | |
| | 11/5/75 | T.D.W. | **SANITARY SEWER MANHOLE** | **SS-01** |
| 1 | 3/12/93 | D.G.H. | | |
| 2 | 7/25/07 | STAFF | JOHN A. MCGLADE, CITY ENGINEER | SHEET 1 OF 1 |

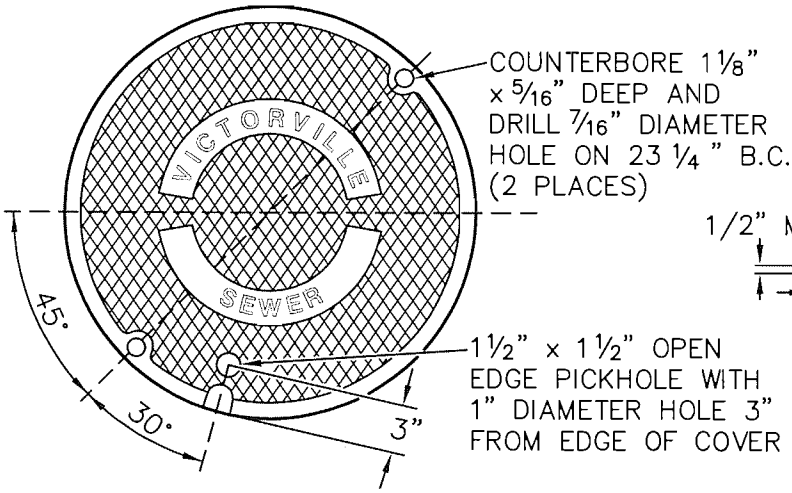


PLATEN COVER TOP VIEW

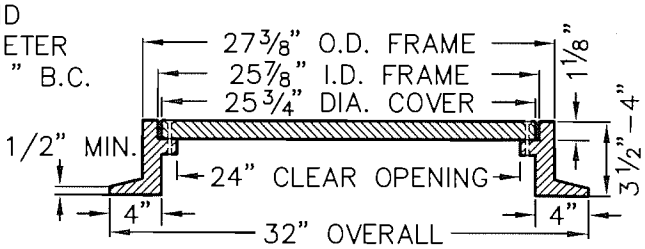


SECTION A–A

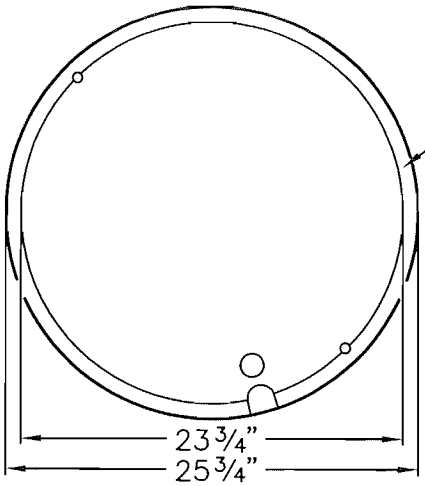


PLATEN COVER BOTTOM VIEW

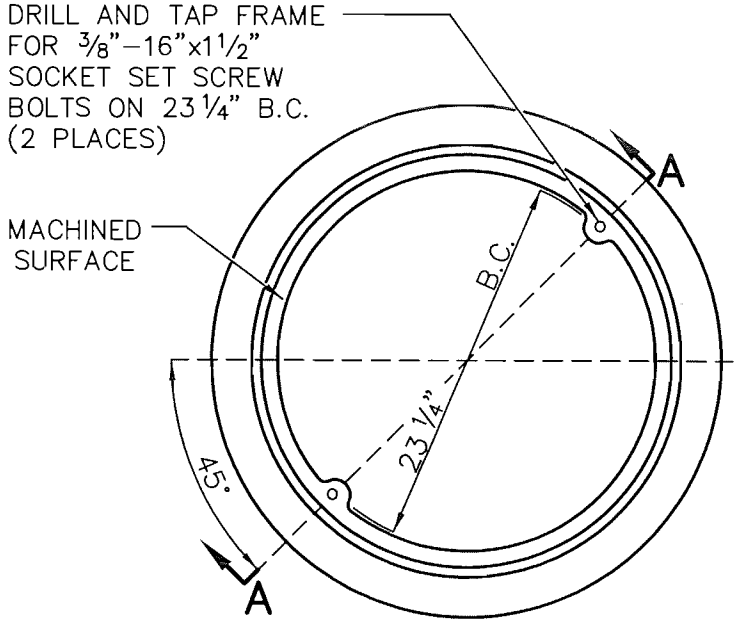


PLAN OF FRAME

NOTES:

1. MANHOLE FRAME AND COVER TO BE MANUFACTURED FROM CLASS 35 CAST IRON PER ASTM A–48.
2. FRAME AND COVER SHALL BE CAPABLE OF SUPPORTING H–20 WHEEL LOADING.
3. COVER SHALL HAVE CAST INTO TOP IN 1" HIGH MINIMUM BLOCK LETTERS "VICTORVILLE" OR "CITY OF VICTORVILLE" AND "SEWER". MANUFACTURER'S NAME OR INSIGNIA SHALL BE CAST INTO BOTH FRAME AND COVER.
4. MACHINE MATING SURFACES OF FRAME AND COVER TO PROVIDE UNIFORM EDGE SUPPORT FOR COVER.
5. PAINT FRAME AND COVER WITH BLACK BITUMINOUS PAINT.
6. APPROVED SUPPLIERS: ALHAMBRA FOUNDRY #1254, NEENAH FOUNDRY #R–1593 AND SOUTH BAY FOUNDRY #SBF1253B.

| APPROVED BY CITY ENGINEER | | CITY OF VICTORVILLE - ENGINEERING DEPARTMENT | |
|---|---|---|---|
| DATE | INITIALS | SANITARY SEWER 24" MANHOLE FRAME AND COVER | SS-02 |
| 12/1/08 | J. McGlade | JOHN A. McGLADE, CITY ENGINEER | SHEET 1 OF 1 |

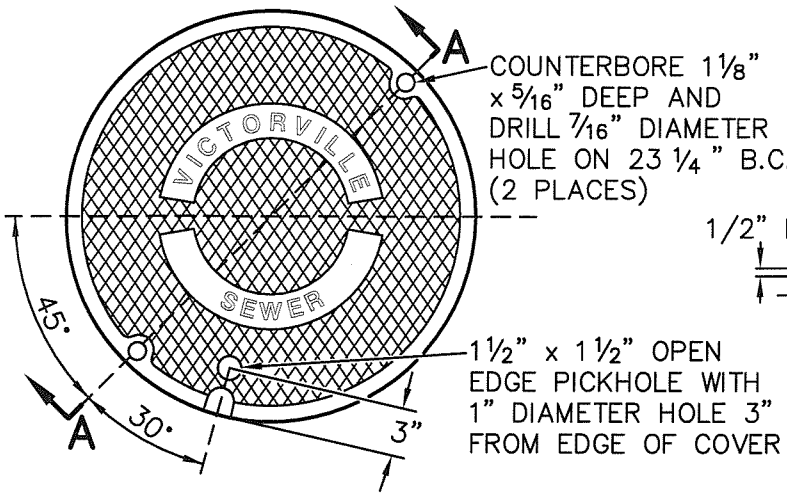


PLATEN COVER TOP VIEW

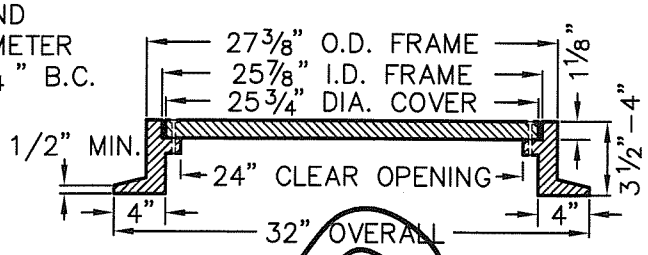


SECTION A-A

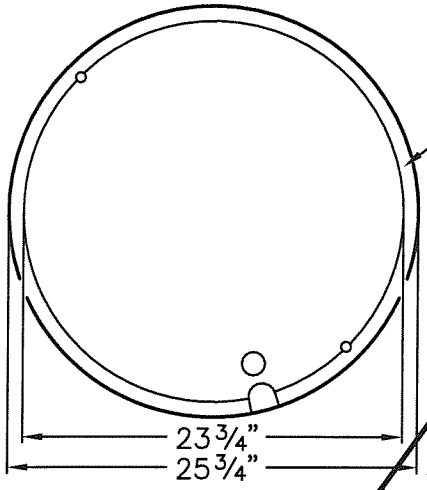


PLATEN COVER BOTTOM VIEW

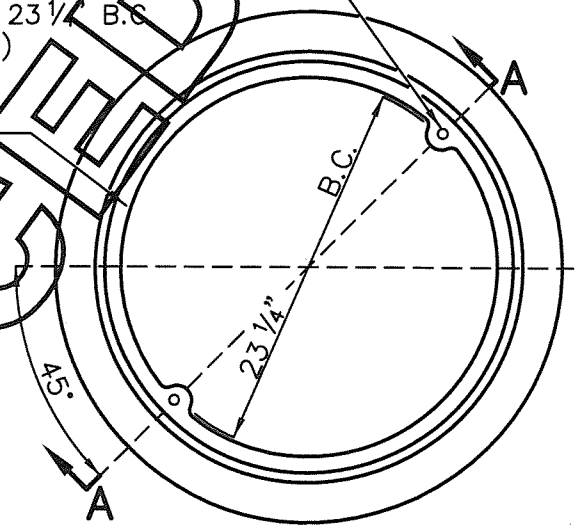


PLAN OF FRAME

SUPERCEDED

## NOTES:

1. MANHOLE FRAME AND COVER TO BE MANUFACTURED FROM CLASS 35 CAST IRON PER ASTM A-48.
2. FRAME AND COVER SHALL BE CAPABLE OF SUPPORTING H-20 WHEEL LOADING.
3. COVER SHALL HAVE CAST INTO TOP IN 1" HIGH MINIMUM BLOCK LETTERS "VICTORVILLE" OR "CITY OF VICTORVILLE" AND "SEWER". MANUFACTURER'S NAME OR INSIGNIA SHALL BE CAST INTO BOTH FRAME AND COVER.
4. MACHINE MATING SURFACES OF FRAME AND COVER TO PROVIDE UNIFORM EDGE SUPPORT FOR COVER.
5. PAINT FRAME AND COVER WITH BLACK BITUMINOUS PAINT.
6. APPROVED SUPPLIERS: ALHAMBRA FOUNDRY #1254, NEENAH FOUNDRY #R-1593 AND SOUTH BAY FOUNDRY #SBF1253B.

| CITY OF VICTORVILLE - ENGINEERING DEPARTMENT | | | | |
|---|---|---|---|---|
| REV. | DATE | BY | SANITARY SEWER MANHOLE FRAME AND COVER | SS-02 |
| | 5/18/93 | D.G.H. | | |
| 1 | 6/1/07 | STAFF | JOHN A. McGLADE, CITY ENGINEER | SHEET 1 OF 1 |

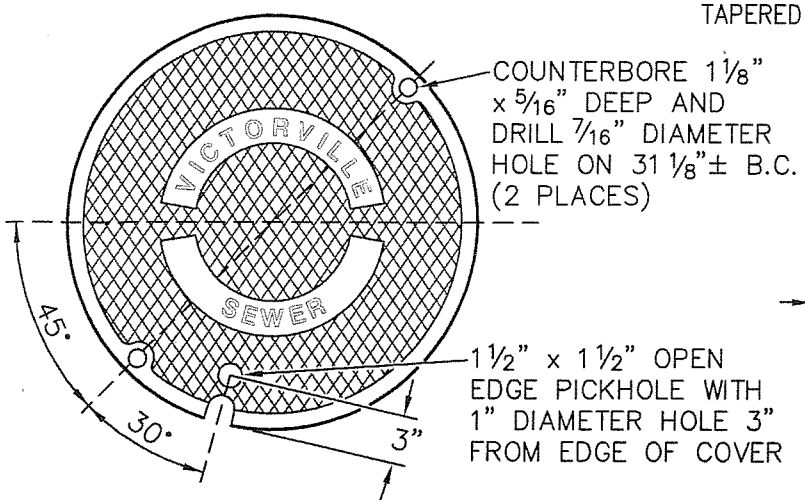


PLATEN COVER
TOP VIEW

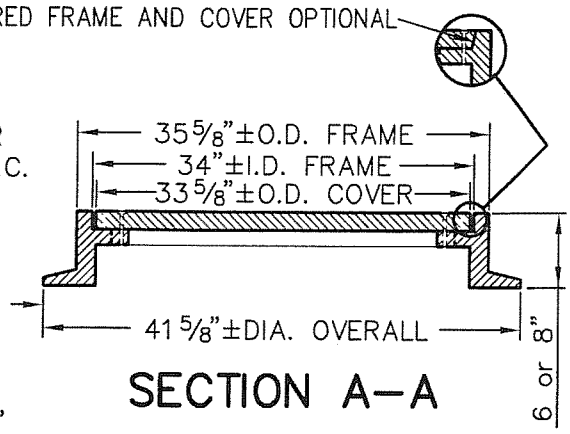


SECTION A–A

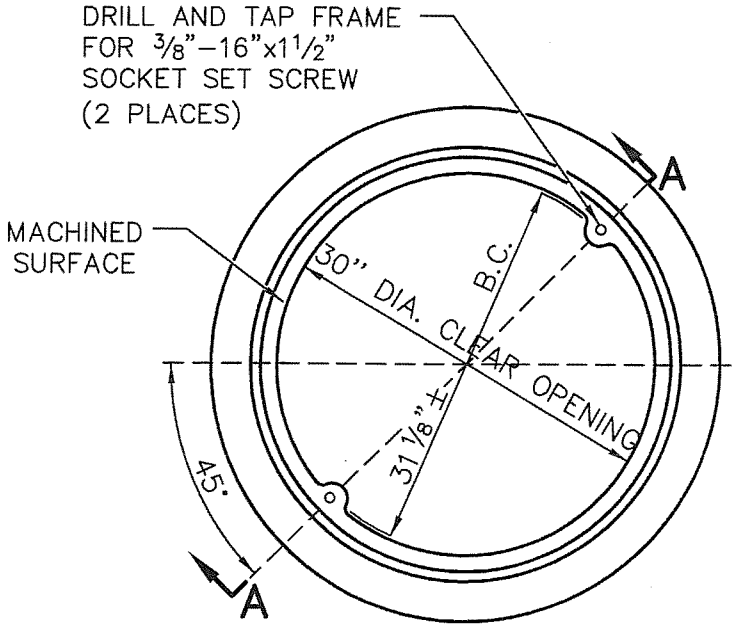


PLAN OF FRAME

## NOTES:

1. MANHOLE FRAME AND COVER TO BE MANUFACTURED FROM CLASS 35 CAST IRON PER ASTM A–48.
2. FRAME AND COVER SHALL BE CAPABLE OF SUPPORTING H–20 WHEEL LOADING.
3. COVER SHALL HAVE CAST INTO TOP IN 1" HIGH MINIMUM BLOCK LETTERS "VICTORVILLE" OR "CITY OF VICTORVILLE" AND "SEWER". MANUFACTURER'S NAME OR INSIGNIA SHALL BE CAST INTO BOTH FRAME AND COVER.
4. MACHINE MATING SURFACES OF FRAME AND COVER TO PROVIDE UNIFORM EDGE SUPPORT FOR COVER.
5. PAINT FRAME AND COVER WITH BLACK BITUMINOUS PAINT.
6. APPROVED SUPPLIERS: ALHAMBRA FOUNDRY, NEENAH FOUNDRY AND SOUTH BAY FOUNDRY.

| APPROVED BY CITY ENGINEER | | | |
|---|---|---|---|
| DATE | INITIALS | **SANITARY SEWER 30" MANHOLE FRAME AND COVER** | **SS-02A** |
| 04/30/09 | JAMcG | JOHN A. McGLADE, CITY ENGINEER | SHEET 1 OF 1 |

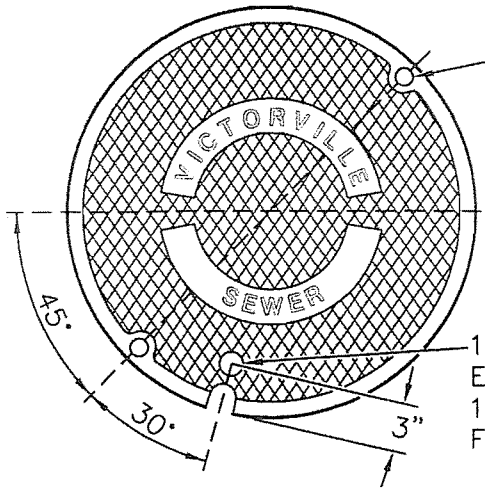


COUNTERBORE 1 1/8" x 5/16" DEEP AND DRILL 7/16" DIAMETER HOLE ON 31 1/8" B.C. (2 PLACES)

1 1/2" x 1 1/2" OPEN EDGE PICKHOLE WITH 1" DIAMETER HOLE 3" FROM EDGE OF COVER

PLATEN COVER TOP VIEW

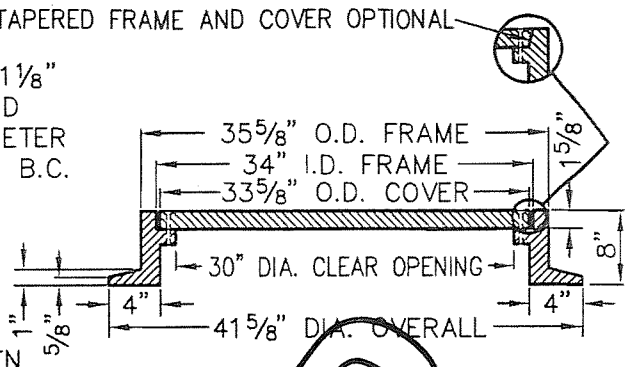


SECTION A-A

DRILL AND TAP FRAME FOR 3/8"-16"x1 1/2" SOCKET SET SCREW BOLTS ON 31 1/8" B.C. (2 PLACES)

MACHINED SURFACE

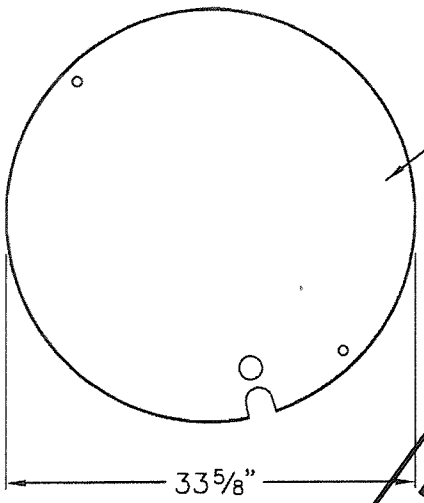


PLATEN COVER BOTTOM VIEW

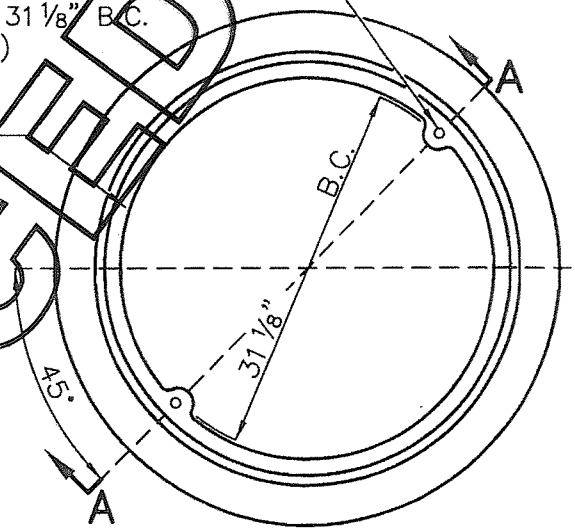


PLAN OF FRAME

SUPERCEDED

NOTES:

1. MANHOLE FRAME AND COVER TO BE MANUFACTURED FROM CLASS 35 CAST IRON PER ASTM A-48.
2. FRAME AND COVER SHALL BE CAPABLE OF SUPPORTING H-20 WHEEL LOADING.
3. COVER SHALL HAVE CAST INTO TOP IN 1" HIGH MINIMUM BLOCK LETTERS "VICTORVILLE" OR "CITY OF VICTORVILLE" AND "SEWER". MANUFACTURER'S NAME OR INSIGNIA SHALL BE CAST INTO BOTH FRAME AND COVER.
4. MACHINE MATING SURFACES OF FRAME AND COVER TO PROVIDE UNIFORM EDGE SUPPORT FOR COVER.
5. PAINT FRAME AND COVER WITH BLACK BITUMINOUS PAINT.
6. APPROVED SUPPLIERS: ALHAMBRA FOUNDRY #1254, NEENAH FOUNDRY #R-1593 AND SOUTH BAY FOUNDRY #SBF1253B.

| APPROVED BY | | | |
|---|---|---|---|
| CITY ENGINEER | | SANITARY SEWER 30" MANHOLE FRAME AND COVER | SS-02A |
| DATE | INITIALS | | |
| 12/1/08 | J McGlade | JOHN A. McGLADE, CITY ENGINEER | SHEET 1 OF 1 |

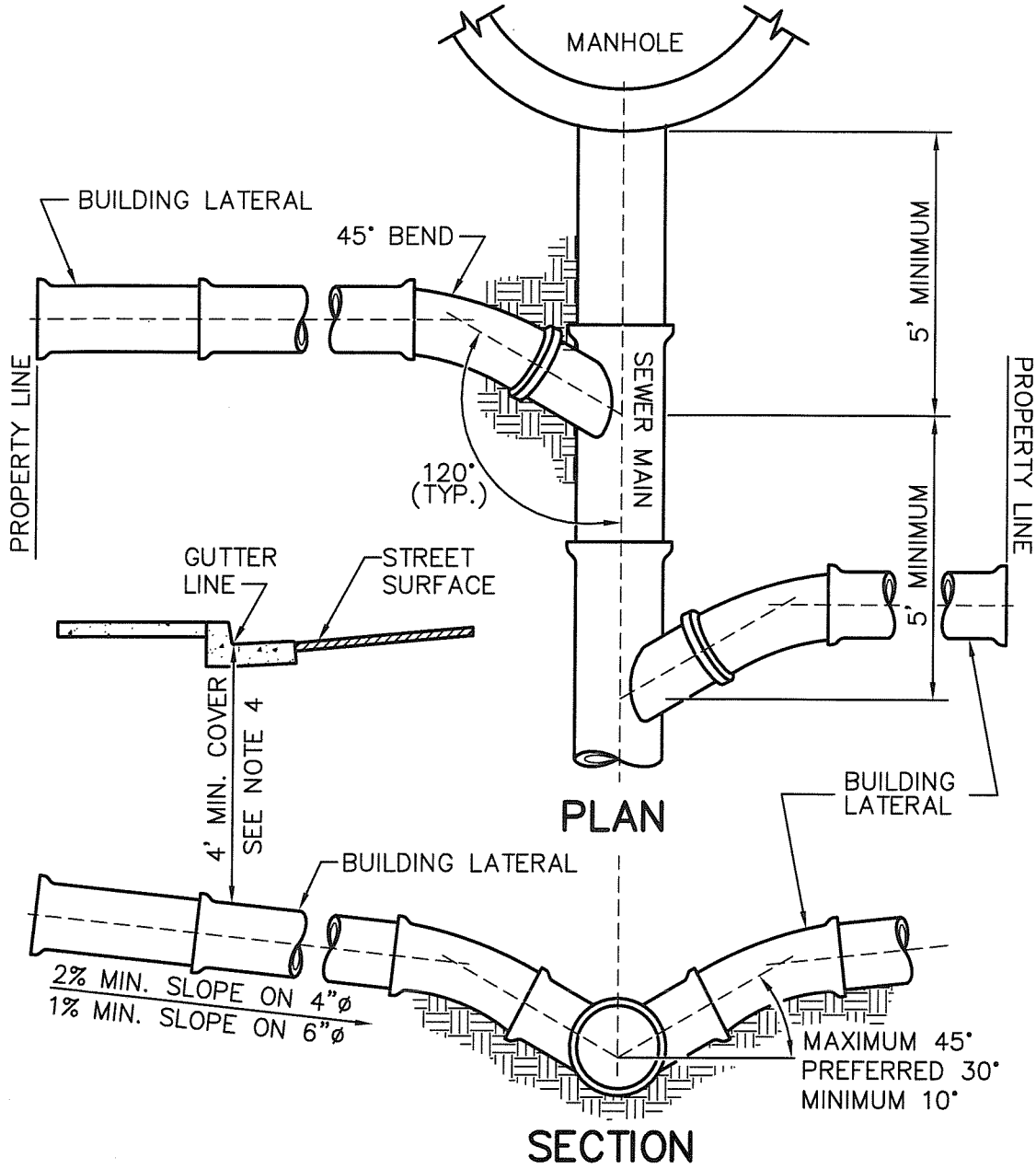


## NOTES:

1. USE FACTORY MADE WYES, FITTINGS AND SEWER LATERAL PIPE OF THE SAME MATERIAL AS THE MAIN LINE SEWER FOR NEW INSTALLATIONS OR USE COMPATIBLE WYES AND FITTINGS TO JOIN LATERALS AND MAIN LINE SEWERS OF DIFFERENT MATERIALS.
2. SEWER LATERALS ON EXISTING MAIN LINE SEWER SHALL USE SEWER SADDLES PER CITY STANDARD DRAWING SS-09.
3. PIPE BEDDING FOR LATERALS SHALL CONFORM TO STANDARD DRAWING SS-05.
4. COVER MAY BE REDUCED TO 3' IF CONCRETE ENCASED OR SPECIAL PIPE APPROVED BY THE ENGINEER IS USED.

| REV. | DATE | BY | | |
|---|---|---|---|---|
| CITY OF VICTORVILLE - ENGINEERING DEPARTMENT | | | | |
| | 1/23/67 | | **SEWER LATERALS** | **SS-03** |
| 1 | 3/22/93 | D.G.H. | | |
| 2 | 6/1/07 | STAFF | JOHN A. MCGLADE, CITY ENGINEER | SHEET 1 OF 1 |

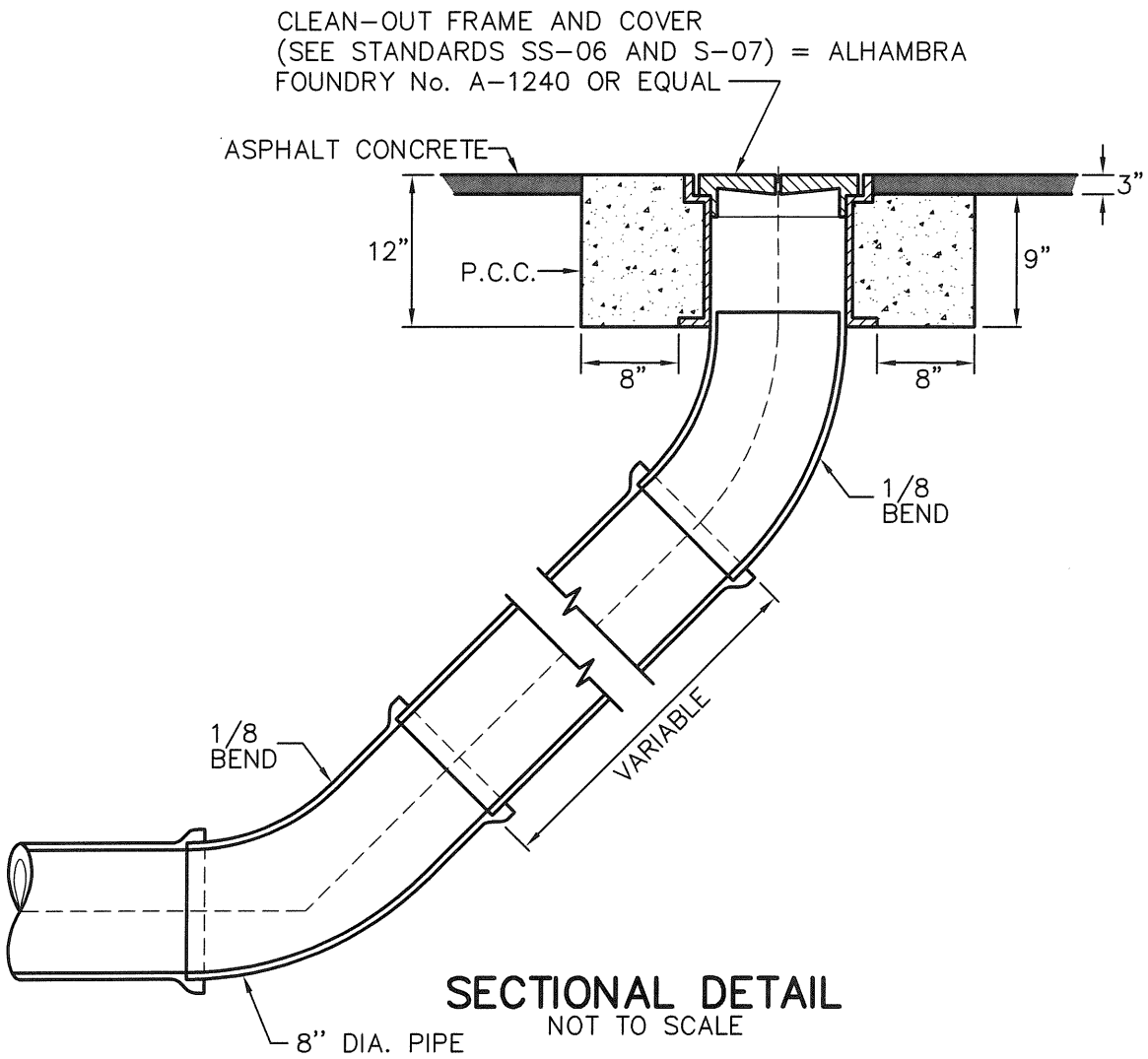


## SECTIONAL DETAIL

NOT TO SCALE

## NOTES:

1. NO CLEAN-OUT SHALL BE PLACED IN FRONT OF DRIVEWAYS EXCEPT ON CUL-DE-SACS.
2. CONCRETE SHALL CONTAIN NOT LESS THAN 550 POUNDS OF CEMENTITIOUS MATERIAL PER CUBIC YARD WITH 4% AIR ENTRAINMENT.
3. FINISH GRADE STAKE SHALL BE SET AT EACH CLEAN-OUT TO CONFIRM MAXIMUM DEPTH OF 1/8 BEND IS NOT EXCEEDED.

| APPROVED BY CITY ENGINEER | | CITY OF VICTORVILLE - ENGINEERING DEPARTMENT | |
|---|---|---|---|
| | | SEWER CLEAN-OUT | SS-04 |
| DATE | INITIALS | | |
| 05/05/09 | JAM | JOHN A. MCGLADE, CITY ENGINEER | SHEET 1 OF 1 |

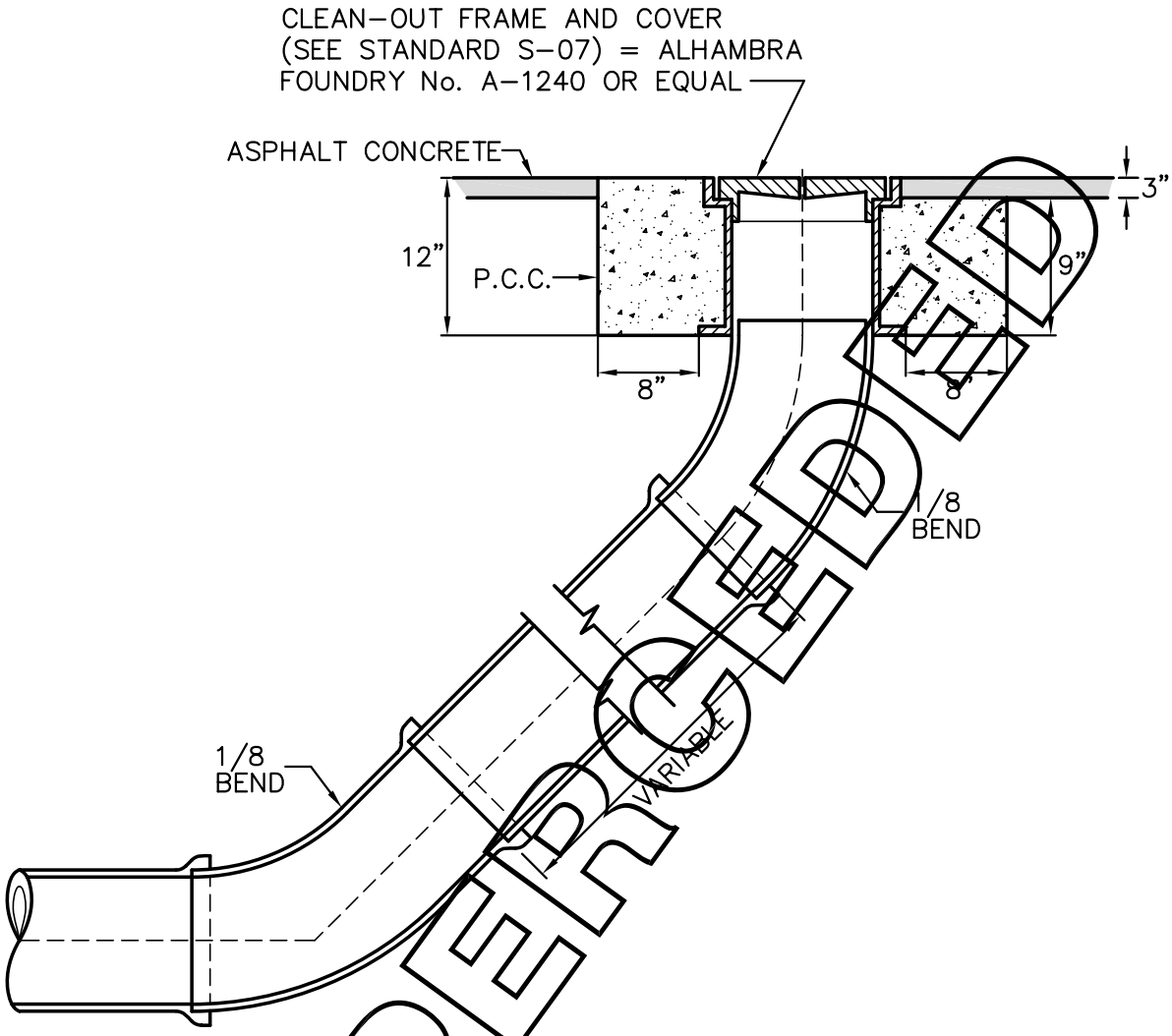


SUPERSEDED

## NOTES:

1. NO CLEAN-OUT SHALL BE PLACED IN FRONT OF DRIVEWAYS EXCEPT ON CUL-DE-SACS.
2. CONCRETE SHALL CONTAIN NOT LESS THAN 550 POUNDS OF CEMENTITIOUS MATERIAL PER CUBIC YARD WITH 4% AIR ENTRAINMENT.
3. FINISH GRADE STAKE SHALL BE SET AT EACH CLEAN-OUT TO CONFIRM MAXIMUM DEPTH OF 1/8 BEND IS NOT EXCEEDED.

| REV. | DATE | BY | | |
|---|---|---|---|---|
| CITY OF VICTORVILLE - ENGINEERING DEPARTMENT | | | | |
| | 1/23/67 | PATTERSON | **SEWER CLEAN-OUT** | **SS-04** |
| 1 | 3/22/93 | D.G.H. | | |
| 2 | 7/25/07 | STAFF | JOHN A. MCGLADE, CITY ENGINEER | SHEET 1 OF 1 |

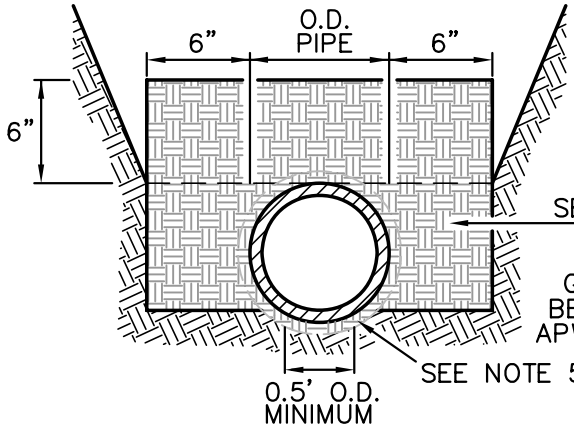


## NORMAL BEDDING

LINEAR FEET = 1.5

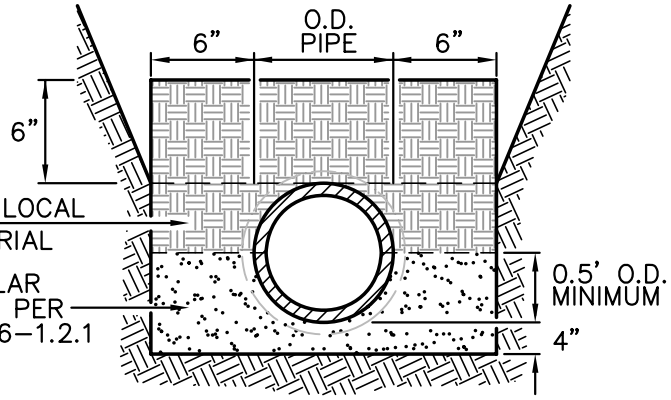


## GRANULAR BEDDING

LINEAR FEET = 1.9

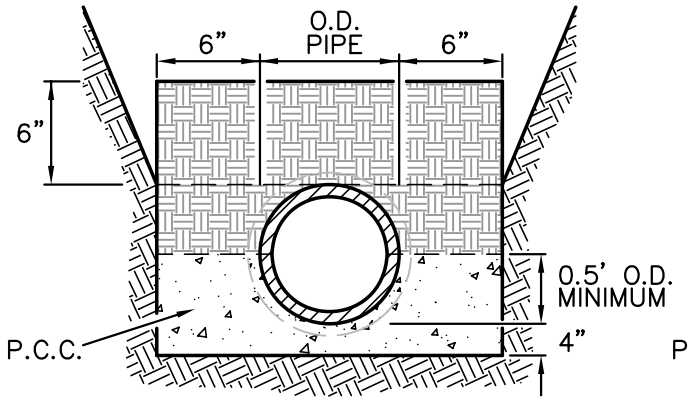


## CONCRETE CRADLE

LINEAR FEET = 3.0

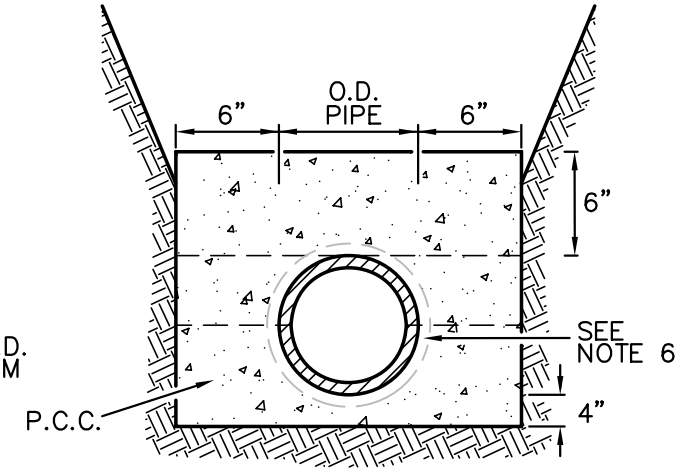


## CONCRETE ENCASEMENT

LINEAR FEET = 4.5

## NOTES:

1. WIDTH OF TRENCH AT TOP OF PIPE SHALL BE 21" MINIMUM.
2. CONCRETE SHALL BE MINOR CONCRETE PER SECTION 90 OF STANDARD SPECIFICATIONS.
3. BEDDING SHALL BE PLACED IN 6" LAYERS AND MECHANICALLY COMPACTED TO A HEIGHT OF 6" ABOVE THE TOP OF THE PIPE.
4. TRENCH EXCAVATION AND BACKFILL SHALL BE IN ACCORDANCE WITH SECTION 306.1 OF THE STANDARD SPECIFICATIONS FOR PUBLIC WORKS CONSTRUCTION AND CITY STANDARD DRAWING S-10.
5. HAND SHAPED BOTTOM EITHER IN UNDISTURBED SOIL OR IN APPROVED GRANULAR MATERIAL AT LEAST 1" BELOW BELL OR COLLAR.
6. PLACE ONE LAYER OF 15# BUILDING PAPER AS BOND BREAKER AROUND PIPE AND COUPLINGS.

| REV. | DATE | BY | | |
|---|---|---|---|---|
| CITY OF VICTORVILLE - ENGINEERING DEPARTMENT | | | | |
| | 1/24/67 | R.S. | CLAY SEWER PIPE BEDDING | SS-05 |
| 1 | 3/23/93 | D.G.H. | | |
| 2 | 6/1/07 | STAFF | JOHN A. McGLADE, CITY ENGINEER | SHEET 1 OF 2 |

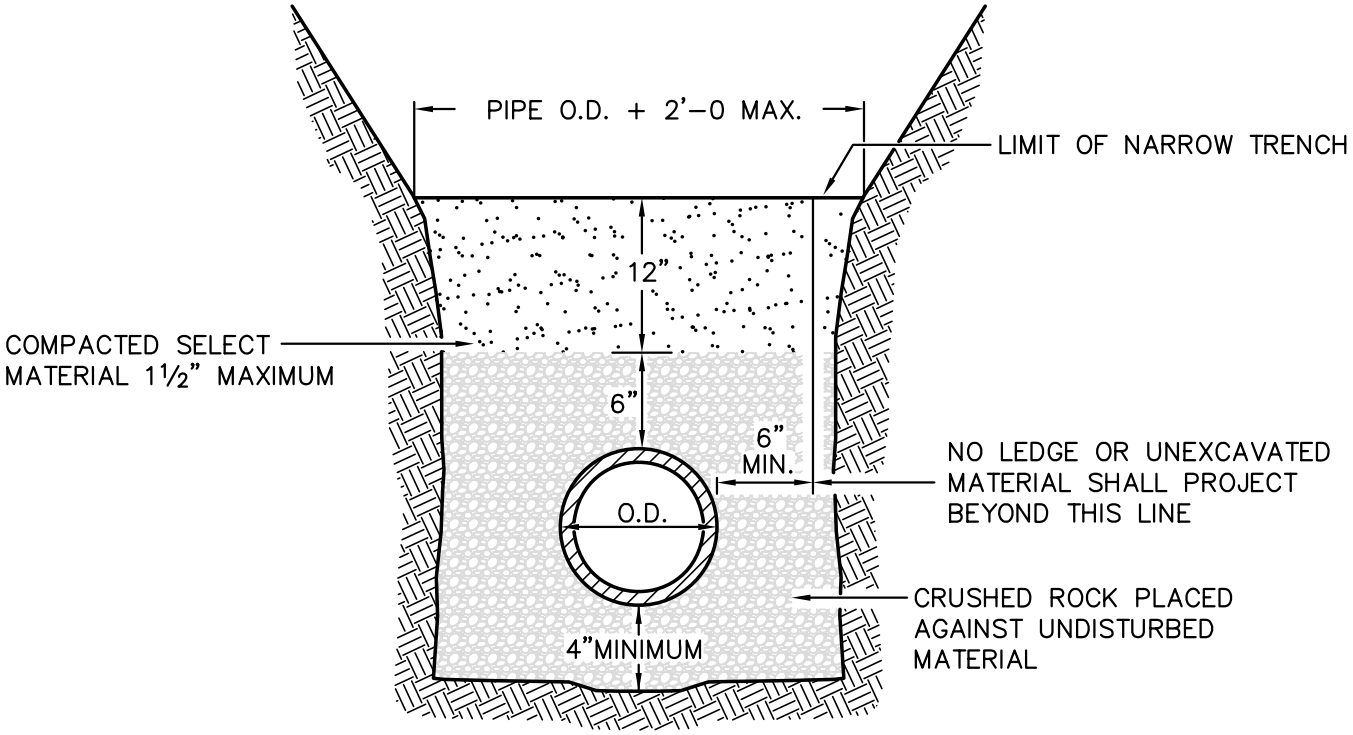


# PVC PIPE BEDDING

NOT TO SCALE

## NOTES:

1. P.V.C. PIPE SHALL CONFORM TO THE REQUIREMENTS OF ASTM D-2680, D-3034 AND F-679 WITH AN SDR VALUE NOT MORE THAN 35 OR F-949.
2. BEDDING SHALL BE PLACED IN 6" LAYERS AND MECHANICALLY COMPACTED TO 12" ABOVE PIPE.
3. TRENCH EXCAVATION AND BACKFILL SHALL BE PER SECTION 306.1 OF THE STANDARD SPECIFICATIONS FOR PUBLIC WORKS CONSTRUCTION AND CITY STANDARD DRAWING S-10.
4. THE CRUSHED ROCK BEDDING SHALL CONFORM TO THE REQUIREMENTS OF THE STANDARD SPECIFICATIONS FOR PUBLIC WORKS CONSTRUCTION 306-1.2.13.

| REV. | DATE | BY | | |
|---|---|---|---|---|
| CITY OF VICTORVILLE - ENGINEERING DEPARTMENT | | | | |
| | 7/28/89 | R.S. | PVC SEWER PIPE BEDDING | SS-05 |
| 1 | 3/23/93 | D.G.H. | | |
| 2 | 6/1/07 | STAFF | JOHN A. McGLADE, CITY ENGINEER | SHEET 2 OF 2 |

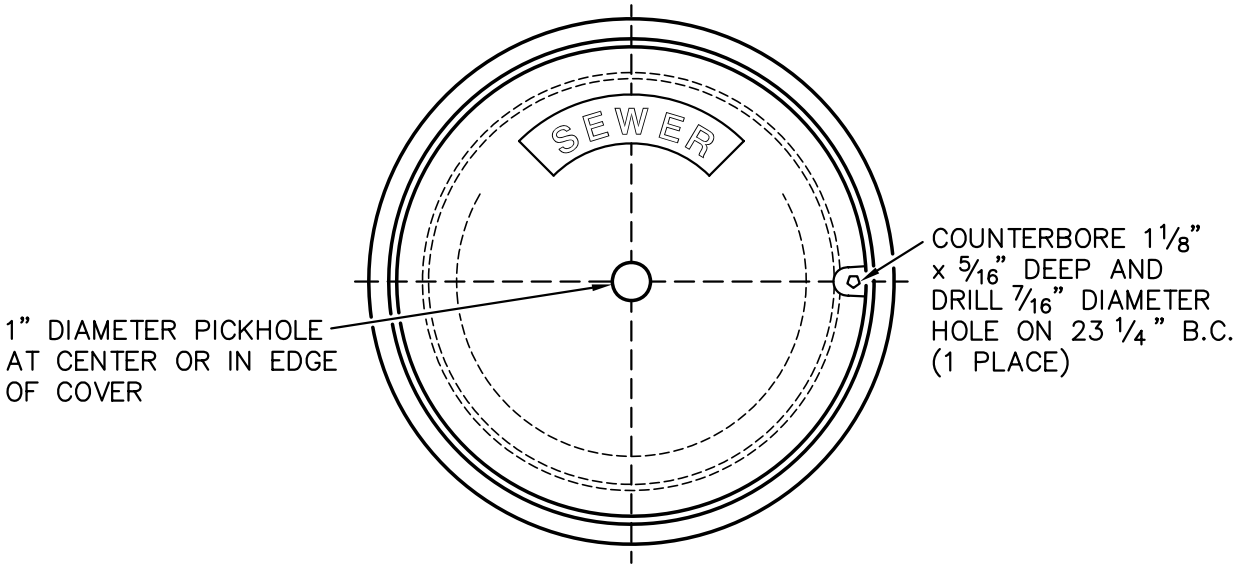


## PLAN OF FRAME

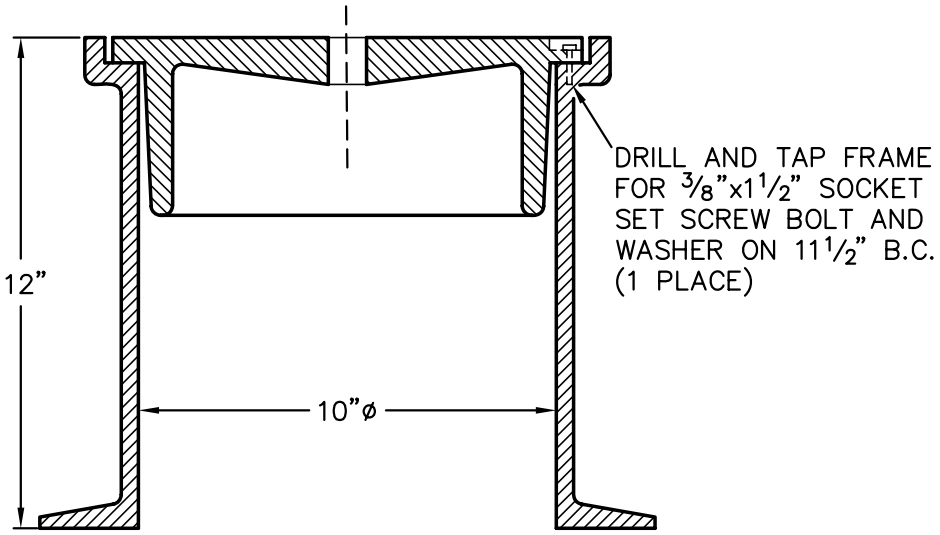


## SECTION THROUGH FRAME AND COVER

NOTES:

1. MANHOLE FRAME AND COVER TO BE MANUFACTURED FROM CLASS 35 CAST IRON PER ASTM A–48.
2. FRAME AND COVER SHALL BE CAPABLE OF SUPPORTING H–20 WHEEL LOADING.
3. COVER SHALL HAVE CAST INTO TOP IN 1" HIGH MINIMUM BLOCK LETTERS "SEWER", MANUFACTURER'S NAME OR INSIGNIA SHALL BE CAST INTO BOTH FRAME AND COVER.
4. PAINT FRAME AND COVER WITH BLACK BITUMINOUS PAINT.
5. APPROVED SUPPLIERS: ALHAMBRA FOUNDRY A–1240.

| CITY OF VICTORVILLE - ENGINEERING DEPARTMENT | | | | |
|---|---|---|---|---|
| REV. | DATE | BY | CLEAN-OUT FRAME AND COVER | SS-06 |
| | 5/18/93 | D.G.H. | | |
| 1 | 6/1/07 | STAFF | JOHN A. McGLADE, CITY ENGINEER | SHEET 1 OF 1 |

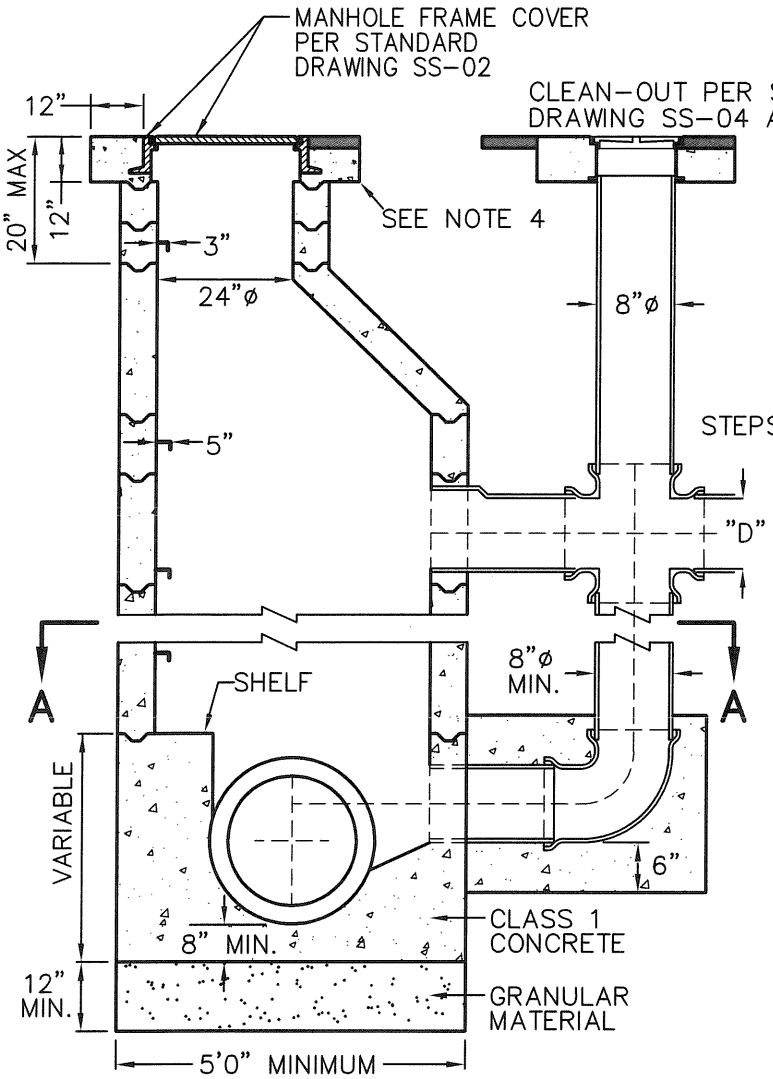


SANITARY SEWER MANHOLE
PER STANDARD DRAWING SS-01

## SECTIONAL VIEW

NOT TO SCALE

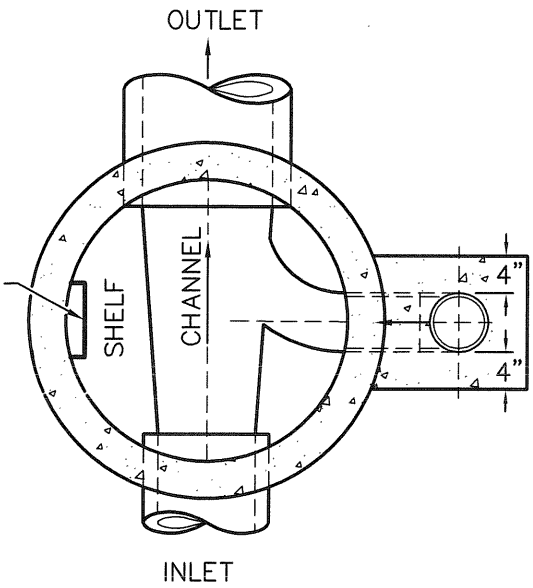


## SECTION A–A

NOT TO SCALE

## NOTES:

1. WHEN PIPE IS LAID THROUGH THE MANHOLE, THE TOP HALF OF THE PIPE SHALL BE REMOVED TO THE CONTOUR OF THE INSIDE OF THE MANHOLE AND THE BROKEN EDGE SHALL BE PLASTERED SMOOTH WITH CEMENT MORTAR.
2. CONCRETE SHALL BE CLASS 1 PER SECTION 90 OF STANDARD SPECIFICATIONS.
3. PROVIDE FLEXIBLE JOINT IN MANHOLE WALL OR WITHIN 12" OF OUTSIDE FACE FOR VCP ONLY.
4. IN AREAS WHERE MANHOLE IS IN A DIRT EASEMENT, A MINIMUM 12" WIDE BY 12" DEEP PAD OR PRE-CAST FRAME AND LID WILL BE REQUIRED AROUND MANHOLE LID AND FRAME.

| APPROVED BY CITY ENGINEER | | CITY OF VICTORVILLE - ENGINEERING DEPARTMENT | |
|---|---|---|---|
| | | SANITARY SEWER DROP MANHOLE | SS-07 |
| DATE | INITIALS | | |
| 05/05/09 | JAM | JOHN A. MCGLADE, CITY ENGINEER | SHEET 1 OF 1 |

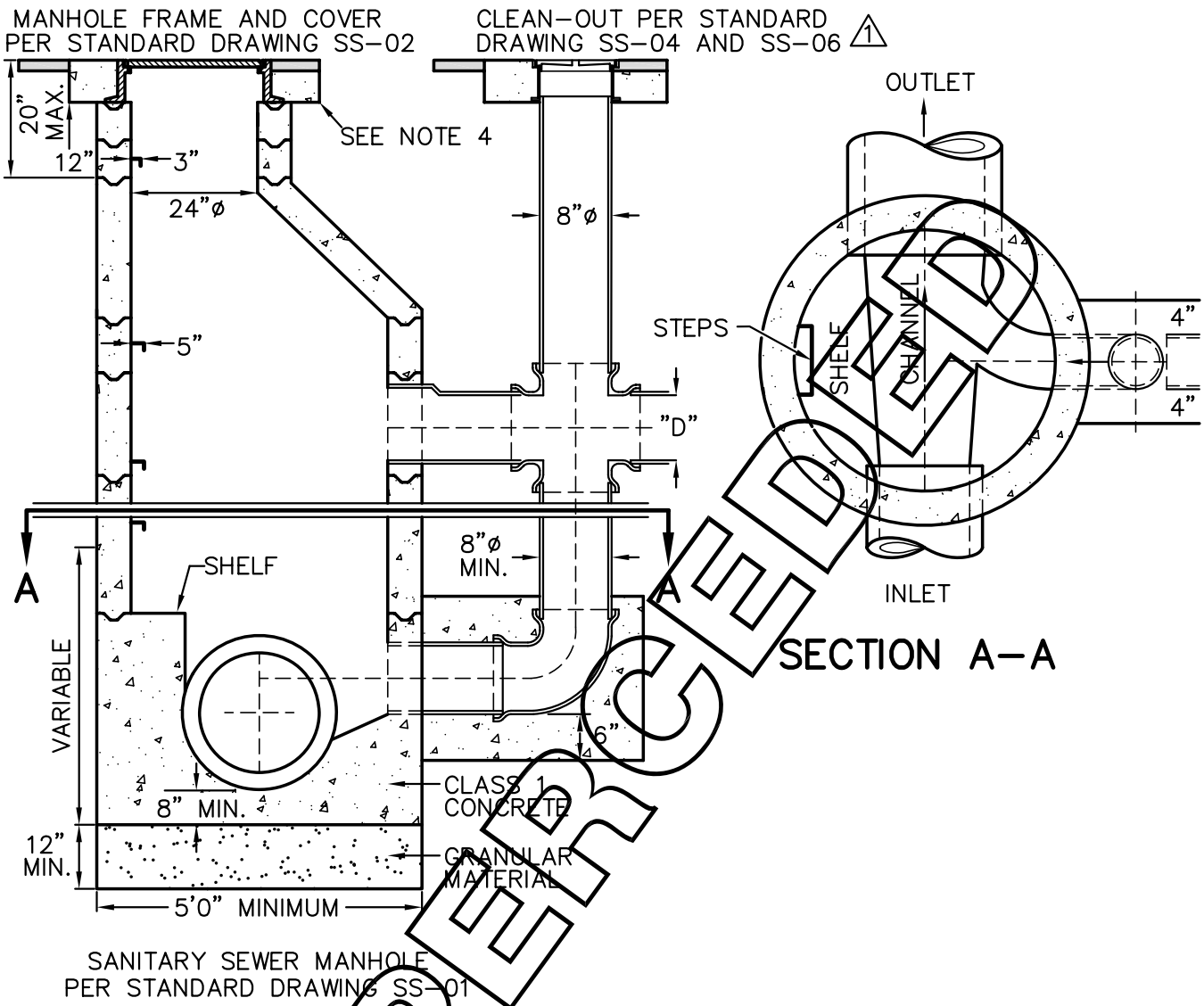


SUPERCEDED

## NOTES:

1. WHEN PIPE IS LAID THROUGH THE MANHOLE, THE TOP HALF OF THE PIPE SHALL BE REMOVED TO THE CONTOUR OF THE INSIDE OF THE MANHOLE AND THE BROKEN EDGE SHALL BE PLASTERED SMOOTH WITH CEMENT MORTAR.
2. CONCRETE SHALL BE CLASS 1 PER SECTION 90 OF STANDARD SPECIFICATIONS.
3. PROVIDE FLEXIBLE JOINT IN MANHOLE WALL OR WITHIN 2'0" OF OUTSIDE FACE FOR VCP ONLY.
4. IN AREAS WHERE MANHOLE IS IN A DIRT EASEMENT, A MINIMUM 12" WIDE BY 12" DEEP PAD OR PRE-CAST FRAME AND LID WILL BE REQUIRED AROUND MANHOLE LID AND FRAME.

| REV. | DATE | BY | | |
|---|---|---|---|---|
| CITY OF VICTORVILLE - ENGINEERING DEPARTMENT | | | | |
| 1/20/94 | BLOMQUIST | | SANITARY SEWER DROP MANHOLE | SS-07 |
| 1 | 4/26/99 | H.A.A. | | |
| 2 | 7/25/07 | STAFF | JOHN A. MCGLADE, CITY ENGINEER | SHEET 1 OF 1 |

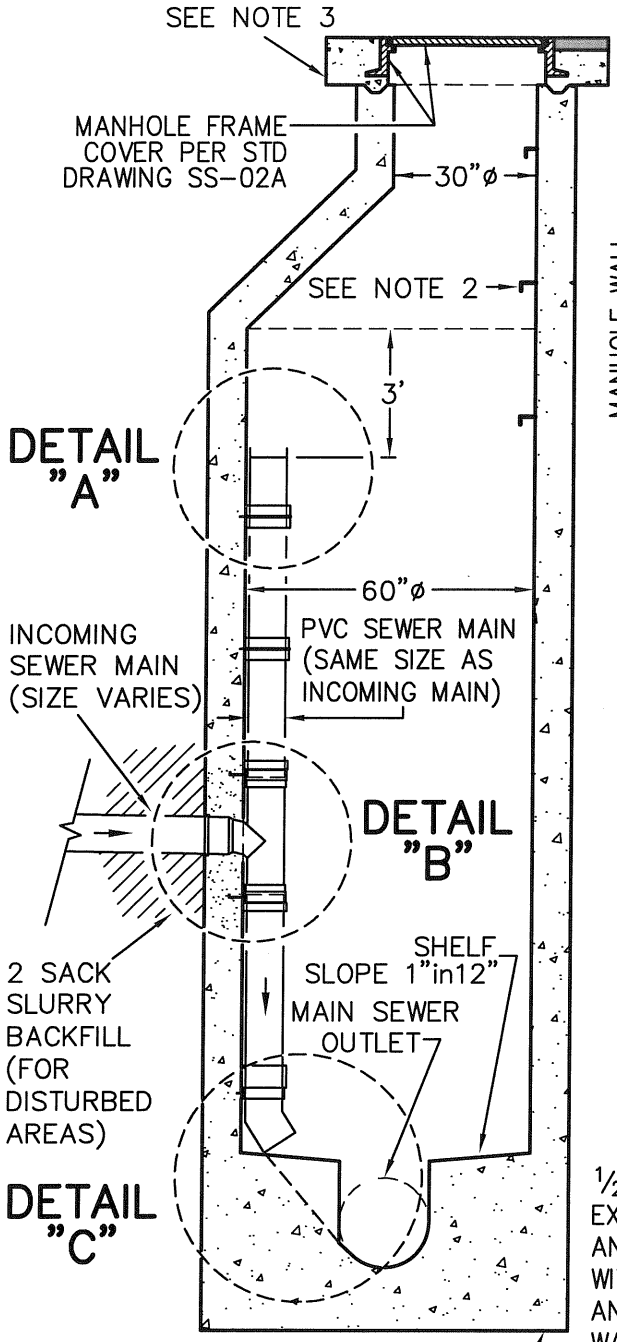


SECTIONAL VIEW
NOT TO SCALE

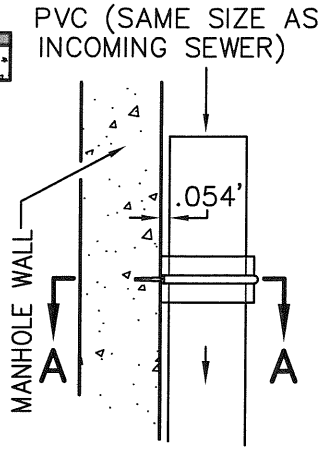


DETAIL "A"

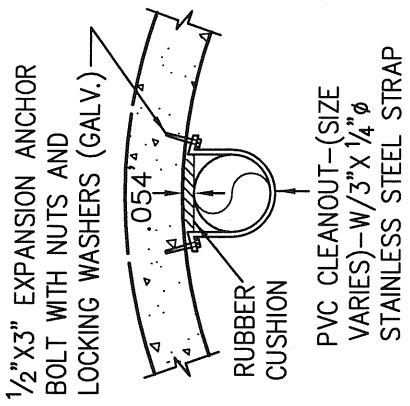


SECTION A–A

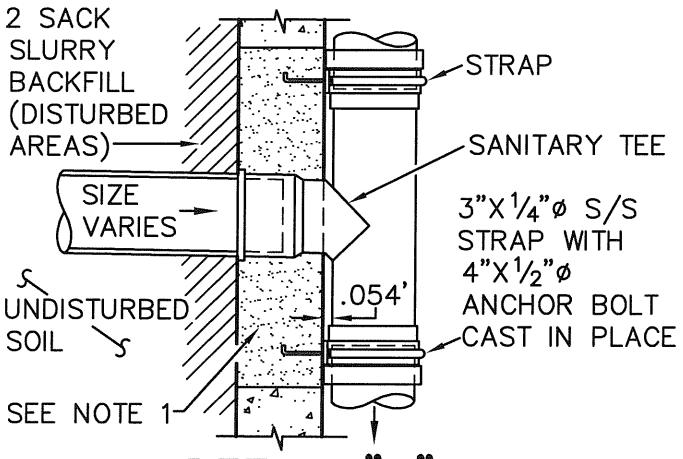


DETAIL "B"

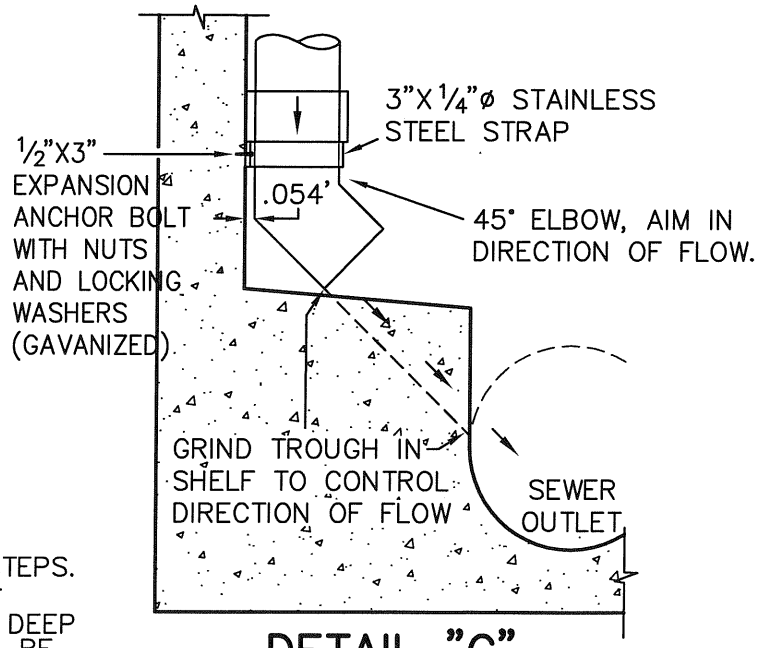


DETAIL "C"

## NOTES:

1. CORE THROUGH MANHOLE WALL AND RECONSRUCT WITH WATERPROOF GROUT.
2. DROP PIPE SHALL NOT CONFLICT WITH STEPS.
3. IN AREAS WHERE MANHOLE IS IN A DIRT EASEMENT, A MINIMUM 12" WIDE BY 12" DEEP PAD OR PRE-CAST FRAME AND LID WILL BE REQUIRED AROUND MANHOLE LID AND FRAME.

| APPROVED BY CITY ENGINEER | | CITY OF VICTORVILLE - ENGINEERING DEPARTMENT | |
|---|---|---|---|
| | | SANITARY SEWER MANHOLE WITH INTERNAL SEWER MAIN DROP | SS-07A |
| DATE | INITIALS | | |
| 04/08/09 | J. McGlade | JOHN A. MCGLADE, CITY ENGINEER | SHEET 1 OF 1 |

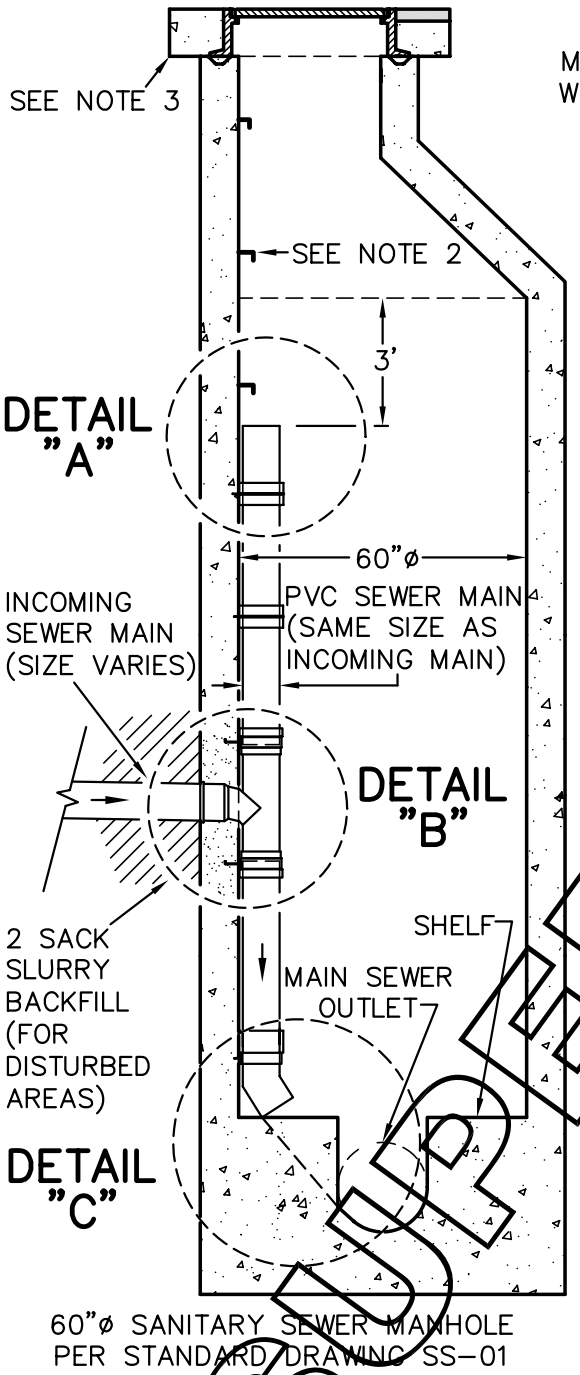


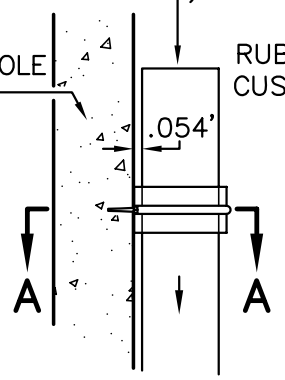


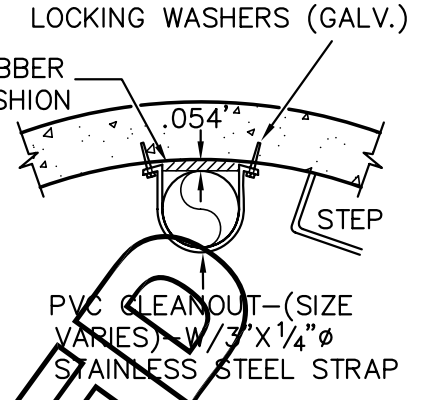


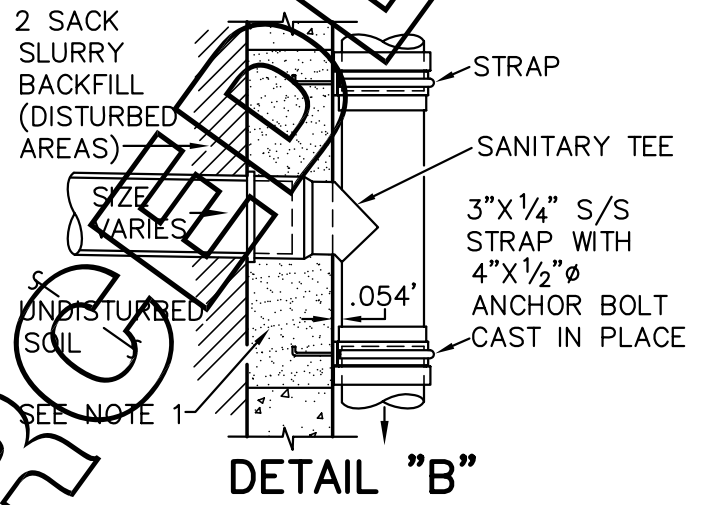


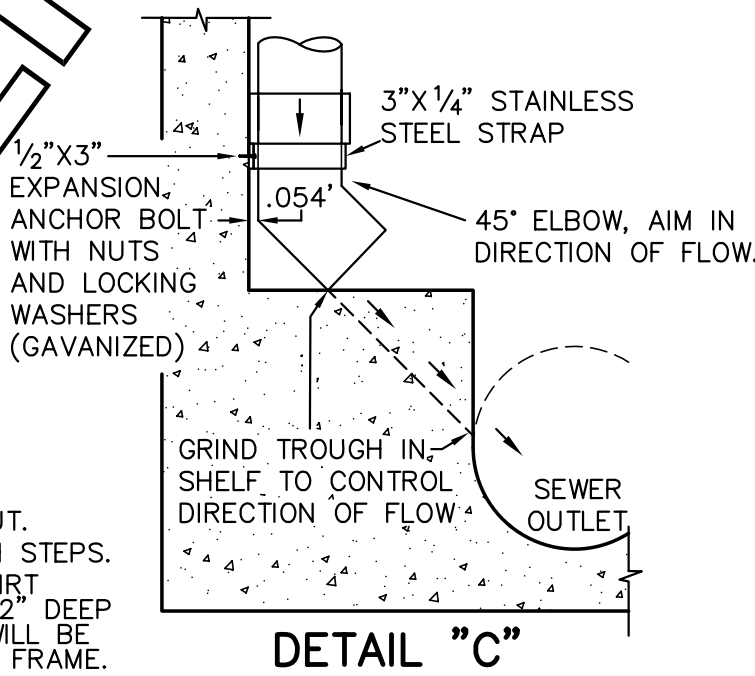


SUPERCEDED

## NOTES:

1. CORE THROUGH MANHOLE WALL AND RECONSRUCT WITH WATERPROOF GROUT.
2. DROP PIPE SHALL NOT CONFLICT WITH STEPS.
3. IN AREAS WHERE MANHOLE IS IN A DIRT EASEMENT, A MINIMUM 12" WIDE BY 12" DEEP PAD OR PRE-CAST FRAME AND LID WILL BE REQUIRED AROUND MANHOLE LID AND FRAME.

| CITY OF VICTORVILLE - ENGINEERING DEPARTMENT | | | | |
|---|---|---|---|---|
| REV. | DATE | BY | SANITARY SEWER MANHOLE WITH INTERNAL SEWER MAIN DROP | SS-07A |
| | 5/10/01 | A.S. | | |
| 1 | 7/25/07 | STAFF | JOHN A. MCGLADE, CITY ENGINEER | SHEET 1 OF 1 |

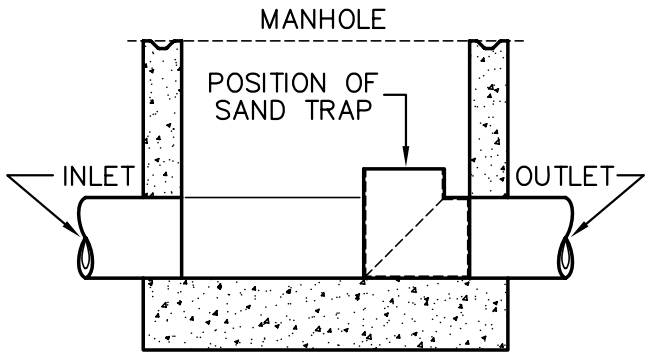


SECTIONAL VIEW OF MANHOLE WITH LOCATION OF SAND TRAP

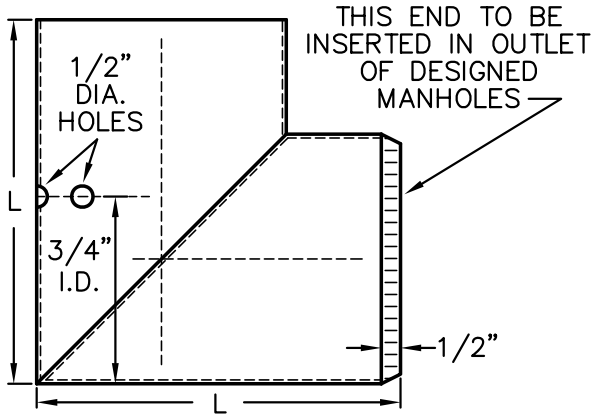


SIDE VIEW

**DIMENSIONS OF TRAP**

| I.D. | LENGTH |
|---|---|
| 8" | 10–1/2" |
| 10" | 12–1/2" |
| 12" | 16" |
| 15" | 18" |
| 18" | 19" |

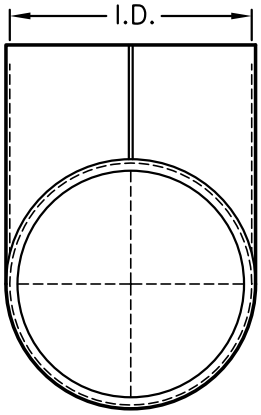


END VIEW

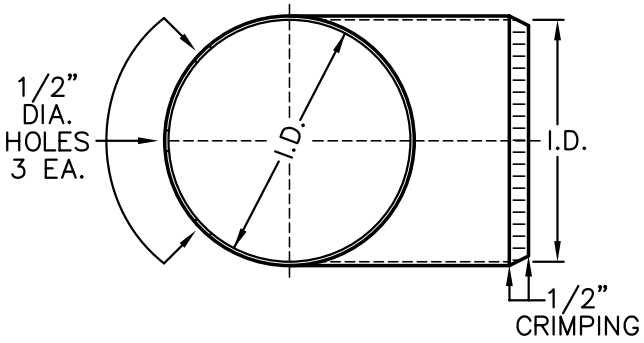


TOP VIEW

NOTES:

1. ALL SEAMS TO BE INTERLOCKING SEAMS AND SHALL BE SOLDERED.
2. TRAP TO BE CONSTRUCTED OF 20 GAUGE GALVANIZED SHEET METAL.
3. PLACE TRAPS IN ALL MANHOLES IN WORK AREA AND ONE IN MANHOLE BELOW WORK AREA BEFORE COMMENCING WORK.
4. CLEAN ALL MANHOLES AND REMOVE TRAPS AFTER COMPLETION OF WORK.

| REV. | DATE | BY | | |
|---|---|---|---|---|
| CITY OF VICTORVILLE - ENGINEERING DEPARTMENT | | | | |
| 1/18/67 | PATTERSON | | TEMPORARY SAND TRAP | SS-08 |
| 1 | 3/24/93 | D.G.H. | | |
| 2 | 6/1/07 | STAFF | JOHN A. McGLADE, CITY ENGINEER | SHEET 1 OF 1 |

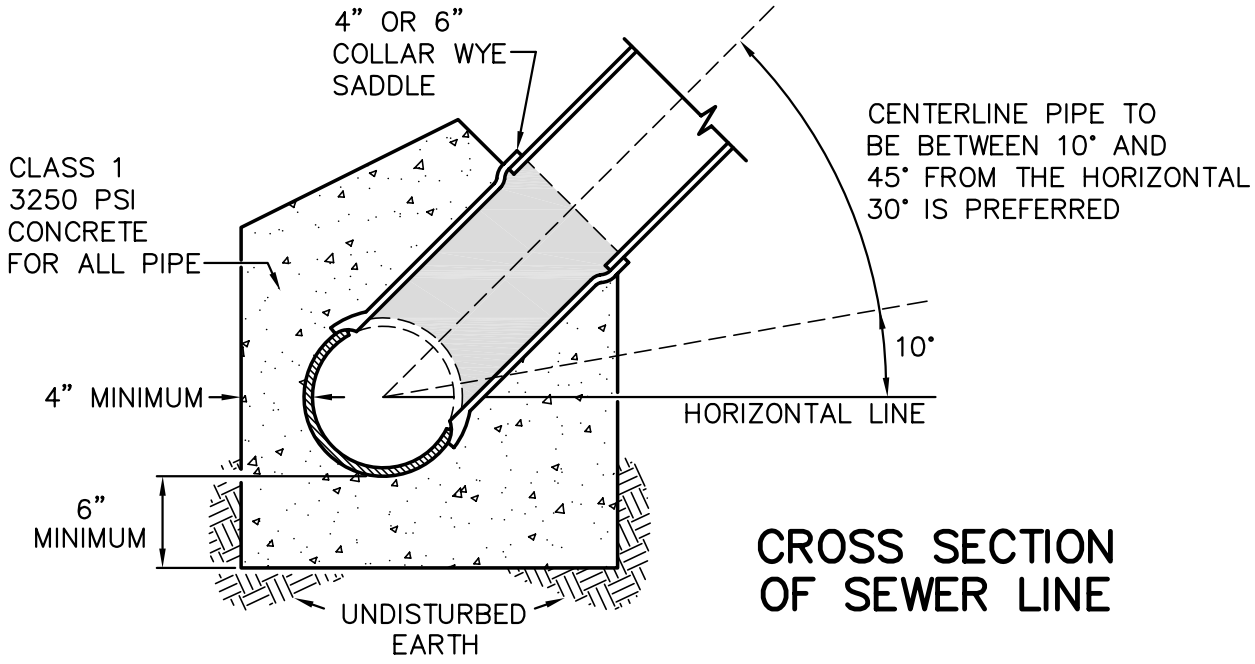


# CROSS SECTION OF SEWER LINE

## NOTES:

ALL PIPE

1. CALL FOR INSPECTION 2 WORKING DAYS IN ADVANCE OF CUTTING THE PIPE. INSPECTOR MUST BE PRESENT TO OVERSEE THE CUTTING AND SADDLING OPERATION.
2. IF PIPE IS CRACKED, BROKEN OR DAMAGED IN ANY WAY IT SHALL BE REPLACED.
3. MAKE NORMAL SIZE OPENING FOR SADDLE IN MAIN LINE SEWER PIPE 12" MINIMUM CLEAR OF THE BELL. ON CLAY PIPE SAWCUT ON CENTER OPENING AND USE NIPPERS TO ENLARGE OPENING TO SIZE. ON P.V.C. PIPE USE KEY HOLE SAW.
4. REPAIR STREET PER CITY STANDARD DRAWING S–10.

CLAY PIPE

5. WIRE SADDLE IN PLACE WITH 12 GAUGE GALVANIZED STEEL WIRE. USE SILICONE CAULK TO SEAL SADDLE TO PIPE. SADDLE MUST NOT PROTRUDE INTO THE MAIN LINE.
6. PLACE CLASS 1, 3250 PSI, CONCRETE AROUND MAIN LINE AND SADDLE AND 18" ALONG THE MAIN LINE PIPE PER THE CROSS SECTION ABOVE.
7. CURE CONCRETE BY COVERING WITH 12" OF WET EARTH. DO NOT BACKFILL UNTIL THE CONCRETE IS CURED SUFFICIENTLY TO WITHSTAND THE BACKFILL OPERATION.

P.V.C. PIPE

8. USE STANDARD MANUFACTURED SADDLES RECOMMENDED BY THE MAIN LINE PIPE MANUFACTURER BEING SADDLED. ALL SADDLES SHALL HAVE ELASTOMERIC SEALS AND SHALL BE INSTALLED PER THE MANUFACTURER'S RECOMMENDATIONS.
9. SADDLES SHALL BE BANDED TO THE MAIN LINE SEWER WITH A MINIMUM OF 2 EACH 1/2" WIDE STAINLESS STEEL BAND CLAMPS.
10. REPLACE PIPE BEDDING PER CITY STANDARD DRAWING SS–05 AND BACKFILL.

| REV. | DATE | BY | | |
|---|---|---|---|---|
| CITY OF VICTORVILLE - ENGINEERING DEPARTMENT | | | | |
| | 1/23/67 | PATTERSON | SANITARY SEWER SADDLE | SS-09 |
| 1 | 3/24/93 | D.G.H. | | |
| 2 | 6/1/07 | STAFF | JOHN A. MCGLADE, CITY ENGINEER | SHEET 1 OF 1 |

# BLANK INTENTIONALLY

| CITY OF VICTORVILLE - ENGINEERING DEPARTMENT | | | | |
|---|---|---|---|---|
| REV. | DATE | BY | PUMP STATION MANHOLE TOP SLAB | SS-10 |
| | 11/4/75 | T.D.W. | | |
| 1 | 6/1/07 | STAFF | JOHN A. McGLADE, CITY ENGINEER | SHEET 1 OF 1 |

OBSOLETE

CITY OF VICTORVILLE
INCORPORATED SEPT. 21, 1962
HOME OF THE SAN BERNARDINO COUNTY FAIR
CALIFORNIA

| CITY OF VICTORVILLE<br>ENGINEERING DEPT. FEES | | | |
|---|---|---|---|
| **ITEM DESCRIPTION** | **CURRENT FEE** | **AUTHORITY** | **LATEST REVISION** |
| 1. MAP CHECKING<br>Parcel Map<br>Final Map | <br>$1,000.00 + $30.00/parcel<br>1,200.00 + 20.00/lot | <br>Reso. 97-73<br>✓ | |
| | | | |
| 2. MAP CHECKING – REVERSION TO ACREAGE<br>Parcel Map Required<br>Final Map Required | <br>$ 500.00<br>600.00 | <br>Reso. 97-73<br>✓ | |
| | | | |
| 3. FINAL MAP & PARCEL MAP RE-CHECKING<br>Actual staff time for 4th and each subsequent re-check<br>Resulting from changes caused by the Engineer | <br>$ 15.00 minimum fee | <br>Reso. 97-73 | |
| | | | |
| 4. PARCEL MAP & FINAL MAP FILING<br>Current recording fee required by Recorder for each map | <br>TBD by Recorder's Office | <br>Reso. 97-73 | |
| | | | |
| 5. IMPROVEMENT PLAN CHECKING<br>Improvement Plan Check, Street, Sewer & Storm Drain<br><br><br><br><br><br>Traffic Signal Plan Check (includes inspections<br>Signal in City's jurisdiction<br>Signal located in multi-jurisdictional intersection<br><br>6. Improvement Plan Re-checking (excludes Traffic Signal Plan Check)<br>Actual staff time for 4th & each subsequent re-check<br>Resulting from changes caused by the Engineer | <br><u>Engineering Cost Estimate</u> <u>Fee</u><br>$ 0 - $ 25,000 4.0%<br>25,001 - 100,000 3.5%<br>> - 100,001 3.0%<br><u>The above fees are accumulative.</u><br><br><u>Fee</u><br>1%<br>½%<br><br><br>$ 15.00 minimum fee. | <br>Reso. 97-73<br><br><br><br><br><br>Reso. 97-73<br><br><br><br><br>Reso. 97-73 | |
| | | | |
| 7. CONSTRUCTION INSPECTION<br><br><br><br><br><br>Re-inspection fee shall be rendered for each occasion when the contractor is not ready for the inspection at the scheduled time. No further inspections will be performed until said fee is paid. | <u>Engineer Cost Estimate</u> <u>Fee</u><br>$ 0 - $ 25,000 4.0%<br>25,001 - 100,000 3.5%<br>> - 100,001 3.0%<br><u>The above fees are accumulative.</u><br><br><br>$100.00 | Reso. 97-73<br><br><br><br><br><br><br><br>Reso. 97-73 | |

| ITEM DESCRIPTION | CURRENT FEE | AUTHORITY | LATEST REVISION |
|---|---|---|---|
| 8. GRANTS OF EASEMENTS DEED & OFFERS OF DEDICATIONS<br>a. 1) Checking an "OF" description<br>2) Checking an "OF" description w/property return<br>3) Checking metes & bounds description w/all backup references and calcs. provided.<br><br>b. 1) Preparation of an "OF" description<br>2) Preparation of an "OF" description w/property return<br>3) Preparation of a metes & bounds legal description. | <br>$ 10.00/parcel<br>15.00/parcel<br>25.00/parcel<br><br>15.00/parcel<br>20.00/parcel<br>100.00/parcel | Reso. 97-73<br>✓<br>✓<br>✓<br><br>✓<br>✓<br>✓ | |
| | | | |
| 9. CONSTRUCTION & EXCAVATION PERMIT INSPECTION FEE SCHEDULE<br><br><u>Trench Excavation:</u><br>400 lin. ft or less<br>401 to 500 lin. ft.<br>over 500 lin. ft.<br><br><u>Manholes, Catch Basins, Underground Vaults, etc.</u><br>4 or less<br>5 to 10<br>Over 10<br><br><u>Curbs, Gutters, Sidewalks and Street Surface not Associated with a Subdivision of Land</u><br>When the Superintendent of Streets determines that engineered plans are required prior to the issuance of a permit, fees for plan check and inspections shall be determined in accordance with the schedule contained in Reso. No. 97-73 for subdivisions. | <br><br>$ 0.10 per lin. ft.<br>40.00 plus 0.09 per lin. ft. over 400 lin ft.<br>49.00 plus 0.08 per lin ft.<br><br>$ 8.00 each<br>32.00 plus $7.00 each over 4<br>67.00 plus $6.00 each over 10<br><br><br>TBD by Engineer | <br><br><br>Reso. 97-74<br>✓<br>✓<br><br><br>Reso. 97-74<br>✓<br>✓<br><br><br>Reso. 97-74 | |
| | | | |
| Researching status of projects requested by persons other than property owner or developer. | Staff's actual time plus vehicle time where necessary | Reso. 97-75 | |
| | | | |

| ITEM DESCRIPTION | CURRENT FEE | AUTHORITY | LATEST REVISION |
|---|---|---|---|
| Processing of vacations of Public Right-of-Way<br>a. Summary vacation, applicant provide legal description & map<br>b. Summary vacation, City prepares legal description & map<br>c. Public hearing or 2-step vacation, applicant provides legal desc. & map.<br>d. Public hearing or 2-step vacation, City prepares legal desc. & map. | <br>$ 75.00<br>Staff time less $10.00<br>$190.00<br><br>Staff time, less $10.00 | <br>Reso. 97-76<br>✓<br>✓<br><br>✓ | |
| Monument Field Inspection | $20.00 + $2.00 per monument, fee paid prior to map recordation | Reso. 97-77 | |
| | | | |
| REPAIR EXCAVATION, CONSTRUCTION PERMITS | | Ordinance #1854 | |
| Issuance Fee:<br>Encroachment Permit<br>Residential Driveway<br>Const. Sidewalk, curb & gutter existing<br>Commercial Driveway | $ 5.00<br>15.00 in addition to issuance fee<br>15.00 in addition to issuance fee<br>25.00 in addition to issuance fee<br>25.00 in addition to issuance fee | ✓<br>✓<br>✓<br>✓<br>✓<br>✓ | |

CITY OF VICTORVILLE
INCORPORATED SEPT. 21, 1962
HOME OF THE SAN BERNARDINO COUNTY FAIR
CALIFORNIA

# CITY OF VICTORVILLE

## ENGINEERING DEPARTMENT

# *WATER STANDARD SPECIFICATIONS FOR PUBLIC IMPROVEMENTS*

All public improvements constructed by or under the inspection of the City of Victorville shall conform to these specifications and the references contained herein. The design and construction standards used for any project should equal or exceed the minimum given in these Water Standard Specifications to the maximum extent feasible. The design and construction standards that are set herein are to provide a guide for the engineers and contractors to exercise sound judgment in applying standards with the approval of the City Engineer.

Public improvements undertaken by the City of Victorville may deviate from these specifications with plan and specification approval by the City Engineer. In the event of conflicts between any provision contained in these Water Standard Specifications and the references contained herein, these Water Standard Specifications shall govern, unless they conflict with State or Federal regulations.

Date: October 21, 2008

John A. McGlade 10/21/08

John A. McGlade, P.E., City Engineer
R.C.E. 40935, Expires 3/31/09

REGISTERED PROFESSIONAL ENGINEER
JOHN A. McGLADE
No. 40935
Exp. 3/31/09
CIVIL
STATE OF CALIFORNIA

# VICTORVILLE WATER DISTRICT
# APPROVED MATERIALS LIST

| NO | ITEM | DESCRIPTION | MANUFACTURER | MODEL |
|---|---|---|---|---|
| **1** | **PIPE** | | | |
| 1-A | 4" to 12" PVC | C-900, Class 200 | PW Eagle, Vinyl Tech, N.A.P.C.O., Certain Teed | |
| 1-B | 14" to 48" PVC | C-905, Class 235 | PW Eagle, Vinyl Tech, Diamond Plastics | |
| 1-C | Ductile Iron Pipe | Class 250/350, Asphalt Coated | American Ductile Iron, Pacific States,Griffin Pipe | |
| 1-D | Copper Tubing | 1-inch: Use Type K Soft<br>2-inch: Use Type L Rigid | American Made Only | |
| 1-E | CML&C Pipe | Cement Mortar Lined & Coated Steel Pipe, Min. Steel Wall Thickness:10GA (0.135) | West Coast Pipe or Approved Equal | |
| 1-F | CML&C Pipe | Cement Mortar Lined & Coated Steel Pipe, Min. Steel Wall Thickness: 0.25" | West Coast Pipe or Approved Equal | |
| 1-G | Std, Steel Pipe | Schedule 40 Galvanized Steel | | |
| **2** | **VALVES** | | | |
| 2-A | Butterfly Valves | 12" to 48", Rubber Seat, Epoxy Coated Inside and Outside | Pratt/Mueller Co., Dezurik, Crispin/K-Flo | Line seal |
| 2-B | Gate Valves | 2" to 10" Resilient Wedge, Iron Body, Brass Mounted, Non-Rising Stem | Mueller,<br>American Flow Control | A-2360 |
| 2-C | Corporation Valves | 1" | Mueller,<br>Ford, | H-15028<br>F 1100-4-G |
| 2-D | Corporation Valves | 2" | Mueller,<br>Ford<br>A.Y. McDonald | H-10013<br>FB 500-7<br>4704B |
| 2-E | Angle Meter Valve | 1" Threaded | Mueller,<br>Jones,<br>Ford | H-14258 or<br>H-14277<br>J-1963W |
| 2-F | Angle Meter Valve | 2" Flanged | Mueller,<br>Jones,<br>Ford | |
| 2-G | Curb Valve | 3/4" to 3" | Mueller,<br>Jones | H-10914<br>J-372 |
| 2-H | Single Spring Check Valve | Spud x FIP | Mueller or approved equal | |
| 2-I | Ball Valve | 3/4" to 2" | Mueller or approved equal | B-20298 |
| 2-J | Wafer Check Valve | 3" and Larger | APCO, Crispin or Approved Equal | |

# VICTORVILLE WATER DISTRICT
# APPROVED MATERIALS LIST

| NO | ITEM | DESCRIPTION | MANUFACTURER | MODEL |
|---|---|---|---|---|
| **3** | **FIRE HYDRANTS** | | | |
| 3-A | Standard Fire Hydrant | High Pressure Dry Barrel with Traffic Break Away | Mueller, American Flow Control | Super Centurion, American Darling, Watrous |
| 3-B | Op-Nut Guard | Operating Nut Guard (for Mueller hydrants only), Powder Coated Yellow | Walker Enterprises<br>Bryan Walker<br>760-964-6510 | |
| | | | | |
| **4** | **BACKFLOW PREVENTER** | | | |
| 4-A | RP Backflow Device | Reduced Pressure Backflow Device as Approved by State of CA Department of Public Health Services | Ames Co., Febco, Watts Industries Inc., Wilkins, Zurn Industries, Flomatic(Danfoss) or any on DPHS (USC) List. | |
| 4-B | Insulating Cover | Thermal Insulating Cover with Water Resistant/Weatherproof exterior, and Tear-Proof Interior | Backflow Buddy,<br>BPDI or Approved Equal | |
| | | | | |
| **5** | **JOINT RESTRAINTS** | | | |
| 5-A | Bell Joint Restraint | C900, (Bell & Spigot) pipe to pipe | Romac,<br>Ford,<br>Sigma,<br>EBAA Iron | Style 611.<br>Series 1390.<br>SeriesPVP.<br>Series 1600 |
| | Bell Joint Restraint | Ductile Iron, (Bell & Spigot) pipe to pipe<br>Series 1600 for 4" to 12"<br>Series 1100 for 16" and larger pipe | EBAA Iron | Mega-Lug<br>Series 1600<br>or Series<br>1100 |
| 5-B | Flange Restraint | Restrained Flange Adaptor, PVC or DI | Romac,<br>EBAA IRON,<br>Sigma,<br>Tyler Union | Field Flange<br>Series 2100 |
| 5-C | Mechanical Joint Restraint | C900, Mechanical Joint Restraint | Romac,<br>Ford,<br>Sigma, | Grip Ring.<br>Series 1300.<br>Series PVM. |
| | Mechanical Joint Restraint | For Ductile Iron: Use Grip Ring for Pipe ≤12" Use GripRing or Approved Equal for Pipe > 12" | Romac,<br>EBAA IRON | GripRing<br>Series 1100 |
| | | | | |

# VICTORVILLE WATER DISTRICT
# APPROVED MATERIALS LIST

| NO | ITEM | DESCRIPTION | MANUFACTURER | MODEL |
|---|---|---|---|---|
| **6** | **PIPE FITTINGS** | | | |
| 6-A | Service Fitting | Compression Connection | Mueller,<br>Jones,<br>Ford | H-15451<br>J-2608<br>Grip Joint |
| 6-B | Ductile Iron Fittings | Tees and Crosses FL x FL | ACIPCO,<br>Sigma,<br>Tyler Union | |
| 6-C | Ductile Iron Fittings | Bends, Reducers, and End Caps (PO, MJ, FL) | ACIPCO,<br>Sigma,<br>Tyler Union | |
| 6-D | Bronze, Brass, & Copper Fittings | Bends, Tees, Couplings and Nipples | American Made Only | |
| 6-E | Spools | Class 350 Ductile Iron, 150# Flange | | |
| 6-F | PVC Fittings | Schedule 40 PVC Bends and Tees | | |
| | | | | |
| **7** | **TAPPING SLEEVES AND SADDLES** | | | |
| 7-A | 3" to 24" Tapping Sleeve | Stainless Steel | Romac,<br>Ford,<br>Mueller,<br>JCM,<br>Powerseal | SST III<br>FTSS<br>H-304 |
| 7-B | 1" to 2" Service Saddle | Bronze/Brass w/Double Strap | Mueller,<br>Jones,<br>Romac,<br>Powerseal | BR2B<br>J-975&J-979<br>202BS<br>3409 |
| 7-C | Reinforcement Steel | 3/16" Wall thickness for 6" to 20", 1/4" Wall thickness for 24" to 36" | | |
| 7-D | Outlet Nozzle | 3/16" Minimum Wall Thickness | | |
| 7-E | Flange | 150# | | |
| | | | | |
| **8** | **CASING** | | | |
| 8-A | Casing Spacer | | Advance Products & Sys., CCI Pipeline Sys. | Stainless Steel |
| 8-B | Steel Welded Pipe | 1/4" Thick | ACIPCO,<br>Ameron,<br>Northwest Pipe | |
| 8-C | End Seal | End Seal for Casing Ends, Using Stainless Steel Bolts | Advance Products & Sys., CCI Pipeline Sys., PS&I, Inc. | Innerlynx,<br>Wrap-It Link,<br>Link-Seal |

# VICTORVILLE WATER DISTRICT
# APPROVED MATERIALS LIST

| NO | ITEM | DESCRIPTION | MANUFACTURER | MODEL |
|---|---|---|---|---|
| **9** | **VAULTS** | | | |
| 9-A | Pre-Cast Vault | Per Plan | J&R Concrete, Jenson | |
| **9-B** | **Occasional Traffic Rated Valult Lid** | **H-20 load rating for Offstreet Locations** | **U.S.F. Fabrication, LASCO(Delco Sales)** | **THD** |
| 9-C | Traffic Rated Vault Lid | Per Plan | U.S.F. Fabrication, or approved equal | |
| 9-D | Meter Box | Polymer w/Two Piece Cover & Box with 2 Knockouts or approved equal. | J&R Concrete, Brooks, Armorcast | #5.25 |
| 9-E | Meter Box | Polymer w/Two Piece Cover & Box with 2 Knockouts or approved equal. | J&R Concrete, Brooks, Armorcast | #6 |
| 9-F | Vault Ladder | Ladder | Pipeline Products, Lane | VL-100 |
| | | | | |
| **10** | **LOCATING WIRE** | | | |
| 10-A | Wire | 12 Gauge Insulated Copper Solid Strand | | |
| 10-B | Wire Splice | Direct Bury Splice Kit | 3M DBR | |
| | | | | |
| **11** | **AIR VACUUM VALVES** | | | |
| 11-A | 1" Air Vac | | Valmatic, Crispin, APCO | |
| 11-B | 2" Air Vac | | Valmatic, Crispin, APCO | |
| 11-C | 4" Air Vac | | Valmatic, Crispin, APCO | |
| 11-D | 1" Air Vac Can | Steel | Pipeline Products Christy's | Steel |
| 11-E | 2" Air Vac Can | Steel | Pipeline Products Christy's | Steel |
| 11-F | 4" Air Vac Can | Steel | Pipeline Products Christy's | Steel |
| 11-G | Air Vac Insulator | Thermal Insulating Cover with Water Resistant/Weatherproof exterior, and Tear-Proof Interior | Backflow Buddy, BPDI or Approved Equal | |
| 11-H | Screened Cap | Stainless Steel Mesh or Approved Equal | Nowrthtown Company | Hytech |

# VICTORVILLE WATER DISTRICT
# APPROVED MATERIALS LIST

| NO | ITEM | DESCRIPTION | MANUFACTURER | MODEL |
|---|---|---|---|---|
| **12** | **FIRE SERVICES** | | | |
| 12-A | RPDCA | Reduced Pressure Backflow Device as Approved by State of CA Department of Public Health Services | Ames,<br>Febco,<br>Watts,<br>Wilkins/Zurnm or any on the DPHS (USC) List | |
| 12-B | Combo Fire & Domestic | | Performance Meter | Super Unld. |
| 12-C | Residential Fire Service Meter | Fire Service Meter for Installations Requiring Sprinklers | Performance Meter (Multi-Jet) | PMF |
| 12-D | Fire Service Meter Fitting | Residential Fire Service Y-Fitting with Lockout Valve on Domestic Side Only | Mars | 070905WH |
| | | | | |
| **13** | **MISCELLANEOUS** | | | |
| 13-A | Bolts | Grade 5 or 325-A | TRIPAC or Approved Equal | Grade 5 or 325 A |
| 13-B | Meter Bushing | 1" x 1-1/4" Thread Size | Mueller,<br>A.Y. McDonald | 10J34 |
| 13-C | Water Meter | 1" & 2" Meters Multi-Jet, 3" and Larger meters Super Unleaded Turbine Meter (All Require Radio Read w Net Radio AMR Readout in 100 Cu. Ft.) | Performance Meter | |
| 13-D | Steel Pedestal | Steel Pedestal Pipe Support Under Each Meter or As Directed By Inspector | Pipeline Products, or Approved Equal | PSG Series |
| 13-E | Bond Breaker | 8 MIL. Poly Wrap for concrete to fitting seperation | | |
| 13-F | Valve Cover | 8" O.D. Cast Iron W/1" 'VWD' Cast Thereon For Water Line | South Bay Foundry or Approved Equal | |
| 13-G | Valve Slip Can | Steel Slip Can to fit Cover 8"x18", or approved equal (One Only) | R.K. Industries or Approved Equal | |
| 13-H | Valve Can Tube | SDR 35 or Approved Equal | | |
| 13-I | Valve Stem Extension | Steel, Welded Construction, Hot Dipped Galvanized w/Top Centering Ring and 2" Operating Nut or Approved Equal | Pipeline Products,<br>South Bay Foundry,<br>Christy's | SX-900<br>E4160 |
| 13-J | Mastic Material | Corrosion Prevention Coating | Northtown Products or Approved Equal | |
| 13-K | Breakaway Bolts | Zinc Plated Breakaway Flange Bolts | TRIPAC or Approved Equal | |

# DRAWING INDEX


W-01 TYPICAL SERVICE INSTALLATION FOR 3/4" AND 1" METERS 2
W-02 BLANK INTENTIONALLY 2
W-03 TYPICAL SERVICE INSTALLATION FOR 1-1/2" AND 2" METERS
W-04 3" DOMESTIC SERVICE (2 SHEETS) 2
W-05 4" DOMESTIC SERVICE (2 SHEETS) 2
W-06 6" DOMESTIC SERVICE IN VAULT (2 SHEETS) 2
W-07 BLANK INTENTIONALLY 2
W-08 BLANK INTENTIONALLY 2
W-09 BLANK INTENTIONALLY 2
W-10 METER BOX PLACEMENT
W-11 STANDARD FIRE HYDRANT 2
W-12 BLOW-OFF FIRE HYDRANT 2
W-13 TYPICAL FIRE HYDRANT PAVEMENT MARKER INSTALLATION
W-14 PHASE BREAK END 2
W-15 TEMPORARY BLOW-OFF ASSEMBLY, 2" 2
W-16 4" BLOW-OFF ASSEMBLY 2
W-17 6" BLOW-OFF ASSEMBLY 2
W-18 VALVE CAN ASSEMBLY 2
W-19 VALVE OPERATOR EXTENSION 2
W-20 TYPICAL BUTTERFLY VALVE OPERATOR LOCATIONS
W-21 HOT TAP DETAIL - AC, PVC, DIP 2
W-22 TAPPING OUTLET - FOR STEEL PIPE
W-23 WELDED STEEL PIPE BUTT-JOINT WITH HANDHOLE
W-24 STANDARD 1" AIR AND VACUUM RELEASE VALVE ASSEMBLY 2
W-25 STANDARD 2" AIR AND VACUUM RELEASE VALVE ASSEMBLY 2
W-26 STANDARD 4" AIR AND VACUUM RELEASE VALVE ASSEMBLY 2
W-27 AIR & VACUUM VALVE ENCLOSURE
W-28 FIRE SERVICE - REDUCED PRESSURE DETECTOR ASSEMBLY
W-29 BLANK INTENTIONALLY 2
W-30 3" AND LARGER - REDUCED PRESSURE BACKFLOW DEVICE INSTALLATION 2
W-31 LMAD BACKFLOW DEVICE INSTALLATION 2
W-32 BLANK INTENTIONALLY 2
W-33 VAULT AND LID 2
W-34 SEPARATION CRITERIA FOR EXISTING WATER MAINS FROM NEW SANITARY SEWERS OR STORM DRAINS
W-35 SEPARATION CRITERIA FOR NEW WATER MAINS FROM EXISTING SANITARY SEWERS OR STORM DRAINS
W-36 TYPICAL TRENCH BACKFILL SCHEMATIC 2
W-37 CML&C STEEL PIPE / SEWER AND STORM DRAIN UNDERCROSSING 2
W-38 STEEL SLEEVE / SEWER AND STORM DRAIN UNDERCROSSING 2
W-39 2" AND SMALLER - REDUCED PRESSURE BACKFLOW DEVICE INSTALLATION 2
W-40 MINIMUM PROTECTION FOR FILLING WATER TRUCKS 2
W-41 CUTTING AND PLUGGING ABANDONED WATER MAINS
W-42 GUARD POST 2


| CITY OF VICTORVILLE - ENGINEERING DEPARTMENT | | | | |
|---|---|---|---|---|
| REV. | DATE | BY | WATER STANDARD DRAWINGS | W - INDEX |
| 2 | 7/24/14 | STAFF | | |
| 1 | 8/20/08 | STAFF | BRIAN W. GENGLER, CITY ENGINEER | SHEET 1 OF 1 |

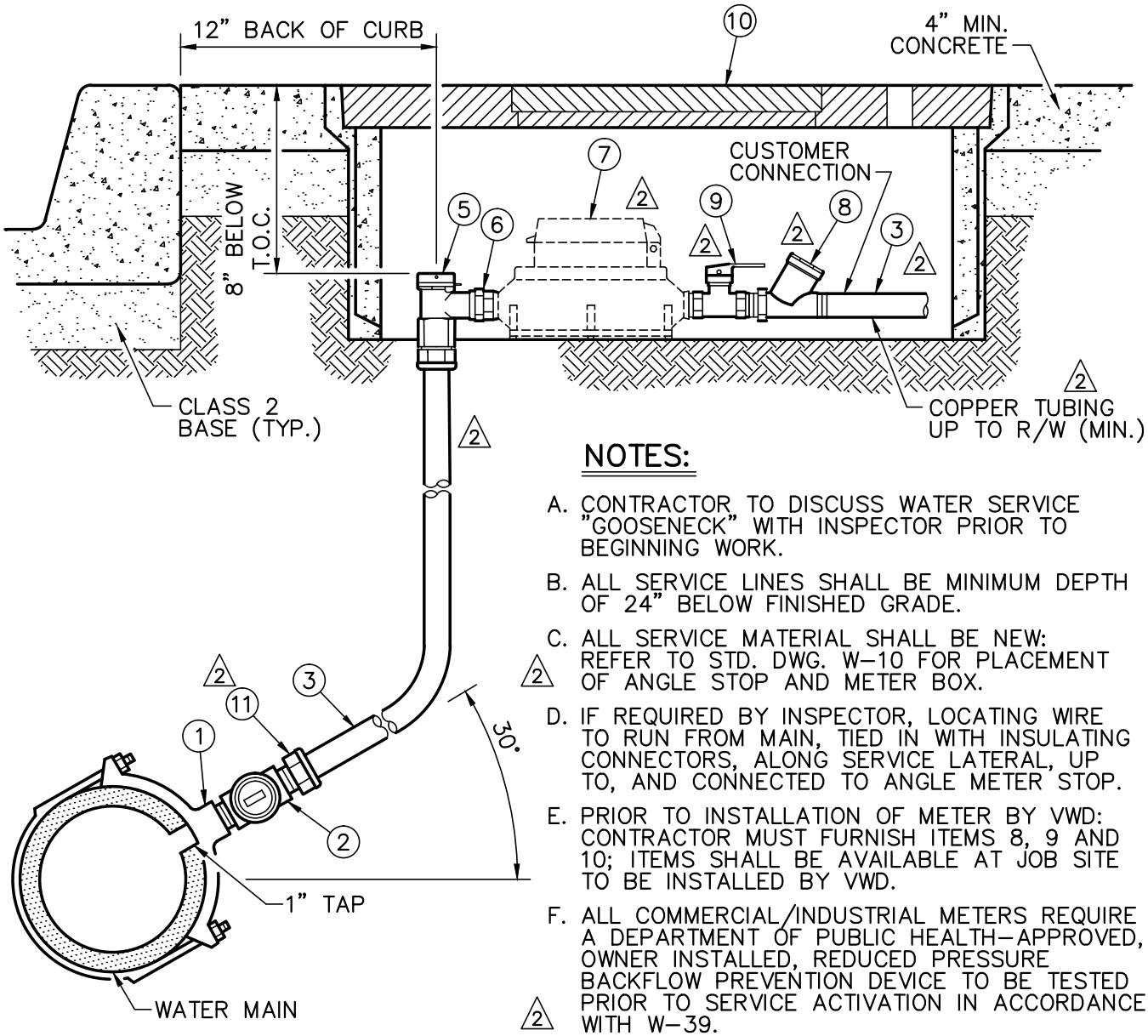


## NOTES:

A. CONTRACTOR TO DISCUSS WATER SERVICE "GOOSENECK" WITH INSPECTOR PRIOR TO BEGINNING WORK.

B. ALL SERVICE LINES SHALL BE MINIMUM DEPTH OF 24" BELOW FINISHED GRADE.

C. ALL SERVICE MATERIAL SHALL BE NEW: REFER TO STD. DWG. W-10 FOR PLACEMENT OF ANGLE STOP AND METER BOX. 2

D. IF REQUIRED BY INSPECTOR, LOCATING WIRE TO RUN FROM MAIN, TIED IN WITH INSULATING CONNECTORS, ALONG SERVICE LATERAL, UP TO, AND CONNECTED TO ANGLE METER STOP.

E. PRIOR TO INSTALLATION OF METER BY VWD: CONTRACTOR MUST FURNISH ITEMS 8, 9 AND 10; ITEMS SHALL BE AVAILABLE AT JOB SITE TO BE INSTALLED BY VWD.

F. ALL COMMERCIAL/INDUSTRIAL METERS REQUIRE A DEPARTMENT OF PUBLIC HEALTH-APPROVED, OWNER INSTALLED, REDUCED PRESSURE BACKFLOW PREVENTION DEVICE TO BE TESTED PRIOR TO SERVICE ACTIVATION IN ACCORDANCE WITH W-39. 2

| ITEM | DESCRIPTION | APPROVED MATERIAL LIST NUMBER |
|---|---|---|
| 1 | "MAIN SIZE" x 1" SERVICE SADDLE | 7-B |
| 2 | 1" CORP. STOP (MIP x MIP) 2 | 2-C |
| 3 | 1" SERVICE LATERAL (LENGTH VARIES) | 1-D |
| 4 | NOT REQUIRED 2 | |
| 5 | 1" x 1" ANGLE METER STOP | 2-E |
| 6 | 3/4" x 1" METER BUSHING (NOT REQUIRED ON 1" METERS) 2 | 13-B |
| 7 | METER (FURNISHED AND INSTALLED BY VWD) | 13-C |
| 8 | 3/4" SINGLE SPRING CHECK VALVE (FOR 3/4" METER) OR 1" SINGLE SPRING CHECK VALVE (FOR 1" METER) | 2-H |
| 9 | 3/4" BALL VALVE (FOR 3/4" METER) OR 1" BALL VALVE (FOR 1" METER) | 2-I |
| 10 | METER BOX | 9-D |
| 11 | 1" COUPLING ADAPTER (FIP X COMPRESSION) 2 | 6-A |

**CITY OF VICTORVILLE - ENGINEERING DEPARTMENT**

| REV. | DATE | BY | TYPICAL SERVICE INSTALLATION FOR 3/4" AND 1" METERS | W-01 |
|---|---|---|---|---|
| 2 | 3/12/15 | STAFF | | |
| 1 | 10/16/08 | STAFF | BRIAN W. GENGLER, CITY ENGINEER | SHEET 1 OF 1 |

# BLANK INTENTIONALLY

| CITY OF VICTORVILLE - ENGINEERING DEPARTMENT | | | | |
|---|---|---|---|---|
| REV. | DATE | BY | **BLANK INTENTIONALLY** | **W-02** |
| 2 | 7/2/14 | STAFF | | |
| 1 | 7/10/08 | STAFF | BRIAN W. GENGLER, CITY ENGINEER | SHEET 1 OF 1 |

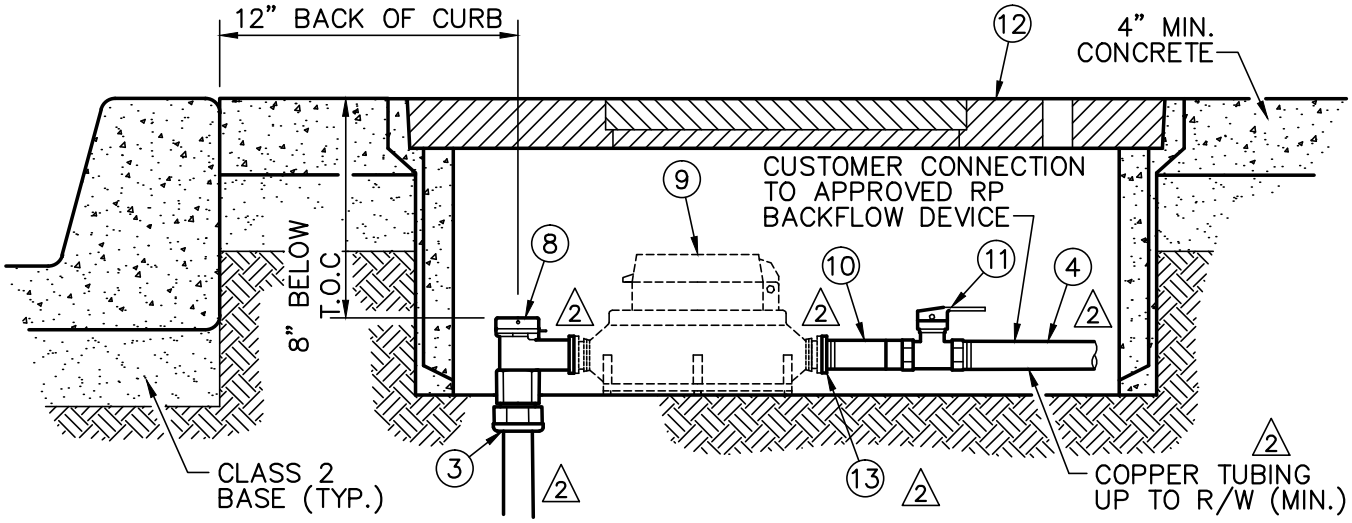


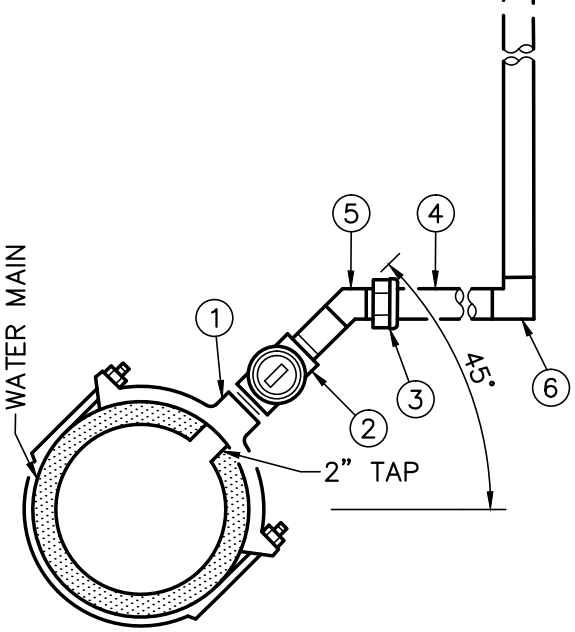


## NOTES:

A. ALL SERVICE LINES SHALL BE MINIMUM DEPTH OF 24" BELOW FINISHED GRADE.

B. ALL SERVICE MATERIAL SHALL BE NEW; REFER TO VWD STD. DWG. W-10 FOR PLACEMENT OF ANGLE STOP AND METER BOX.

C. IF REQUIRED BY INSPECTOR, LOCATING WIRE TO RUN FROM MAIN, TIED IN WITH INSULATING CONNECTORS, ALONG SERVICE LATERAL, UP TO, AND CONNECTED TO ANGLE METER STOP.

D. PRIOR TO INSTALLATION OF METER BY VWD: CONTRACTOR MUST FURNISH ITEMS 10, 11, 12 AND 13; ITEMS SHALL BE AVAILABLE AT JOB SITE TO BE INSTALLED BY VWD. 2

E. ALL METERS REQUIRE A DEPARTMENT OF PUBLIC HEALTH-APPROVED, OWNER INSTALLED, REDUCED PRESSURE BACKFLOW PREVENTION DEVICE IN ACCORDANCE WITH W-39, TO BE TESTED PRIOR TO SERVICE ACTIVATION. 2

| ITEM | DESCRIPTION | APPROVED MATERIAL LIST NUMBER |
|---|---|---|
| 1 | "MAIN SIZE" x 2" SERVICE SADDLE | 7-B |
| 2 | 2" CORP. STOP (MIP x MIP) | 2-D |
| 3 | 2" COUPLING ADAPTOR (MIP x COMPRESSION) 2 | 6-D |
| 4 | 2" SERVICE LATERAL (LENGTH VARIES) | 1-D |
| 5 | 2" - 45° FITTING (SOLDER) (FIP x FIP) (BRASS) | 6-D |
| 6 | 2" - 90° ELBOW (SOLDER) | 6-D |
| 7 | NOT REQUIRED 2 | |
| 8 | 2" ANGLE METER STOP (COMPRESSION x FLG) 2 | 2-F |
| 9 | METER (FURNISHED AND INSTALLED BY VWD) 2 | 13-C |
| 10 | 1 1/2" NIPPLE (FOR 1 1/2" METER) OR 2" NIPPLE (FOR 2" METER) 2 | 6-D |
| 11 | 1 1/2" BALL VALVE (FOR 1 1/2" METER) OR 2" BALL VALVE (FOR 2" METER) 2 | 2-I |
| 12 | METER BOX | 9-E |
| 13 | 1 1/2" FLANGE ADAPTOR (FLG x FIP) OR 2" FLANGE ADAPTOR (FLG x FIP) 2 | 6-D |

**CITY OF VICTORVILLE - ENGINEERING DEPARTMENT**

| REV. | DATE | BY | TYPICAL SERVICE INSTALLATION FOR 1 1/2" AND 2" METERS | W-03 |
|---|---|---|---|---|
| 2 | 3/12/15 | STAFF | | |
| 1 | 10/16/08 | STAFF | BRIAN W. GENGLER, CITY ENGINEER | SHEET 1 OF 1 |

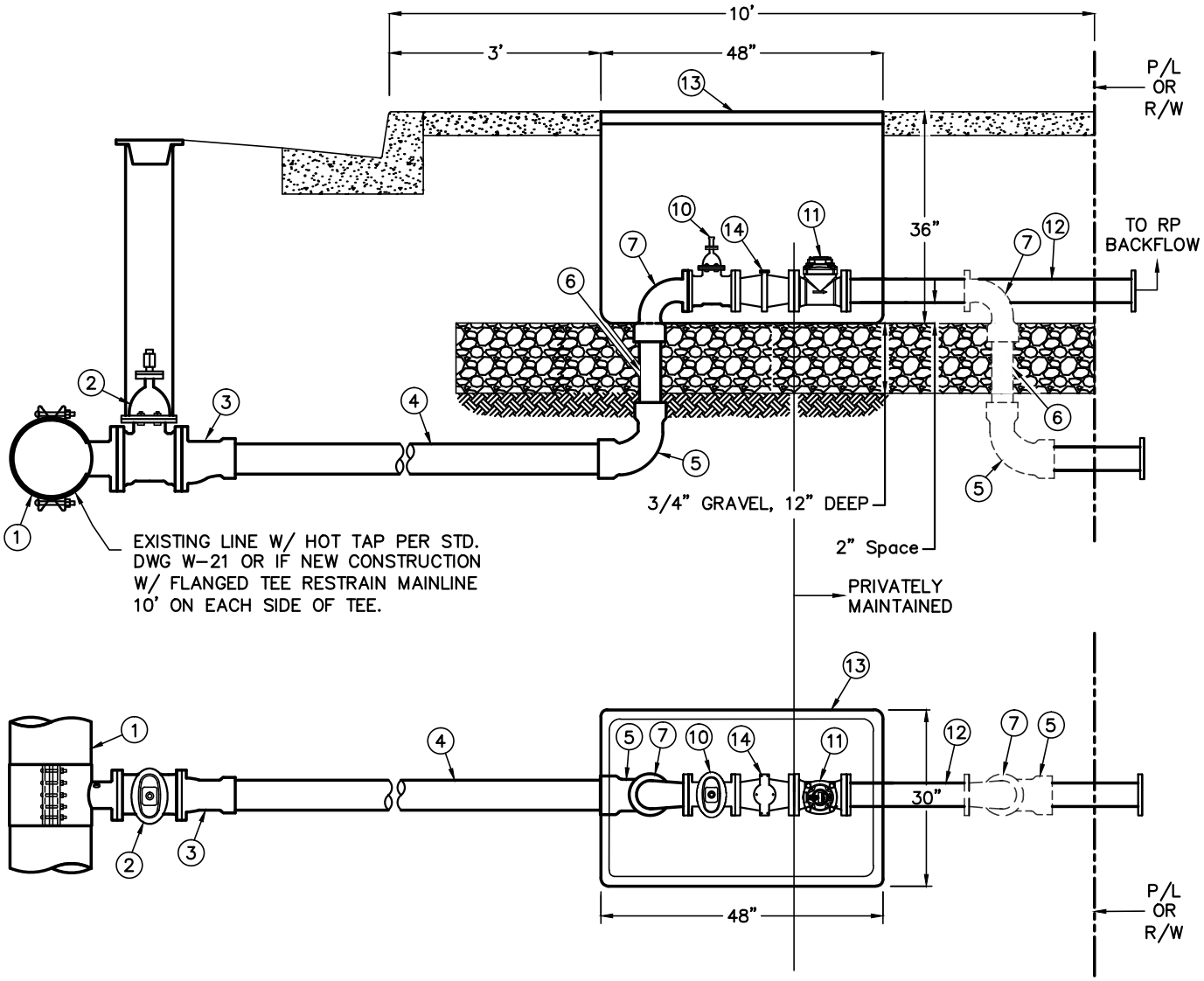


## NOTES:

A. **ALL JOINTS TO BE RESTRAINED.** (SEE ITEM 5 OF APPROVED MATERIALS LIST) 2

B. SEE SHEET 2 OF 2 FOR CONSTRUCTION NOTES. #

| CITY OF VICTORVILLE - ENGINEERING DEPARTMENT | | | | |
|---|---|---|---|---|
| REV. | DATE | BY | **3" DOMESTIC SERVICE** | **W-04** |
| 2 | 9/18/14 | STAFF | | |
| 1 | 10/16/08 | STAFF | BRIAN W GENGLER, CITY ENGINEER | SHEET 1 OF 2 |

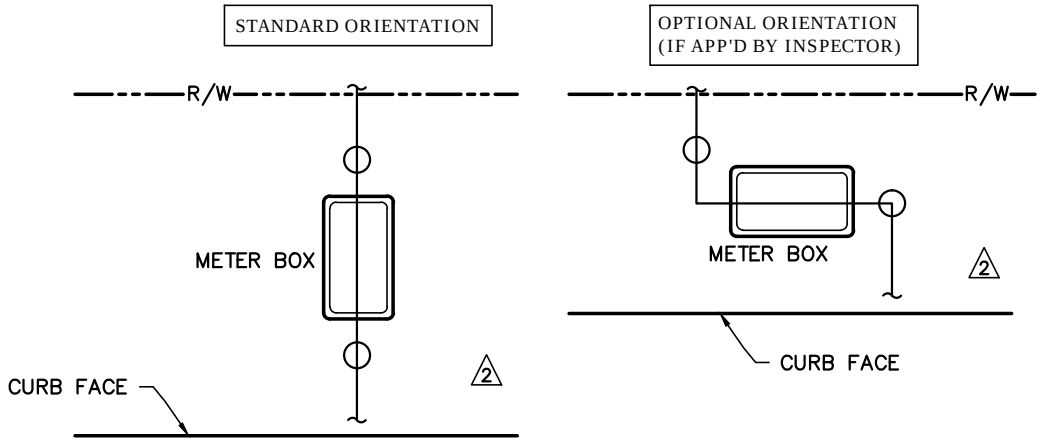


2

## CONSTRUCTION NOTES

| ITEM | DESCRIPTION | APPROVED MATERIAL LIST NUMBER |
|---|---|---|
| 1 | 6" TAPPING SLEEVE | 7–A |
| 2 | 6" GATE VALVE (FL x FL) W/ VALVE CAN ASSEMBLY | 2–B |
| 3 | 6" x 4" ECCENTRIC REDUCER (FL X MJ), INSTALL WITH TOP LEVEL | 6–C |
| 4 | 4" DIP PIPE | 1–C |
| 5 | 4" – 3" REDUCING 90° BEND (MJ) | 6–C |
| 6 | 3" PE SPOOL, CUT TO FIT | 6–E |
| 7 | 3" 90° BEND (MJ x FL) GRIP RING PACK | 6–C |
| 8 | NOT REQUIRED | |
| 9 | NOT REQUIRED | |
| 10 | 3" FL x FL GATE VALVE W/ OPERATING NUT | 2–B |
| 11 | 3" OCTAVE METER | 13–C |
| 12 | 3" FL SPOOL | 6–E |
| 13 | #8 METER BOX LID + COVER | 9–E |
| 14 | 3" STRAINER | 13–L |

**CITY OF VICTORVILLE - ENGINEERING DEPARTMENT**

| REV. | DATE | BY | | |
|---|---|---|---|---|
| 2 | 9/18/14 | STAFF | **3" DOMESTIC SERVICE** | **W-04** |
| 1 | 8/13/08 | STAFF | BRIAN W GENGLER, CITY ENGINEER | SHEET 2 OF 2 |

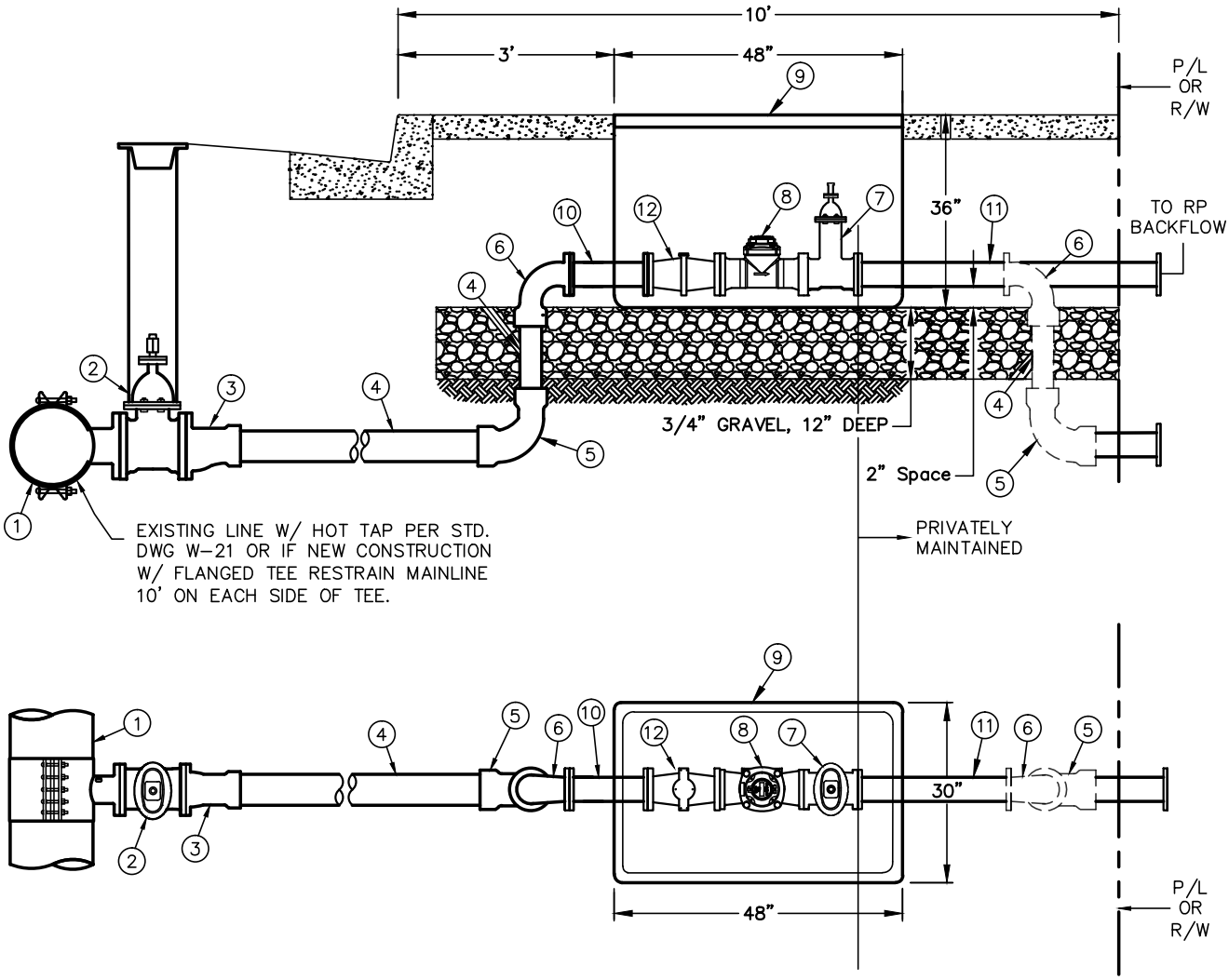


## NOTES:

A. IF CONNECTING TO A 6" MAIN LINE, THE CITY MAY REQUIRE AN AIR VAC TO BE INSTALLED ON METER ASSEMBLY. SEE STD. DWG. W-24 FOR DETAIL. (2)

B. ANY PENETRATIONS THROUGH VAULT SHALL BE DRY PACKED. (2)

C. RESTRAIN ALL JOINTS. (SEE ITEM 5 ON APPROVED MATERIALS LIST) (2)

D. IF ANY PART OF THIS ASSEMBLY IS OUTSIDE THE PUBLIC RIGHT-OF-WAY, OWNER MUST DEDICATE TO VWD A 5' EASEMENT ON ALL SIDES.

E. SEE SHEET 2 OF 2 FOR CONSTRUCTION NOTES. (#)

| CITY OF VICTORVILLE - ENGINEERING DEPARTMENT | | | | |
|---|---|---|---|---|
| REV. | DATE | BY | 4" DOMESTIC SERVICE | W-05 |
| 2 | 9/18/14 | STAFF | | |
| 1 | 10/16/08 | STAFF | BRIAN W GENGLER, CITY ENGINEER | SHEET 1 OF 2 |

STANDARD ORIENTATION

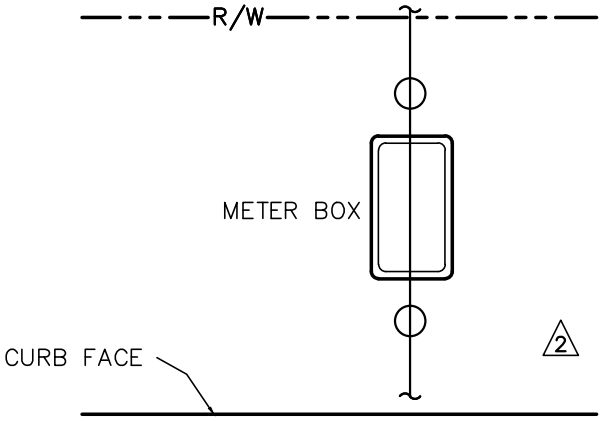


OPTIONAL ORIENTATION
(IF APP'D BY INSPECTOR)

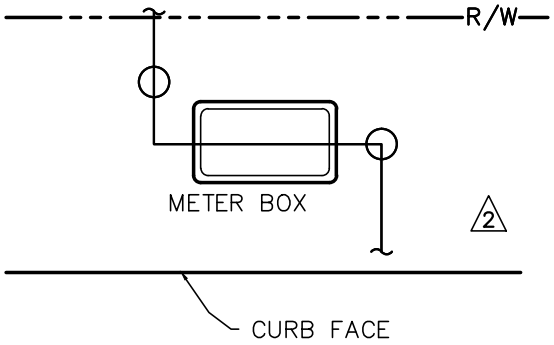


2

## CONSTRUCTION NOTES

| ITEM | DESCRIPTION | APPROVED MATERIAL LIST NUMBER |
|---|---|---|
| 1 | 6" TAPPING SLEEVE | 7–A |
| 2 | 6" GATE VALVE (FL x FL) W/ VALVE CAN ASSEMBLY | 2–B |
| 3 | 6" x 4" ECCENTRIC REDUCER (INSTALL WITH TOP LEVEL) | 6–C |
| 4 | 4" DIP PIPE | 1–C |
| 5 | 4" MJ x MJ 90° BEND | 6–C |
| 6 | 4" 90° BEND (MJ x FL) GRIP RING PACK | 6–C |
| 7 | 4" FL x FL GATE VALVE W/ OPERATING NUT | 2–B |
| 8 | 4" OCTAVE METER | 13–C |
| 9 | #8 METER BOX LID & COVER | 9–E |
| 10 | 4" x 13" FL x FL SPOOL | 6–E |
| 11 | 4" FL SPOOL | 6–E |
| 12 | 4" STRAINER | 13–L |

**CITY OF VICTORVILLE - ENGINEERING DEPARTMENT**

| REV. | DATE | BY | | |
|---|---|---|---|---|
| 2 | 9/18/14 | STAFF | **4" DOMESTIC SERVICE** | **W-05** |
| 1 | 8/13/08 | STAFF | BRIAN W. GENGLER, CITY ENGINEER | SHEET 2 OF 2 |

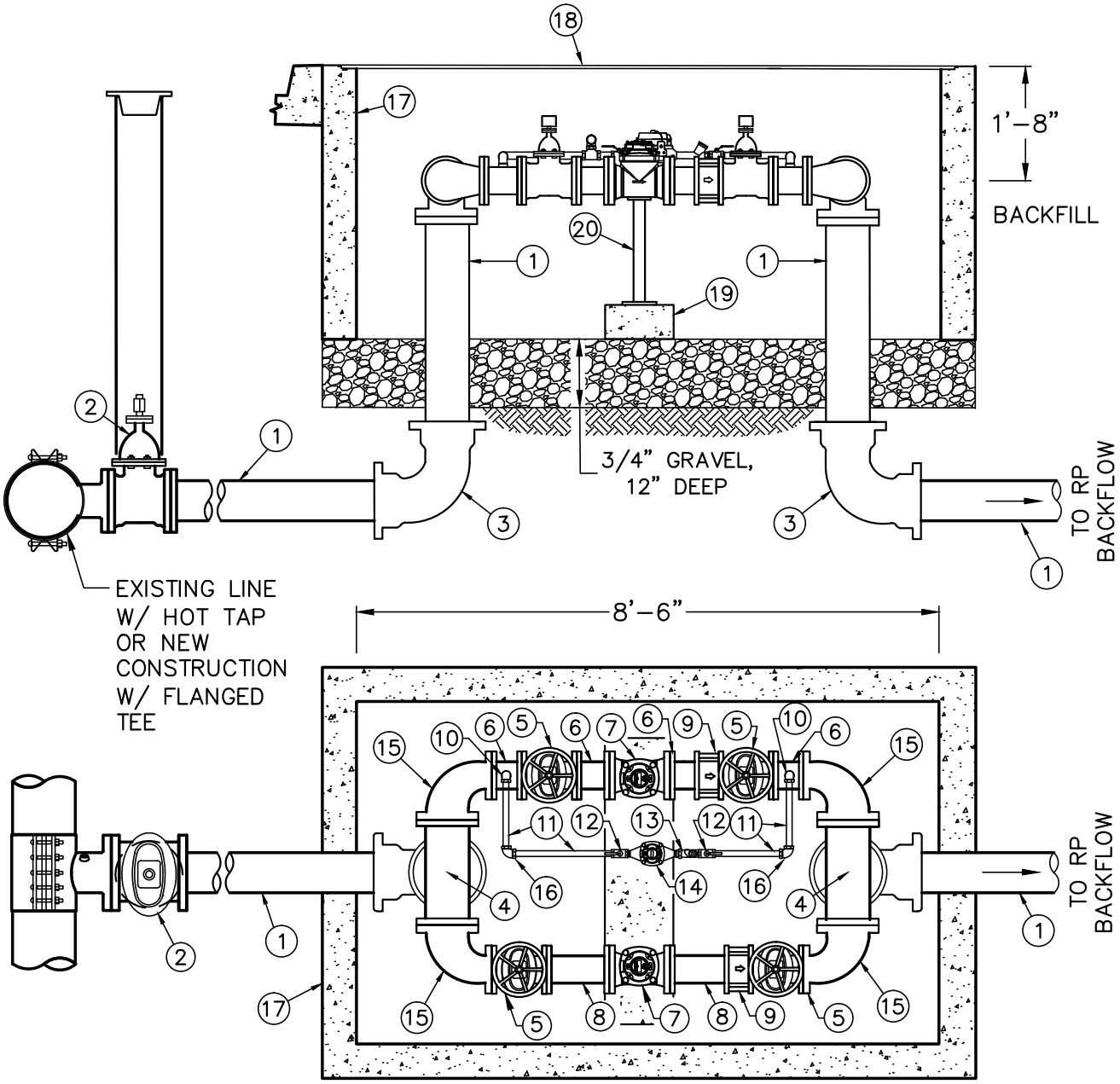


## NOTES:

A. IF CONNECTING TO A 6" MAIN LINE, DEVELOPER SHALL INSTALL AN AIR VAC ON METER ASSEMBLY. SEE STD. DWG. W–24 FOR DETAIL.

B. SPOOL PENETRATIONS THROUGH VAULT SHALL BE DRY PACKED.

C. RESTRAIN ALL JOINTS. (SEE ITEM 5 OF APPROVED MATERIALS LIST)

D. IF ANY PART OF THIS ASSEMBLY IS OUTSIDE THE PUBLIC RIGHT–OF–WAY, OWNER MUST DEDICATE TO VWD A 5' EASEMENT ON ALL SIDES.

E. SEE SHEET 2 OF 2 FOR CONSTRUCTION NOTES. (#)

| CITY OF VICTORVILLE - ENGINEERING DEPARTMENT | | | | |
|---|---|---|---|---|
| REV. | DATE | BY | **6" DOMESTIC SERVICE IN VAULT** | **W-06** |
| 2 | 12/18/14 | STAFF | | |
| 1 | 10/16/08 | STAFF | BRIAN W. GANGLER, CITY ENGINEER | SHEET 1 OF 2 |

STANDARD ORIENTATION

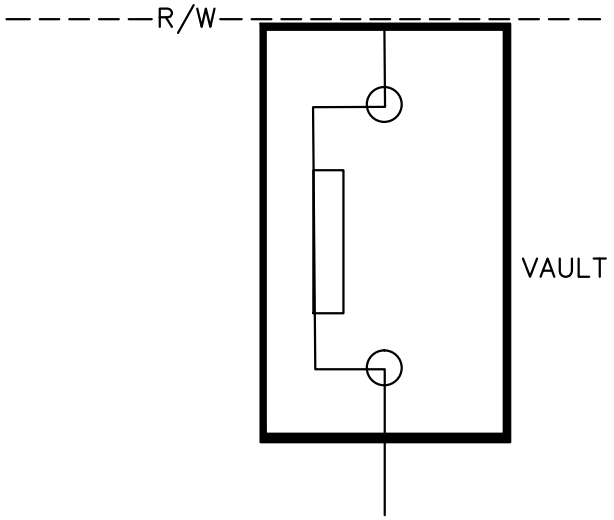


OPTIONAL ORIENTATION
(IF APP'D BY INSPECTOR)

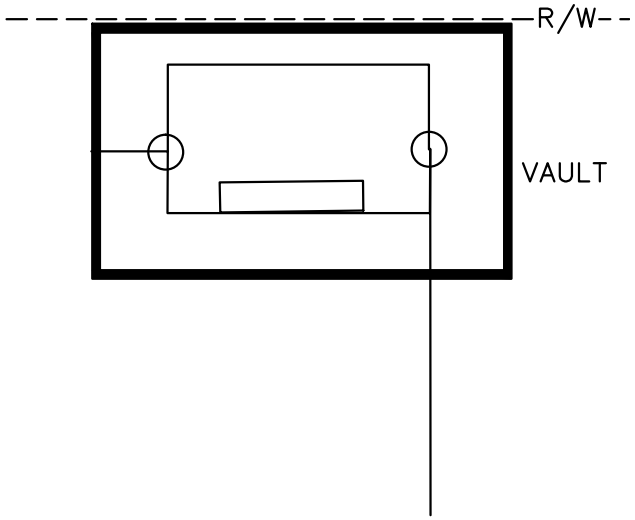


## CONSTRUCTION NOTES

| ITEM | DESCRIPTION | APPROVED MATERIAL LIST NUMBER |
|---|---|---|
| 1 | 6" CLASS 350 DUCTILE IRON, CUT TO FIT | 1–C |
| 2 | 6" GATE VALVE (FL x MJ) W/ VALVE CAN ASSEMBLY | 2–B |
| 3 | 6" MJ x MJ 90° BEND | 6–C |
| 4 | 6" FL x FL x FL TEE, TURNED DOWNWARD | 6–B |
| 5 | 4'' GATE VALVE (FL x FL) W/ HANDWHEEL NRS | 2–B |
| 6 | 4" ø x 6" (FL x FL) SPOOL, W/ 1" THREADED TAP | 6–E |
| 7 | 4" METER | 13–C |
| 8 | 4" ø x 12" (FL x FL) SPOOL | 6–E |
| 9 | 4" WAFER CHECK VALVE | 2–J |
| 10 | 1" 90° BEND, (FIP x MIP) | 6–D |
| 11 | 1" TUBING, CUT TO FIT | 1–D |
| 12 | 1" BALL VALVE (FIP x FIP) | 2–I |
| 13 | 1" CHECK VALVE | 2–H |
| 14 | 1" METER | 13–C |
| 15 | 6" x 4" REDUCING 90° BEND | 6–C |
| 16 | 1" 90° BEND (MIP x MIP) | 6–D |
| 17 | 60" x 102" x 36"D PRECAST CONCRETE VAULT | STD. DWG. W–33 |
| 18 | VAULT LID | STD. DWG. W–33 |
| 19 | 12"W x 27"L x 6"D CONCRETE PAD | |
| 20 | STEEL PEDESTAL PIPE SUPPORT UNDER EACH METER | 13–D |

**CITY OF VICTORVILLE - ENGINEERING DEPARTMENT**

| REV. | DATE | BY | | |
|---|---|---|---|---|
| 2 | 12/18/14 | STAFF | **6" DOMESTIC SERVICE IN VAULT** | **W-06** |
| 1 | 8/13/08 | STAFF | BRIAN W. GANGLER, CITY ENGINEER | SHEET 2 OF 2 |

# BLANK INTENTIONALLY

| CITY OF VICTORVILLE - ENGINEERING DEPARTMENT | | | | |
|---|---|---|---|---|
| REV. | DATE | BY | **BLANK INTENTIONALLY** | **W-07** |
| 2 | 7/3/14 | STAFF | | |
| 1 | 7/10/08 | STAFF | BRIAN W. GENGLER, CITY ENGINEER | SHEET 1 OF 1 |

# BLANK INTENTIONALLY

| CITY OF VICTORVILLE - ENGINEERING DEPARTMENT | | | | |
|---|---|---|---|---|
| REV. | DATE | BY | BLANK INTENTIONALLY | W-08 |
| 2 | 7/3/14 | STAFF | | |
| 1 | 7/10/08 | STAFF | BRIAN W. GENGLER, CITY ENGINEER | SHEET 1 OF 1 |

# BLANK INTENTIONALLY

| CITY OF VICTORVILLE - ENGINEERING DEPARTMENT | | | | |
|---|---|---|---|---|
| REV. | DATE | BY | **BLANK INTENTIONALLY** | **W-09** |
| 2 | 7/2/14 | STAFF | | |
| 1 | 7/10/08 | STAFF | BRIAN W. GENGLER, CITY ENGINEER | SHEET 1 OF 1 |

## NOTES:

A. ALL METER SERVICES, MUST BE INSTALLED AS SHOWN UNLESS OTHERWISE APPROVED BY THE ENGINEER.

B. PRIOR TO POURING THE SIDEWALK, THE METER BOX PLACEMENT MUST BE INSPECTED.

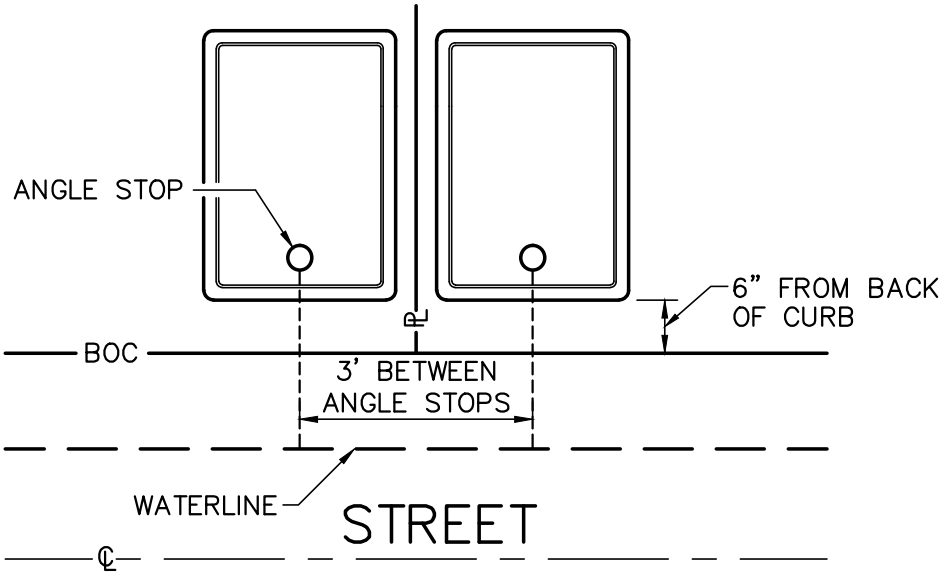


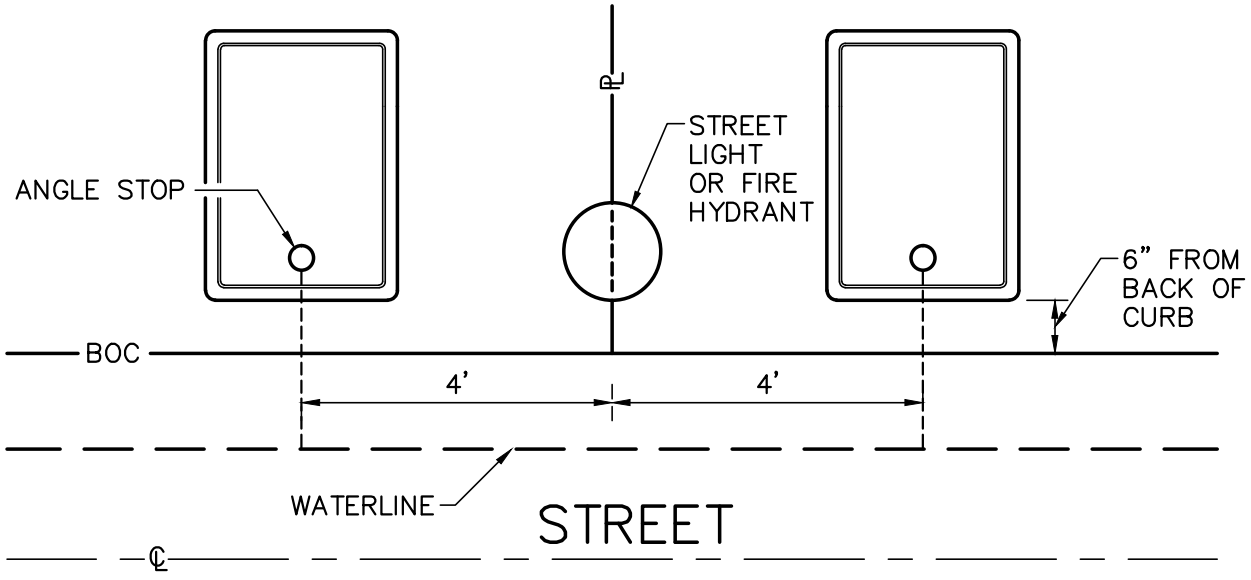


| CITY OF VICTORVILLE - ENGINEERING DEPARTMENT | | | | |
|---|---|---|---|---|
| REV. | DATE | BY | **METER BOX PLACEMENT** | **W-10** |
| 2 | 12/18/14 | STAFF | | |
| 1 | 8/13/08 | STAFF | BRIAN W. GENGLER, CITY ENGINEER | SHEET 1 OF 1 |

## NOTES:

A. ANY WATER FACILITIES IN CONTACT WITH CONCRETE REQUIRE A BOND BREAKER.

B. WEEP HOLE ON HYDRANT BARREL MUST BE CLEAR OF OBSTRUCTIONS.

C. CENTER OF HYDRANT IS TO BE PLACED AT PROPERTY LINE, OR 5 FOOT FROM BCR OR ECR, OR AS DIRECTED BY INSPECTOR.

D. HYDRANT LATERAL LENGTH IS VARIABLE – TO BE SPECIFIED ON PLAN DRAWINGS. LATERAL MUST BE INSTALLED STRAIGHT AND LEVEL, WITH NO DEFLECTION AT JOINTS ALLOWED. **ALL JOINTS TO BE RESTRAINED.** (SEE ITEM 5 OF APPROVED MATERIALS LIST) 2

E. LOCATING WIRE TO RUN FROM MAIN, (TIED IN WITH INSULATING CONNECTORS) ALONG HYDRANT LATERAL AND CONNECTED TO THE HYDRANT CAP CHAIN. 2

F. WHERE NO SIDEWALK IS TO BE CONSTRUCTED, A 3'x3'x6" CONCRETE PAD SHALL BE PROVIDED.

G. HYDRANT ASSEMBLY TO BE INSTALLED PLUMB.

H. HYDRANT SHALL BE PAINTED YELLOW (FED NO. 13655 OSHA/YELLOW, HIGH VISIBILITY)

I. HYDRANT SHALL NOT HAVE MORE THAN ONE (1) EXTENSION TO RAISE TO PROPER HEIGHT.

J. RESTRAIN MAINLINE 10' ON EACH SIDE OF HYDRANT TEE. 2

K. GUARD POSTS (PER STD. DWG. W–42) REQUIRED IF INSTALLING WHERE ACCESSIBLE TO TRAFFIC. 2

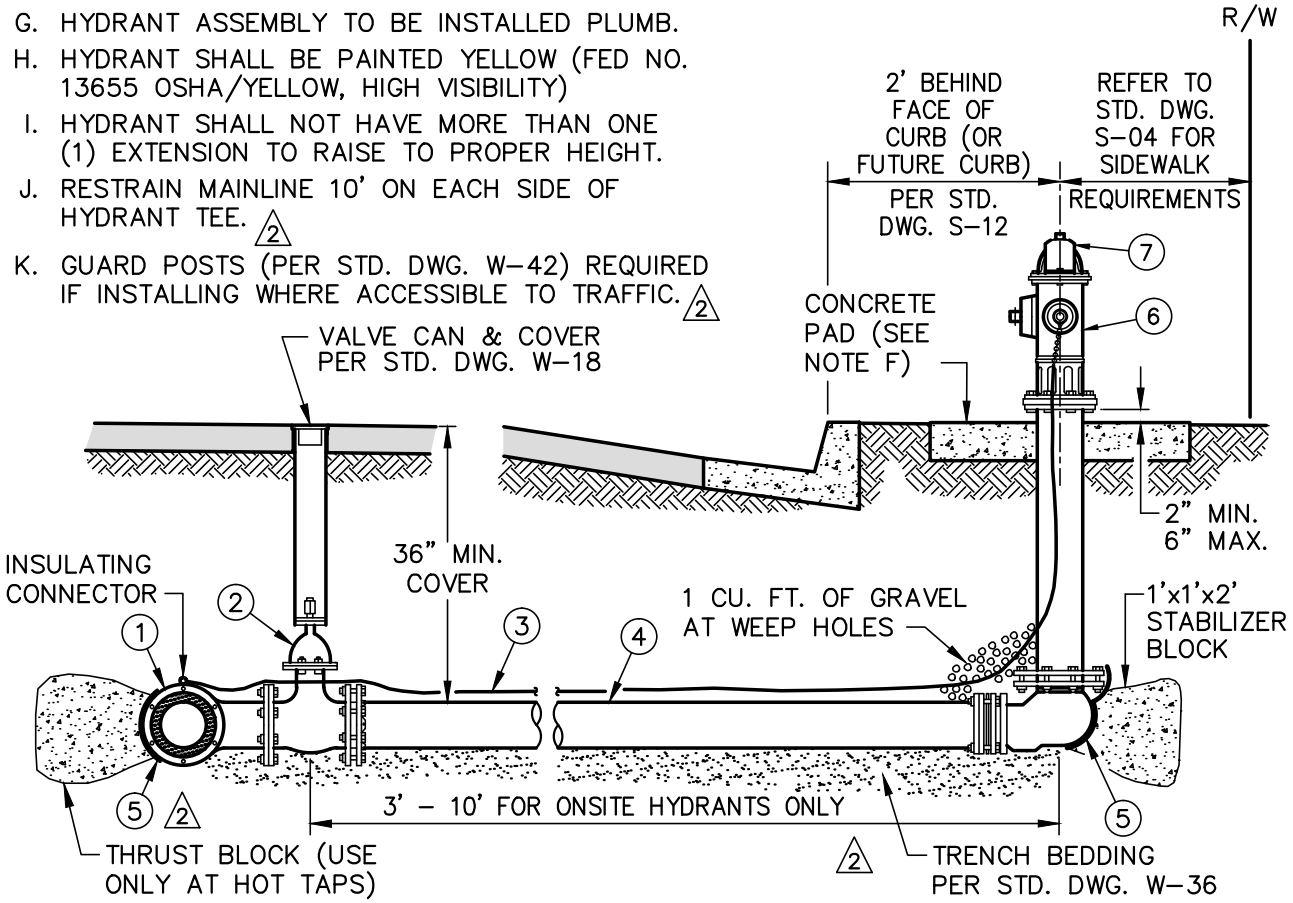


| ITEM | DESCRIPTION | APPROVED MATERIAL LIST NUMBER |
|---|---|---|
| 1 | MAIN SIZE x 6" TEE OR TAPPING SLEEVE (SEE STD. DWG. W–21) | 6–B / 7–A |
| 2 | 6" GATE VALVE (FLG'D) 2 | 2–B |
| 3 | LOCATING WIRE WITH CONNECTORS 2 | 10–A, 10–B |
| 4 | 6" PIPE | 1–A, 1–C |
| 5 | BOND BREAKER | 13–E |
| 6 | FIRE HYDRANT ASSEMBLY | 3–A |
| 7 | OPERATING NUT ANTI–THEFT DEVICE | 3–B |

**CITY OF VICTORVILLE - ENGINEERING DEPARTMENT**

| REV. | DATE | BY | | |
|---|---|---|---|---|
| 2 | 12/18/14 | STAFF | **STANDARD FIRE HYDRANT** | **W-11** |
| 1 | 8/13/08 | STAFF | BRIAN W. GENGLER, CITY ENGINEER | SHEET 1 OF 1 |

## NOTES:

A. ANY WATER FACILITIES IN CONTACT WITH CONCRETE REQUIRE A BOND BREAKER.

B. WEEP HOLE ON HYDRANT BARREL MUST BE CLEAR OF OBSTRUCTIONS.

C. CENTER OF HYDRANT IS TO BE PLACED AT PROPERTY LINE, OR 5 FOOT FROM BCR OR ECR, OR AS DIRECTED BY INSPECTOR.

D. HYDRANT LATERAL LENGTH IS VARIABLE – TO BE SPECIFIED ON PLAN DRAWINGS. LATERAL MUST BE INSTALLED STRAIGHT AND LEVEL, WITH NO DEFLECTION AT JOINTS ALLOWED. **ALL JOINTS TO BE RESTRAINED.** (SEE ITEM 5 OF APPROVED MATERIALS LIST) △2

E. LOCATING WIRE TO RUN FROM MAIN, (TIED IN WITH INSULATING CONNECTORS) ALONG HYDRANT LATERAL AND CONNECTED TO THE HYDRANT CAP CHAIN. △2

F. WHERE NO SIDEWALK IS TO BE CONSTRUCTED, A 3'x3'x6" CONCRETE PAD SHALL BE PROVIDED.

G. HYDRANT ASSEMBLY TO BE INSTALLED PLUMB.

H. HYDRANT SHALL BE PAINTED YELLOW (FED NO. 13655 OSHA/YELLOW, HIGH VISIBILITY)

I. HYDRANT SHALL NOT HAVE MORE THAN 1 EXTENSION TO RAISE TO PROPER HEIGHT.

J. IF LATERAL DEPTH IS > 6 FEET, USE (2) 90° BENDS AFTER VALVE TO RAISE – DISCUSS WITH INSPECTOR.

K. RESTRAIN MAINLINE 10' ON EACH SIDE OF HYDRANT TEE. △2

L. GUARD POSTS (PER STD. DWG. W–42) REQUIRED IF INSTALLING WHERE ACCESSIBLE TO TRAFFIC △2

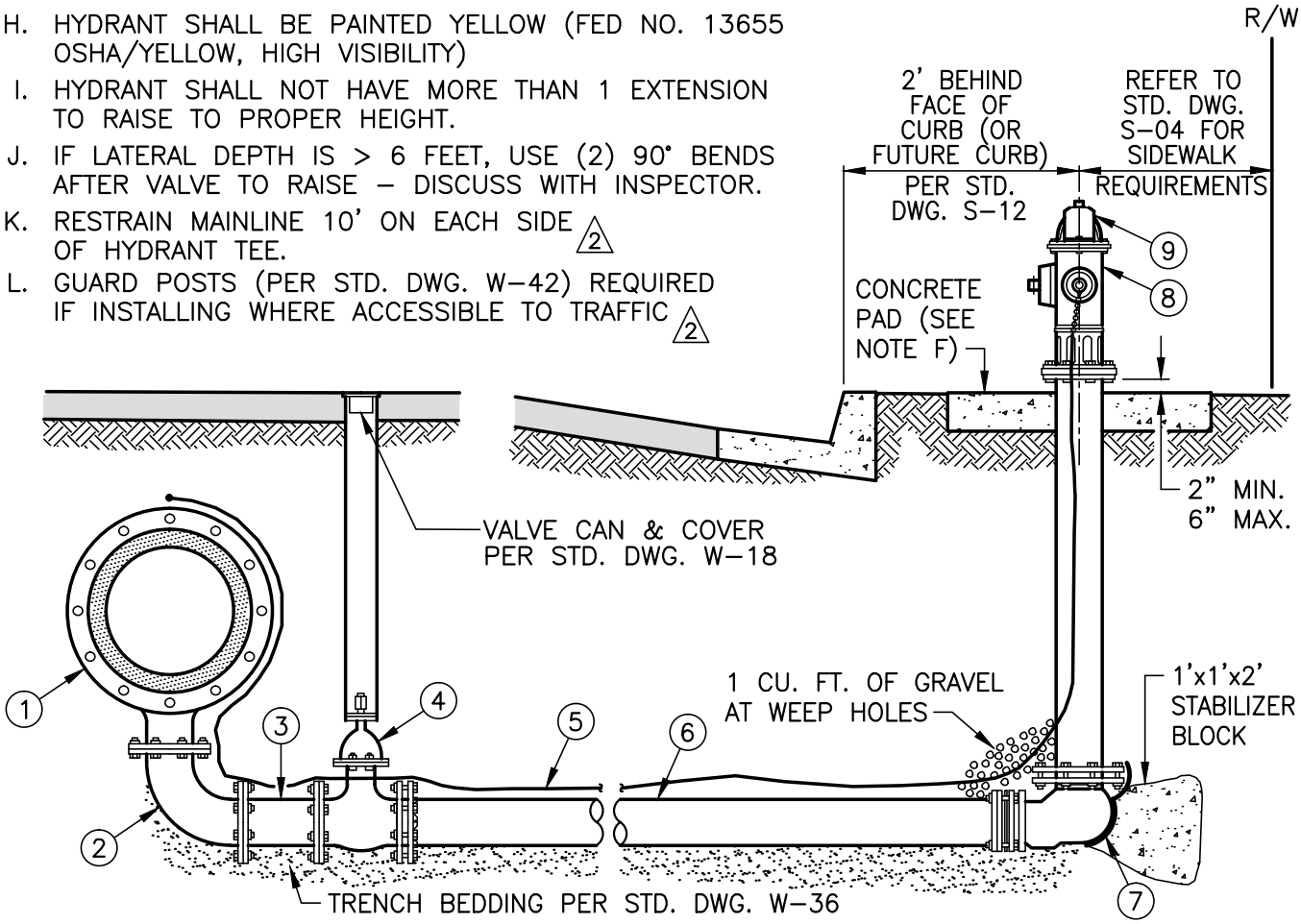


| ITEM | DESCRIPTION | APPRVD. MAT. LIST NUMBER | ITEM | DESCRIPTION | APPRVD. MAT. LIST NUMBER |
|---|---|---|---|---|---|
| 1 | MAINSIZE x 6" TEE △2 | 6–B | 6 | 6" PIPE | 1–A, C |
| 2 | 6" 90° BEND (FL x FL) △2 | 6–C | 7 | BOND BREAKER | 13–E |
| 3 | 6" SPOOL, LENGTH AS NEEDED △2 | 6–E | 8 | FIRE HYDRANT ASSEMBLY | 3–A |
| 4 | 6" GATE VALVE (FLG'D) △2 | 2–B | 9 | OPERATING NUT ANTI–THEFT DEVICE | 3–B |
| 5 | LOCATING WIRE W/ CONNECTORS | 10–A, B | 10 | JOINT RESTRAINTS △2 | 5–A, B, C |

**CITY OF VICTORVILLE - ENGINEERING DEPARTMENT**

| REV. | DATE | BY | | |
|---|---|---|---|---|
| 2 | 4/1/15 | STAFF | **BLOW-OFF FIRE HYDRANT** | **W-12** |
| 1 | 8/13/08 | STAFF | BRIAN W. GENGLER, CITY ENGINEER | SHEET 1 OF 1 |

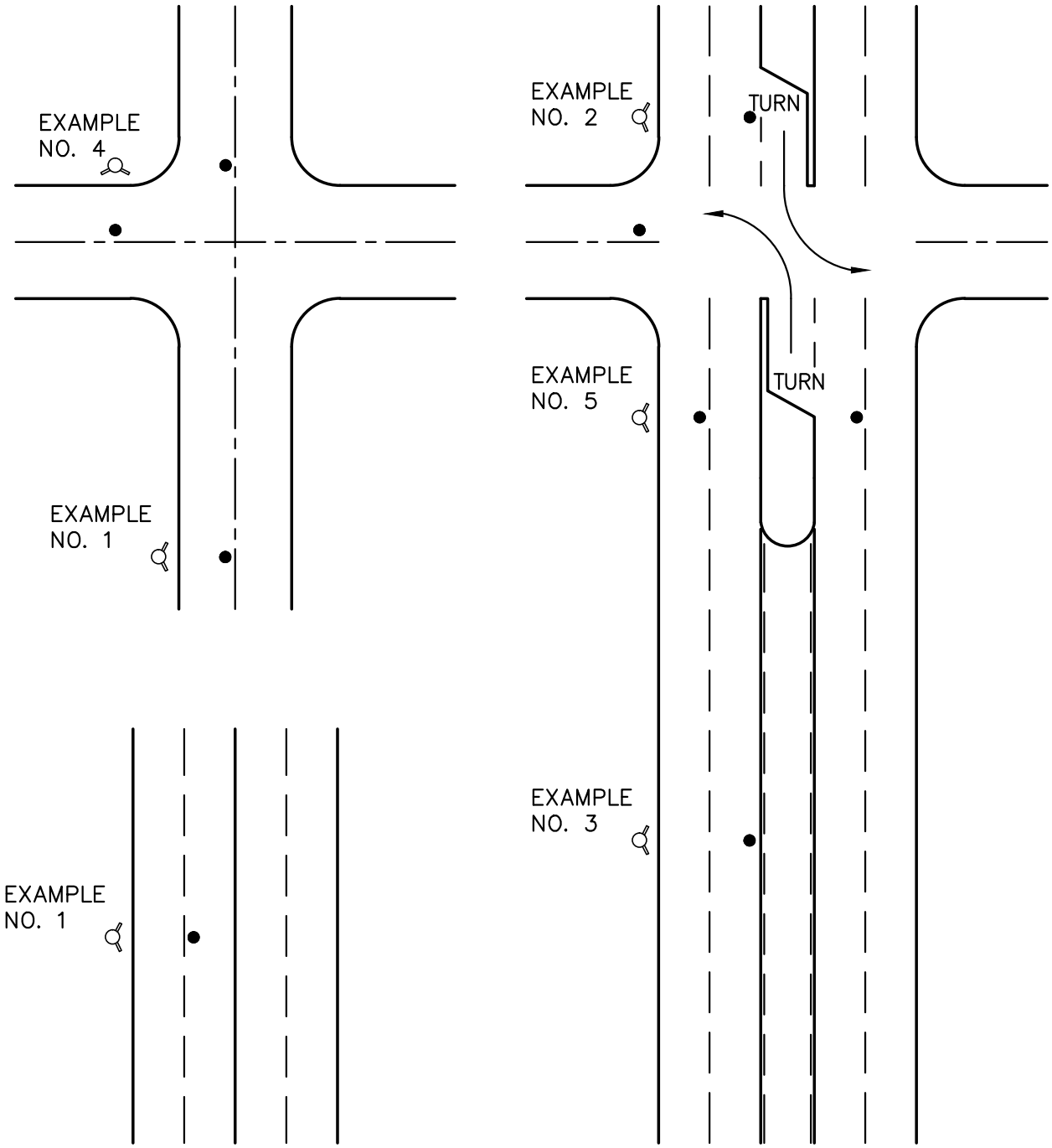


| CITY OF VICTORVILLE - ENGINEERING DEPARTMENT | | | | |
|---|---|---|---|---|
| REV. | DATE | BY | **TYPICAL FIRE HYDRANT PAVEMENT MARKER INSTALLATION** | **W-13** |
| 2 | 12/18/14 | STAFF | | |
| 1 | 8/13/08 | STAFF | BRIAN W. GENGLER, CITY ENGINEER | SHEET 1 OF 1 |

## NOTES:

A. PHASE BREAKS NOT SHOWN ON APPROVED WATER IMPROVEMENT PLANS MUST BE AUTHORIZED BY THE ENGINEER PRIOR TO INSTALLATION. AT THE DISCRETION OF THE ENGINEER, STD. DWG. W–15 MAY BE USED IN LIEU OF THE STANDARD SHOWN HEREON.

B. GUARD POSTS (PER STD. DWG. W–42) REQUIRED IF INSTALLING WHERE ACCESSIBLE TO TRAFFIC

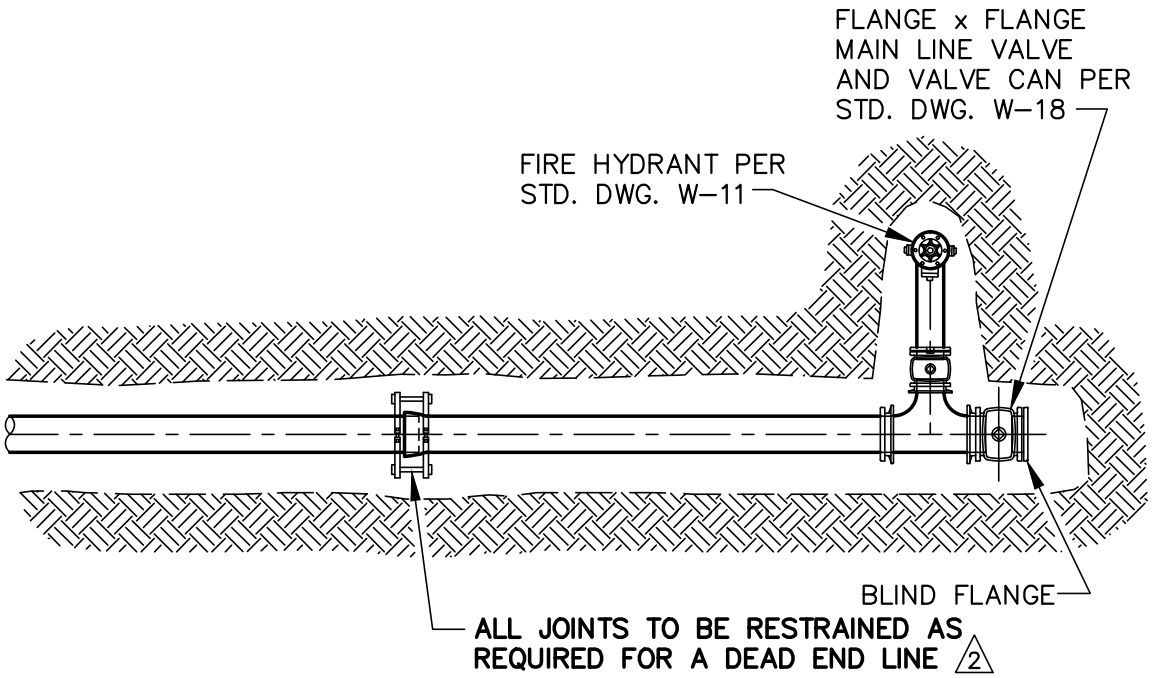


## PLAN

| ITEM | DESCRIPTION | APPROVED MATERIAL LIST NUMBER |
|---|---|---|
| 1 | JOINT RESTRAINT | 5–A, B, C |
| 2 | BLIND FLANGE | |
| | | |

| CITY OF VICTORVILLE - ENGINEERING DEPARTMENT | | | | |
|---|---|---|---|---|
| REV. | DATE | BY | **PHASE BREAK END** | **W-14** |
| 2 | 4/1/15 | STAFF | | |
| 1 | 8/13/08 | STAFF | BRIAN W. GENGLER, CITY ENGINEER | SHEET 1 OF 1 |

## NOTES:

A. ITEMS 4, 5, 6 AND 7 ARE OPTIONAL AND TO BE PROVIDED BY CONTRACTOR FOR EASE OF TESTING. THESE ITEMS SHALL BE REMOVED PRIOR TO TRENCH BACKFILL.

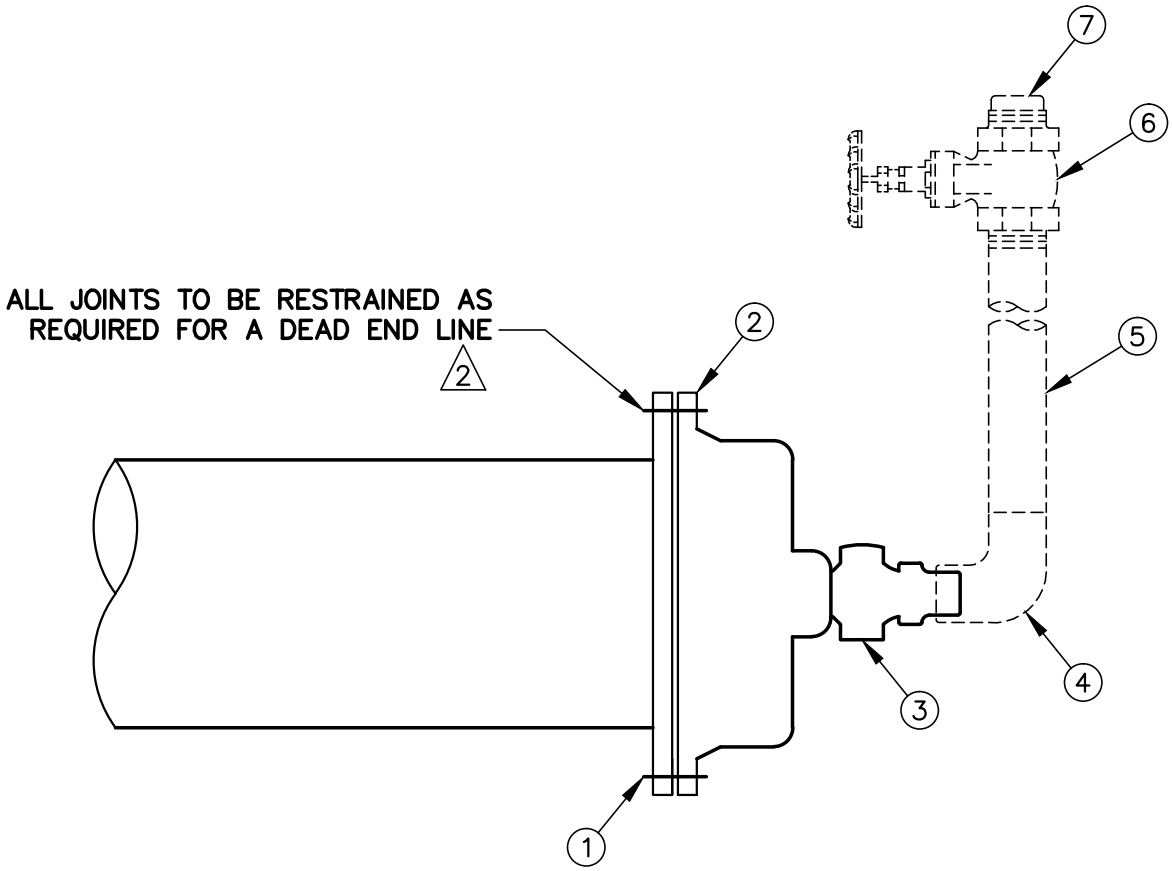


| ITEM | DESCRIPTION | APPROVED MATERIAL LIST NUMBER |
|---|---|---|
| 1 | JOINT RESTRAINT | 5–A, B, C |
| 2 | MJ CAP OR FL x MJ ADAPTOR AND BLIND FLANGE WITH 2" TAP | |
| 3 | 2" CORP STOP W/ THREADED PLUG | |
| 4 | STREET 90° BEND (BRASS) | |
| 5 | 2" NIPPLE, LENGTH AS NEEDED FOR TEMPORARY BLOW–OFF | |
| 6 | 2" BALL VALVE WITH HANDWHEEL FOR TEMPORARY BLOW–OFF | |
| 7 | 2" THREADED PLUG FOR TEMPORARY BLOW–OFF | |

**CITY OF VICTORVILLE - ENGINEERING DEPARTMENT**

| REV. | DATE | BY | | |
|---|---|---|---|---|
| 2 | 12/18/14 | STAFF | **TEMPORARY BLOW-OFF ASSEMBLY** | **W-15** |
| 1 | 8/13/08 | STAFF | BRIAN W. GENGLER, CITY ENGINEER | SHEET 1 OF 1 |

## NOTES:

A. LOCATING WIRE TO RUN FROM MAIN, (TIED IN WITH INSULATING CONNECTORS) ALONG LATERAL AND CONNECTED TO BLOW-OFF RISER. 2

B. WHERE NO SIDEWALK IS TO BE CONSTRUCTED, A 3'x3'x6" CONCRETE PAD SHALL BE PROVIDED.

C. BLOW-OFF ASSEMBLY TO BE INSTALLED PLUMB; LATERAL TO BE INSTALLED LEVEL AND STRAIGHT, (NO DEFLECTION AT JOINTS ALLOWED).

D. EXPOSED COMPONENTS SHALL BE PAINTED WHITE.

E. **ALL JOINTS TO BE RESTRAINED.** (SEE ITEM 5 OF APPROVED MATERIALS LIST) 2

F. GUARD POSTS (PER STD. DWG. W-42) REQUIRED IF INSTALLING WHERE ACCESSIBLE TO TRAFFIC 2

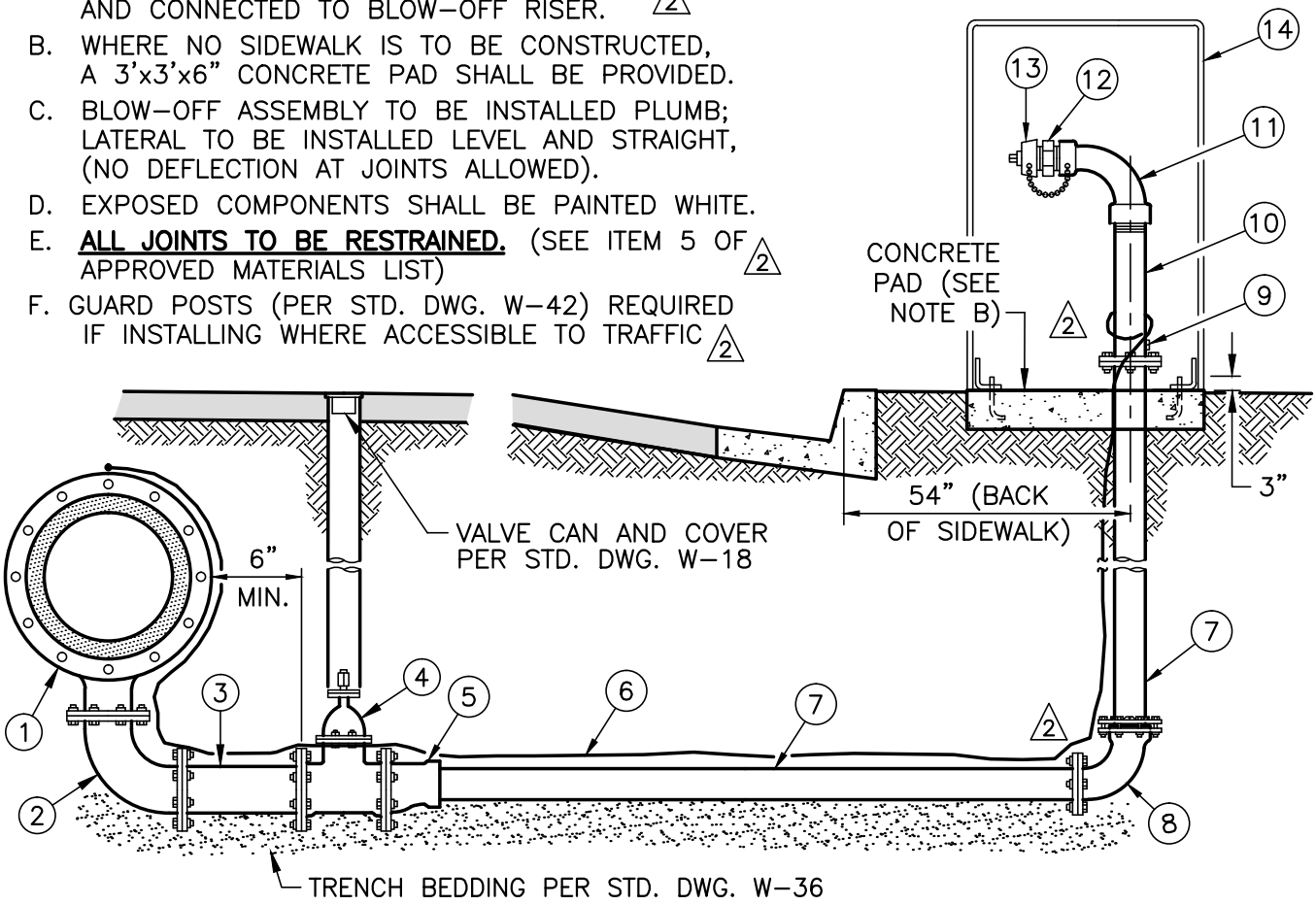


| ITEM | DESCRIPTION | APPROVED MATERIAL LIST NUMBER |
|---|---|---|
| 1 | MAINSIZE x 6" TEE | 6-B |
| 2 | 6" 90° BEND (FL) | 6-C |
| 3 | 6" SPOOL (FL), LENGTH AS NEEDED | 6-E |
| 4 | 6" GATE VALVE (FLG'D) | 2-B |
| 5 | 6" x 4" ECCENTRIC REDUCER WITH TOP LEVEL (FL x PO) 2 | 6-C |
| 6 | LOCATING WIRE WITH CONNECTORS (IF REQUIRED BY INSPECTOR) 2 | 10-A, 10-B |
| 7 | 4" PIPE, LENGTH AS NEEDED 2 | 1-A, 1-C |
| 8 | 4" 90° BEND (FL x MJ) 2 | 6-C |
| 9 | 1/2" THREADED HOLE WITH PLUG | |
| 10 | 4" #10 GALVANIZED STEEL, 18" LONG (MIPT x FL) | 1-G |
| 11 | 4" x 2"-1/2", 90° REDUCING BEND (FIPT x FIPT) | 6-C |
| 12 | 2-1/2" MIPT x 2-1/2" NST (HOSE COUPLING THREAD) | 6-C, 6-D |
| 13 | 2-1/2" HOSE NOZZLE CAP, PLASTIC WITH CHAIN | 6-C, 6-D |
| 14 | AIR-VAC ENCLOSURE (SEE STD. DWG. W-27) | 11-F |
| 15 | | |

**CITY OF VICTORVILLE - ENGINEERING DEPARTMENT**

| REV. | DATE | BY | | |
|---|---|---|---|---|
| 2 | 12/18/14 | STAFF | **4" BLOW-OFF ASSEMBLY** | **W-16** |
| 1 | 10/20/08 | STAFF | BRIAN W. GENGLER, CITY ENGINEER | SHEET 1 OF 1 |

## NOTES:

A. LOCATING WIRE TO RUN FROM MAIN, (TIED IN WITH INSULATING CONNECTORS) ALONG LATERAL AND CONNECTED TO BLOW-OFF RISER. 2

B. WHERE NO SIDEWALK IS TO BE CONSTRUCTED, A 3'x3'x6" CONCRETE PAD SHALL BE PROVIDED.

C. BLOW-OFF ASSEMBLY TO BE INSTALLED PLUMB; LATERAL TO BE INSTALLED LEVEL AND STRAIGHT, (NO DEFLECTION AT JOINTS ALLOWED).

D. EXPOSED COMPONENTS SHALL BE PAINTED WHITE.

E. **ALL JOINTS TO BE RESTRAINED.** (SEE ITEM 5 OF APPROVED MATERIALS LIST). 2

F. GUARD POSTS (PER STD. DWG. W-42) REQUIRED IF INSTALLING WHERE ACCESSIBLE TO TRAFFIC 2

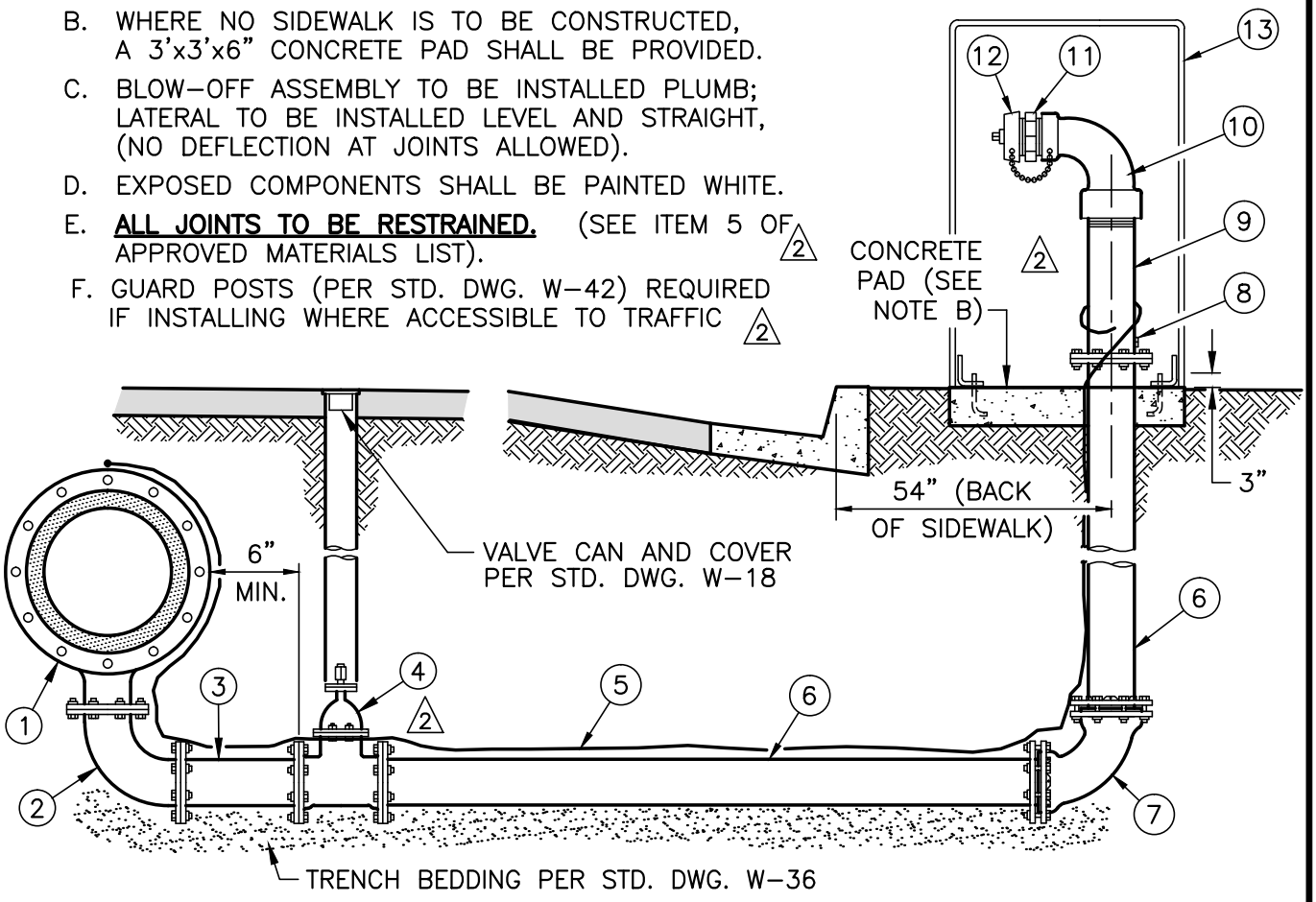


| ITEM | DESCRIPTION | APPROVED MATERIAL LIST NUMBER |
|---|---|---|
| 1 | MAINSIZE x 6" TEE | 6-B |
| 2 | 6" 90° BEND (FL) | 6-C |
| 3 | 6" SPOOL (FL), LENGTH AS NEEDED | 6-E |
| 4 | 6" GATE VALVE (FLG'D) | 2-B |
| 5 | LOCATING WIRE WITH CONNECTORS (IF REQUIRED BY INSPECTOR) 2 | 10-A, 10-B |
| 6 | 6" PIPE (FL x PE) 2 | 1-C |
| 7 | 6" 90° BEND (MJ x MJ) 2 | 6-C |
| 8 | 1/2" THREADED HOLE WITH PLUG | |
| 9 | 6" GALVANIZED STEEL, 18" LONG (MIPT x FL) | 1-G |
| 10 | 6" x 2"-1/2", 90° REDUCING BEND (FIPT x FIPT) | 6-C |
| 11 | 4" MIPT x 2-1/2" NST (HOSE COUPLING THREAD) | 6-C, 6-D |
| 12 | 4" HOSE NOZZLE CAP, PLASTIC WITH CHAIN | 6-C, 6-D |
| 13 | AIR-VAC ENCLOSURE (SEE STD. DWG. W-27) | 11-F |
| 14 | | |

**CITY OF VICTORVILLE - ENGINEERING DEPARTMENT**

| REV. | DATE | BY | | |
|---|---|---|---|---|
| 2 | 12/18/14 | FE | **6" BLOW-OFF ASSEMBLY** | **W-17** |
| 1 | 10/20/08 | STAFF | BRIAN W. GENGLER, CITY ENGINEER | SHEET 1 OF 1 |

## NOTES:

△2 A. VALVE CAN ASSEMBLY SHALL NOT BE LOCATED IN A GUTTER OR CROSS GUTTER.

B. WHERE DEPTH TO VALVE OPERATOR IS OVER 6 FEET, AN OPERATOR EXTENSION PER STD. DWG. W–19 WILL BE REQUIRED.

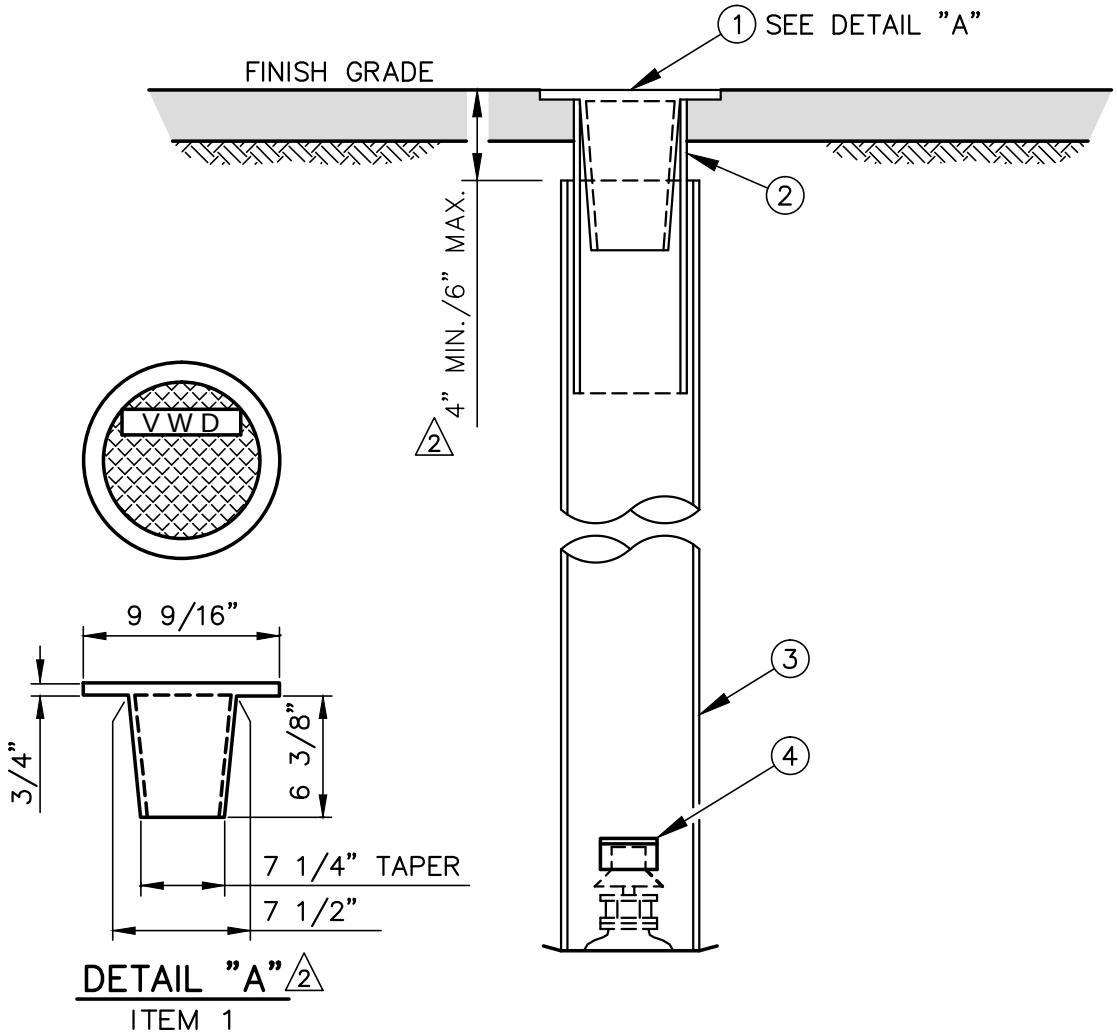


| ITEM | DESCRIPTION | APPROVED MATERIAL LIST NUMBER |
|---|---|---|
| 1 | VALVE COVER – WITH 1" 'VWD' CAST THEREON FOR WATER LINE | 13–F |
| 2 | VALVE SLIP CAN – 18" LONG (ADJUST TO GRADE, ONE ONLY) | 13–G |
| 3 | VALVE CAN TUBE – 8" C900 CL305 OR DR14, (LENGTH VARIES) △2 | 13–H |
| 4 | VALVE | 2–A, 2–B |
| | | |

**CITY OF VICTORVILLE - ENGINEERING DEPARTMENT**

| REV. | DATE | BY | VALVE CAN ASSEMBLY | W-18 |
|---|---|---|---|---|
| 2 | 12/18/14 | STAFF | | |
| 1 | 8/13/08 | STAFF | BRIAN W. GENGLER, CITY ENGINEER | SHEET 1 OF 1 |

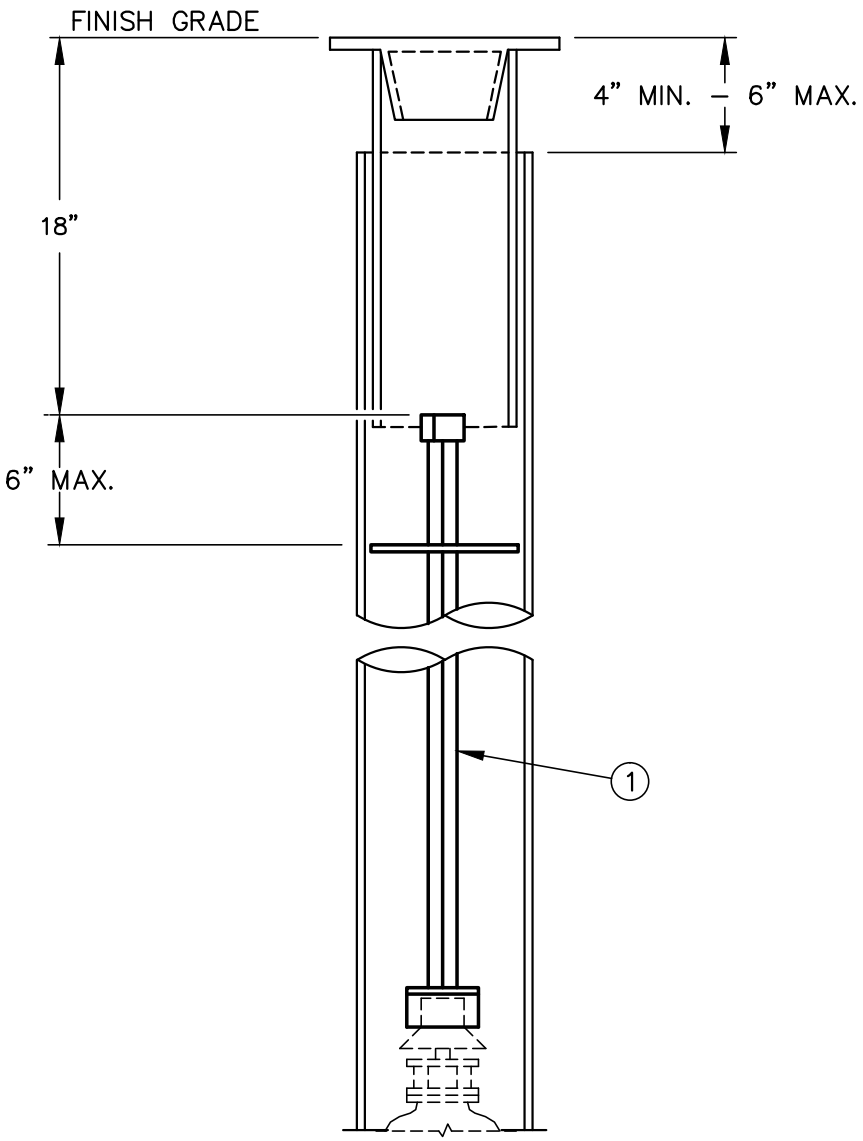


NOTES:

A. EXTEND 2" NUT TO WITHIN 18" OF FINISH GRADE WHEN VALVE NUT IS DEEPER THAN 6 FEET FROM FINISHED GRADE.

2 B. WHERE LENGTH OF EXTENSION IS OVER 8 FEET, A SECOND PLATE SHALL BE INSTALLED IN THE CENTER OF THE EXTENSION STEM.

C. EXTENSION STEM SHALL BE OF SOLID DESIGN, NO PINNED COUPLINGS PERMITTED.

D. EXTENSION STEMS SHALL NOT BE ATTACHED TO THE OPERATING NUT OF THE VALVE.

| ITEM | DESCRIPTION | APPROVED MATERIAL LIST NUMBER |
|---|---|---|
| 1 | VALVE STEM EXTENSION | 13–1 |

| CITY OF VICTORVILLE - ENGINEERING DEPARTMENT | | | | |
|---|---|---|---|---|
| REV. | DATE | BY | VALVE OPERATOR EXTENSION | W-19 |
| 2 | 12/18/14 | CLS | | |
| 1 | 8/13/08 | STAFF | BRIAN W. GENGLER, CITY ENGINEER | SHEET 1 OF 1 |

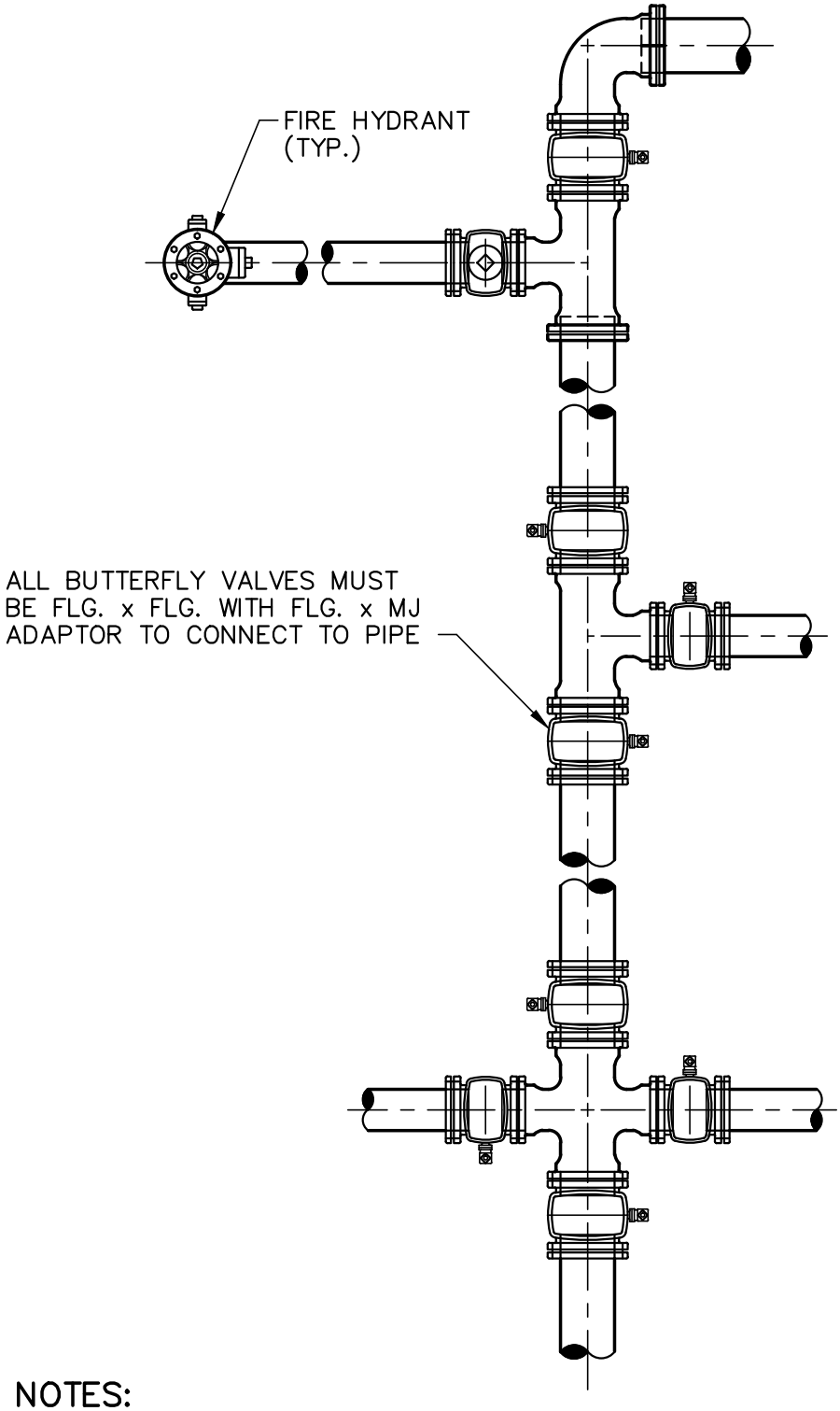


## NOTES:

A. ALL VALVES MUST BE FLANGED TO AN ADJACENT FITTING, INCLUDING AT PHASE BREAKS.

B. SEE STANDARD DRAWING W–18 FOR VALVE CAN REQUIREMENTS.

C. IF STANDING ON TEE OR CROSS LOOKING TOWARD MAIN, VALVE OPERATOR SHALL BE ON LEFT SIDE OF MAIN.

| CITY OF VICTORVILLE - ENGINEERING DEPARTMENT | | | | |
|---|---|---|---|---|
| REV. | DATE | BY | **TYPICAL BUTTERFLY VALVE OPERATOR LOCATIONS** | **W-20** |
| 2 | 12/18/14 | STAFF | | |
| 1 | 10/16/08 | STAFF | BRIAN W. GENGLER, CITY ENGINEER | SHEET 1 OF 1 |

## NOTES:

A. NO FULL SIZE TAPS ARE PERMITTED ON CLASS 150 PVC C-900. 2

B. REFER TO "GENERAL PIPING SYSTEM AND APPURTENANCES" SECTION OF THE SPECIFICATIONS. 2

C. VALVE TO BE INSTALLED MUST BE BOLTED ON. 2

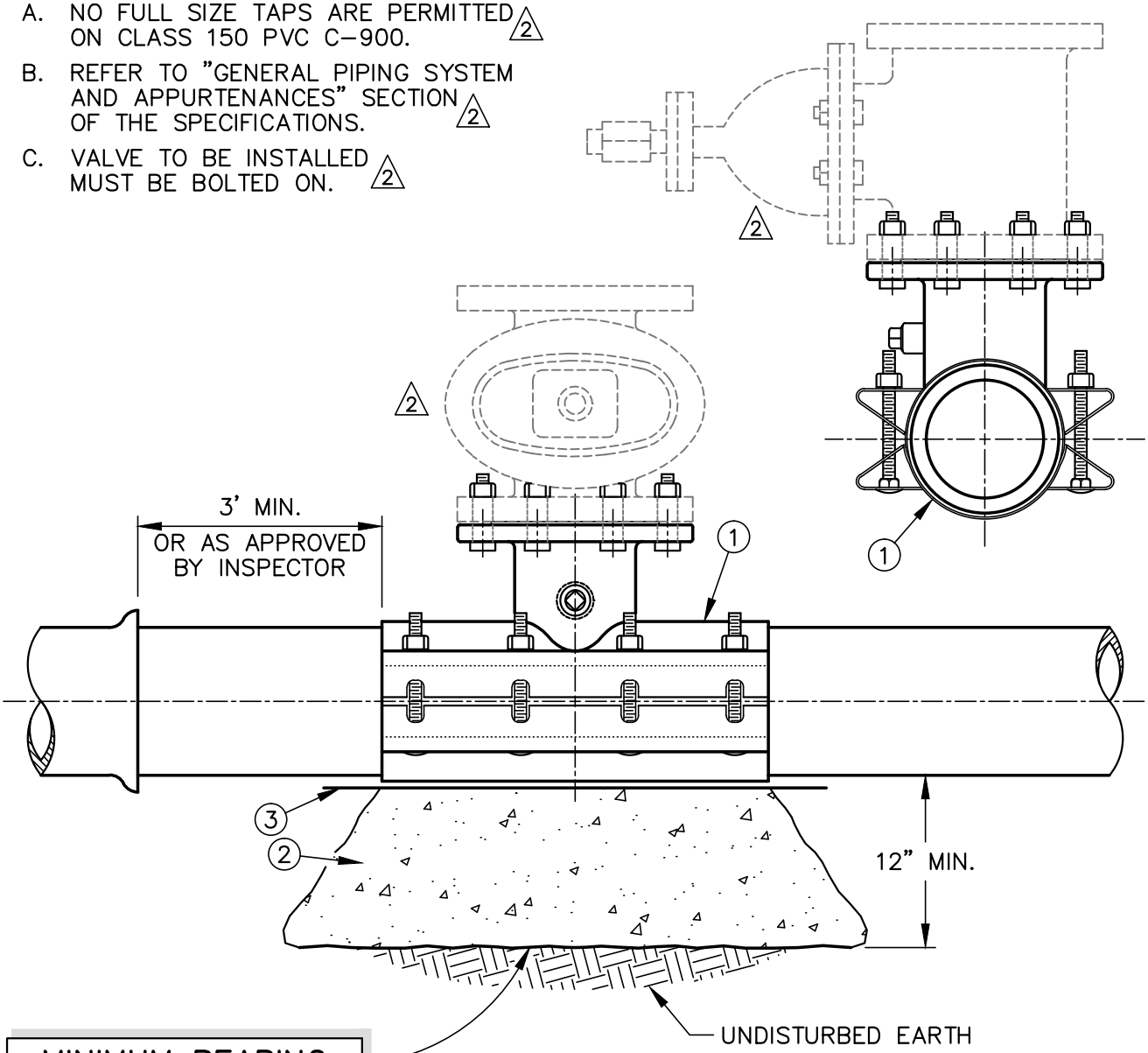


| MINIMUM BEARING SURFACE AREA | |
|---|---|
| PIPE SIZE | TEE |
| 6" | 3.5 SQ. FT. |
| 8" | 5.5 SQ. FT. |
| 12" | 12.0 SQ. FT. |

| ITEM | DESCRIPTION | APPROVED MATERIAL LIST NUMBER |
|---|---|---|
| 1 | TAPPING SLEEVE | 7-A |
| 2 | CONCRETE THRUST BLOCK | |
| 3 | BOND BREAKER | 13-E |

| CITY OF VICTORVILLE - ENGINEERING DEPARTMENT | | | | |
|---|---|---|---|---|
| REV. | DATE | BY | HOT TAP DETAIL AC, PVC, DIP | W-21 |
| 2 | 4/1/14 | STAFF | | |
| 1 | 10/16/08 | STAFF | BRIAN W. GENGLER, CITY ENGINEER | SHEET 1 OF 1 |

## NOTES:

A. USE COLLAR REINFORCEMENT WHEN OUTLET TO MAIN RATIO IS 50% OR LESS.

B. USE WRAPPER REINFORCEMENT WHEN OUTLET TO MAIN RATIO IS GREATER THAN 50%.

C. REINFORCEMENT DESIGN IS BASED ON THE STEEL AREA REMOVED FROM THE MAIN LINE AND THE OPERATING PRESSURE OF THE SYSTEM.

D. JOB SPECIFICATIONS/DETAILS FOR REINFORCEMENT SHALL GOVERN IF IN EXCESS OF NOTES A, B AND C ABOVE.

E. OUTLET NOZZLE SHOULD BE POSITIONED AND WELDED ON TO MAIN PRIOR TO WELDING ON THE REQUIRED REINFORCEMENT (COLLAR–WRAPPER).

F. FLANGE SHALL BE ATTACHED WITH BOLT HOLES CENTERED ABOUT THE VERTICAL AXIS OF THE PIPE UNLESS OTHERWISE NOTED.

G. ON CEMENT COATED STEEL PIPE, RECOAT PIPE ACCORDING TO MANUFACTURERS RECOMMENDATIONS.

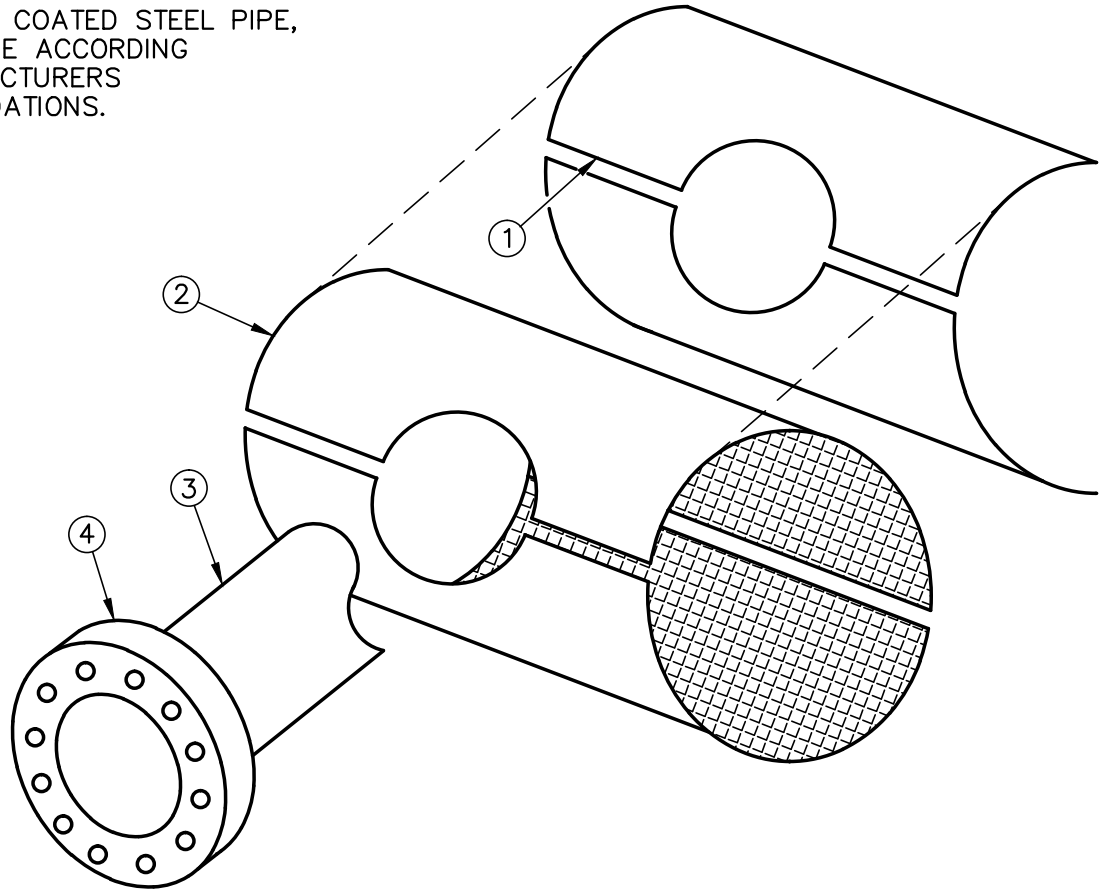


| ITEM | DESCRIPTION | APPROVED MATERIAL LIST NUMBER |
|---|---|---|
| 1 | COLLAR REINFORCEMENT | 7–C |
| 2 | WRAPPER REINFORCEMENT (FULL WRAP) | 7–C |
| 3 | OUTLET NOZZLE | 7–D |
| 4 | FLANGE | 7–E |

**CITY OF VICTORVILLE - ENGINEERING DEPARTMENT**

| REV. | DATE | BY | TAPPING OUTLET - FOR STEEL PIPE | W-22 |
|---|---|---|---|---|
| | | | | |
| 1 | 8/14/08 | STAFF | BRIAN W. GENGLER, CITY ENGINEER | SHEET 1 OF 1 |

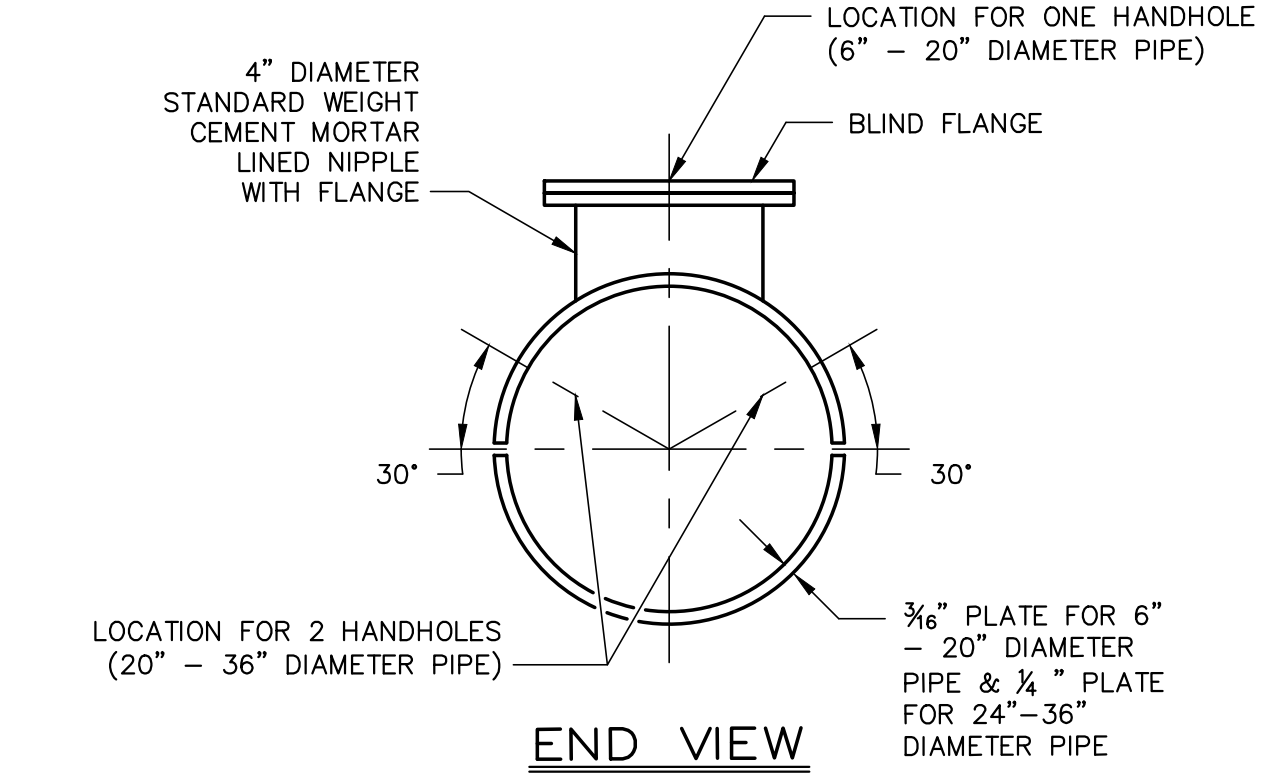


END VIEW

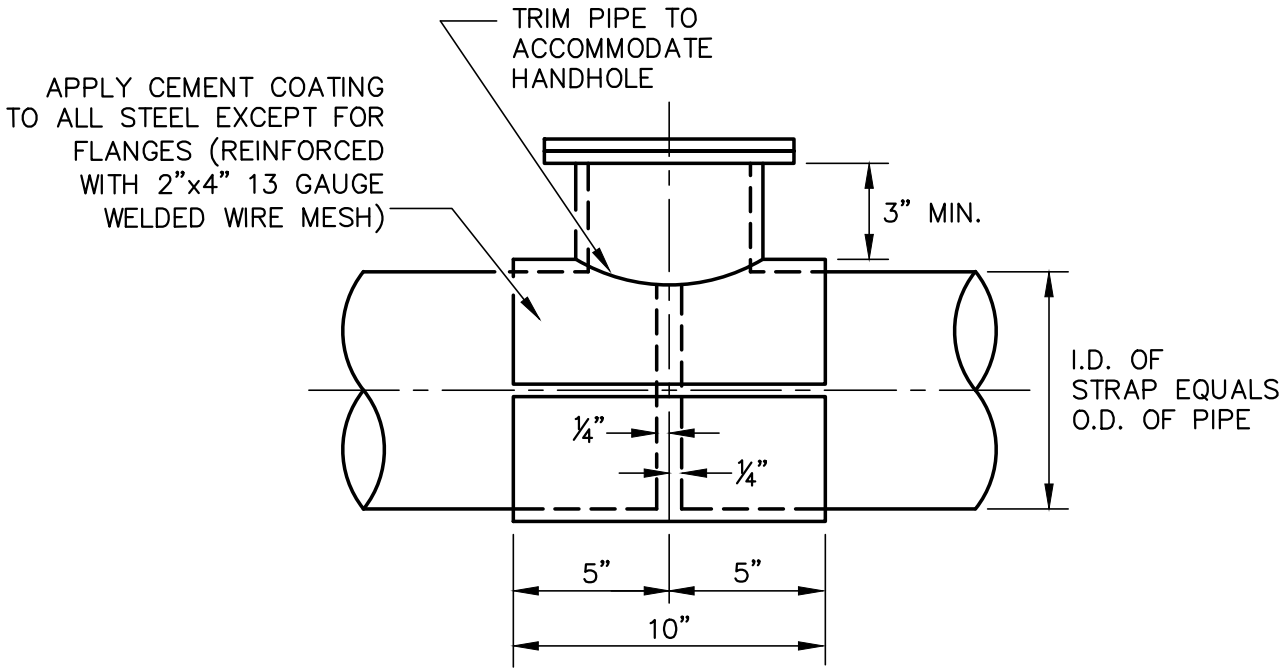


SIDE VIEW

## NOTE:

A. ALL JOINTS SHALL BE FULLY WELDED

B. FLANGE BOLTS SHALL BE SELECTED FROM THE APPROVED MATERIALS LIST.

| CITY OF VICTORVILLE - ENGINEERING DEPARTMENT | | | | |
|---|---|---|---|---|
| REV. | DATE | BY | **WELDED STEEL PIPE BUTT-JOINT WITH HANDHOLE** | **W-23** |
| 2 | 12/18/14 | STAFF | | |
| 1 | 8/14/08 | STAFF | BRIAN W. GENGLER, CITY ENGINEER | SHEET 1 OF 1 |

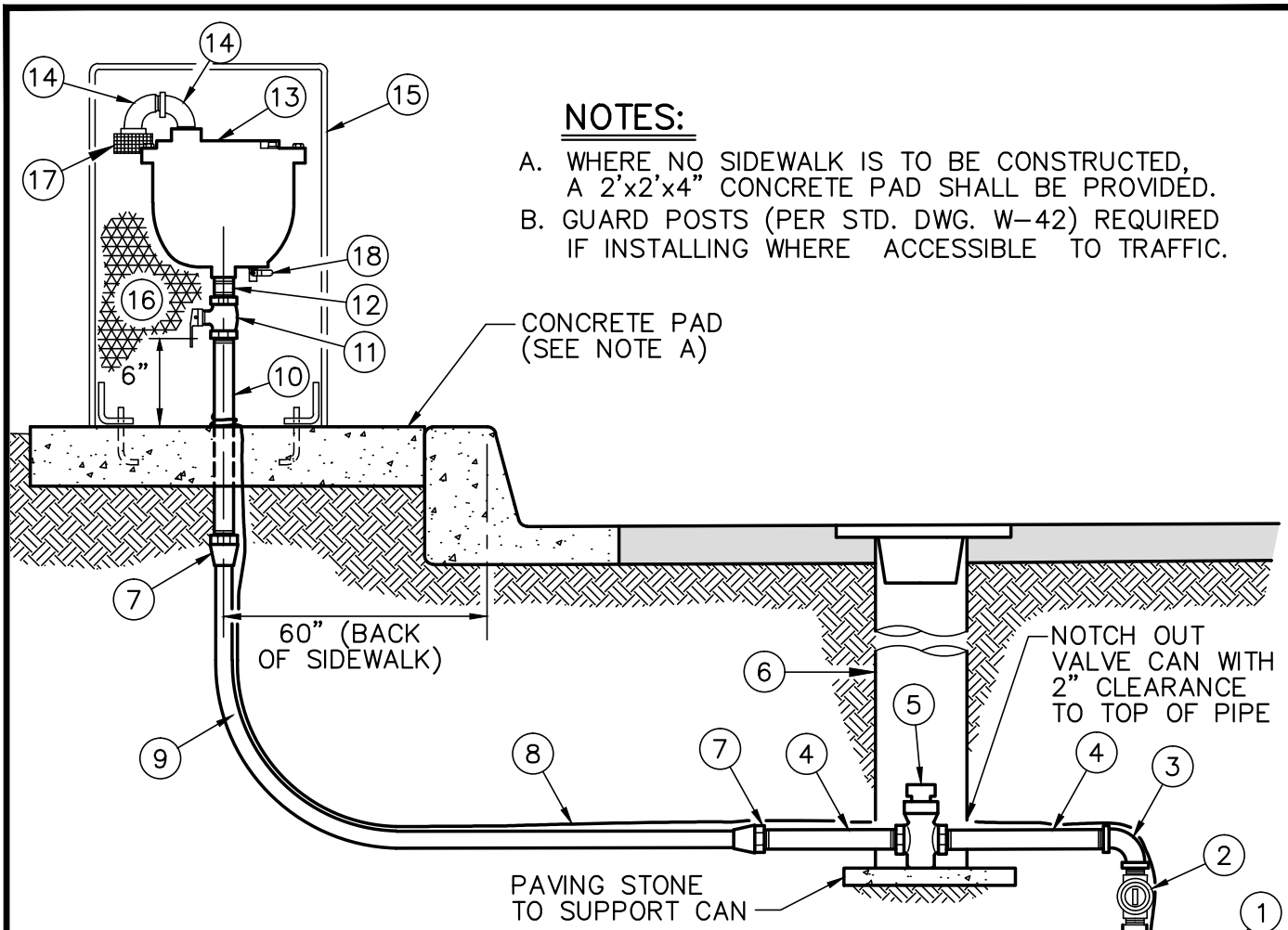


## NOTES:

A. WHERE NO SIDEWALK IS TO BE CONSTRUCTED, A 2'x2'x4" CONCRETE PAD SHALL BE PROVIDED.

B. GUARD POSTS (PER STD. DWG. W–42) REQUIRED IF INSTALLING WHERE ACCESSIBLE TO TRAFFIC.

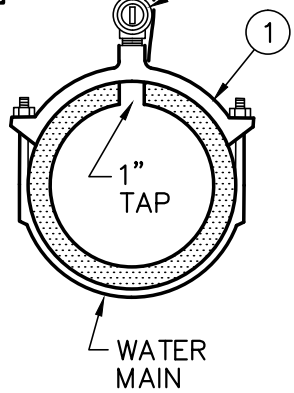


| ITEM | DESCRIPTION | APPROVED MATERIAL LIST NUMBER |
|---|---|---|
| 1 | "MAIN SIZE" x 1" SERVICE SADDLE | 7–B |
| 2 | 1" CORP. STOP (MIPT x MIPT) | 2–C |
| 3 | 1" 90° BEND, BRONZE, (FIPT x FIPT) | 6–D |
| 4 | (2) 1" x 6" NIPPLE, BRASS, (MIPT x MIPT) | 6–D |
| 5 | 2" GATE VALVE, 2" OP NUT W/ 2"x1" BUSHINGS | 2–B |
| 6 | VALVE CAN SET (SEE STD. DWG. W–18) | 13–F,G,H |
| 7 | (2) 1" COMPRESSION FITTING | 6–D |
| 8 | LOCATING WIRE WITH CONNECTORS (IF REQUIRED) 2 | 10–A, 10–B |
| 9 | 1" TUBING (LENGTH VARIES, GRADES TOWARD MAIN) | 1–D |
| 10 | 1" x 18" NIPPLE, BRASS, (MIPT x MIPT) | 6–D |
| 11 | 1" BALL VALVE W/ HANDLE, BRONZE (FIPT x FIPT) | 2–I |
| 12 | 1" x CLOSE NIPPLE, BRASS, (MIPT x MIPT) | 6–D |
| 13 | 1" AIR AND VACUUM RELEASE VALVE, (FIPT) | 11–A |
| 14 | (2) 1" 90° PVC SCH. 80 STREET BENDS | 6–F |
| 15 | AIR–VAC ENCLOSURE (SEE STD. DWG. W–27) | 11–D |
| 16 | INSULATING BAG | 11–G |
| 17 | SCREENED CAP | 11–H |
| 18 | 1/2" BALL VALVE | 2–I |

**CITY OF VICTORVILLE - ENGINEERING DEPARTMENT**

| REV. | DATE | BY | | |
|---|---|---|---|---|
| 2 | 12/18/14 | STAFF | **STANDARD 1" AIR AND VACUUM RELEASE VALVE ASSEMBLY** | **W-24** |
| 1 | 10/20/08 | STAFF | BRIAN W. GENGLER, CITY ENGINEER | SHEET 1 OF 1 |

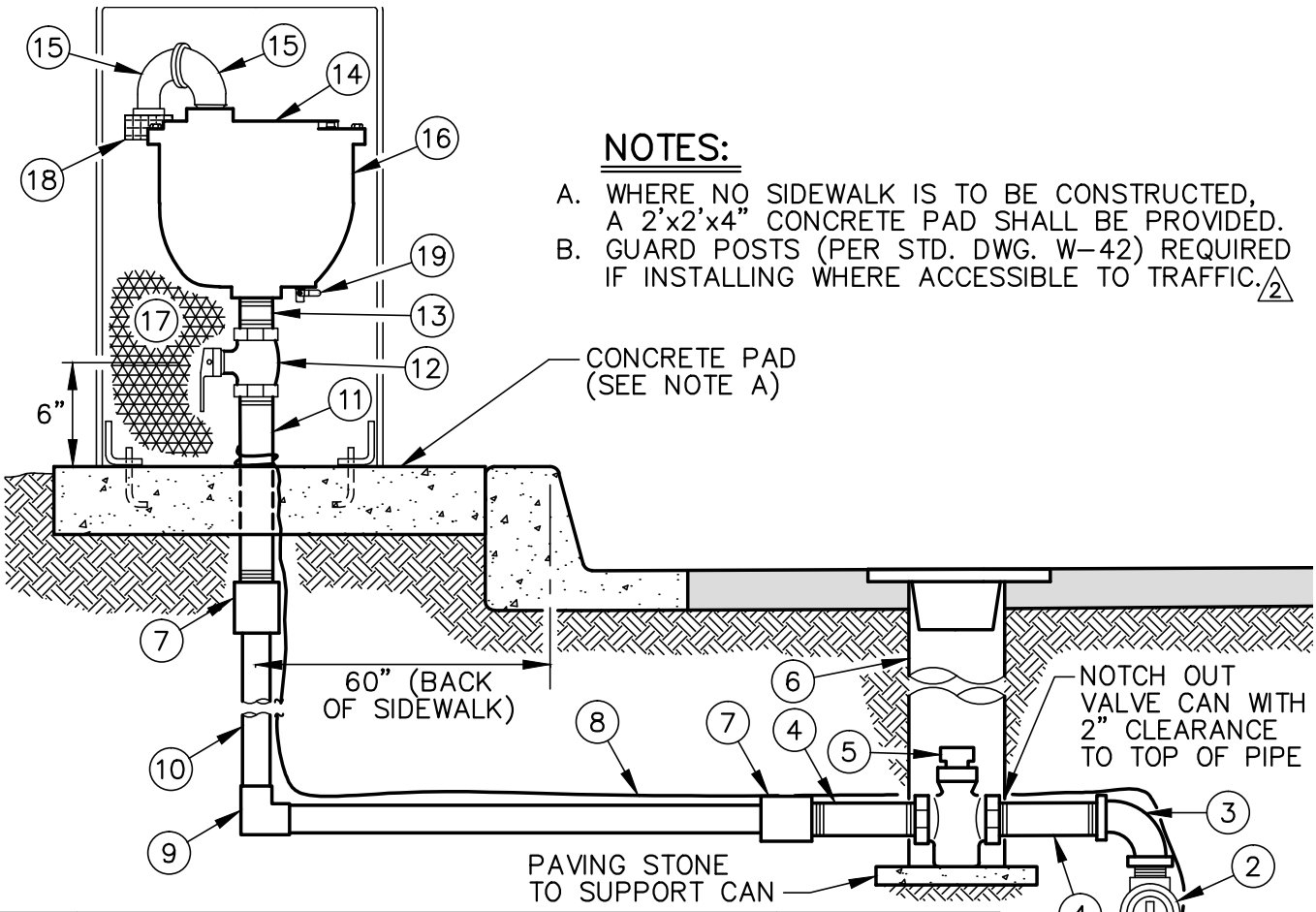


## NOTES:

A. WHERE NO SIDEWALK IS TO BE CONSTRUCTED, A 2'x2'x4" CONCRETE PAD SHALL BE PROVIDED.

B. GUARD POSTS (PER STD. DWG. W-42) REQUIRED IF INSTALLING WHERE ACCESSIBLE TO TRAFFIC. 2

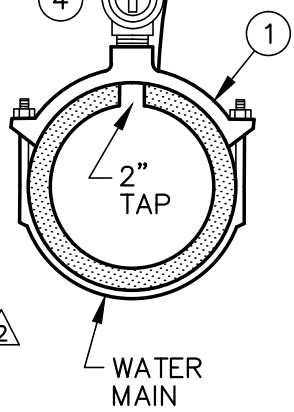


| ITEM | DESCRIPTION | APPROVED MATERIAL LIST NUMBER |
|---|---|---|
| 1 | "MAIN SIZE" x 2" SERVICE SADDLE | 7-B |
| 2 | 2" CORP. STOP (MIPT x MIPT) | 2-D |
| 3 | 2" 90° BEND, BRONZE, (FIPT x FIPT) | 6-D |
| 4 | (2) 2" x 6" NIPPLE, BRASS, (MIPT x MIPT) | 6-D |
| 5 | 2" GATE VALVE, 2" OPERATING NUT | 2-B |
| 6 | VALVE CAN SET (SEE STD. DWG. W-18) | 13-F,G,H |
| 7 | 2" SOLDER x FIPT FITTING | 6-D |
| 8 | LOCATING WIRE W/ CONNECTORS (IF REQUIRED) | 10-A, 10-B 2 |
| 9 | 2" - 90° SOLDER FITTING | 6-D |
| 10 | 2" TUBING (LENGTH VARIES, GRADES TOWARD MAIN) | 1-D |
| 11 | 2" x 18" NIPPLE, BRASS, (MIPT x MIPT) | 6-D |
| 12 | 2" BALL VALVE W/ HANDLE, BRONZE (FIPT x FIPT) | 2-I |
| 13 | 2" x CLOSE NIPPLE, BRASS, (MIPT x MIPT) | 6-D |
| 14 | 2" AIR AND VACUUM RELEASE VALVE, (FIPT) | 11-B |
| 15 | (2) 2" 90° PVC SCH. 80 STREET BEND | 6-F |
| 16 | AIR-VAC ENCLOSURE (SEE STD. DWG. W-27) | 11-E |
| 17 | INSULATING BAG | 11-G |
| 18 | SCREENED CAP | 11-H |
| 19 | 1/2" BALL VALVE | 2-I |

**CITY OF VICTORVILLE - ENGINEERING DEPARTMENT**

| REV. | DATE | BY | STANDARD 2" AIR AND VACUUM RELEASE VALVE ASSEMBLY | W-25 |
|---|---|---|---|---|
| 2 | 12/18/14 | STAFF | | |
| 1 | 10/20/08 | STAFF | BRIAN W. GENGLER, CITY ENGINEER | SHEET 1 OF 1 |

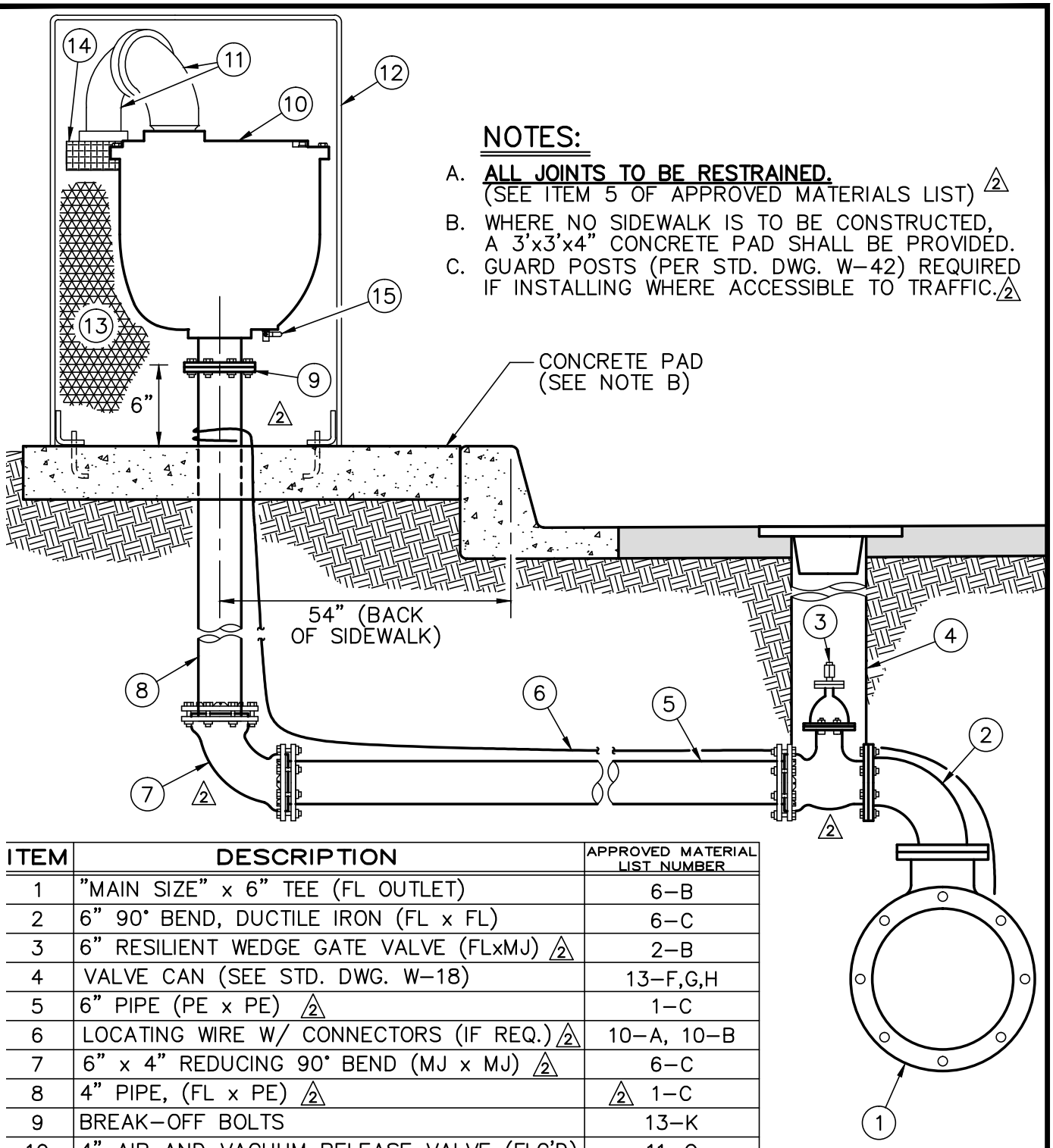


## NOTES:

A. **ALL JOINTS TO BE RESTRAINED.** (SEE ITEM 5 OF APPROVED MATERIALS LIST) 2

B. WHERE NO SIDEWALK IS TO BE CONSTRUCTED, A 3'x3'x4" CONCRETE PAD SHALL BE PROVIDED.

C. GUARD POSTS (PER STD. DWG. W-42) REQUIRED IF INSTALLING WHERE ACCESSIBLE TO TRAFFIC. 2

| ITEM | DESCRIPTION | APPROVED MATERIAL LIST NUMBER |
|---|---|---|
| 1 | "MAIN SIZE" x 6" TEE (FL OUTLET) | 6-B |
| 2 | 6" 90° BEND, DUCTILE IRON (FL x FL) | 6-C |
| 3 | 6" RESILIENT WEDGE GATE VALVE (FLxMJ) 2 | 2-B |
| 4 | VALVE CAN (SEE STD. DWG. W-18) | 13-F,G,H |
| 5 | 6" PIPE (PE x PE) 2 | 1-C |
| 6 | LOCATING WIRE W/ CONNECTORS (IF REQ.) 2 | 10-A, 10-B |
| 7 | 6" x 4" REDUCING 90° BEND (MJ x MJ) 2 | 6-C |
| 8 | 4" PIPE, (FL x PE) 2 | 2 1-C |
| 9 | BREAK-OFF BOLTS | 13-K |
| 10 | 4" AIR AND VACUUM RELEASE VALVE (FLG'D) | 11-C |
| 11 | (2) 2" 90° PVC SCH. 80 STREET BEND | 6-F |
| 12 | AIR-VAC ENCLOSURE (SEE STD. DWG. W-27) | 11-F |
| 13 | INSULATING BAG | 11-G |
| 14 | SCREENED CAP | 11-H |
| 15 | 1/2" BALL VALVE | 2-I |

**CITY OF VICTORVILLE - ENGINEERING DEPARTMENT**

| REV. | DATE | BY | STANDARD 4" AIR AND VACUUM RELEASE VALVE ASSEMBLY | W-26 |
|---|---|---|---|---|
| 2 | 12/18/14 | CLS/FE | | |
| 1 | 10/20/08 | STAFF | BRIAN W. GENGLER, CITY ENGINEER | SHEET 1 OF 1 |

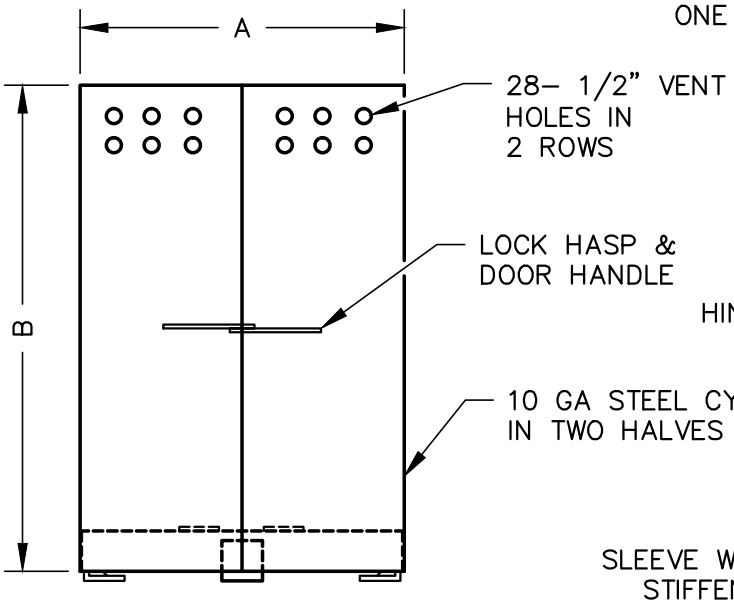


FRONT

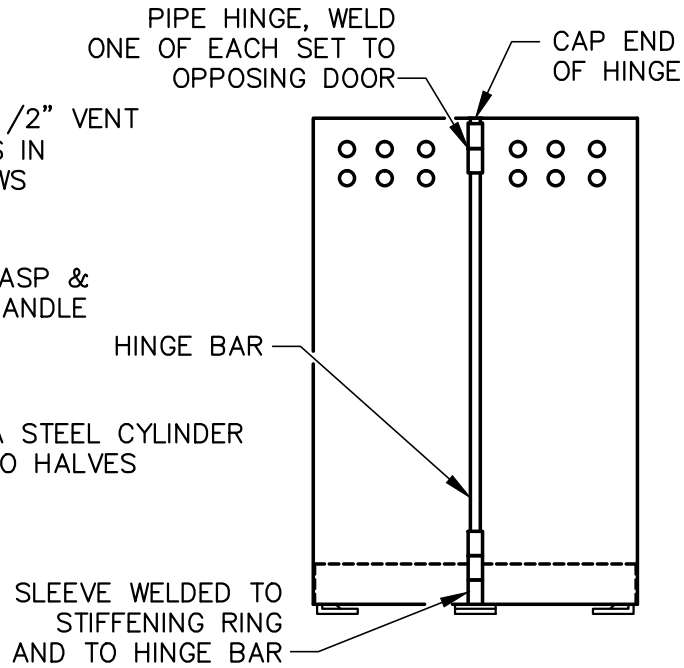


BACK

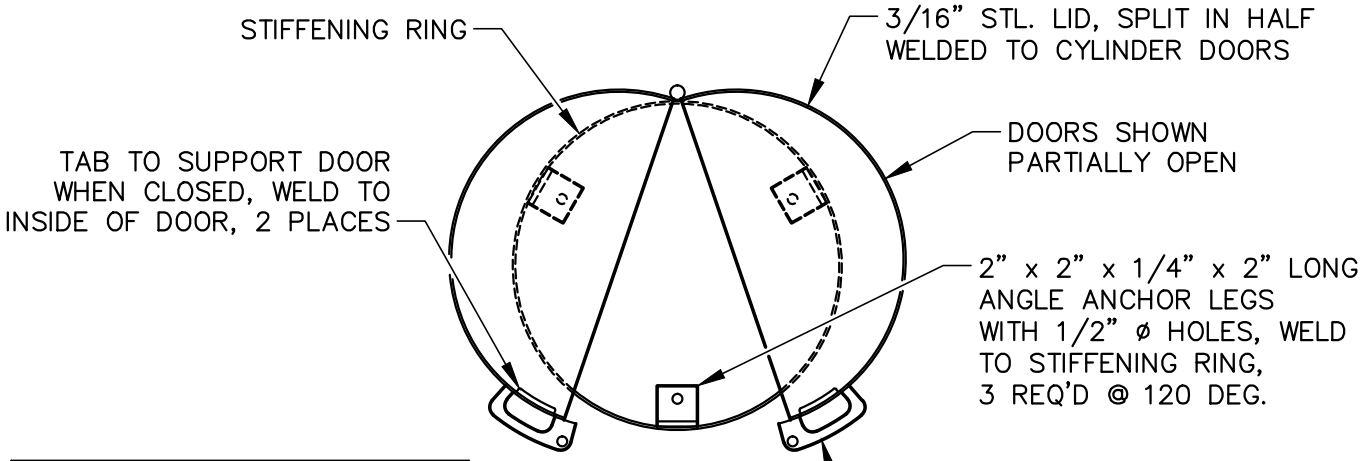


TOP

| VALVE SIZE | DIAMETER A | HEIGHT B |
|---|---|---|
| 1" | 16" | 24" |
| 2" | 16" | 30" |
| 4" | 24" | 36" |
| 6" | 30" | 42" |

NOTE:
THIS ENCLOSURE SHALL BE SUPPLIED WITH A ZINC RICH PRIMER AND RAL–1023 "SAFETY YELLOW" POLYESTER POWDER COAT FINISH.

| ITEM | DESCRIPTION | APPROVED MATERIAL LIST NUMBER |
|---|---|---|
| | AIR & VACUUM VALVE ENCLOSURE | 11–D, 11–E, 11–F |
| | | |

**CITY OF VICTORVILLE - ENGINEERING DEPARTMENT**

| REV. | DATE | BY | | |
|---|---|---|---|---|
| 2 | 12/18/14 | STAFF | **AIR & VACUUM VALVE ENCLOSURE** | **W-27** |
| 1 | 10/16/08 | STAFF | BRIAN W. GENGLER, CITY ENGINEER | SHEET 1 OF 1 |

## NOTES:

A. REDUCED PRESSURE DETECTOR BACKFLOW ASSEMBLY SHALL BE INSTALLED IN A LOCATION APPROVED BY VWD AND THE FIRE DEPARTMENT HAVING JURISDICTION.

B. REDUCED PRESSURE DETECTOR BACKFLOW ASSEMBLY SHALL BE INSTALLED HORIZONTAL AND PLUMB.

C. ASSEMBLIES MUST BE USC & CDPH APPROVED.

D. RPBD MUST BE TESTED BY A CERTIFIED CITY BACKFLOW TESTER PRIOR TO WATER SERVICE BEING ACTIVATED. A COPY OF THE TEST MUST BE SUBMITTED TO THE INSPECTOR. △2

E. ALL ASSEMBLIES 2 1/2" AND LARGER SHALL BE FLANGED OR VICTAULIC. △2

F. GUARD POSTS (PER STD. DWG. W-42) REQUIRED IF INSTALLING WHERE ACCESSIBLE TO TRAFFIC.

G. **ALL JOINTS TO BE RESTRAINED.** (SEE ITEM 5 OF APPROVED MATERIALS LIST) △2

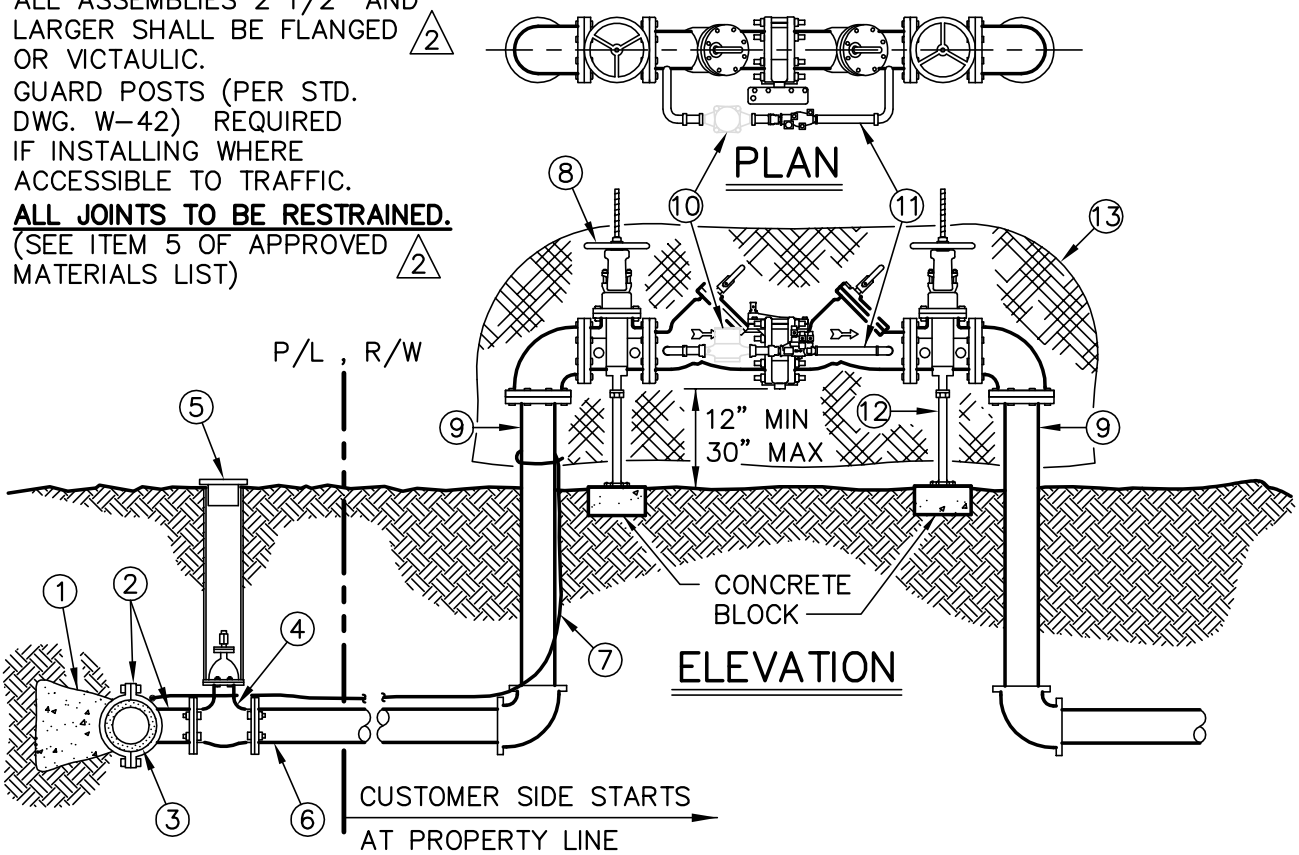


| ITEM | DESCRIPTION | APPROVED MATERIAL LIST NUMBER |
|---|---|---|
| 1 | THRUST BLOCK, AS REQUIRED | |
| 2 | TAPPING SLEEVE OR TEE | 7-A |
| 3 | WATER MAIN | |
| 4 | RESILIENT WEDGE GATE VALVE (MIN. 6") | 2-B |
| 5 | VALVE CAN & COVER PER STD. DWG. W-18 | 13-F,G,H |
| 6 | PIPE | 1-A,B,C |
| 7 | LOCATING WIRE WITH CONNECTORS (IF REQUIRED BY INSPECTOR) △2 | 10-A, 10-B |
| 8 | REDUCED PRESSURE DETECTOR ASSEMBLY W/ OS&Y VALVES △2 | 12-A |
| 9 | PIPE | 1-C |
| 10 | 3/4-INCH BY-PASS METER (FURNISHED AND INSTALLED BY VWD) △2 | 13-C |
| 11 | BY-PASS LINE ASSEMBLY WITH RP BACKFLOW | 4-A △2 |
| 12 | ADJUSTABLE PIPE SUPPORT (REQUIRED FOR 6" & LARGER) | 13-D |
| 13 | INSULATING BAG | 4-B |

**CITY OF VICTORVILLE - ENGINEERING DEPARTMENT**

| REV. | DATE | BY | | |
|---|---|---|---|---|
| 2 | 7/24/14 | STAFF | **FIRE SERVICE - REDUCED PRESSURE DETECTOR ASSEMBLY** | **W-28** |
| 1 | 8/20/08 | STAFF | BRIAN W. GENGLER, CITY ENGINEER | SHEET 1 OF 1 |

# BLANK INTENTIONALLY

| CITY OF VICTORVILLE - ENGINEERING DEPARTMENT | | | | |
|---|---|---|---|---|
| REV. | DATE | BY | BLANK INTENTIONALLY | W-29 |
| 2 | 7/2/14 | STAFF | | |
| 1 | 7/10/08 | STAFF | BRIAN W. GENGLER, CITY ENGINEER | SHEET 1 OF 1 |

## NOTES:

A. REDUCED PRESSURE DETECTOR BACKFLOW ASSEMBLY SHALL BE INSTALLED IN A LOCATION APPROVED BY VWD.

B. REDUCED PRESSURE DETECTOR BACKFLOW ASSEMBLY SHALL BE INSTALLED HORIZONTAL AND PLUMB.

C. ASSEMBLIES MUST BE USC & CDPH APPROVED.

D, RPBD MUST BE TESTED BY A CERTIFIED CITY BACKFLOW TESTER PRIOR TO WATER SERVICE BEING ACTIVATED. A COPY OF THE TEST MUST BE SUBMITTED TO THE INSPECTOR.

E. ALL ASSEMBLIES 3" AND LARGER SHALL BE FLANGED OR VICTAULIC.

F. GUARD POSTS (PER STD. DWG. W–42) REQUIRED IF INSTALLING WHERE ACCESSIBLE TO TRAFFIC.

G. **ALL JOINTS TO BE RESTRAINED.** (SEE ITEM 5 OF APPROVED MATERIALS LIST.)

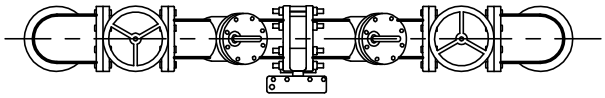

PLAN

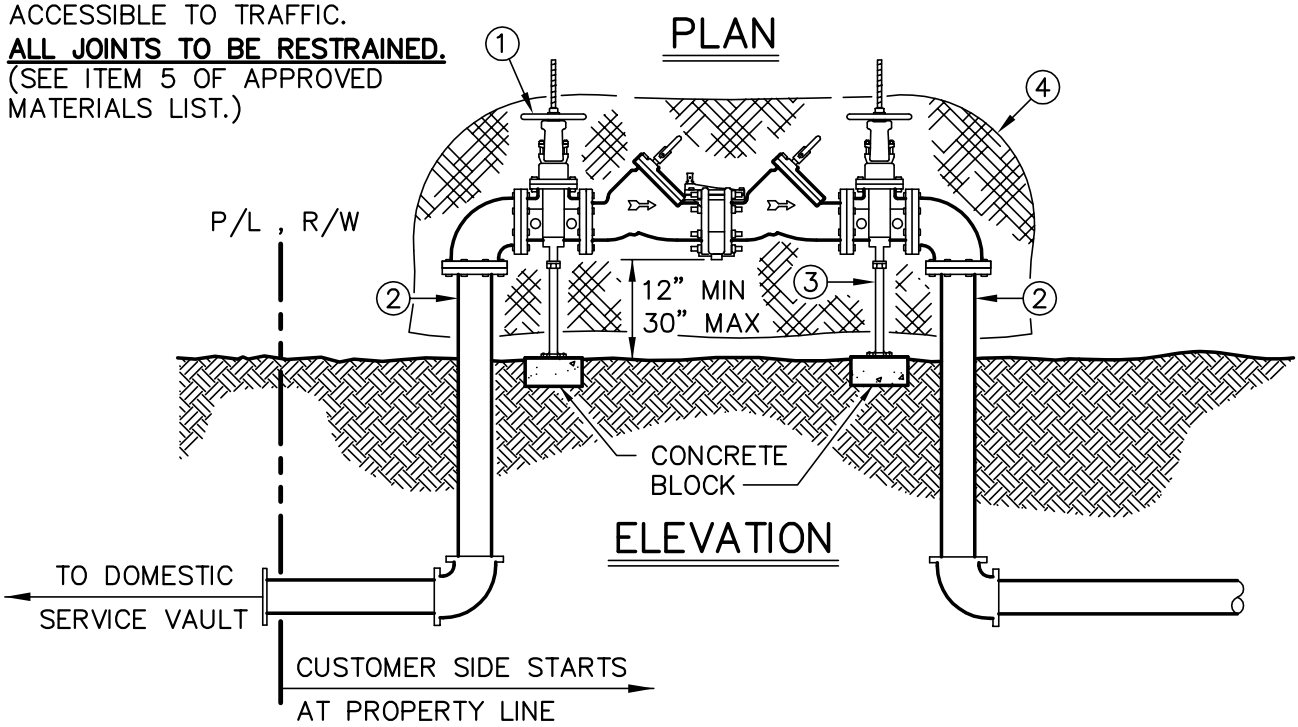


ELEVATION

| ITEM | DESCRIPTION | APPROVED MATERIAL LIST NUMBER |
|---|---|---|
| 1 | REDUCED PRESSURE DETECTOR ASSEMBLY | 12–A |
| 2 | PIPE, SAME SIZE AS METER SERVICE LINE | 1–C |
| 3 | ADJUSTABLE PIPE SUPPORT (REQUIRED FOR 6" & LARGER) | 13–C |
| 4 | INSULATING BAG | 4–B |
| | | |

| CITY OF VICTORVILLE - ENGINEERING DEPARTMENT | | | | |
|---|---|---|---|---|
| REV. | DATE | BY | **3" AND LARGER - REDUCED PRESSURE BACKFLOW DEVICE INSTALLATION** | **W-30** |
| | | | | |
| 1 | 7/24/14 | STAFF | BRIAN W. GENGLER, CITY ENGINEER | SHEET 1 OF 1 |

## NOTES:

A. RP AND PIPING SHALL BE AT LEAST THE SAME DIAMETER AS THE METER.
B. BACKFLOW DEVICE SHALL BE LEAD FREE WILKINS 975 XL2 OR APPROVED EQUAL.
C. PRESSURE REGULATOR INSTALLED WHEN PRESSURE IS GREATER THAN 100PSI.
D. RP SHALL BE LOCATED AS CLOSE TO THE METER AS POSSIBLE. LOCATION SHALL BE APPROVED BY INSPECTOR.
E. NO CONNECTIONS OF ANY KIND WILL BE ALLOWED IN THIS AREA. INSPECTION BY THE CITY SHALL TAKE PLACE PRIOR TO BACKFILL.
F. CONCRETE PAD 3 3/4" WITH BACKFLOW ENCLOSURE (ALL SPEC) PART NO. BFE-5430 FOR 2" DEVICE AND BFED-6036 FOR 2 1/2" DEVICE.
G. FREEZE PROTECTION BLANKET WITH MINIMUM R-30 RATING.
H. Y STRAINER TO BE INSTALLED BEFORE BACKFLOW DEVICE.
I. RPBD MUST BE TESTED BY A CERTIFIED CITY BACKFLOW TESTER PRIOR TO WATER SERVICE BEING ACTIVATED. A COPY OF THE TEST MUST BE SUBMITTED TO THE INSPECTOR.

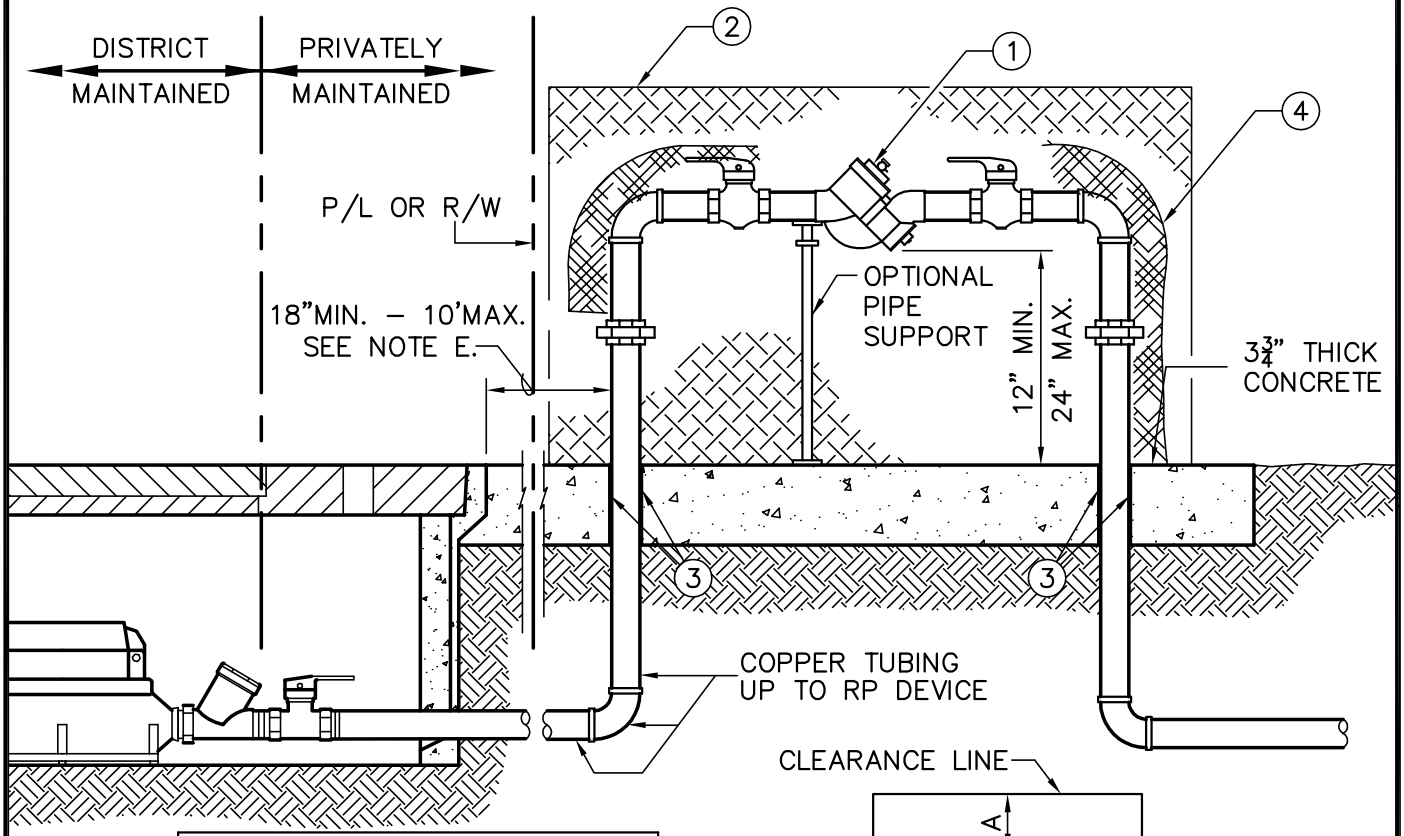


| MINIMUM CLEARANCE | | | |
|---|---|---|---|
| SIZE | A | B | C |
| 3/4" – 2" | 12" | 12" | 12" |

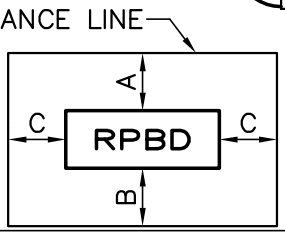


| ITEM | DESCRIPTION | APPROVED MATERIAL LIST NUMBER |
|---|---|---|
| 1 | REDUCED PRESSURE PRINCIPLE BACKFLOW PREVENTION DEVICE | 4-A |
| 2 | ALL SPEC BACKFLOW ENCLOSURE | 13-L |
| 3 | BOND BREAKER | 13-E |
| 4 | INSULATING BAG | 4-B |

**CITY OF VICTORVILLE - ENGINEERING DEPARTMENT**

| REV. | DATE | BY | LMAD BACKFLOW DEVICE INSTALLATION | W-31 |
|---|---|---|---|---|
| | | | | |
| 1 | 7/24/14 | STAFF | BRIAN W. GENGLER, CITY ENGINEER | SHEET 1 OF 1 |

# BLANK INTENTIONALLY

| CITY OF VICTORVILLE - ENGINEERING DEPARTMENT | | | | |
|---|---|---|---|---|
| REV. | DATE | BY | **BLANK INTENTIONALLY** | **W-32** |
| 2 | 7/2/14 | STAFF | | |
| 1 | 7/10/08 | STAFF | BRIAN W. GENGLER, CITY ENGINEER | SHEET 1 OF 1 |

## NOTES:

A. FOR VAULT AND PIPING LAYOUT, SEE APPLICABLE STANDARD DRAWINGS.

B. A JOINT SEALING COMPOUND SHALL BE USED AT ALL JOINTS.

C. TRAFFIC RATED LID MAY BE REQUIRED.

D. MINIMUM VAULT LID DIMENSION FOR VAULTS UP TO 5' WIDE AND 9' LONG SHALL BE 4' X 6'.

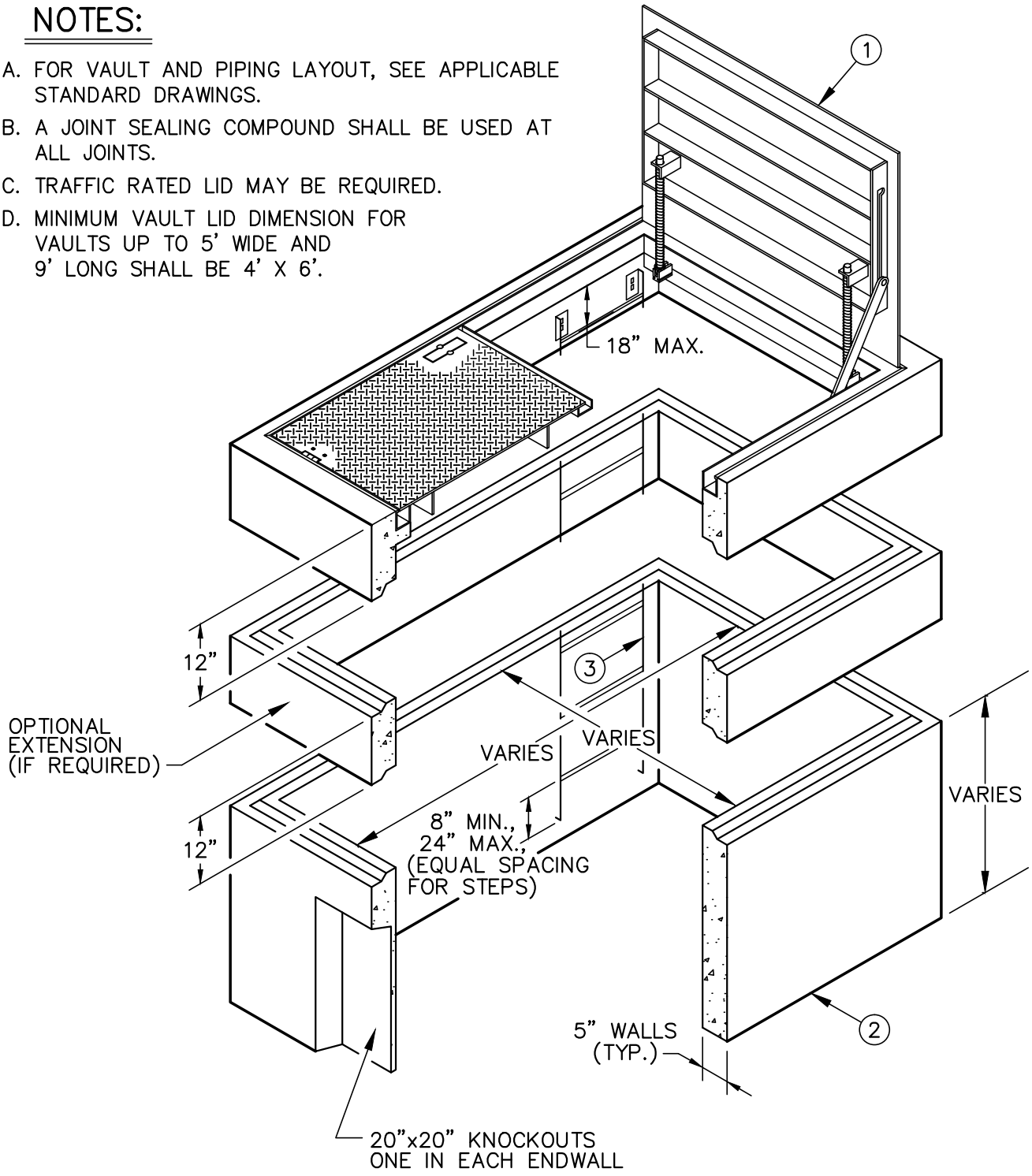


| ITEM | DESCRIPTION | APPROVED MATERIAL LIST NUMBER |
|---|---|---|
| 1 | VAULT LID | 9–B, 9–C |
| 2 | VAULT BOX | 9–A |
| 3 | LADDER | 9–F |

**CITY OF VICTORVILLE - ENGINEERING DEPARTMENT**

| REV. | DATE | BY | | |
|---|---|---|---|---|
| 2 | 12/18/14 | STAFF | **VAULT AND LID** | **W-33** |
| 1 | 10/20/08 | STAFF | BRIAN W. GENGLER, CITY ENGINEER | SHEET 1 OF 1 |

## NOTES:

A. (W) INDICATES PRESSURE UTILITY WATER MAIN FOR POTABLE WATER. DIMENSIONS ARE FROM OUTSIDE OF WATER PIPE TO OUTSIDE OF SEWER PIPE.

B. SEWER LINES SHALL BE INSTALLED AS FAR FROM UTILITY WATER LINES AS POSSIBLE.

C. IN CASES WHERE THE SEWER LINE CROSSES A WATER LINE, THE LENGTH OF SEWER PIPE SHALL BE CENTERED ON THE WATER LINE.

D. SEWER BUILDING LATERALS SHALL BE INSTALLED BELOW UTILITY WATER LINES. IF THIS CONDITION CANNOT BE MET, SPECIAL CONSTRUCTION WILL BE REQUIRED, AS SHOWN BELOW.

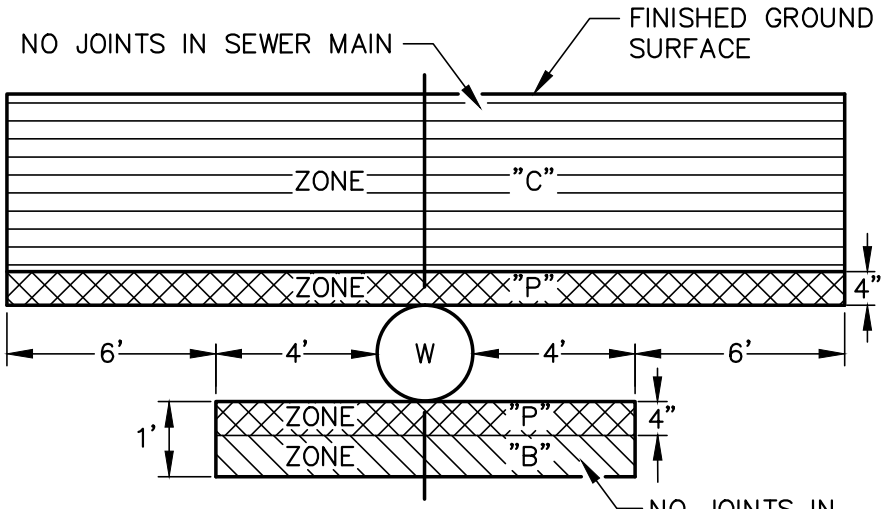


CROSSING

SANITARY SEWERS AND UTILITY WATER LINES

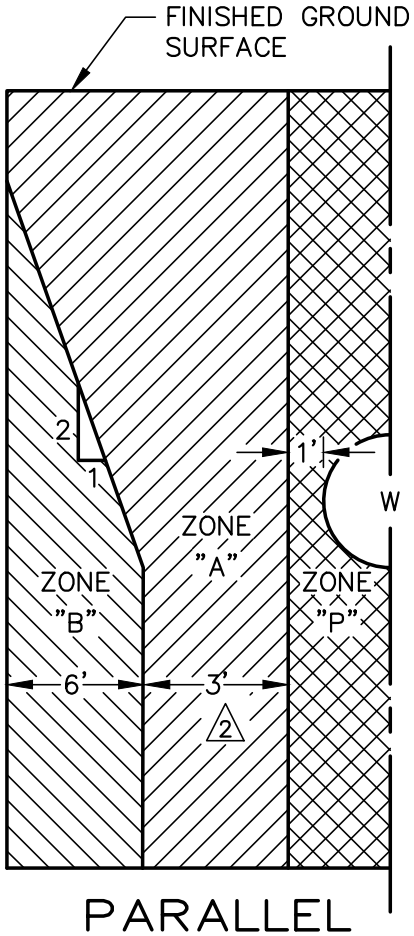


PARALLEL

SANITARY SEWERS AND UTILITY WATER LINES

| | |
|---|---|
| A | SEWER MAINS WILL NOT BE PERMITTED IN THIS ZONE WITHOUT SPECIAL PERMISSION FROM THE DEPARTMENT OF PUBLIC HEALTH, STATE OF CALIFORNIA. |
| B | SEWER MAINS WILL NOT BE PERMITTED IN THIS ZONE WITHOUT SPECIAL PERMISSION FROM THE CITY ENGINEER. 2 |
| C | SEWER MAINS IN THIS ZONE SHALL BE INSTALLED WITHIN A 1/4-INCH STEEL CONTINUOUS CASING WITH ALL VOIDS BETWEEN SEWER PIPE AND CASING FILLED WITH SAND. 2 |
| P | ZONE P IS A PROHIBITED ZONE, SECTION 64630 (e) (2) CALIFORNIA ADMINISTRATION CODE, TITLE 22. |

**CITY OF VICTORVILLE - ENGINEERING DEPARTMENT**

| REV. | DATE | BY | | |
|---|---|---|---|---|
| 2 | 12/18/14 | STAFF | **SEPARATION CRITERIA FOR EXISTING WATER MAINS FROM NEW SANITARY SEWERS OR STORM DRAINS** | **W-34** |
| 1 | 8/20/08 | STAFF | BRIAN W. GENGLER, CITY ENGINEER | SHEET 1 OF 1 |

## NOTES:

1. (S) INDICATES SANITARY SEWER MAIN OR STORM DRAIN. DIMENSIONS ARE FROM OUTSIDE OF WATER PIPE TO OUTSIDE OF SEWER OR STORM DRAIN PIPE.
2. WATER SERVICE LATERALS SHALL BE INSTALLED 4" OR MORE ABOVE SEWER MAIN OR STORM DRAIN. IF THIS CONDITION CANNOT BE MET, SPECIAL CONSTRUCTION WILL BE REQUIRED.

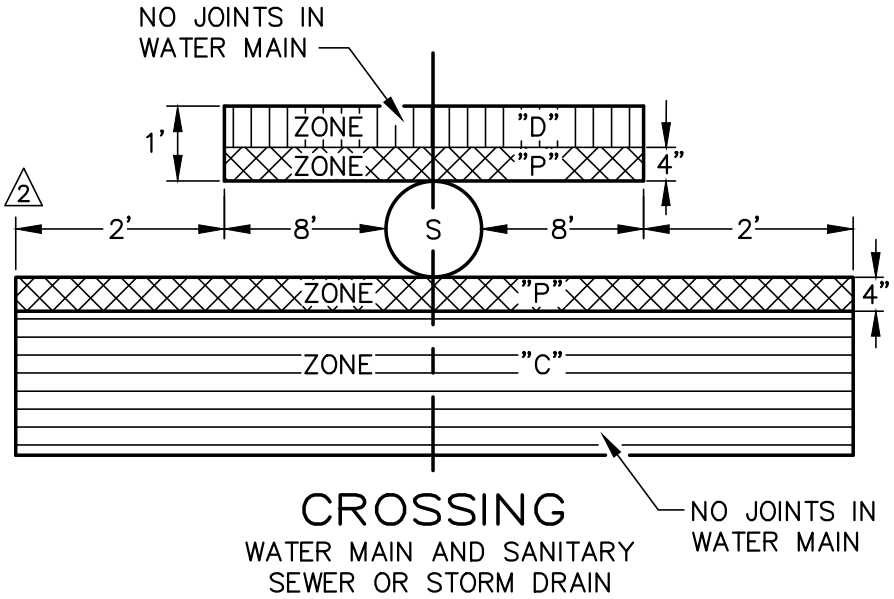


CROSSING
WATER MAIN AND SANITARY SEWER OR STORM DRAIN

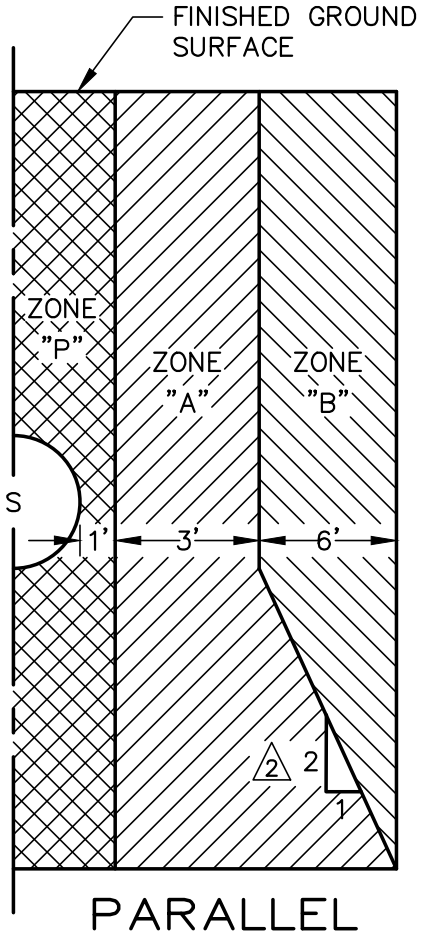


PARALLEL
WATER MAIN AND SANITARY SEWER OR STORM DRAIN

| | |
|---|---|
| A | WATER MAINS WILL NOT BE PERMITTED IN THIS ZONE WITHOUT SPECIAL PERMISSION FROM THE DEPARTMENT OF PUBLIC HEALTH, STATE OF CALIFORNIA. |
| B | WATER MAINS WILL NOT BE PERMITTED IN THIS ZONE WITHOUT SPECIAL PERMISSION FROM THE CITY ENGINEER. 2 |
| C | WATER MAINS IN THIS ZONE SHALL BE CONSTRUCTED OF CML&C STEEL PIPE WITH NO JOINTS OR DUCTILE IRON PIPE (CLASS 350 MIN.) WITH HOT DIP BITUMINOUS COATING, INSTALLED WITHIN A 1/4-INCH STEEL WELDED CASING PER STANDARD DRAWINGS W-37 & W-38 |
| D | THE WATER MAIN SHALL HAVE NO JOINTS WITHIN FOUR FEET FROM EITHER SIDE OF THE SEWER OR STORM DRAIN. |
| P | ZONE P IS A PROHIBITED ZONE, SECTION 64630 (e) (2) CALIFORNIA ADMINISTRATION CODE, TITLE 22. |

**CITY OF VICTORVILLE - ENGINEERING DEPARTMENT**

| REV. | DATE | BY | | |
|---|---|---|---|---|
| 2 | 5/24/12 | STAFF | **SEPARATION CRITERIA FOR NEW WATER MAINS FROM EXISTING SANITARY SEWERS OR STORM DRAINS** | **W-35** |
| 1 | 8/20/08 | STAFF | BRIAN W. GENGLER, CITY ENGINEER | SHEET 1 OF 1 |

## NOTES:

A. TRENCH PATH SHALL BE STRAIGHT GRADE ACROSS WIDTH, AND SHALL NOT BE CURVED AT CENTER.

B. COMPACTION TESTING MAY BE REQUIRED AT THE DISCRETION OF THE INSPECTOR.

C. BACKFILL MATERIAL MAY NOT CONTAIN CLUMPS OR ROCKS GREATER THAN 3 INCHES, ANY DIMENSION.

D. PIPE BEDDING AND PIPE ZONE BACKFILL MATERIAL SHALL BE COMPACTED TO 85% OF ATSM D-1557-91. MATERIAL SHALL HAVE SAND EQUIVALENT≥ 30. SELECT MATERIAL FROM EXCAVATION MAY BE USED ONLY WITH APPROVAL FROM INSPECTOR.

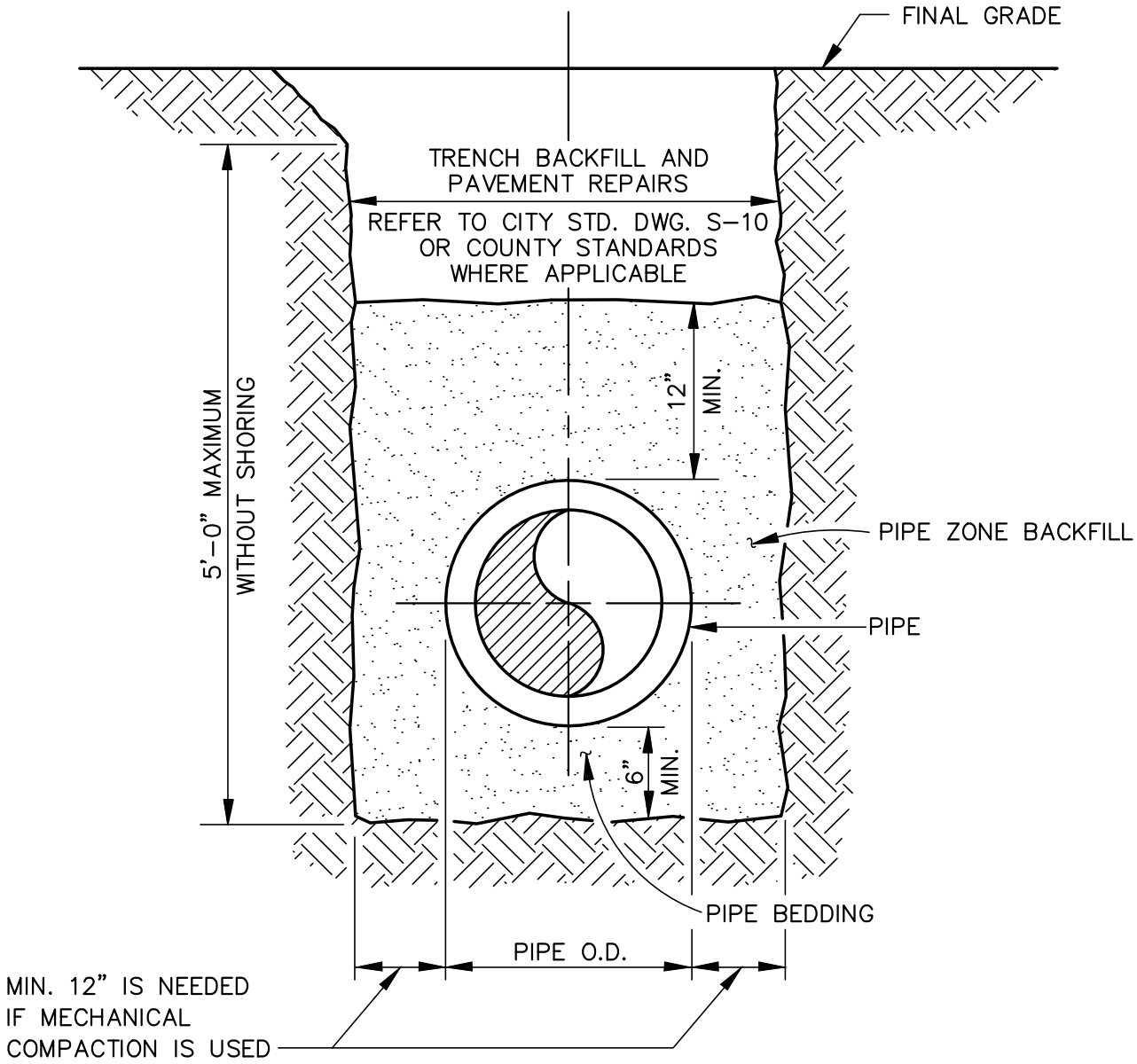


| CITY OF VICTORVILLE - ENGINEERING DEPARTMENT | | | | |
|---|---|---|---|---|
| REV. | DATE | BY | **TYPICAL TRENCH BACKFILL SCHEMATIC** | **W-36** |
| 2 | 12/18/14 | STAFF | | |
| 1 | 10/20/08 | STAFF | BRIAN W. GENGLER, CITY ENGINEER | SHEET 1 OF 1 |

## NOTES:

A. THIS STANDARD APPLIES TO UNDERCROSSINGS OF STORM DRAINS & SEWERS LESS THAN 6'–0" IN DIAMETER OR WIDTH, OR AS DIRECTED BY THE CITY. FOR LARGER UNDERCROSSINGS, REFER TO STANDARD DRAWING W–38.

B. WHEREVER POSSIBLE, WATERLINE SHOULD BE INSTALLED OVER TOP OF SEWER OR STORM DRAIN. DISCUSS MINIMUM COVER REQUIREMENTS WITH THE CITY.

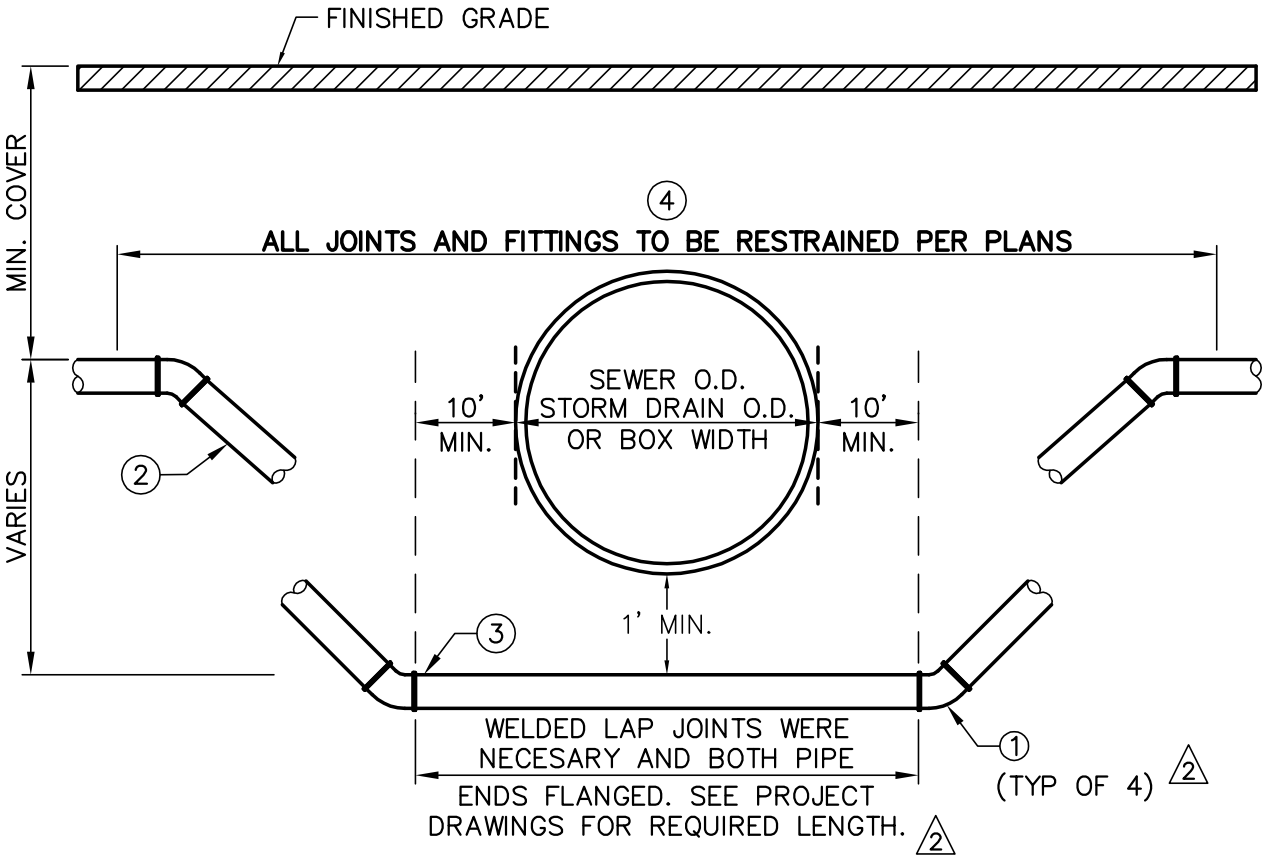


| ITEM | DESCRIPTION | APPROVED MATERIAL LIST NUMBER |
|---|---|---|
| 1 | 45° BEND 2 | 6–C |
| 2 | DUCTILE IRON PIPE | 1–C |
| 3 | CEMENT MORTAR LINED AND COATED STEEL PIPE | 1–E |
| 4 | JOINT RESTRAINTS | 5–A, B, C |
| | | |

| CITY OF VICTORVILLE - ENGINEERING DEPARTMENT | | | | |
|---|---|---|---|---|
| REV. | DATE | BY | CEMENT MORTAR LINED AND COATED (CML&C) STEEL PIPE / SEWER AND STORM DRAIN UNDERCROSSING | W-37 |
| 2 | 5/29/12 | STAFF | | |
| 1 | 8/20/08 | STAFF | BRIAN W. GENGLER, CITY ENGINEER | SHEET 1 OF 1 |

## NOTES:

A. INSTALL CASING SPACERS WITHIN 1' FROM EACH END OF THE CASING AND 1' FROM EACH BELL JOINT AND AT THE CENTER OF EACH PIPE JOINT. CONSULT MANUFACTURER FOR RECOMMENDED SPACER SIZE.

B. THIS STANDARD APPLIES TO UNDERCROSSINGS OF SEWERS AND STORM DRAINS GREATER THAN 6'–0" IN DIAMETER OR WIDTH, OR AS DIRECTED BY THE CITY.

C. WHEREVER POSSIBLE, WATERLINE SHOULD BE INSTALLED OVER TOP OF SEWER OR STORM DRAIN. DISCUSS MINIMUM COVER REQUIREMENTS WITH THE CITY.

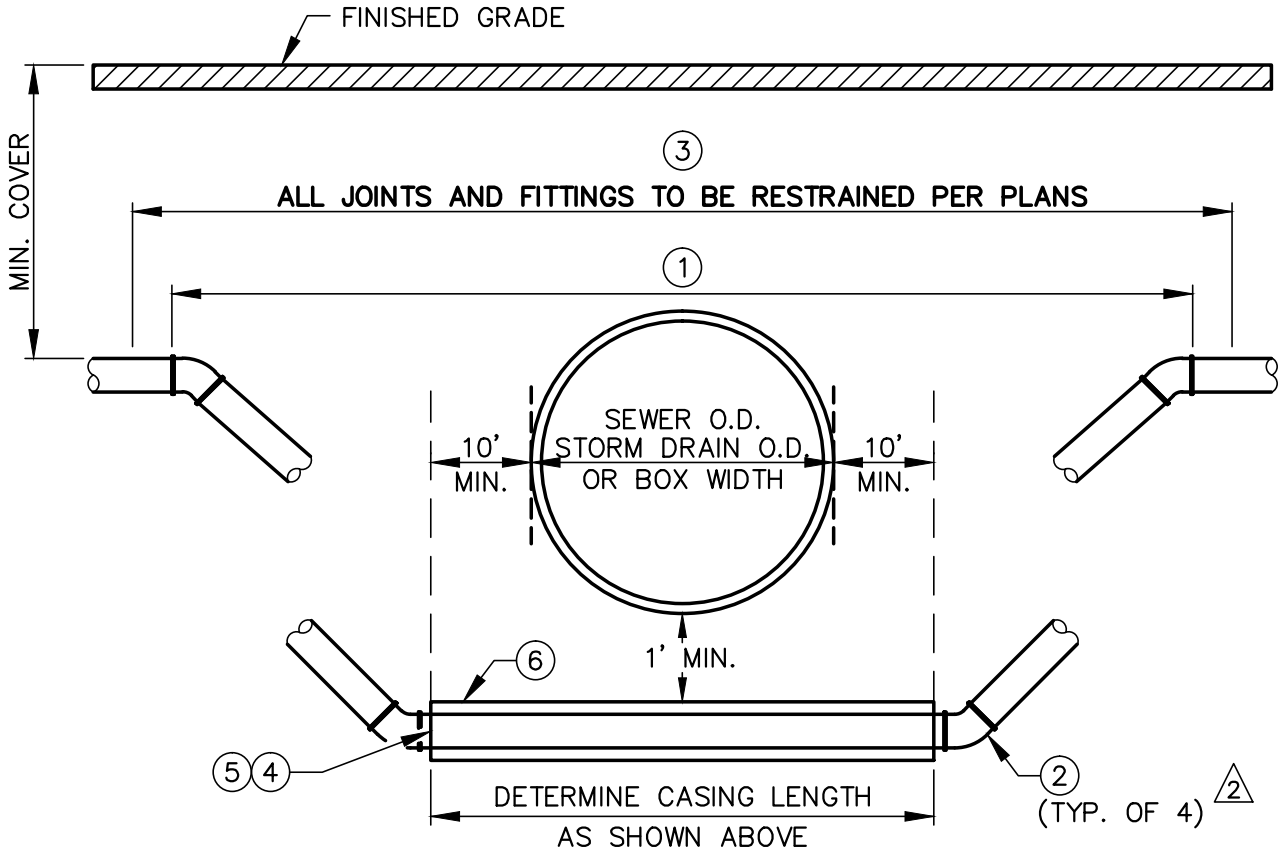


| WATER MAIN SIZE | MIN. SLEEVE SIZE / WALL THKNS | WATER MAIN SIZE | MIN. SLEEVE SIZE / WALL THKNS |
|---|---|---|---|
| 8" | 18" / .25" | 18" | 30" / .25" |
| 12" | 18" / .25" | 20" | 36" / .375" |
| 16" | 30" / .25" | 24" | 36" / .375" |

| ITEM | DESCRIPTION | APPROVED MATERIAL LIST NUMBER |
|---|---|---|
| 1 | DUCTILE IRON PIPE | 1–C |
| 2 | 45° BEND 2 | 6–C |
| 3 | JOINT RESTRAINTS | 5–A, B, C |
| 4 | CASING SPACERS | 8–A |
| 5 | END SEAL | 8–C |
| 6 | STEEL CASING | 8–B |

**CITY OF VICTORVILLE - ENGINEERING DEPARTMENT**

| REV. | DATE | BY | | |
|---|---|---|---|---|
| 2 | 12/18/14 | STAFF | **STEEL SLEEVE / SEWER AND STORM DRAIN UNDERCROSSING** | **W-38** |
| 1 | 8/20/08 | STAFF | BRIAN W. GENGLER, CITY ENGINEER | SHEET 1 OF 1 |

NOTES:

2 A. RP AND PIPING SHALL BE AT LEAST THE SAME DIAMETER AS THE METER.

2 B. PLACE BOTTOM OF VALVE A MINIMUM OF 12" AND A MAXIMUM OF 24" ABOVE FINISHED GRADE. FOLLOW MANUFACTURES SPECIFICATIONS FOR PLACEMENT IN RESIDENTIAL APPLICATIONS.

2 C. CUSTOMER SHALL PROTECT DEVICE FROM FREEZING AND MAINTAIN ACCESS FOR TESTING. ACCESS BOX IS REQUIRED IN RESIDENTIAL APPLICATIONS.

D. RP SHALL BE LOCATED AS CLOSE TO THE METER AS POSSIBLE. LOCATION SHALL BE APPROVED BY INSPECTOR.

E. NO CONNECTIONS OF ANY KIND WILL BE ALLOWED IN THIS AREA. INSPECTION BY THE CITY SHALL TAKE PLACE PRIOR TO BACKFILL.

2 F. RPBD MUST BE TESTED BY A CERTIFIED CITY BACKFLOW TESTER PRIOR TO WATER SERVICE BEING ACTIVATED. A COPY OF THE TEST MUST BE SUBMITTED TO THE INSPECTOR.

2 G. WHEN PRESSURE IS ≥ 100 PSI, A PRESSURE REGULATOR MUST BE INSTALLED.

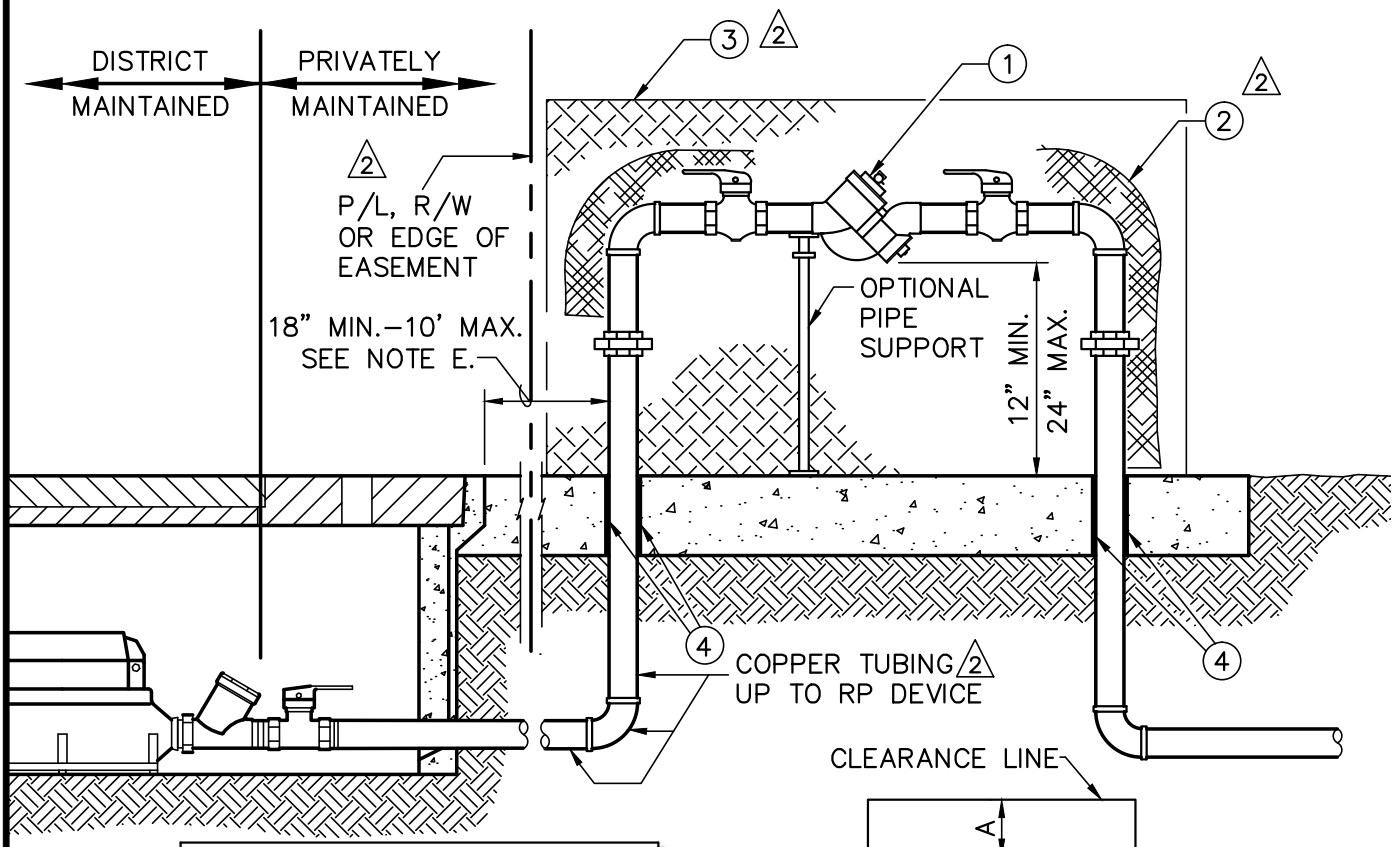


| MINIMUM CLEARANCE | | | |
|---|---|---|---|
| SIZE | A | B | C |
| 3/4" – 2" | 12" | 12" | 12" |

| ITEM | DESCRIPTION | APPROVED MATERIAL LIST NUMBER |
|---|---|---|
| 1 | REDUCED PRESSURE PRINCIPLE BACKFLOW PREVENTION DEVICE | 4–A |
| 2 | INSULATING BAG | 4–B |
| 3 | ALL SPEC BACKFLOW ENCLOSURE | 13–L |
| 4 | BOND BREAKER | 13–E |

| CITY OF VICTORVILLE - ENGINEERING DEPARTMENT | | | | |
|---|---|---|---|---|
| REV. | DATE | BY | 2" AND SMALLER - REDUCED PRESSURE BACKFLOW DEVICE INSTALLATION | W-39 |
| 2 | 12/18/14 | STAFF | | |
| 1 | 8/20/08 | STAFF | BRIAN W. GENGLER, CITY ENGINEER | SHEET 1 OF 1 |

## NOTES:

A. CURRENT (WITHIN 12 MONTHS) TESTING CERTIFICATION FOR RPBD MUST BE AVAILABLE ON JOB SITE AT ALL TIMES WHILE RPBD IS IN USE.

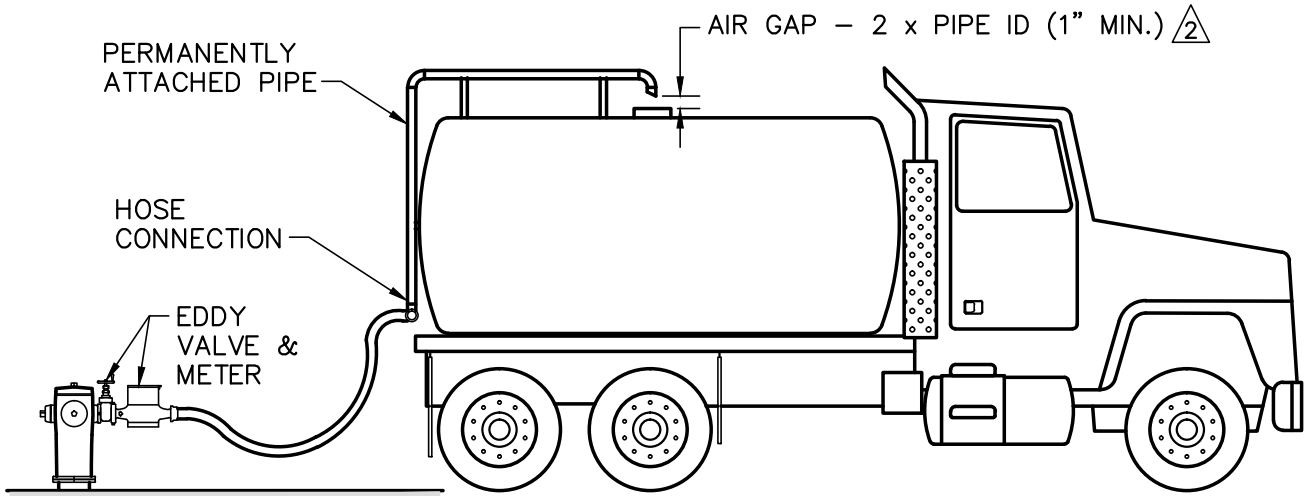


## WITH AIR GAP

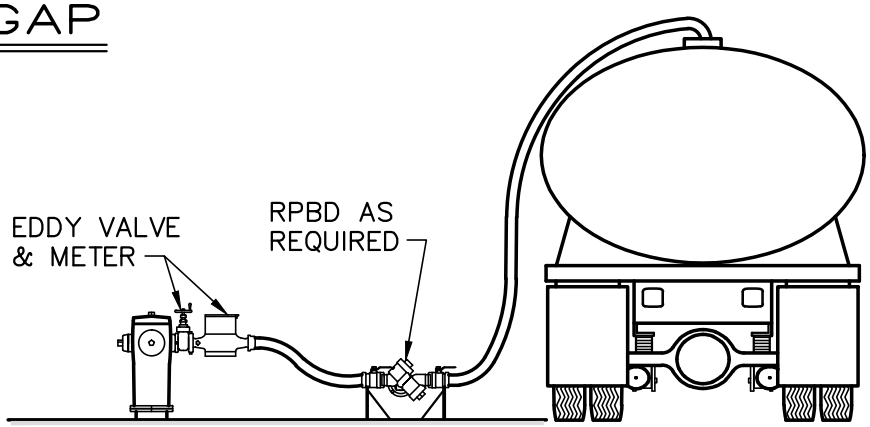


## WITH PORTABLE ASSEMBLY

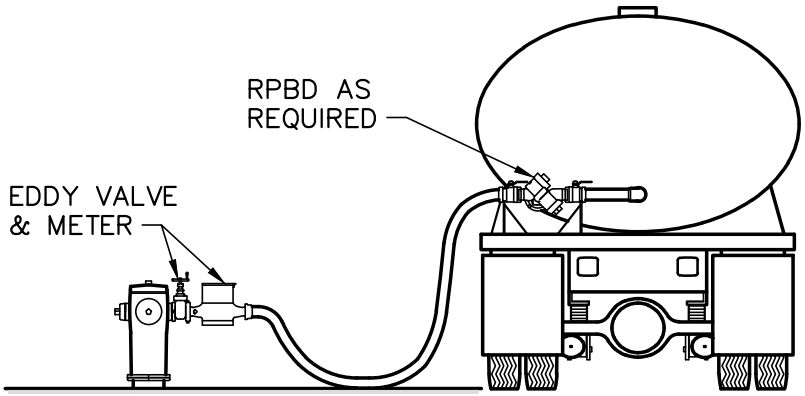


## WITH TRUCK MOUNTED ASSEMBLY

| CITY OF VICTORVILLE - ENGINEERING DEPARTMENT | | | | |
|---|---|---|---|---|
| REV. | DATE | BY | **MINIMUM PROTECTION FOR FILLING WATER TRUCKS** | **W-40** |
| 2 | 12/18/14 | STAFF | | |
| 1 | 8/20/08 | STAFF | BRIAN W. GENGLER, CITY ENGINEER | SHEET 1 OF 1 |

## NOTES:

A. WATER MAINS (4") DIAMETER AND SMALLER SHALL HAVE A SHORT SECTION OF PIPE REMOVED AND PIPE ENDS ENCASED IN CONCRETE.

B. EXISTING MAIN TO BE PLUGGED WITH CONCRETE OR PRESSURE GROUTED AT INTERVALS OF ABOUT 200' OR AS DIRECTED BY THE CITY ENGINEER.

C. EXISTING MAINS 16" AND LARGER REQUIRE THE ENTIRE LENGTH OF THE PIPE TO BE FILLED BY PRESSURE GROUTING OR BY BLOWN SAND.

D. EXISTING VALVES SHALL BE TURNED TO THE CLOSED POSITION. REMOVE VALVE CAN AND REPLACE WITH COMPACTED BACKFILL.

E. PRIOR CITY APPROVAL REQUIRED FOR CUTTING AND PLUGGING.

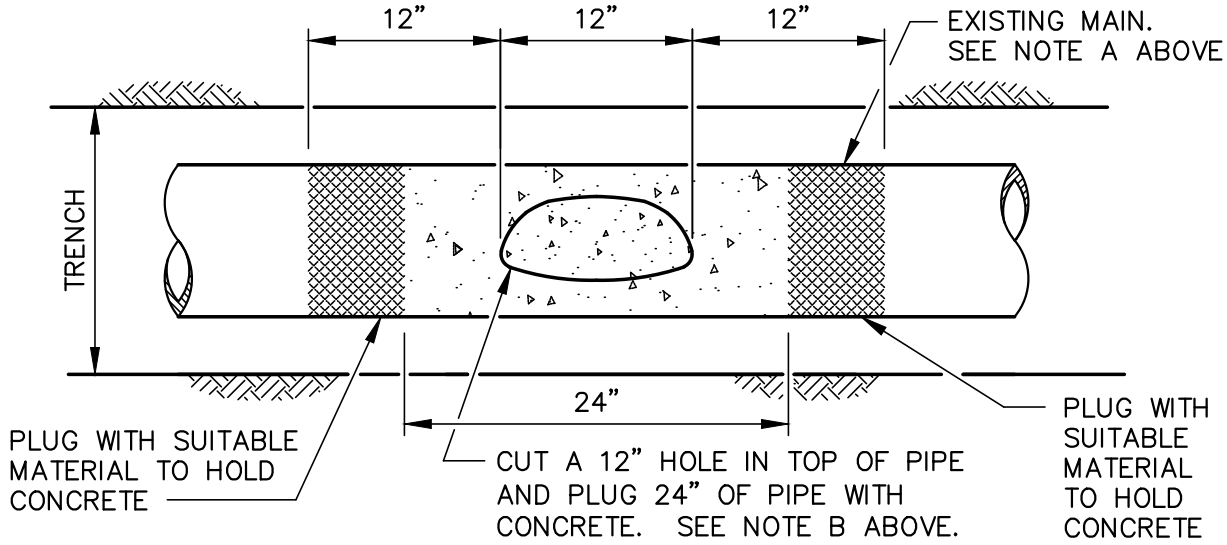


## MIDDLE OF EXISTING MAIN

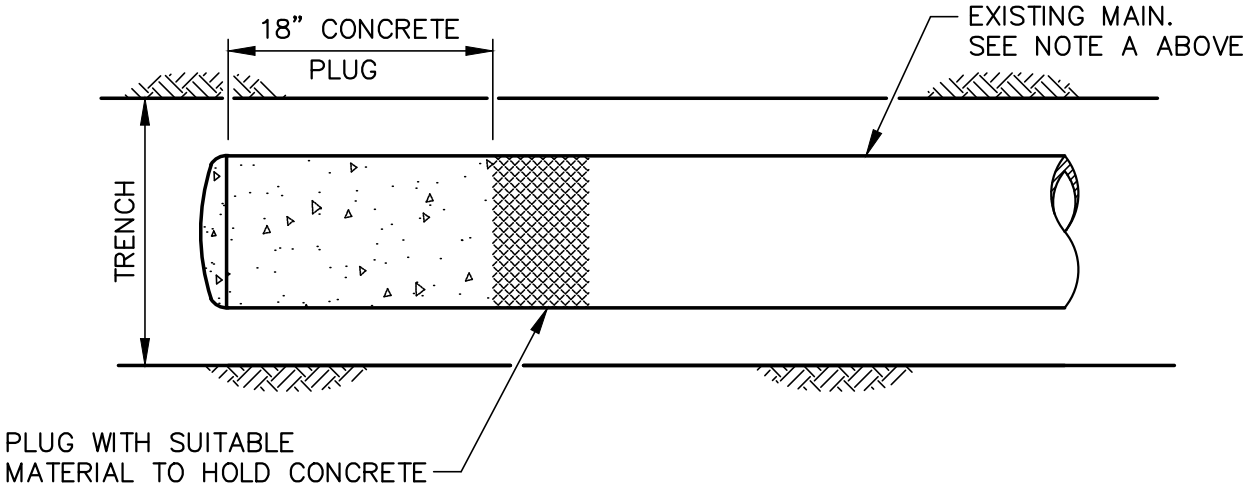


## ENDS OF EXISTING MAIN

LEGEND ON PLANS:

| CITY OF VICTORVILLE - ENGINEERING DEPARTMENT | | | | |
|---|---|---|---|---|
| REV. | DATE | BY | **CUTTING AND PLUGGING ABANDONED WATER MAINS** | **W-41** |
| 2 | 12/18/14 | STAFF | | |
| 1 | 8/20/08 | STAFF | BRIAN W. GENGLER, CITY ENGINEER | SHEET 1 OF 1 |

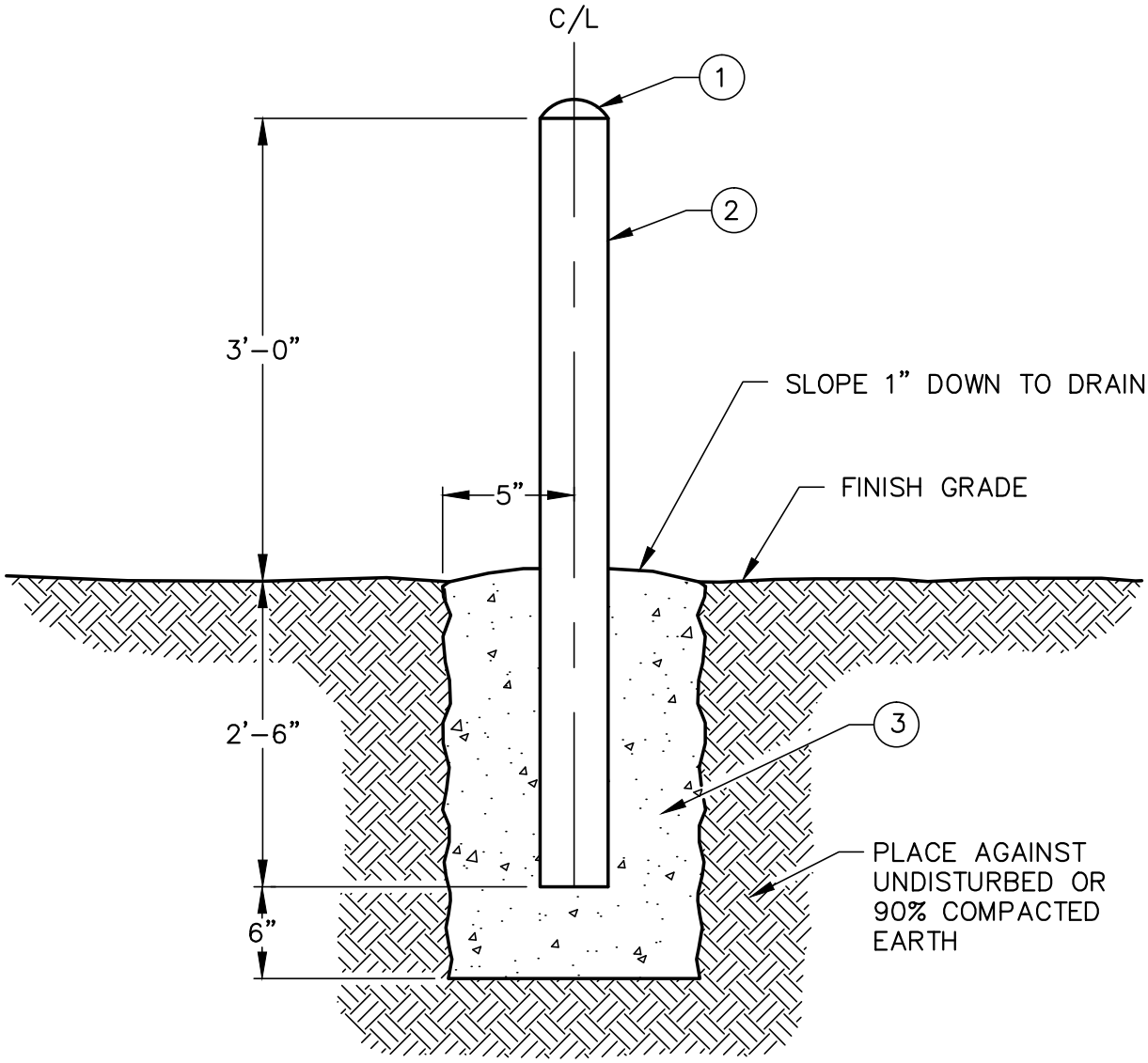


| ITEM | DESCRIPTION | APPROVED MATERIAL LIST NUMBER |
|---|---|---|
| 1 | FILL PIPE WITH CONCRETE & ROUND OVER TO FORM CAP | |
| 2 | 4"ø x 5'6" SCH. 40 GALVANIZED STEEL PIPE – PAINT YELLOW △2 | |
| 3 | CONCRETE FOOTING, 10" DIAMETER | |
| | | |

**CITY OF VICTORVILLE - ENGINEERING DEPARTMENT**

| REV. | DATE | BY | | |
|---|---|---|---|---|
| 2 | 12/18/14 | STAFF | **GUARD POST** | **W-42** |
| 1 | 8/20/08 | STAFF | BRIAN W. GENGLER, CITY ENGINEER | SHEET 1 OF 1 |