STANDARD DRAWINGS

EXPANSION JOINT

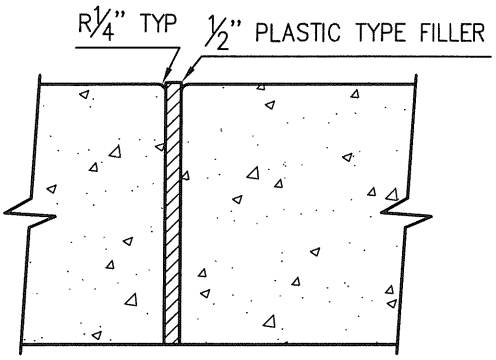

WEAKENED PLANE JOINT

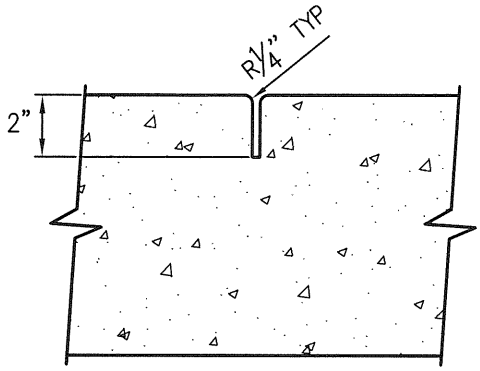

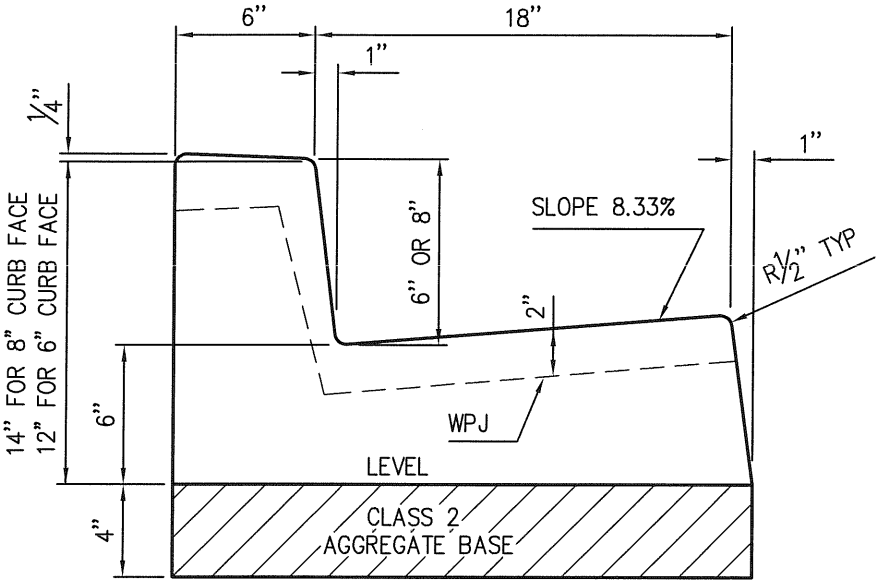

STANDARD CURB & GUTTER

NOT TO SCALE

NOTES:

1. CURB AND GUTTER SHALL BE CONSTRUCTED FROM PORTLAND CEMENT CONCRETE CONTAINING NOT LESS THAN 550 POUNDS OF TYPE II PORTLAND CEMENT PER CUBIC YARD WITH 4% AIR ENTRAINMENT AND 1" MAXIMUM AGGREGATE GRADING.
2. CONCRETE SHALL BE CURED WITH WHITE PIGMENTED CURING COMPOUND.
3. CURB AND GUTTER SHALL BE CONSTRUCTED ON MINIMUM 4" CLASS 2 AGGREGATE BASE COMPACTED TO 95% RELATIVE COMPACTION.
4. WEAKENED PLANE JOINTS SHALL BE CONSTRUCTED AT 10' INTERVALS.
5. WEAKENED PLANE JOINTS SHALL BE AT LEAST 2" DEEP.
6. EXPANSION JOINTS SHALL BE CONSTRUCTED AT ALL CURB RETURNS, DRIVEWAY APPROACHES AND AT 60' INTERVALS.
7. EXPANSION JOINTS SHALL BE 1/2" WIDE AND FILLED WITH PLASTIC TYPE FILLERS.

(NOTES CONTINUE ON SHEET 2)

APPROVED BY CITY ENGINEER		CITY OF VICTORVILLE - ENGINEERING DEPARTMENT	
		STANDARD CURB & GUTTER	S-01
DATE	SIGNATURE		
02/03/09	J. McGlade	JOHN A. McGLADE, CITY ENGINEER	SHEET 1 OF 2

NOTES:

8. IF EXISTING CURB AND GUTTER IS TO BE REMOVED, IT SHALL BE SCORED AT LEAST 1" DEEP WITH A CONCRETE SAW PRIOR TO REMOVAL. IF THE SAWCUT LINE IS CLOSER THAN 2' TO AN EXPANSION JOINT OR WEAKENED PLANE JOINT THE CURB AND GUTTER SHALL BE REMOVED TO THE EXPANSION OR WEAKENED PLANE JOINT.
9. GUTTER SHALL HAVE ROUGH BROOM FINISH WITH 2" SHINER AT FLOW LINE.

APPROVED BY CITY ENGINEER		CITY OF VICTORVILLE - ENGINEERING DEPARTMENT	
DATE	SIGNATURE	STANDARD CURB & GUTTER	S-01
02/03/09	J. McGlade	JOHN A. McGLADE, CITY ENGINEER	SHEET 2 OF 2

EXPANSION JOINT

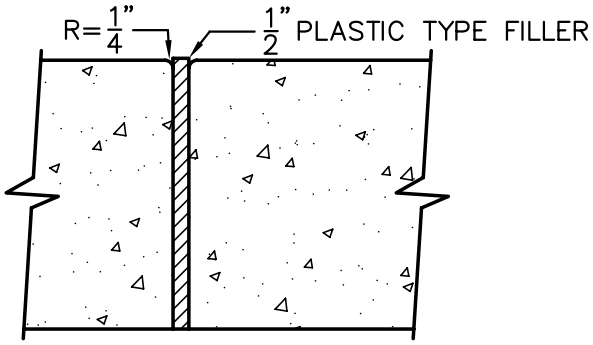

WEAKENED PLANE JOINT

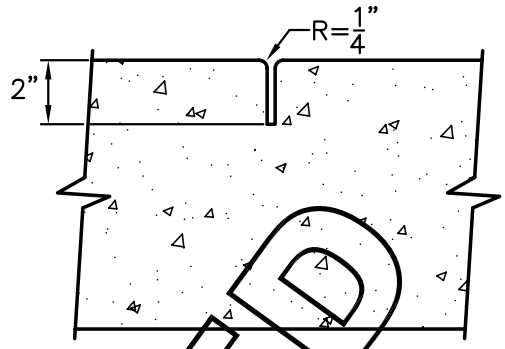

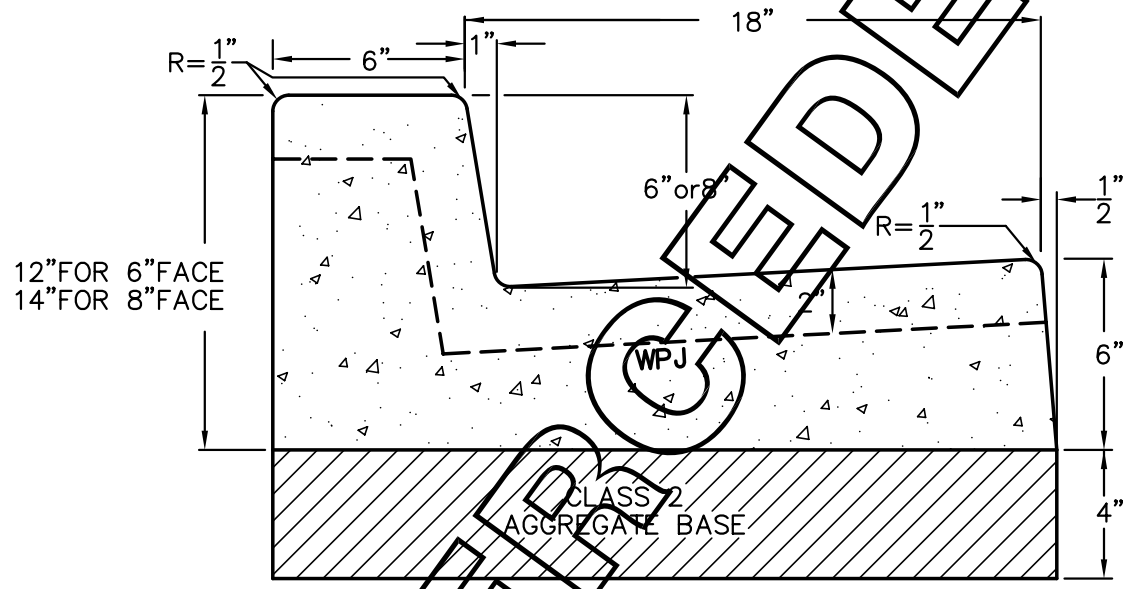

STANDARD CURB & GUTTER

NOT TO SCALE

SUPERSEDED

NOTES:

1. CURB AND GUTTER SHALL BE CONSTRUCTED FROM PORTLAND CEMENT CONCRETE CONTAINING NOT LESS THAN 550 POUNDS OF TYPE II PORTLAND CEMENT PER CUBIC YARD WITH 4% AIR ENTRAINMENT AND 1" MAXIMUM AGGREGATE GRADING.
2. CONCRETE SHALL BE CURED WITH WHITE PIGMENTED CURING COMPOUND.
3. CURB AND GUTTER SHALL BE CONSTRUCTED ON MINIMUM 4" CLASS 2 AGGREGATE BASE COMPACTED TO 95% RELATIVE COMPACTION.
4. WEAKENED PLANE JOINTS SHALL BE CONSTRUCTED AT 10' INTERVALS.
5. WEAKENED PLANE JOINTS SHALL BE AT LEAST 2" DEEP.
6. EXPANSION JOINTS SHALL BE CONSTRUCTED AT ALL CURB RETURNS, DRIVEWAY APPROACHES AND AT 60' INTERVALS.
7. EXPANSION JOINTS SHALL BE 1/2" WIDE AND FILLED WITH PLASTIC TYPE FILLERS.

(NOTES CONTINUE ON SHEET 2)

CITY OF VICTORVILLE - ENGINEERING DEPARTMENT				
REV.	DATE	BY	STANDARD CURB & GUTTER	S-01
	7/12/74	X.X.S.		
1	6/1/07	STAFF	JOHN A. McGLADE, CITY ENGINEER	SHEET 1 OF 2

NOTES:

8. IF EXISTING CURB AND GUTTER IS TO BE REMOVED, IT SHALL BE SCORED AT LEAST 1" DEEP WITH A CONCRETE SAW PRIOR TO REMOVAL. IF THE SAWCUT LINE IS CLOSER THAN 2' TO AN EXPANSION JOINT OR WEAKENED PLANE JOINT THE CURB AND GUTTER SHALL BE REMOVED TO THE EXPANSION OR WEAKENED PLANE JOINT.
9. GUTTER SHALL HAVE ROUGH BROOM FINISH WITH 2" SHINER AT FLOW LINE.

SUPERCEDED

CITY OF VICTORVILLE - ENGINEERING DEPARTMENT				
REV.	DATE	BY	**STANDARD CURB & GUTTER**	**S-01**
	7/12/74	X.X.S.		
1	6/1/07	STAFF	JOHN A. McGLADE, CITY ENGINEER	SHEET 2 OF 2

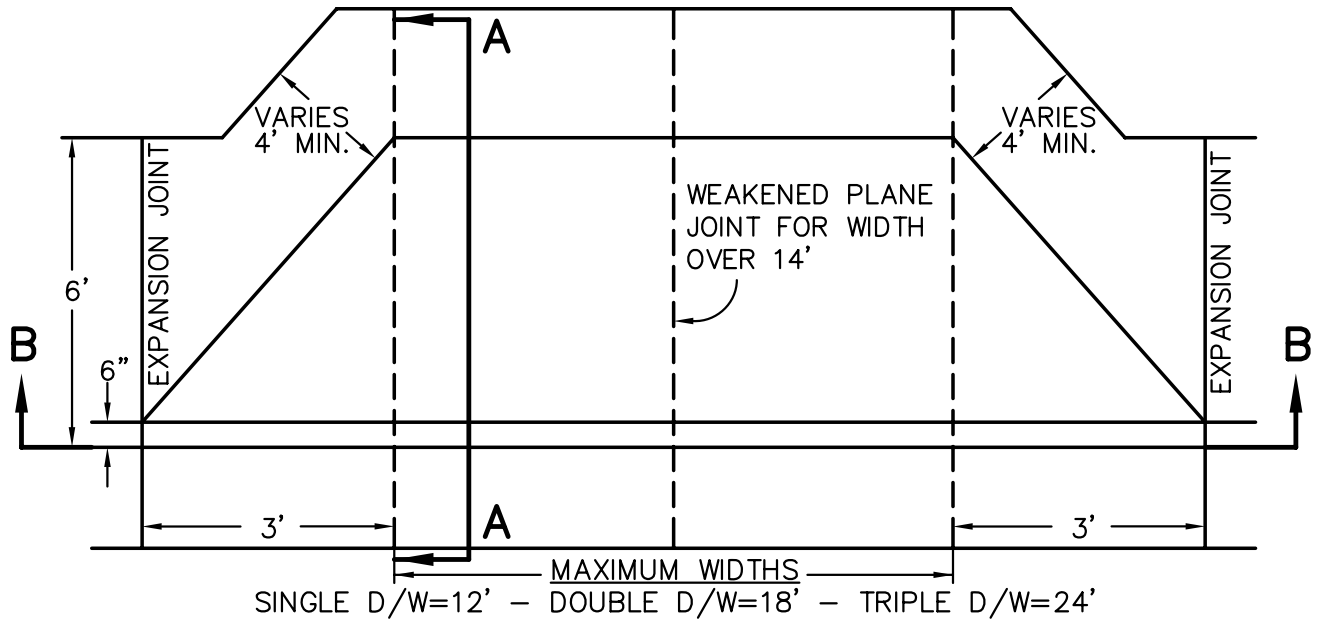

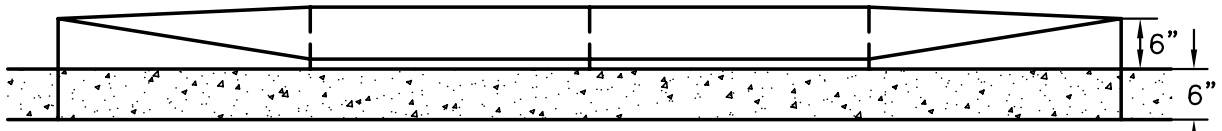

SECTION B–B

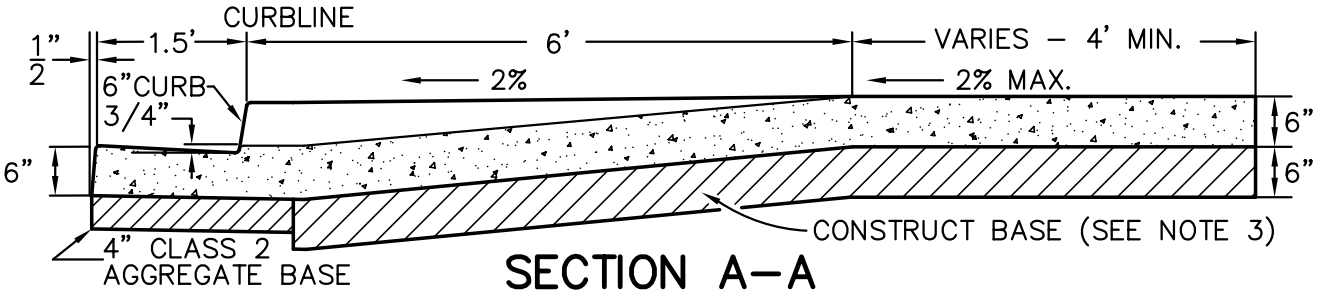

SECTION A–A

(N.T.S.)

NOTES:

1. RESIDENTIAL DRIVE APPROACH SHALL BE CONSTRUCTED FROM PORTLAND CEMENT CONCRETE CONTAINING NOT LESS THAN 550 POUNDS OF TYPE II PORTLAND CEMENT PER CUBIC YARD WITH 4% AIR ENTRAINMENT AND 1" MAXIMUM AGGREGATE GRADING.
2. CONCRETE SHALL BE CURED WITH WHITE PIGMENTED CURING COMPOUND.
3. BASE SHALL CONSIST OF 6" NATIVE MATERIAL (MINIMUM "R" VALUE = 70) COMPACTED TO 90% RELATIVE COMPACTION. IF NATIVE MATERIAL IS CLAY OR CALICHE OR HAS AN "R" VALUE OF LESS THAN 70, CONSTRUCT 6" CLASS II AGGREGATE BASE COMPACTED TO 90% RELATIVE COMPACTION OR AS DIRECTED BY THE CITY ENGINEER.
4. WEAKENED PLANE JOINTS SHALL BE AT LEAST 2" DEEP.
5. EXPANSION JOINTS SHALL BE CONSTRUCTED AT BOTH ENDS OF DRIVEWAY APPROACHES.
6. EXPANSION JOINTS SHALL BE 1/2" WIDE AND FILLED WITH PLASTIC TYPE FILLERS.
7. RESIDENTIAL DRIVE APPROACH SHALL BE ALIGNED WITH GARAGE DOOR(S) OR CARPORT AND BE PERPENDICULAR TO THE CURB. SPECIAL CIRCUMSTANCES MAY APPLY TO THE BULB OF CUL–DE–SACS AND KNUCKLES (SEE S–02A).
8. RESIDENTIAL DRIVE APPROACH SHALL BE MEDIUM BROOM FINISH.

CITY OF VICTORVILLE - ENGINEERING DEPARTMENT				
REV.	DATE	BY	RESIDENTIAL DRIVE APPROACH	S-02
	7/8/74	X.X.S.		
1	7/25/07	STAFF	JOHN A. McGLADE, CITY ENGINEER	SHEET 1 OF 1

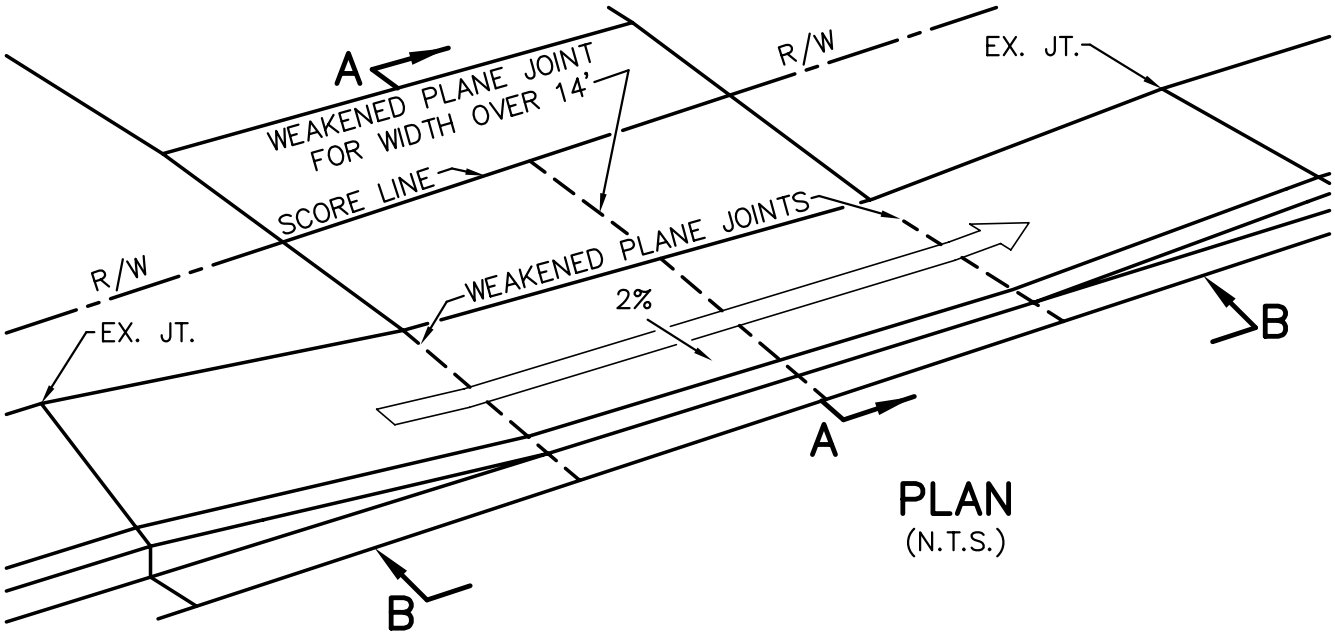

PLAN
(N.T.S.)

SECTION B–B

EXPANSION JOINT

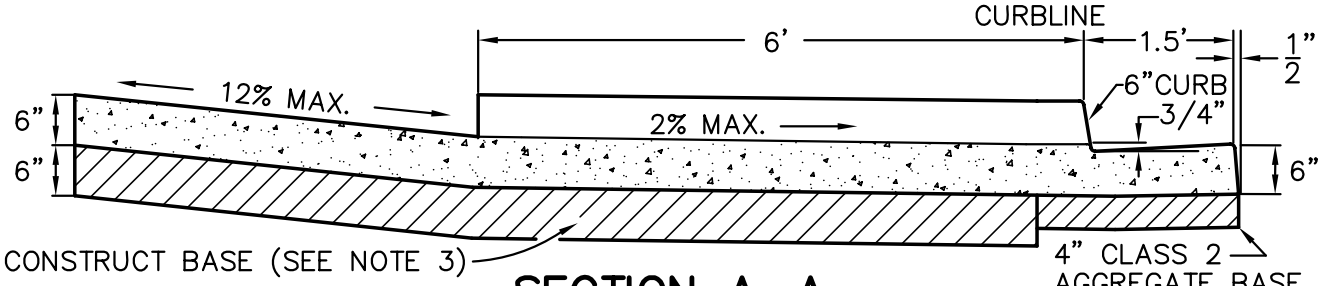

SECTION A–A

NOTES:

1. RESIDENTIAL DRIVE APPROACH SHALL BE CONSTRUCTED FROM PORTLAND CEMENT CONCRETE CONTAINING NOT LESS THAN 550 POUNDS OF TYPE II PORTLAND CEMENT PER CUBIC YARD WITH 4% AIR ENTRAINMENT AND 1" MAXIMUM AGGREGATE GRADING.
2. CONCRETE SHALL BE CURED WITH WHITE PIGMENTED CURING COMPOUND.
3. BASE SHALL CONSIST OF 6" NATIVE MATERIAL (MINIMUM "R" VALUE = 70) COMPACTED TO 90% RELATIVE COMPACTION. IF NATIVE MATERIAL IS CLAY OR CALICHE OR HAS AN "R" VALUE OF LESS THAN 70, CONSTRUCT 6" CLASS II AGGREGATE BASE COMPACTED TO 90% RELATIVE COMPACTION OR AS DIRECTED BY THE CITY ENGINEER.
4. WEAKENED PLANE JOINTS SHALL BE AT LEAST 2" DEEP.
5. EXPANSION JOINTS SHALL BE CONSTRUCTED AT BOTH ENDS OF DRIVEWAY APPROACHES.
6. EXPANSION JOINTS SHALL BE 1/2" WIDE AND FILLED WITH PLASTIC TYPE FILLERS.
7. RESIDENTIAL DRIVE APPROACH SHALL BE ALIGNED WITH GARAGE DOOR(S) OR CARPORT AND BE PERPENDICULAR TO THE CURB.
8. RESIDENTIAL DRIVE APPROACH SHALL BE MEDIUM BROOM FINISH.

CITY OF VICTORVILLE - ENGINEERING DEPARTMENT				
REV.	DATE	BY	RESIDENTIAL DRIVE APPROACH FOR CUL-DE-SAC OR KNUCKLE	S-02A
	7/8/74	X.X.S.		
1	7/25/07	STAFF	JOHN A. McGLADE, CITY ENGINEER	SHEET 1 OF 1

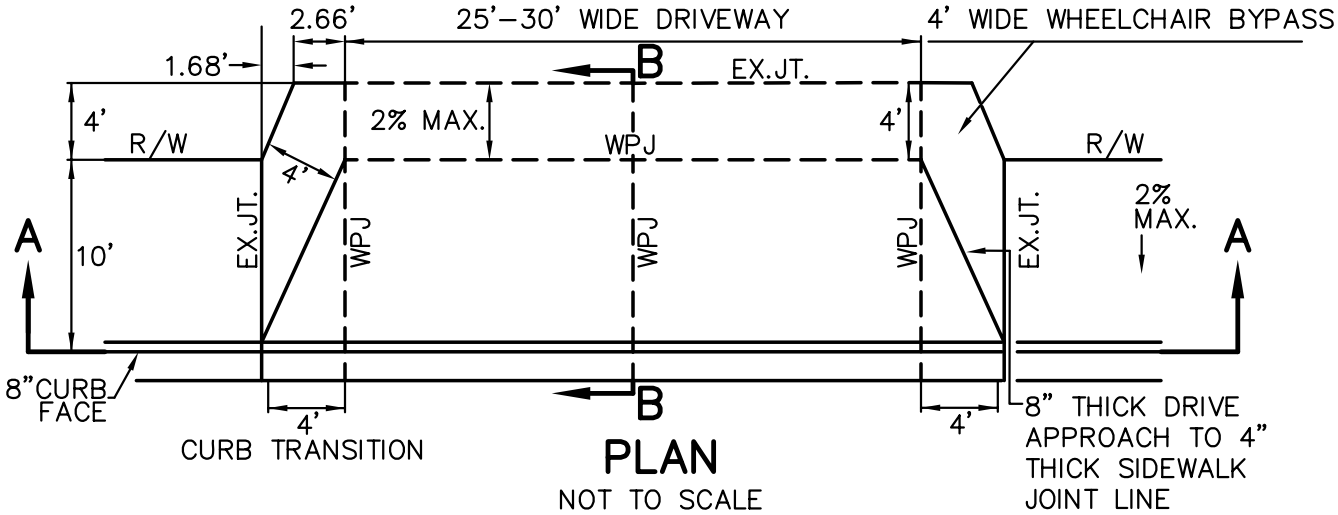

PLAN

NOT TO SCALE

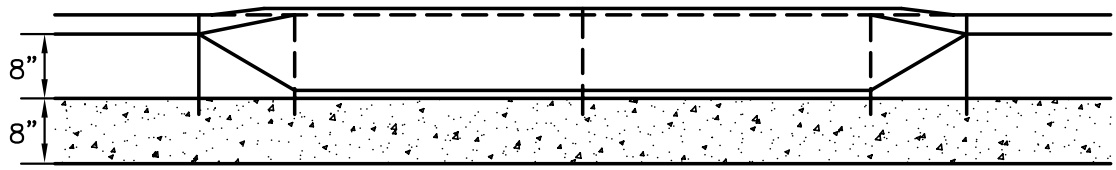

SECTION A–A

NOT TO SCALE

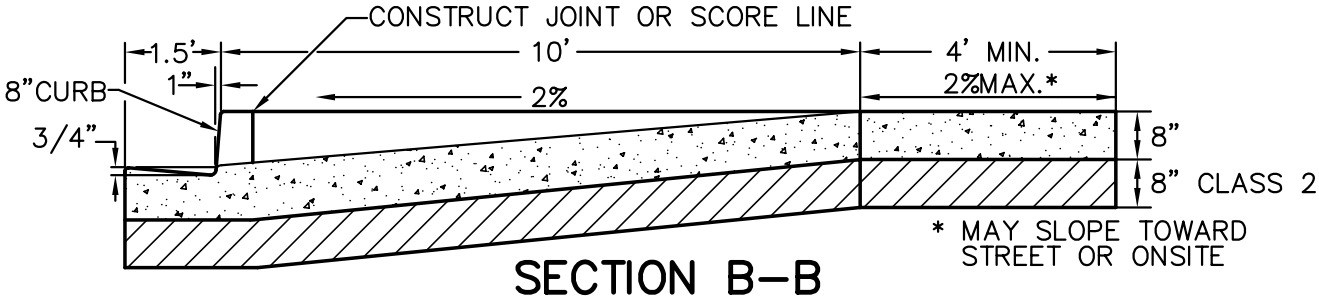

SECTION B–B

NOT TO SCALE

NOTES:

1. COMMERCIAL DRIVE APPROACH SHALL BE CONSTRUCTED FROM PORTLAND CEMENT CONCRETE CONTAINING NOT LESS THAN 550 POUNDS OF TYPE II PORTLAND CEMENT PER CUBIC YARD WITH 4% AIR ENTRAINMENT AND 1" MAXIMUM AGGREGATE GRADING.
2. CONCRETE SHALL BE CURED WITH WHITE PIGMENTED CURING COMPOUND.
3. COMMERCIAL DRIVE APPROACH SHALL BE CONSTRUCTED ON MINIMUM 8" CLASS 2 AGGREGATE BASE COMPACTED TO 95% RELATIVE COMPACTION.
4. WEAKENED PLANE JOINTS SHALL BE AT LEAST 2" DEEP.
5. EXPANSION JOINTS SHALL BE CONSTRUCTED AT BOTH ENDS OF DRIVEWAY APPROACHES.
6. EXPANSION JOINTS SHALL BE 1/2" WIDE AND FILLED WITH PLASTIC TYPE FILLERS.
7. COMMERCIAL DRIVE APPROACH SHALL BE MEDIUM BROOM FINISH.

CITY OF VICTORVILLE - ENGINEERING DEPARTMENT				
REV.	DATE	BY	STANDARD COMMERCIAL DRIVE APPROACH (TYPE 1)	S-03
	2/12/93	D.G.H.		
1	6/1/07	STAFF	JOHN A. McGLADE, CITY ENGINEER	SHEET 1 OF 3

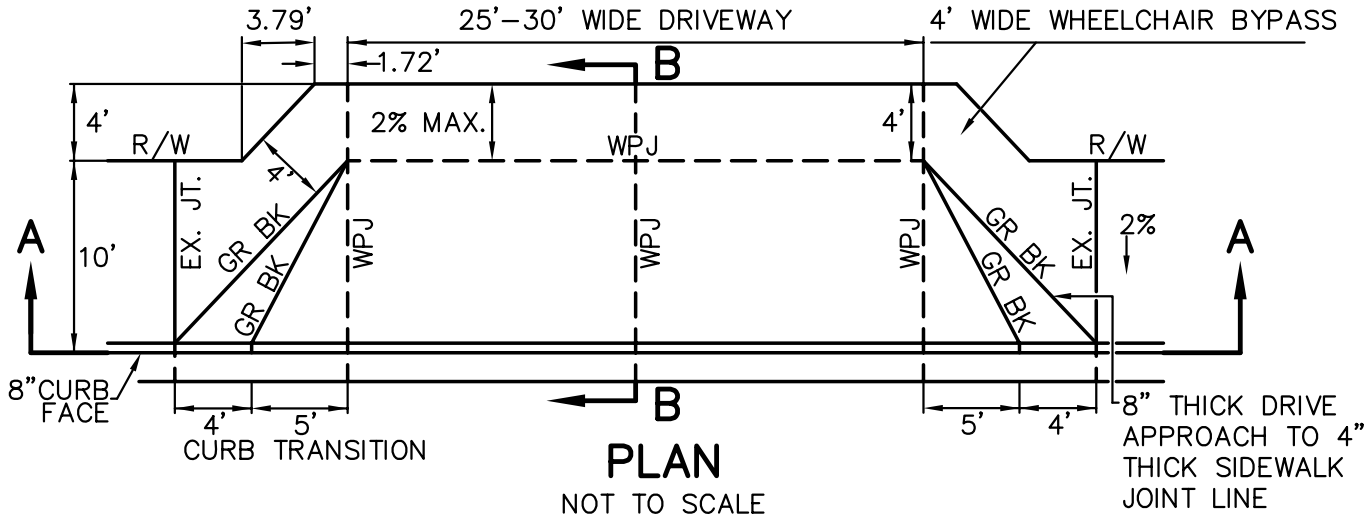

PLAN

NOT TO SCALE

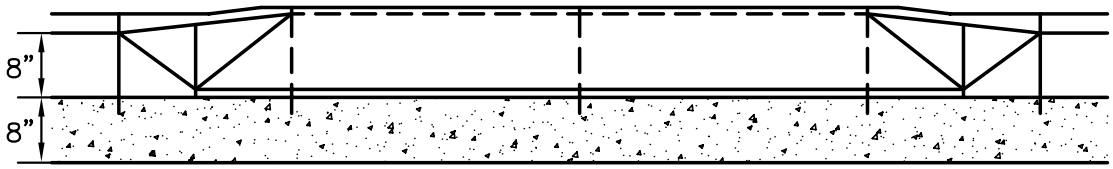

SECTION A–A

NOT TO SCALE

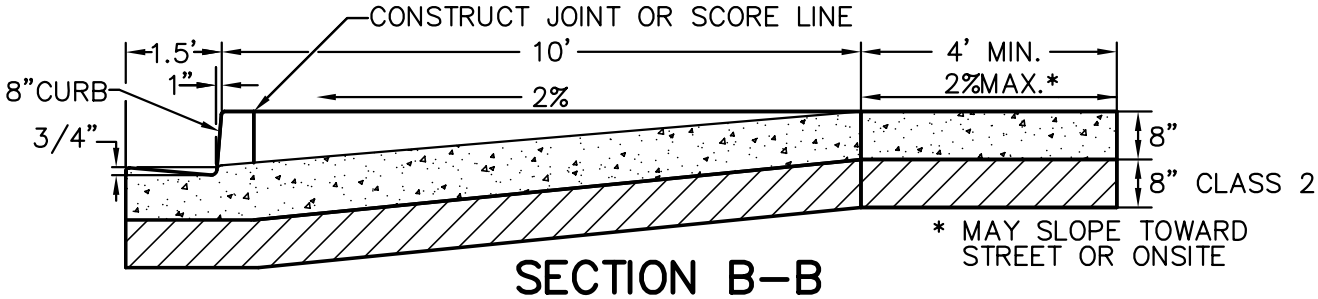

SECTION B–B

NOT TO SCALE

NOTES:

1. COMMERCIAL DRIVE APPROACH SHALL BE CONSTRUCTED FROM PORTLAND CEMENT CONCRETE CONTAINING NOT LESS THAN 550 POUNDS OF TYPE II PORTLAND CEMENT PER CUBIC YARD WITH 4% AIR ENTRAINMENT AND 1" MAXIMUM AGGREGATE GRADING.
2. CONCRETE SHALL BE CURED WITH WHITE PIGMENTED CURING COMPOUND.
3. COMMERCIAL DRIVE APPROACH SHALL BE CONSTRUCTED ON MINIMUM 8" CLASS 2 AGGREGATE BASE COMPACTED TO 95% RELATIVE COMPACTION.
4. WEAKENED PLANE JOINTS SHALL BE AT LEAST 2" DEEP.
5. EXPANSION JOINTS SHALL BE CONSTRUCTED AT BOTH ENDS OF DRIVEWAY APPROACHES.
6. EXPANSION JOINTS SHALL BE 1/2" WIDE AND FILLED WITH PLASTIC TYPE FILLERS.
7. COMMERCIAL DRIVE APPROACH SHALL BE MEDIUM BROOM FINISH.

CITY OF VICTORVILLE - ENGINEERING DEPARTMENT				
REV.	DATE	BY	FLARED CURB COMMERCIAL DRIVE APPROACH (TYPE 2)	S-03
	2/12/93	D.G.H.		
1	7/25/07	STAFF	JOHN A. McGLADE, CITY ENGINEER	SHEET 2 OF 3

R	W**
20'	30'–40'

**MAY BE WIDER WHEN ADDITIONAL LANES ARE JUSTIFIED AND WITH CITY ENGINEER'S APPROVAL

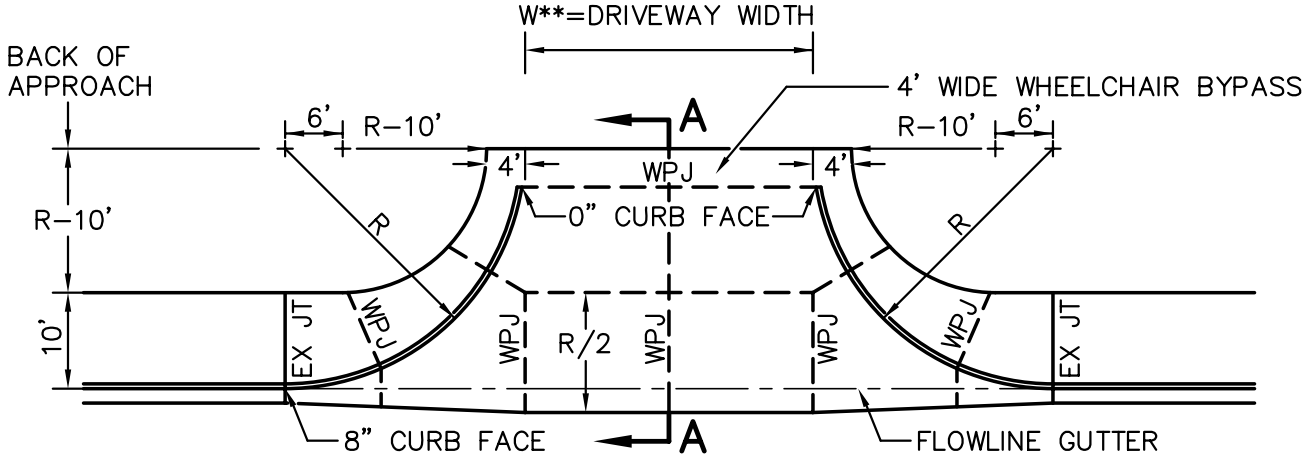

PLAN

NOT TO SCALE

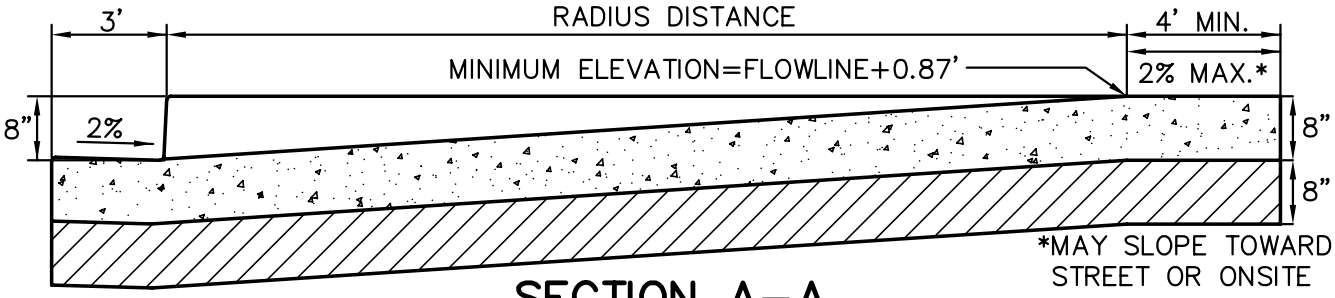

SECTION A–A

NOT TO SCALE

NOTES:

1. COMMERCIAL DRIVE APPROACH SHALL BE CONSTRUCTED FROM PORTLAND CEMENT CONCRETE CONTAINING NOT LESS THAN 550 POUNDS OF TYPE II PORTLAND CEMENT PER CUBIC YARD WITH 4% AIR ENTRAINMENT AND 1" MAXIMUM AGGREGATE GRADING.
2. CONCRETE SHALL BE CURED WITH WHITE PIGMENTED CURING COMPOUND.
3. COMMERCIAL DRIVE APPROACH SHALL BE CONSTRUCTED ON MINIMUM 8" CLASS 2 AGGREGATE BASE COMPACTED TO 95% RELATIVE COMPACTION.
4. WEAKENED PLANE JOINTS SHALL BE AT LEAST 2" DEEP.
5. EXPANSION JOINTS SHALL BE CONSTRUCTED AT BOTH ENDS OF DRIVEWAY APPROACHES.
6. EXPANSION JOINTS SHALL BE 1/2" WIDE AND FILLED WITH PLASTIC TYPE FILLERS.
7. COMMERCIAL DRIVE APPROACH SHALL BE MEDIUM BROOM FINISH.

CITY OF VICTORVILLE - ENGINEERING DEPARTMENT				
REV.	DATE	BY	CURB RETURN COMMERCIAL DRIVE APPROACH (TYPE 3)	S-03
	2/12/93	D.G.H.		
1	6/1/07	STAFF	JOHN A. McGLADE, CITY ENGINEER	SHEET 3 OF 3

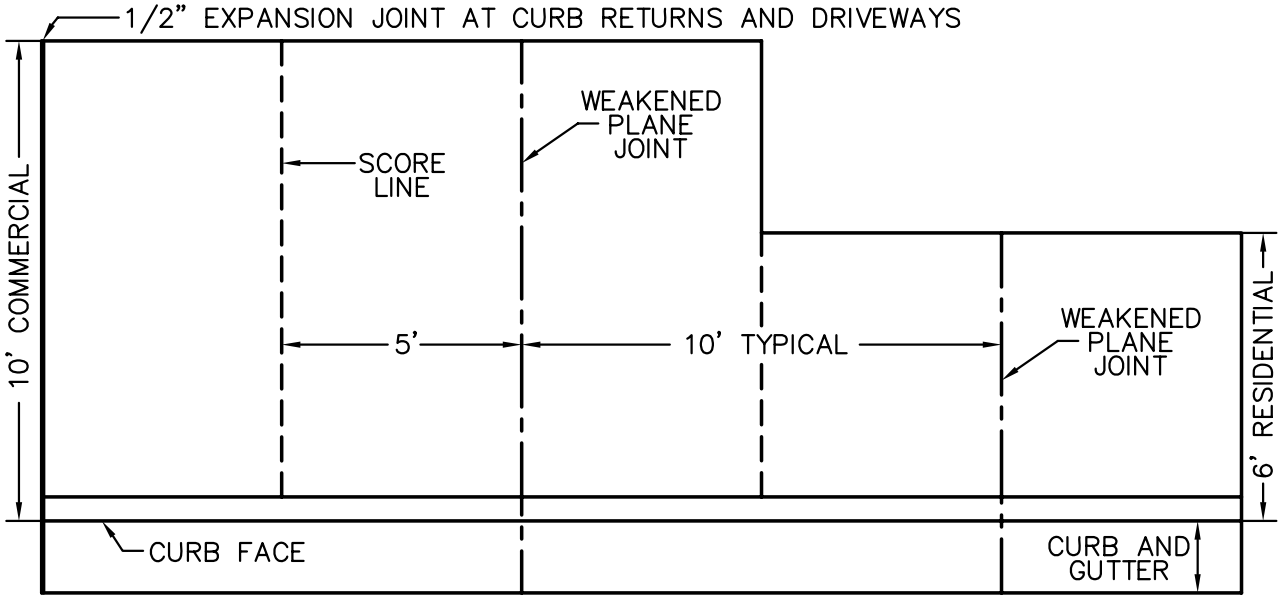

PLAN

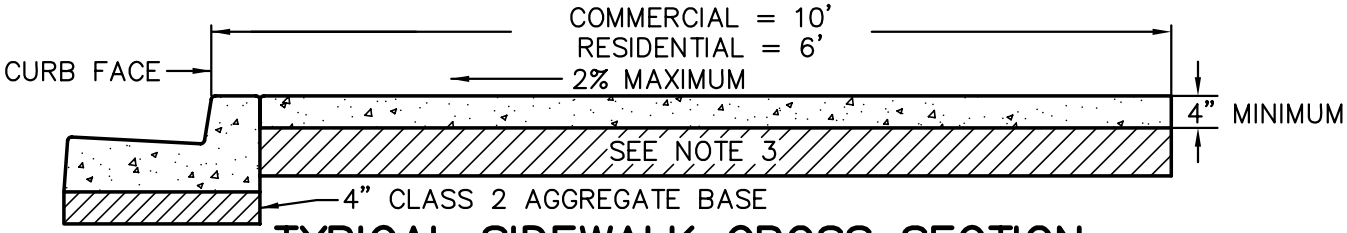

TYPICAL SIDEWALK CROSS SECTION

NOTES:

1. SIDEWALK SHALL BE CONSTRUCTED FROM PORTLAND CEMENT CONCRETE CONTAINING NOT LESS THAN 550 POUNDS OF TYPE II PORTLAND CEMENT PER CUBIC YARD WITH 4% AIR ENTRAINMENT AND 1" MAXIMUM AGGREGATE GRADING.
2. CONCRETE SHALL BE CURED WITH WHITE PIGMENTED CURING COMPOUND.
3. BASE SHALL CONSIST OF 6" NATIVE MATERIAL (MINIMUM "R" VALUE = 70) COMPACTED TO 90% RELATIVE COMPACTION. IF NATIVE MATERIAL IS CLAY OR CALICHE OR HAS AN "R" VALUE OF LESS THAN 70, CONSTRUCT 4" CLASS II AGGREGATE BASE COMPACTED TO 90% RELATIVE COMPACTION OR AS DIRECTED BY THE CITY ENGINEER.
4. ON STRAIGHT RUN SIDEWALK, WEAKENED PLANE JOINTS SHALL BE INSTALLED ON 10' CENTERS. SIDEWALK SHALL BE SCORED ON 5' CENTERS.
5. WEAKENED PLANE JOINTS SHALL BE AT LEAST 2" DEEP.
6. EXPANSION JOINTS SHALL BE CONSTRUCTED AT ALL CURB RETURNS, DRIVEWAY APPROACHES AND AT 60' INTERVALS.
7. EXPANSION JOINTS SHALL BE 1/2" WIDE AND FILLED WITH PLASTIC TYPE FILLERS.
8. IF EXISTING SIDEWALK IS TO BE REMOVED, IT SHALL BE SCORED AT LEAST 1" DEEP WITH A CONCRETE SAW PRIOR TO REMOVAL. IF THE SAWCUT LINE IS CLOSER THAN 2' TO A SCORE LINE, WEAKENED PLANE JOINT OR EXPANSION JOINT, THE REMOVAL SHALL BE AS A PANEL TO THE NEAREST SCORE LINE OR JOINT.
9. SIDEWALK SHALL BE LIGHT BROOM FINISH.
10. SIDEWALK SHALL BE WIDENED LOCALLY TO PROVIDE A MINIMUM OF 4' CLEAR OF OBSTRUCTIONS IN THE SIDEWALK SUCH AS UTILITY POLES, STREET LIGHTS, FIRE HYDRANTS, ETC.

CITY OF VICTORVILLE - ENGINEERING DEPARTMENT				
REV.	DATE	BY	STANDARD COMMERCIAL AND RESIDENTIAL SIDEWALK	S-04
	12/21/88	C.M.D.		
1	7/25/07	STAFF	JOHN A. McGLADE, CITY ENGINEER	SHEET 1 OF 1

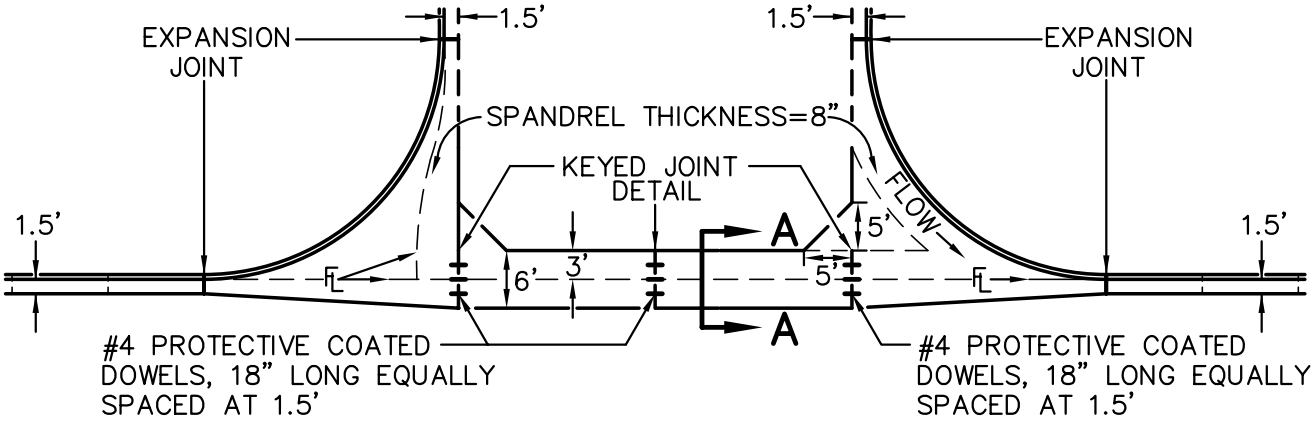

CROSS GUTTER

NOT TO SCALE

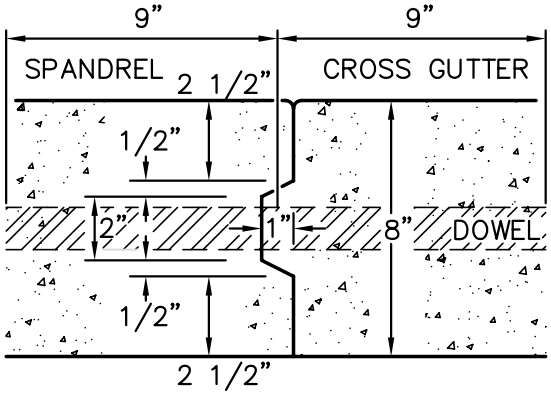

KEYED JOINT DETAIL

NOT TO SCALE

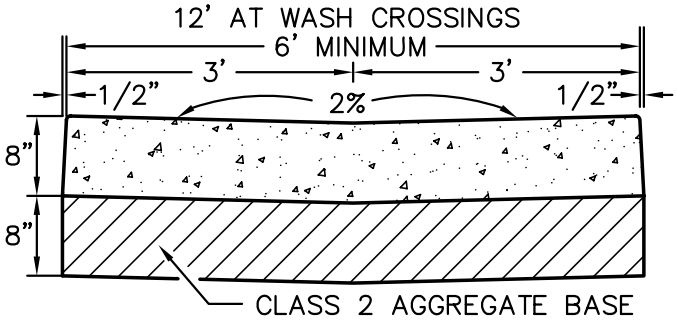

SECTION A–A

NOT TO SCALE

NOTES:

1. CROSS GUTTER SHALL BE CONSTRUCTED FROM PORTLAND CEMENT CONCRETE CONTAINING NOT LESS THAN 550 POUNDS OF TYPE II PORTLAND CEMENT PER CUBIC YARD WITH 4% AIR ENTRAINMENT AND 1" MAXIMUM AGGREGATE GRADING.
2. CONCRETE SHALL BE CURED WITH WHITE PIGMENTED CURING COMPOUND.
3. CROSS GUTTER SHALL BE CONSTRUCTED ON MINIMUM 8" CLASS 2 AGGREGATE BASE COMPACTED TO 95% RELATIVE COMPACTION.
4. CROSS GUTTER SHALL BE ROUGH BROOM FINISH.

CITY OF VICTORVILLE - ENGINEERING DEPARTMENT				
REV.	DATE	BY	**STANDARD CROSS GUTTER**	**S-05**
	7/3/74	X.X.S.		
1	6/1/07	STAFF	JOHN A. McGLADE, CITY ENGINEER	SHEET 1 OF 1

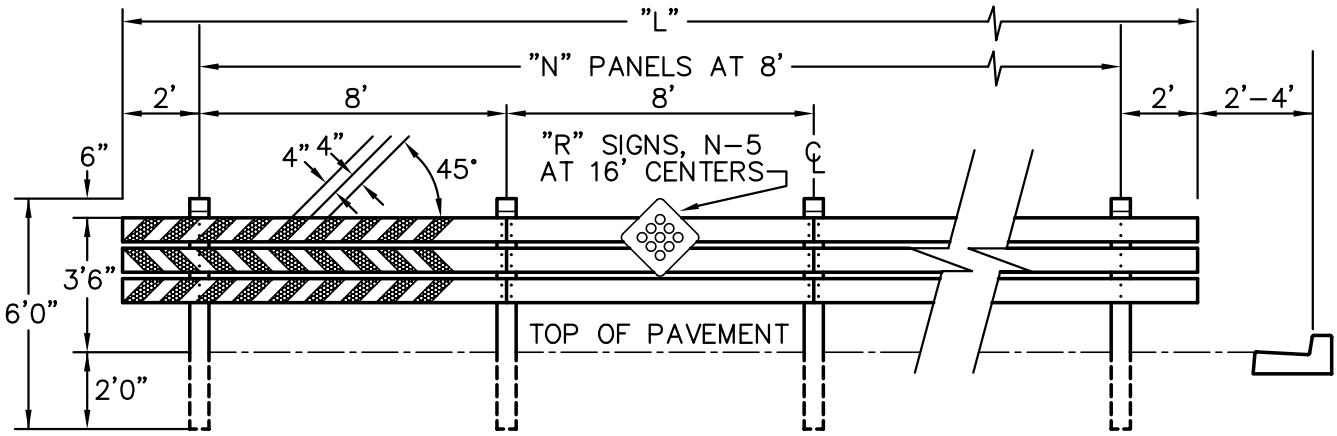

ELEVATION

NOT TO SCALE

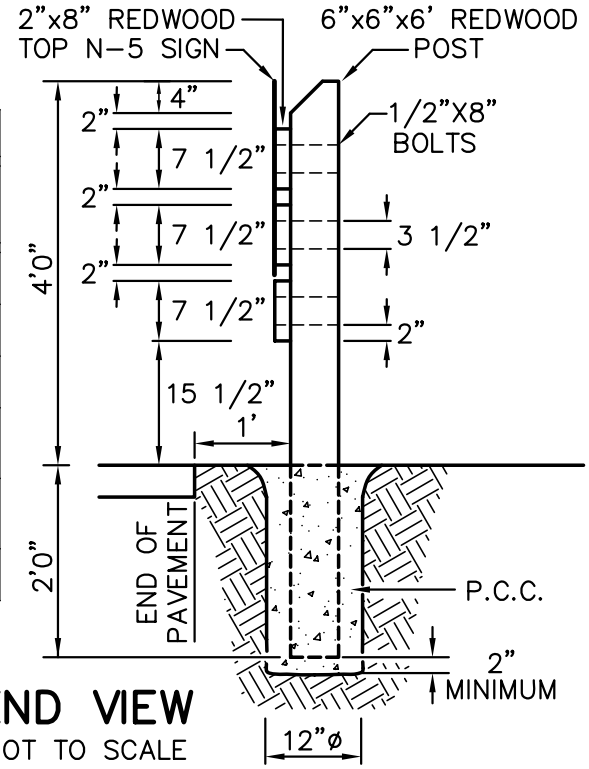

END VIEW

NOT TO SCALE

TABLE OF BARRICADES				
ROADWAY TYPE	WIDTH FEET	# SECTIONS "N"	LENGTH* "L"	REFLECTORS "R"
LOCAL ST.	40'	4	36'	2
COLLECTOR	44'	4	36'	2
ARTERIAL	64'	7	60'	3
MAJOR ARTERIAL	80'	9	76'	4
SUPER ARTERIAL	104'	12	100'	6
PARKWAY	80'	9	76'	4

*OR AS SHOWN ON PLANS AND DIRECTED BY THE CITY ENGINEER.

NOTES:

1. BARRICADES SHALL BE CONSTRUCTED WITH REDWOOD PER THE DETAILS. HARDWARE SHALL BE CADMIUM PLATED WITH 2 EACH 1/2"X8" LONG BOLTS WITH WASHERS ON BOTH SIDES AND NUTS TO FASTEN EACH END OF 2"X8" BOARD TO POSTS.
2. REDWOOD POSTS TO BE SET IN 12" HOLES BACKFILLED WITH CLASS C, CONCRETE (4 SACKS PER CUBIC YARD) TO GRADE.
3. MUSHROOM THREADED BOLT ENDS TO PREVENT TAMPERING.
4. ALL EXPOSED WOOD SHALL BE PRIMED AND PAINTED WITH A LATEX-BASE WHITE PAINT. PAINT SHALL CONFORM TO CALTRANS SECTION 91-3. REFLECTIVE TAPE SHALL BE USED ON THE FACE FOR THE ORANGE AND WHITE STRIPING AS SHOWN.
5. N-5 SIGNS SHALL USE REFLECTIVE TAPE INSTEAD OF REFLECTORS.

CITY OF VICTORVILLE - ENGINEERING DEPARTMENT				
REV.	DATE	BY	**BARRICADE DETAILS**	**S-06**
	12/11/89	R.D.		
1	6/1/07	STAFF	JOHN A. McGLADE, CITY ENGINEER	SHEET 1 OF 1

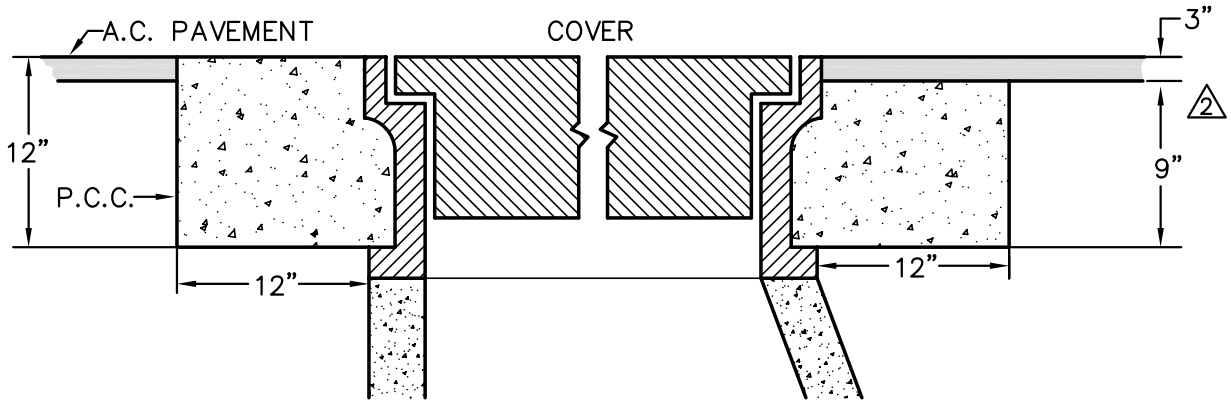

MANHOLE

NOT TO SCALE

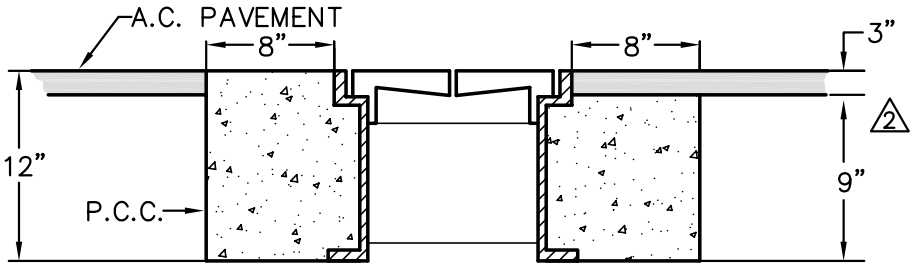

CLEAN–OUT

NOT TO SCALE

NOTES:

1. CONCRETE SHALL CONTAIN NOT LESS THAN 550 POUNDS OF CEMENTITIOUS MATERIAL PER CUBIC YARD WITH 4% AIR ENTRAINMENT. 1
2. MANHOLE AND CLEAN–OUT FRAMES SHALL BE ADJUSTED TO GRADE AFTER PLACING SURFACE COURSE OF ASPHALT CONCRETE OR, IF A.C. CAP IS TO BE PLACED OVER CONCRETE RING, THE FRAMES SHALL BE ADJUSTED TO GRADE PRIOR TO PLACING A.C. SURFACE COURSE. FRAMES IN P.C.C. PAVEMENT SHALL BE ADJUSTED TO GRADE JUST PRIOR TO P.C.C. PLACEMENT. 2
3. MANHOLE AND CLEAN–OUT FRAMES SHALL NOT BE MORE THAN 1/4" OUT OF LEVEL WITH PAVEMENT SURFACE.
4. WHEN ADJUSTING MANHOLE OR CLEAN–OUT TO GRADE THE CONTRACTOR SHALL NOT INTERRUPT THE SERVICE FUNCTION OF THE LINE UNLESS OTHERWISE APPROVED BY THE ENGINEER PRIOR TO SUCH WORK. FURTHER THE CONTRACTOR SHALL IMPLEMENT MEASURES TO PREVENT DEBRIS AND FOREIGN MATERIALS FROM ENTERING THE PIPELINE SYSTEM. 3

REV.	DATE	BY
	10/2/68	M.A.T.
1	7/74	X.X.S.
2	4/5/93	D.G.H.
3	9/9/96	J.A.M.
4	7/25/07	STAFF

CITY OF VICTORVILLE - ENGINEERING DEPARTMENT

STANDARD MANHOLE / CLEAN-OUT FRAME AND COVER INSTALLATION

S-07

JOHN A. McGLADE, CITY ENGINEER

SHEET 1 OF 1

BLANK INTENTIONALLY

CITY OF VICTORVILLE - ENGINEERING DEPARTMENT				
REV.	DATE	BY	SLOTTED CROSS GUTTER	S-08
	7/11/74	X.X.S.		
1	6/1/07	STAFF	JOHN A. McGLADE, CITY ENGINEER	SHEET 1 OF 1

OBSOLETE

EXPANSION JOINT

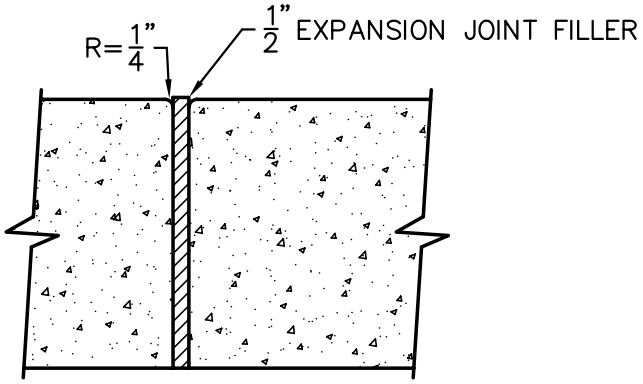

WEAKENED PLANE JOINT

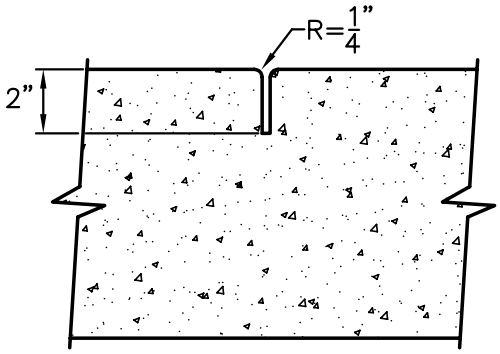

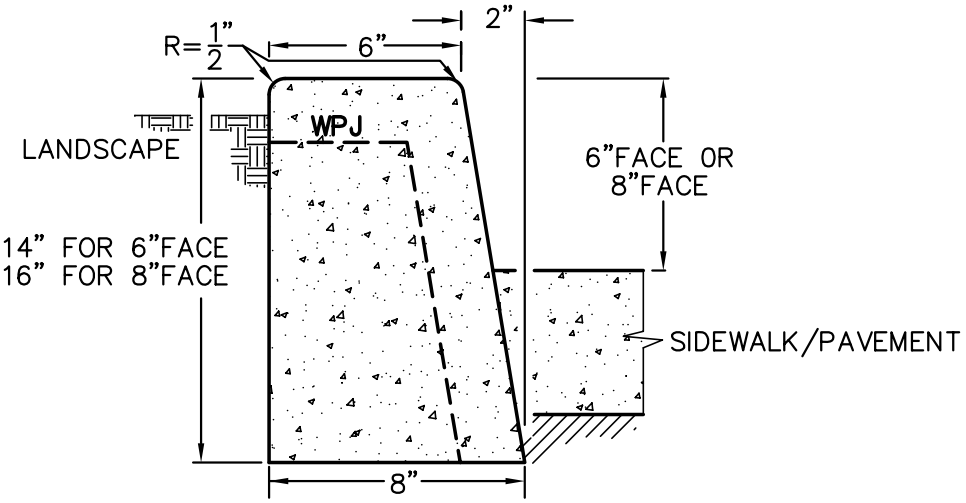

STANDARD CURB

NOT TO SCALE

NOTES:

1. CURB SHALL BE CONSTRUCTED FROM PORTLAND CEMENT CONCRETE CONTAINING NOT LESS THAN 550 POUNDS OF TYPE II PORTLAND CEMENT PER CUBIC YARD WITH 4% AIR ENTRAINMENT AND 1" MAXIMUM AGGREGATE GRADING.
2. CONCRETE SHALL BE CURED WITH WHITE PIGMENTED CURING COMPOUND.
3. WHEN USED ADJACENT TO VEHICULAR TRAFFIC, CURB SHALL BE CONSTRUCTED ON MINIMUM 4" CLASS 2 AGGREGATE BASE COMPACTED TO 95% RELATIVE COMPACTION.
4. WEAKENED PLANE JOINTS SHALL BE CONSTRUCTED AT 10' INTERVALS.
5. WEAKENED PLANE JOINTS SHALL BE AT LEAST 2" DEEP.
6. EXPANSION JOINTS SHALL BE CONSTRUCTED AT ALL CURB RETURNS, DRIVEWAY APPROACHES AND AT 60' INTERVALS.
7. EXPANSION JOINTS SHALL BE 1/2" WIDE AND FILLED WITH PLASTIC TYPE FILLERS.
8. IF EXISTING CURB IS TO BE REMOVED, IT SHALL BE SCORED AT LEAST 1" DEEP WITH A CONCRETE SAW PRIOR TO REMOVAL. IF THE SAWCUT LINE IS CLOSER THAN 2' TO A WEAKENED PLANE JOINT OR EXPANSION JOINT, THE CURB SHALL BE REMOVED TO THE WEAKENED PLANE JOINT OR EXPANSION JOINT.

CITY OF VICTORVILLE - ENGINEERING DEPARTMENT				
REV.	DATE	BY	**STANDARD CURB**	**S-09**
	7/8/74	X.X.S.		
1	6/1/07	STAFF	JOHN A. McGLADE, CITY ENGINEER	SHEET 1 OF 1

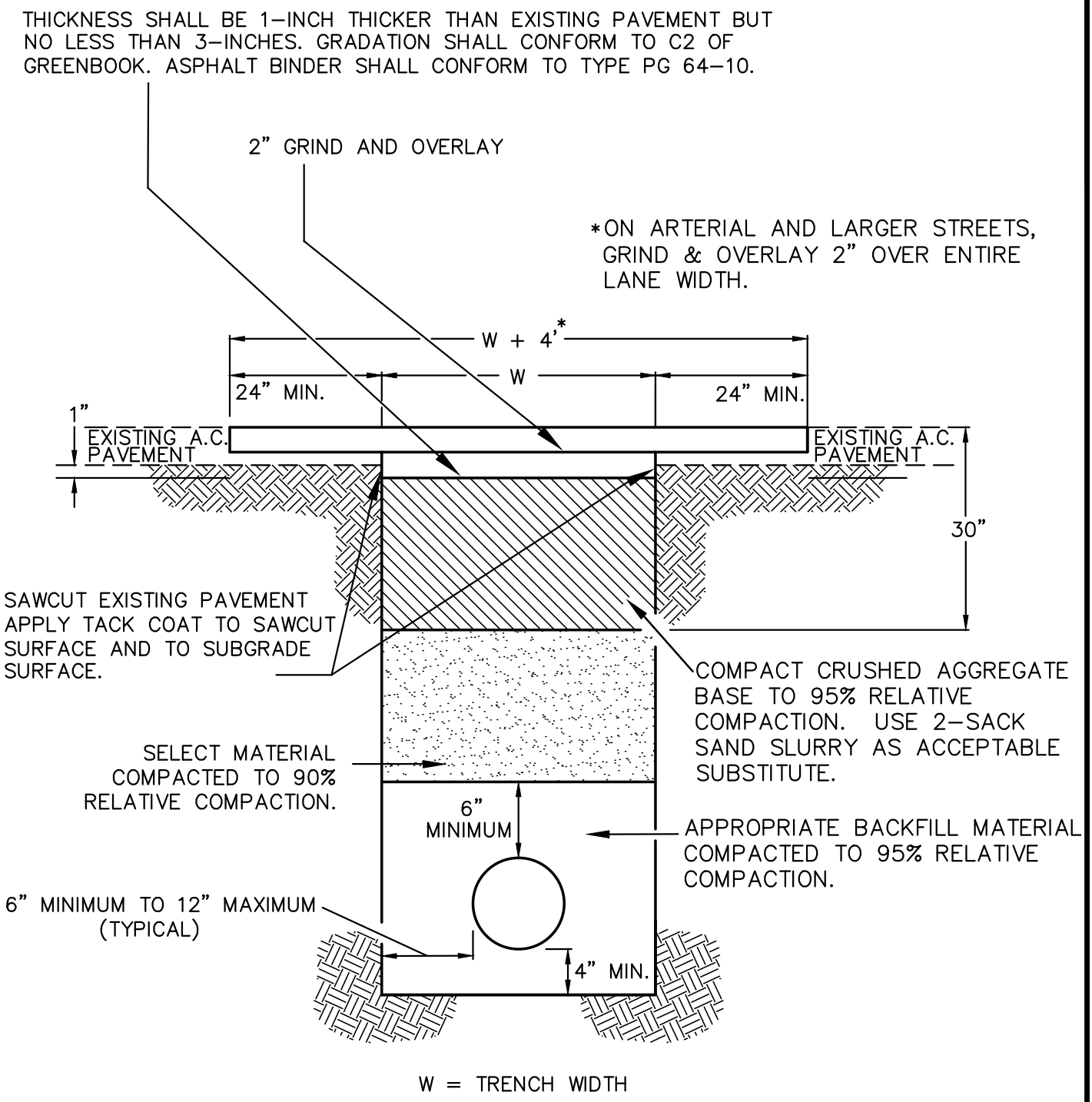

W = TRENCH WIDTH

TYPICAL SECTION

NOT TO SCALE

CITY OF VICTORVILLE - ENGINEERING DEPARTMENT				
REV.	DATE	BY	**TRENCH BACKFILL AND PAVEMENT REPAIRS**	**S-10**
2	5/16/16	STAFF		
1	2/3/09	STAFF	BRIAN W. GENGLER, CITY ENGINEER	SHEET 1 OF 2

NOTES:

1. ALL EXCAVATIONS WITHIN THE CITY RIGHT–OF–WAY REQUIRE AN EXCAVATION PERMIT FROM THE ENGINEERING DEPARTMENT.
2. NOTIFY UNDERGROUND SERVICE ALERT (DigAlert) 2 WORKING DAYS PRIOR TO START OF EXCAVATION AT 1–800–227–2600.
3. NOTIFY ENGINEERING DEPARTMENT 1 WORKING DAY (24 HOURS) PRIOR TO START OF CONSTRUCTION TO ARRANGE INSPECTIONS BY CITY PUBLIC WORKS INSPECTORS.
4. ALL EXCAVATIONS SHALL BE MADE, PROTECTED AND SUPPORTED AS REQUIRED FOR SAFETY AS PRESCRIBED BY CAL OSHA.
5. TEMPORARY PAVING SHALL BE 2 SACK SAND SLURRY OR 2 INCH THICKNESS TEMPORARY ASPHALT OVER COMPACTED SUBGRADE TO TOP OF PAVEMENT TO PROVIDE A SAFE AND SMOOTH TRAVELED SURFACE. PERMANENT PAVING SHALL BE PLACED WITHIN 7 DAYS OF EXCAVATION. SEAL COAT PAVEMENT 6 INCHES BEYOND PAVEMENT REPAIR AREA.
6. ANY STREET PAVED OR RESURFACED IN THE PREVIOUS 36 MONTHS THAT IS TRENCHED FOR 300 FEET OR MORE IN A TRAVELED LANE OR EXTENDS MORE THAN 7 FEET FROM THE CURB FACE / EDGE OF PAVEMENT OR HAS MORE THAN 3 CROSS TRENCHES IN 300 FEET SHALL BE OVERLAID AS DIRECTED BY THE ENGINEER WITH A SELF PROPELLED PAVING MACHINE PER CALTRANS SECTION 39.
7. POT HOLES AND/OR NARROW TRENCH CUTS SHALL NOT BE ALLOWED IN P.C.C. IMPROVEMENTS. P.C.C. SHALL BE SAWCUT, REMOVED AND RECONSTRUCTED IN PANELS AT THE SCORE LINES, OR WEAKENED PLANE JOINTS, OR AT LEAST 10 FEET WIDE AND AS DIRECTED BY THE ENGINEER IN THE FIELD.
8. IF THE EDGE OF THE TRENCH REPAIR (W+4 FEET) IS 2 FEET OR LESS FROM THE LIP OF THE GUTTER OR 3' OR LESS FROM THE EDGE OF PAVEMENT, THE EXISTING PAVEMENT SHALL BE REMOVED AND REPLACED PER THE TYPICAL SECTION.
9. FOR NOMINAL PIPE DIAMETERS OF 12" OR LESS, TYPICAL COVER IS 36" UNLESS CIRCUMSTANCES WARRANT DIFFERENTLY OR OTHERWISE APPROVED BY THE CITY ENGINEER.
10. 2 SACK SAND SLURRY BACKFILL FOR STREETS PAVED OR RESURFACED IN THE PREVIUOS PREVIOUS 36 MONTHS BETWEEN SUBGRADE AND THE PIPE ZONE.

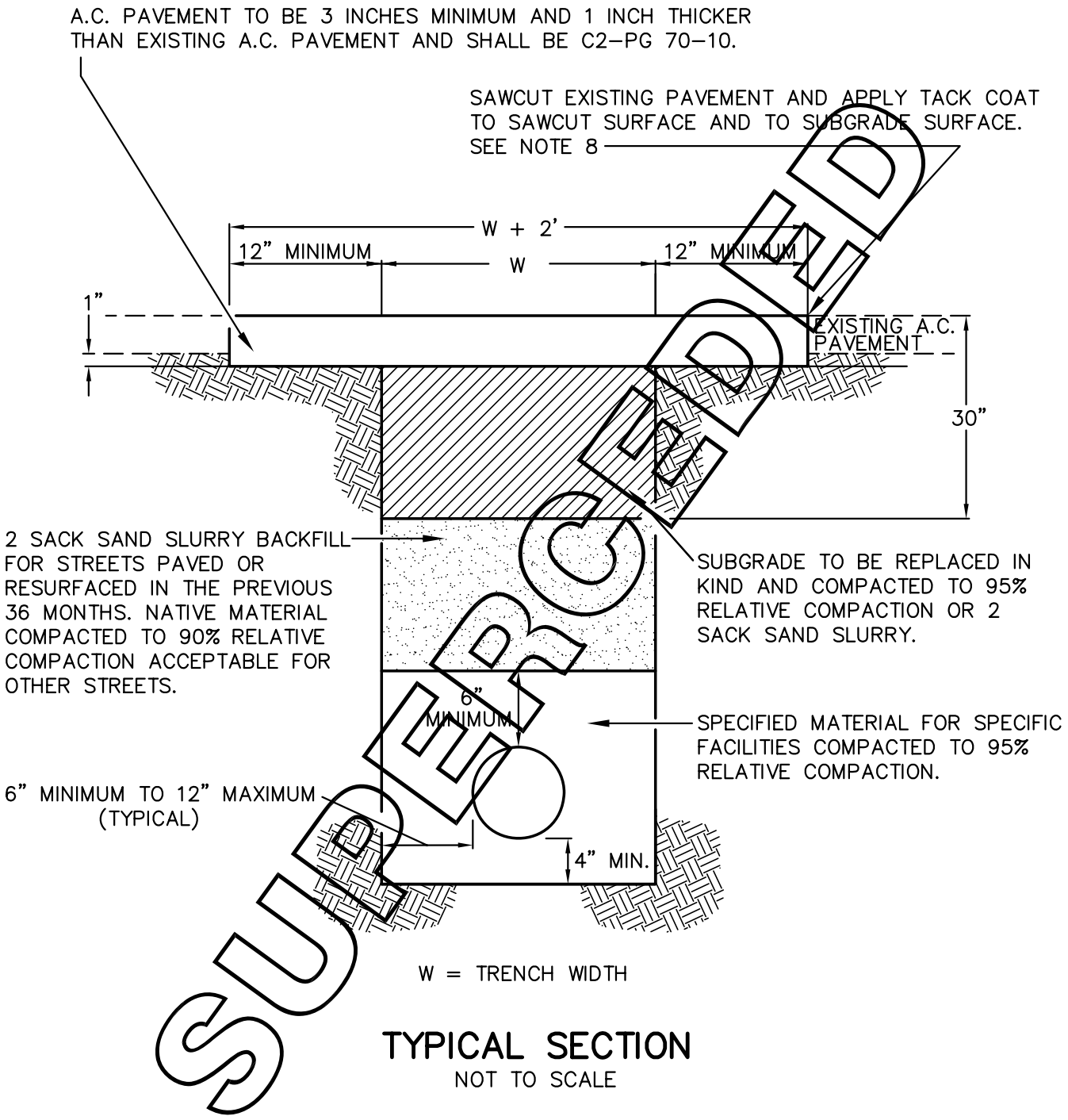

SUPERSEDED

TYPICAL SECTION

NOT TO SCALE

CITY OF VICTORVILLE - ENGINEERING DEPARTMENT				
REV.	DATE	BY	**TRENCH BACKFILL AND PAVEMENT REPAIRS**	**S-10**
	9/11/89	Dablo		
1	6/1/07	STAFF	JOHN A. McGLADE, CITY ENGINEER	SHEET 1 OF 2

NOTES:

1. ALL EXCAVATIONS WITHIN THE CITY RIGHT-OF-WAY REQUIRE AN EXCAVATION PERMIT FROM THE ENGINEERING DEPARTMENT.
2. NOTIFY UNDERGROUND SERVICE ALERT (DigAlert) 2 WORKING DAYS PRIOR TO START OF EXCAVATION AT 1-800-227-2600.
3. NOTIFY ENGINEERING DEPARTMENT 1 WORKING DAY (24 HOURS) PRIOR TO START OF CONSTRUCTION TO ARRANGE INSPECTIONS BY CITY PUBLIC WORKS INSPECTORS.
4. ALL EXCAVATIONS SHALL BE MADE, PROTECTED AND SUPPORTED AS REQUIRED FOR SAFETY AS PRESCRIBED BY CAL OSHA.
5. TEMPORARY PAVING SHALL BE 2 SACK SAND SLURRY OR 2 INCH THICKNESS TEMPORARY ASPHALT OVER COMPACTED SUBGRADE TO TOP OF PAVEMENT TO PROVIDE A SAFE AND SMOOTH TRAVELED SURFACE. PERMANENT PAVING SHALL BE PLACED WITHIN 7 DAYS OF EXCAVATION. SEAL COAT PAVEMENT 6 INCHES BEYOND PAVEMENT REPAIR AREA.
6. ANY STREET PAVED OR RESURFACED IN THE PREVIOUS 36 MONTHS THAT IS TRENCHED FOR 300 FEET OR MORE IN A TRAVELED LANE OR EXTENDS MORE THAN 7 FEET FROM THE CURB FACE / EDGE OF PAVEMENT OR HAS MORE THAN 3 CROSS TRENCHES IN 300 FEET SHALL BE OVERLAID AS DIRECTED BY THE ENGINEER WITH A SELF PROPELLED PAVING MACHINE PER CALTRANS SECTION 39.
7. POT HOLES AND/OR NARROW TRENCH CUTS SHALL NOT BE ALLOWED IN P.C.C. IMPROVEMENTS. P.C.C. SHALL BE SAWCUT, REMOVED AND RECONSTRUCTED IN PANELS AT THE SCORE LINES, OR WEAKENED PLANE JOINTS, OR AT LEAST 10 FEET WIDE AND AS DIRECTED BY THE ENGINEER IN THE FIELD.
8. IF THE EDGE OF THE TRENCH REPAIR (W+2 FEET) IS 2 FEET OR LESS FROM THE LIP OF THE GUTTER OR 3' OR LESS FROM THE EDGE OF PAVEMENT, THE EXISTING PAVEMENT SHALL BE REMOVED AND REPLACED PER THE TYPICAL SECTION.
9. FOR NOMINAL PIPE DIAMETERS OF 12" OR LESS, TYPICAL COVER IS 36" UNLESS CIRCUMSTANCES WARRANT DIFFERENTLY OR OTHERWISE APPROVED BY THE CITY ENGINEER.

SUPERSEDED

CITY OF VICTORVILLE - ENGINEERING DEPARTMENT				
REV.	DATE	BY	**TRENCH BACKFILL AND PAVEMENT REPAIRS**	**S-10**
	9/11/89	Dablo		
1	7/25/07	STAFF	JOHN A. McGLADE, CITY ENGINEER	SHEET 2 OF 2

BLANK INTENTIONALLY

CITY OF VICTORVILLE - ENGINEERING DEPARTMENT				
REV.	DATE	BY	RESIDENTIAL AND COMMERCIAL CURB RAMP	S-11
	4/22/92	R.A.		
1	6/1/07	STAFF	JOHN A. McGLADE, CITY ENGINEER	SHEET 1 OF 1

SUPERCEDED

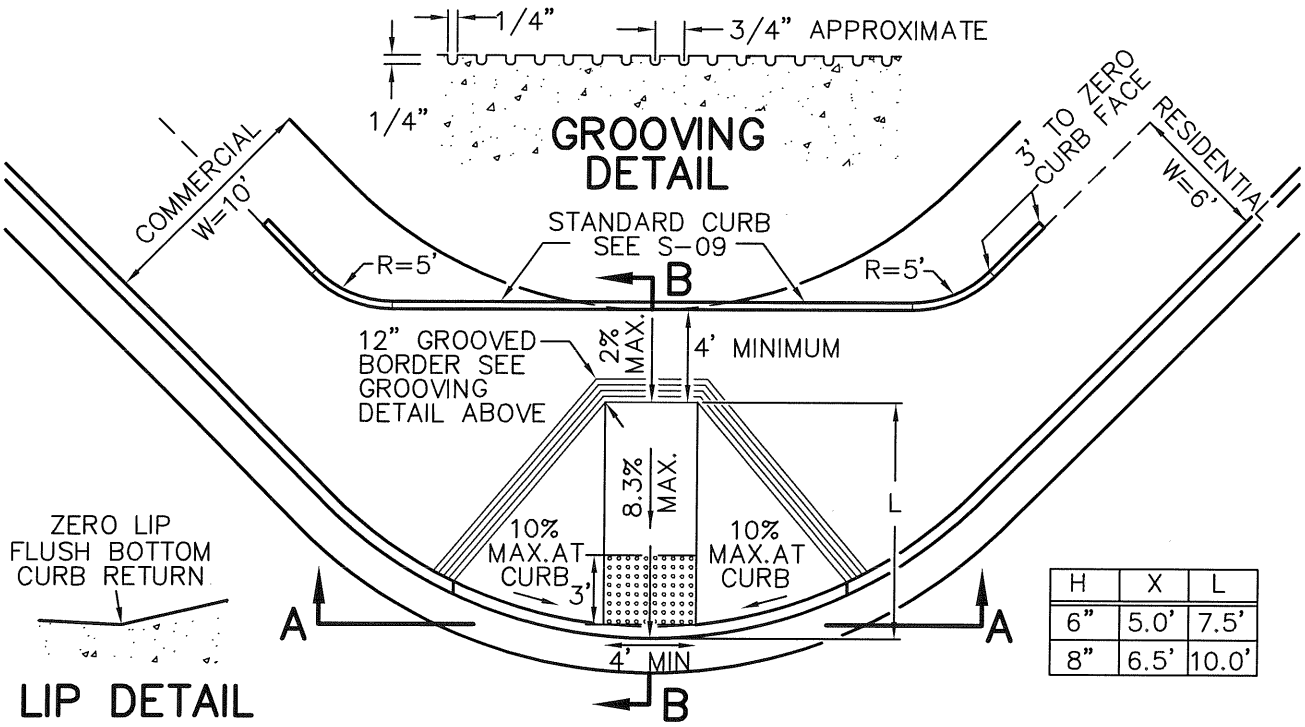

H	X	L
6"	5.0'	7.5'
8"	6.5'	10.0'

LIP DETAIL

CURB RAMP
NOT TO SCALE

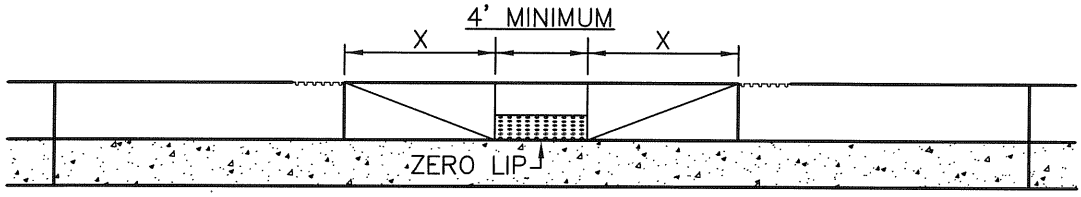

SECTION A–A
NOT TO SCALE

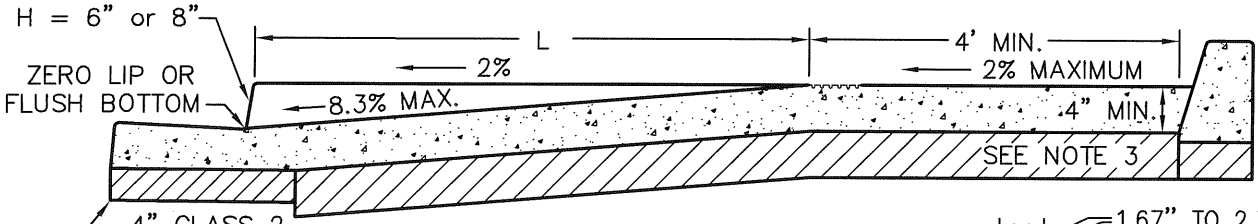

SECTION B–B
NOT TO SCALE

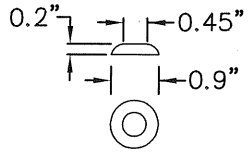

RAISED TRUNCATED DOME
(N.T.S.)

THE STANDARD COLOR FOR TRUNCATED DOMES IS BLUE

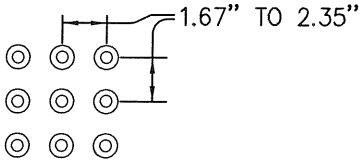

RAISED TRUNCATED DOME PATTERN (IN-LINE)

DETECTABLE WARNING SURFACE
(N.T.S.)

APPROVED BY CITY ENGINEER		CITY OF VICTORVILLE - ENGINEERING DEPARTMENT	
DATE	INITIALS	CURB RAMP	S-11A
02/26/09	J McG.	JOHN A. MCGLADE, CITY ENGINEER	SHEET 1 OF 2

NOTES:

1. CURB RAMP SHALL BE CONSTRUCTED FROM PORTLAND CEMENT CONCRETE CONTAINING NOT LESS THAN 550 POUNDS OF TYPE II PORTLAND CEMENT PER CUBIC YARD WITH 4% AIR ENTRAINMENT AND 1" MAXIMUM AGGREGATE GRADING.
2. CONCRETE SHALL BE CURED WITH WHITE PIGMENTED CURING COMPOUND.
3. BASE SHALL CONSIST OF 6" NATIVE MATERIAL (MINIMUM "R" VALUE = 70) COMPACTED TO 90% RELATIVE COMPACTION. IF NATIVE MATERIAL IS CLAY OR CALICHE OR HAS AN "R" VALUE OF LESS THAN 70, CONSTRUCT 4" CLASS 2 AGGREGATE BASE COMPACTED TO 90% RELATIVE COMPACTION OR AS DIRECTED BY THE CITY ENGINEER.
4. BASE MATERIAL SHALL BE COMPACTED TO 90% RELATIVE COMPACTION FOR THE SIDEWALK AND 95% RELATIVE COMPACTION FOR THE CURB AND GUTTER.
5. IF A CURB RAMP IS TO BE INSTALLED IN AN EXISTING SIDEWALK, CURB AND GUTTER, THE EXISTING SIDEWALK, CURB AND GUTTER SHALL BE SAWCUT AND REMOVED TO THE NEAREST SCORELINE, WEAKENED PLANE JOINT OR EXPANSION JOINT. ALSO, ADJACENT PAVING SHALL BE SAWCUT 2' FROM THE EDGE OF THE GUTTER AND REPAVED ACCORDING TO STANDARD S-10.
6. CONSTRUCT RAMP IN THE MIDDLE OF THE CURB RETURN OR AT THE END OF THE CURB RETURN AWAY FROM THE CROSS GUTTER. RAMP MAY BE MOVED INTO THE TANGENT CURB SECTION AT INTERSECTIONS TO AVOID DISRUPTION OF HEAVY DRAINAGE FLOW.
7. IN LOCATING RAMPS IN CURB RETURN, CONSIDERATION SHOULD BE GIVEN TO THE LOCATION OF EXISTING PAINTED PEDESTRIAN CROSS WALKS AND TRAFFIC SIGNALS.
8. THE EDGE OF THE DETECTABLE WARNING SURFACE NEAREST THE STREET SHALL BE BETWEEN 6 INCHES AND 8 INCHES FROM THE GUTTER FLOWLINE.
9. IN CASES WHERE THIS STANDARD DOES NOT FIT THE SITE REQUIREMENT, THE DESIGNER MAY USE CALIFORNIA DEPARTMENT OF TRANSPORTATION STANDARD PLAN A88A (LATEST VERSION) AS APPROVED BY THE CITY ENGINEER.
10. IN CASES WHERE SURVEY MONUMENTATION MAY BE DISTURBED, SWING TIES AND NAIL AND TAG (R.P.'s) SHALL BE IDENTIFIED AND REPLACED.

APPROVED BY CITY ENGINEER		CITY OF VICTORVILLE - ENGINEERING DEPARTMENT	
DATE	INITIALS	CURB RAMP	S-11A
02/26/09	J. McG.	JOHN A. MCGLADE, CITY ENGINEER	SHEET 2 OF 2

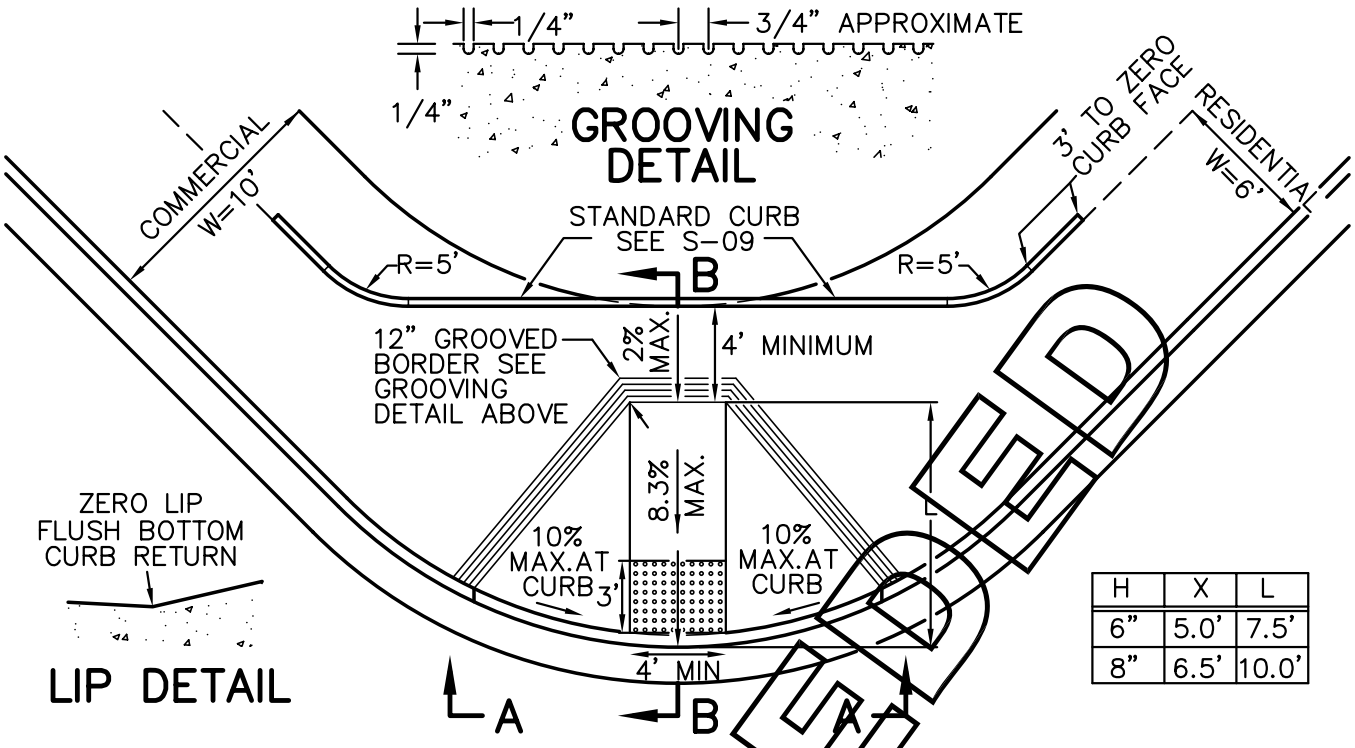

H	X	L
6"	5.0'	7.5'
8"	6.5'	10.0'

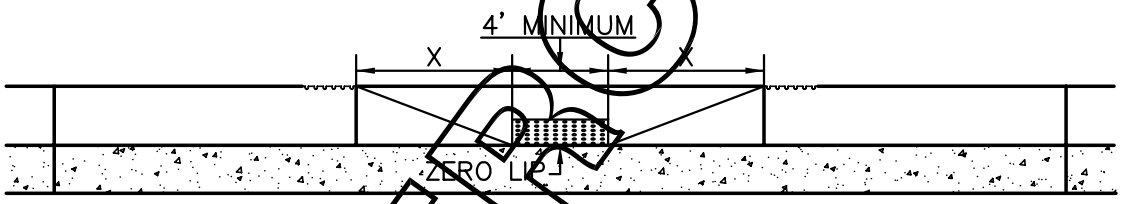

SECTION A–A
NOT TO SCALE

SECTION B–B
NOT TO SCALE

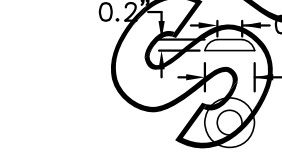

RAISED TRUNCATED DOME
(N.T.S.)

THE STANDARD COLOR FOR TRUNCATED DOMES IS BLUE

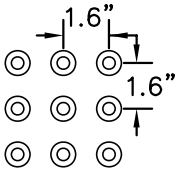

RAISED TRUNCATED DOME PATTERN (IN-LINE)

DETECTABLE WARNING SURFACE
(N.T.S.)

SUPERSEDED

CITY OF VICTORVILLE - ENGINEERING DEPARTMENT				
REV.	DATE	BY	CURB RAMP	S-11A
1	7/20/05	B.W.G.		
2	7/25/07	J.A.M.	JOHN A. McGLADE, CITY ENGINEER	SHEET 1 OF 2

NOTES:

1. CURB RAMP SHALL BE CONSTRUCTED FROM PORTLAND CEMENT CONCRETE CONTAINING NOT LESS THAN 550 POUNDS OF TYPE II PORTLAND CEMENT PER CUBIC YARD WITH 4% AIR ENTRAINMENT AND 1" MAXIMUM AGGREGATE GRADING.
2. CONCRETE SHALL BE CURED WITH WHITE PIGMENTED CURING COMPOUND.
3. BASE SHALL CONSIST OF 6" NATIVE MATERIAL (MINIMUM "R" VALUE = 70) COMPACTED TO 90% RELATIVE COMPACTION. IF NATIVE MATERIAL IS CLAY OR CALICHE OR HAS AN "R" VALUE OF LESS THAN 70, CONSTRUCT 4" CLASS 2 AGGREGATE BASE COMPACTED TO 90% RELATIVE COMPACTION OR AS DIRECTED BY THE CITY ENGINEER.
4. BASE MATERIAL SHALL BE COMPACTED TO 90% RELATIVE COMPACTION FOR THE SIDEWALK AND 95% RELATIVE COMPACTION FOR THE CURB AND GUTTER.
5. IF A CURB RAMP IS TO BE INSTALLED IN AN EXISTING SIDEWALK, CURB AND GUTTER, THE EXISTING SIDEWALK, CURB AND GUTTER SHALL BE SAWCUT AND REMOVED TO THE NEAREST SCORELINE, WEAKENED PLANE JOINT OR EXPANSION JOINT. ALSO, ADJACENT PAVING SHALL BE SAWCUT 2' FROM THE EDGE OF THE GUTTER AND REPAVED ACCORDING TO STANDARD S-10.
6. CONSTRUCT RAMP IN THE MIDDLE OF THE CURB RETURN OR AT THE END OF THE CURB RETURN AWAY FROM THE CROSS GUTTER. RAMP MAY BE MOVED INTO THE TANGENT CURB SECTION AT INTERSECTIONS TO AVOID DISRUPTION OF HEAVY DRAINAGE FLOW.
7. IN LOCATING RAMPS IN CURB RETURN, CONSIDERATION SHOULD BE GIVEN TO THE LOCATION OF EXISTING PAINTED PEDESTRIAN CROSS WALKS AND TRAFFIC SIGNALS.
8. THE EDGE OF THE DETECTABLE WARNING SURFACE NEAREST THE STREET SHALL BE BETWEEN 6 INCHES AND 8 INCHES FROM THE GUTTER FLOWLINE.
9. IN CASES WHERE THIS STANDARD DOES NOT FIT THE SITE REQUIREMENT, THE DESIGNER MAY USE CALIFORNIA DEPARTMENT OF TRANSPORTATION STANDARD PLAN A88A (LATEST VERSION) AS APPROVED BY THE CITY ENGINEER.
10. IN CASES WHERE SURVEY MONUMENTATION MAY BE DISTURBED, SWING TIES AND NAIL AND TAG (R.P.'s) SHALL BE IDENTIFIED AND REPLACED.

SUPERSEDED

CITY OF VICTORVILLE - ENGINEERING DEPARTMENT				
REV.	DATE	BY	CURB RAMP	S-11A
	7/20/05	B.W.G.		
	7/25/07	J.A.M.	JOHN A. McGLADE, CITY ENGINEER	SHEET 2 OF 2

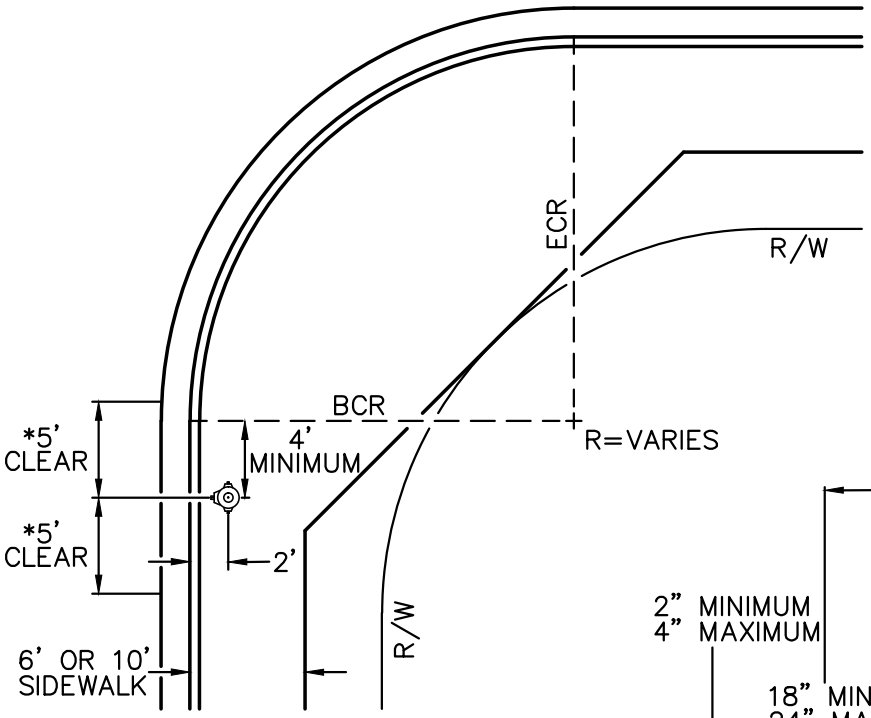

LOCATION

STREET INTERSECTION OR
COMMERCIAL DRIVE APPROACH
TYPE 3

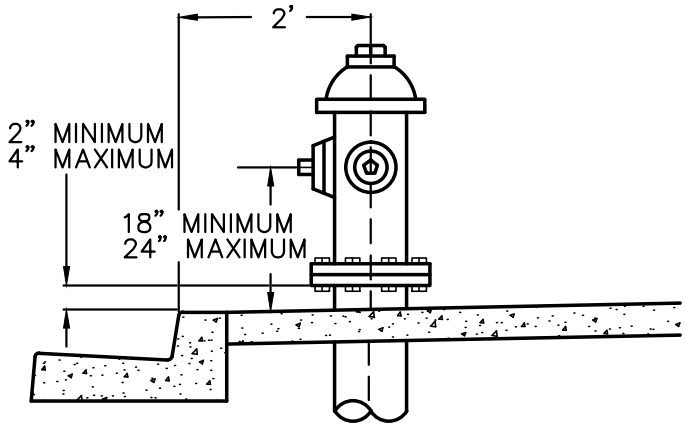

ELEVATION

NOT TO SCALE

NOTES:

1. FIRE HYDRANTS ARE TO HAVE 6 INCH BARRELS WITH 2 EACH 2 ½ INCH AND 1 EACH 4 INCH OUTLETS WITH NATIONAL STANDARD THREADS. HYDRANTS SHALL BE OF THE DRY BARREL, SELF DRAINING TYPE AND PAINTED SAFETY YELLOW AND BE APPROVED BY THE FIRE CHIEF.
2. FIRE HYDRANTS SHALL BE LOCATED AT STREET INTERSECTIONS AS SHOWN AT EITHER THE ECR OR BCR AND ELSEWHERE AS REQUIRED AT PROPERTY LINES. HYDRANTS SHALL BE PLACED PER SAN BERNARDINO COUNTY FIRE DEPARTMENT SPACING REQUIREMENTS.
3. * A CLEAR WORKING AREA OF 5 FEET EITHER SIDE OF THE HYDRANT SHALL BE MAINTAINED. NO STRUCTURE; INCLUDING STREET LIGHTS, POWER POLES, UTILITY CABINETS OR MAILBOXES, SHALL BE ERECTED IN THIS AREA THAT PROJECT ABOVE THE TOP OF SIDEWALK.
4. PAINT TOP AND FACE OF CURB 15 FEET EITHER SIDE OF A FIRE HYDRANT RED (IE. NO PARKING). THE CURB IN A CURB RETURN OR DRIVEWAY APPROACH NEED NOT BE PAINTED.
5. RETROFITTED FIRE HYDRANTS SHALL HAVE THE SIDEWALK AND CURB & GUTTER SAWCUT, REMOVED AND REPLACED AT THE NEAREST SCORE LINE PER CITY STANDARDS AND AS DIRECTED BY THE ENGINEER IN THE FIELD.
6. FIRE HYDRANTS SHALL NOT BE LOCATED WITHIN 2 FEET OF A WING OF A DRIVEWAY.

CITY OF VICTORVILLE - ENGINEERING DEPARTMENT				
REV.	DATE	BY	FIRE HYDRANT LOCATION	S-12
2	5/16/16	STAFF		
1	6/1/07	STAFF	BRIAN W. GENGLER, CITY ENGINEER	SHEET 1 OF 1

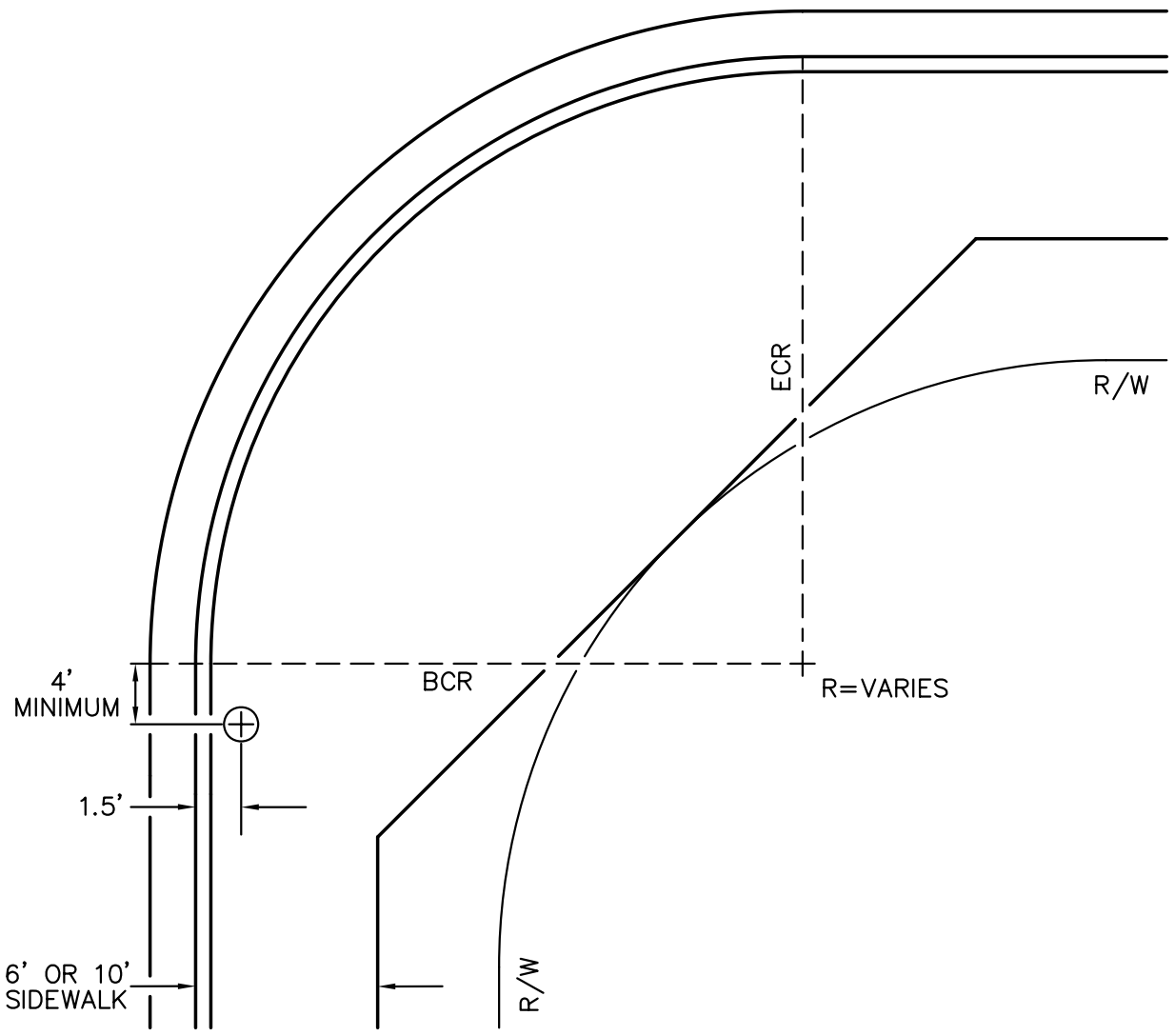

LOCATION

NOT TO SCALE

NOTES:

1. CORNER UTILITY LOCATION MAY BE BY EITHER THE BCR OR ECR AS SHOWN FOR POWER POLES AND STREET LIGHTS. NO UTILITY, EXCEPT SIGNALS SHALL BE LOCATED ON THE SIDEWALK IN THE CURB RETURN.
2. UTILITIES SHALL MAINTAIN 5 FEET CLEAR OF EXISTING AND PROPOSED FIRE HYDRANTS PER CITY STANDARD S–12.
3. RETROFITTED UTILITY SHALL HAVE THE SIDEWALK AND CURB & GUTTER SAWCUT, REMOVED AND REPLACED TO THE NEAREST SCORE LINE.

CITY OF VICTORVILLE - ENGINEERING DEPARTMENT				
REV.	DATE	BY	**CORNER UTILITY LOCATION**	**S-13**
	7/16/92	Dablo		
1	6/1/07	STAFF	JOHN A. McGLADE, CITY ENGINEER	SHEET 1 OF 1

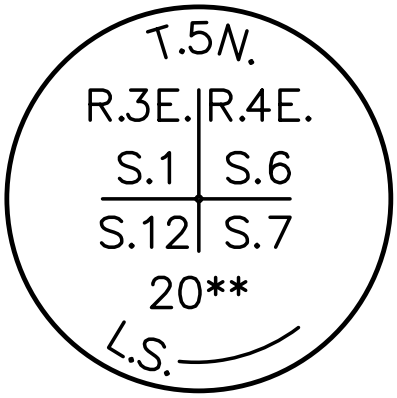

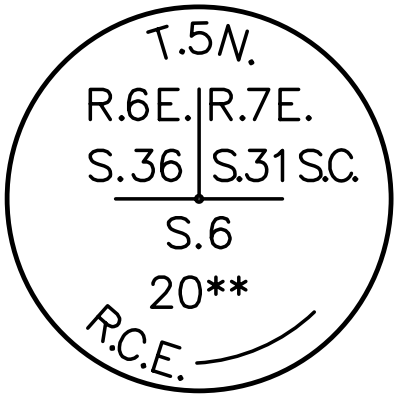

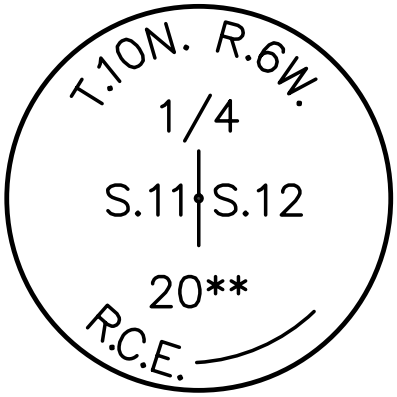

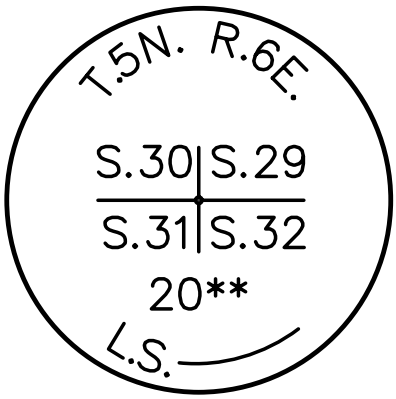

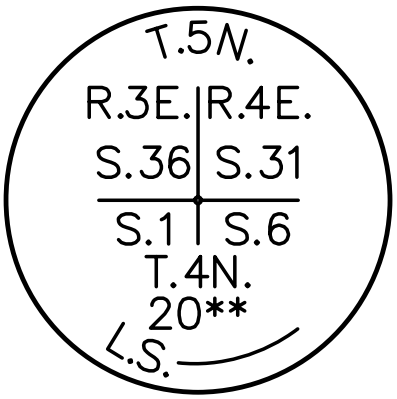

EXAMPLES OF BRASS CAP MONUMENTATION AT SECTIONAL CORNERS

NOTES:

1. FOR REPLACEMENT OF P.L.S.S. CORNERS SUCH AS SECTION CORNERS OR QUARTER CORNERS, USE A 2" IRON PIPE WITH A BRASS CAP STAMPED AS SHOWN ABOVE. ALL OTHER SURVEY MONUMENTS TO BE PER VICTORVILLE MUNICIPLE CODE TITLE 17.

2. ** – DENOTES YEAR NUMBER OF MONUMENTATION.

CITY OF VICTORVILLE - ENGINEERING DEPARTMENT				
REV.	DATE	BY	**P.L.S.S. SURVEY MONUMENTATION REPLACEMENT**	**S-14**
	1/5/76	SFH		
1	6/1/07	STAFF	JOHN A. McGLADE, CITY ENGINEER	SHEET 1 OF 1

BLANK INTENTIONALLY

CITY OF VICTORVILLE - ENGINEERING DEPARTMENT				
REV.	DATE	BY	ACCESS RIGHTS	S-15
	1/5/76	S.F.H.		
1	6/1/07	STAFF	JOHN A. McGLADE, CITY ENGINEER	SHEET 1 OF 1

OBSOLETE

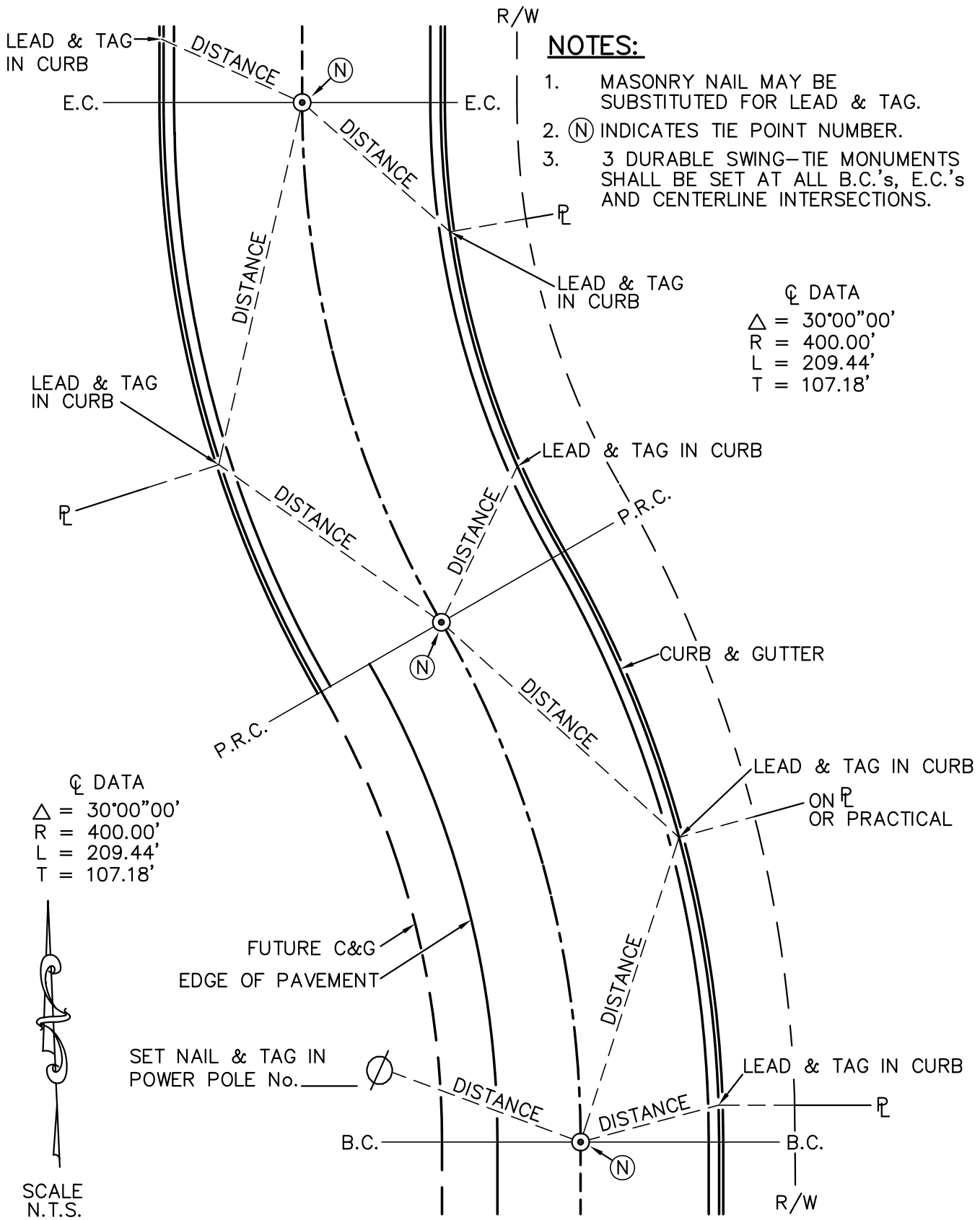

CITY OF VICTORVILLE - ENGINEERING DEPARTMENT				
REV.	DATE	BY	**CENTERLINE SURVEY TIES STANDARD 1**	**S-16**
	1/5/76	S.F.H.		
1	6/1/07	STAFF	JOHN A. McGLADE, CITY ENGINEER	SHEET 1 OF 1

NOTES:

1. MASONRY NAIL MAY BE SUBSTITUTED FOR LEAD & TAG.
2. (N) INDICATES TIE POINT NUMBER.
3. 3 DURABLE SWING–TIE MONUMENTS SHALL BE SET AT ALL B.C.'s, E.C.'s AND CENTERLINE INTERSECTIONS.
4. ○ INDICATES 1" I.P. SET AT LOT CORNER AND USED AS A TIE POINT FOR STREET ℄.

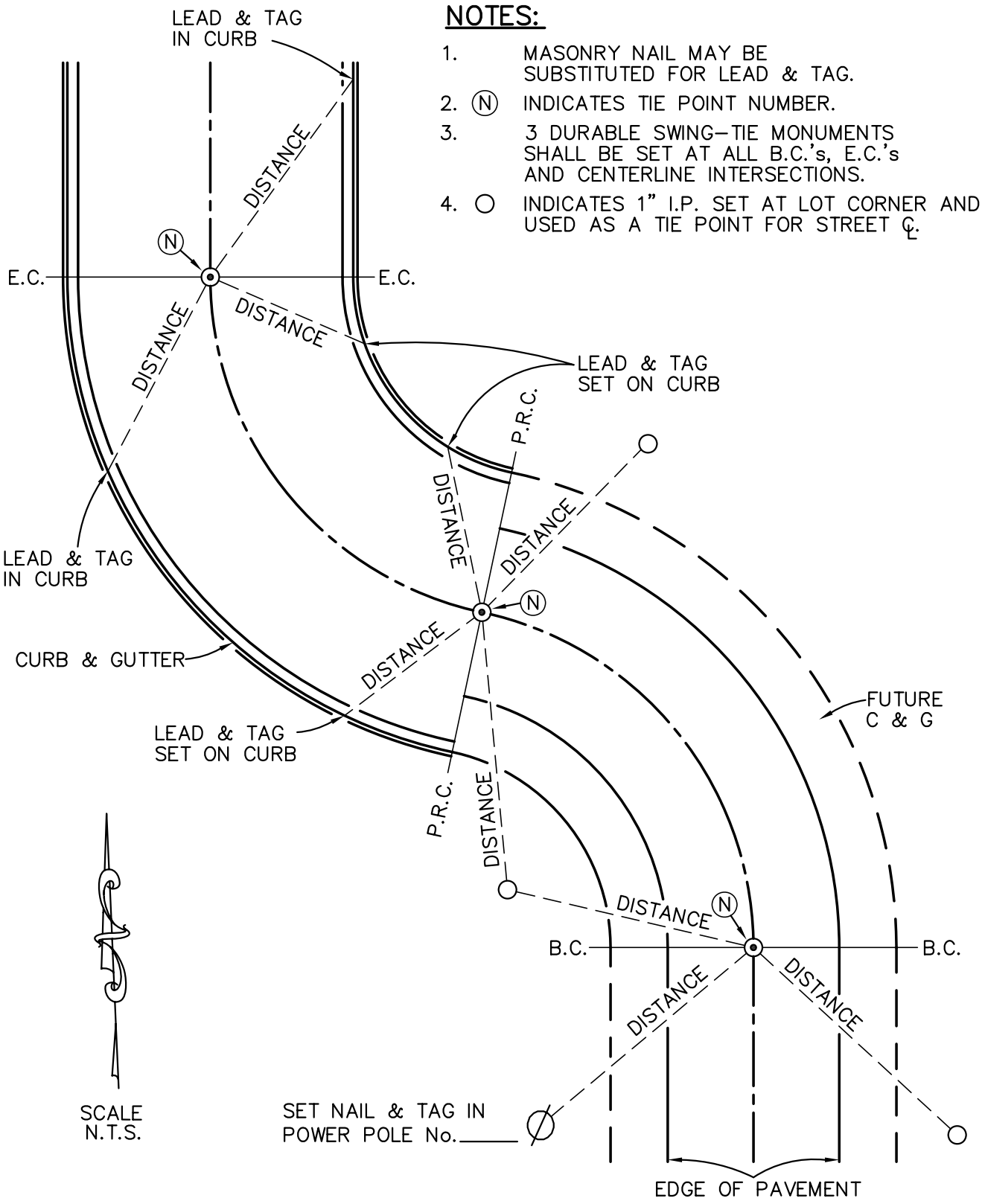

CITY OF VICTORVILLE - ENGINEERING DEPARTMENT				
REV.	DATE	BY	**CENTERLINE SURVEY TIES STANDARD 2**	**S-17**
	1/5/76	S.F.H.		
1	6/1/07	STAFF	JOHN A. McGLADE, CITY ENGINEER	SHEET 1 OF 1

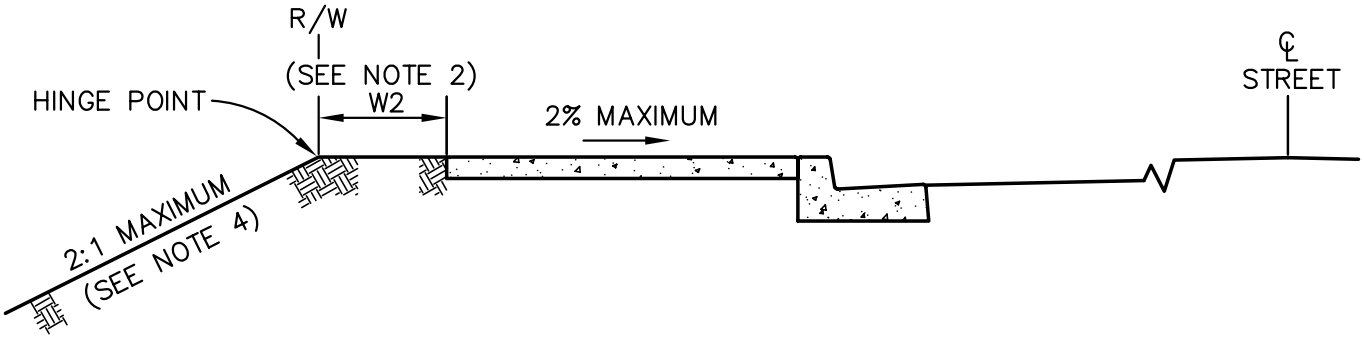

EXISTING OR FUTURE SIDEWALK

NOT TO SCALE

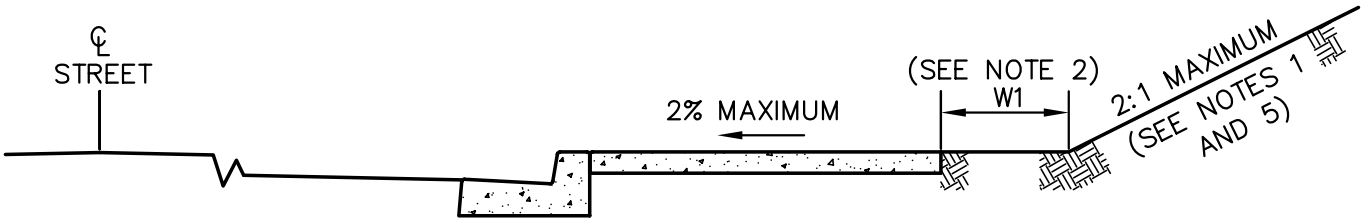

EXISTING OR FUTURE SIDEWALK

NOT TO SCALE

NOTES:

1. STEEPER SLOPES IN CUT SECTIONS MAY BE PERMITTED UP TO AN ABSOLUTE MAXIMUM OF $1\frac{1}{2}$:1 PROVIDED REMEDIAL MEASURES AND/OR SOIL TESTS TOGETHER WITH THE RECOMMENDATIONS OF A QUALIFIED SOILS ENGINEER ARE PROVIDED SUBSTANTIATING THE PROPOSED SLOPE DESIGN.
2. W1 = 4 FEET MINIMUM FOR RESIDENTIAL ZONES.
   W1 = 0 (ZERO) FEET FOR COMMERCIAL ZONES. REQUIRES PLACEMENT OF STANDARD CURB S–09.
   W2 = DEPENDENT ON RIGHT OF WAY WIDTH IN RESIDENTIAL ZONES, 4 FEET MINIMUM (HINGE POINT SHALL BE AT RIGHT OF WAY LINE.)
   W2 = 0 (ZERO) FEET FOR COMMERCIAL ZONES.
3. DEVIATION FROM THIS STANDARD MAY BE PERMITTED BASED ON ENGINEERED DESIGN TO ADEQUATELY PROVIDE FOR SUPPORT OF THE SIDEWALK AREA.
4. FOR COMMERCIAL ZONES, SLOPE EASEMENTS MAY BE REQUIRED AS DIRECTED BY THE CITY ENGINEER.
5. MAXIMUM OF 3:1 SLOPE IF INSIDE LANDSCAPE MAINTENANCE ASSESSMENT DISTRICT.

CITY OF VICTORVILLE - ENGINEERING DEPARTMENT				
REV.	DATE	BY	**SLOPE AND PARKWAY GRADING REQUIREMENTS**	**S-18**
	1/6/76	S.F.H.		
1	6/1/07	STAFF	JOHN A. McGLADE, CITY ENGINEER	SHEET 1 OF 1

BLANK INTENTIONALLY

CITY OF VICTORVILLE - ENGINEERING DEPARTMENT				
REV.	DATE	BY	TYPICAL SECTION ASPHALTIC CONCRETE PAVEMENTS	S-19
	2/5/76	X.S.S.		
1	6/1/07	STAFF	JOHN A. McGLADE, CITY ENGINEER	SHEET 1 OF 1

OBSOLETE

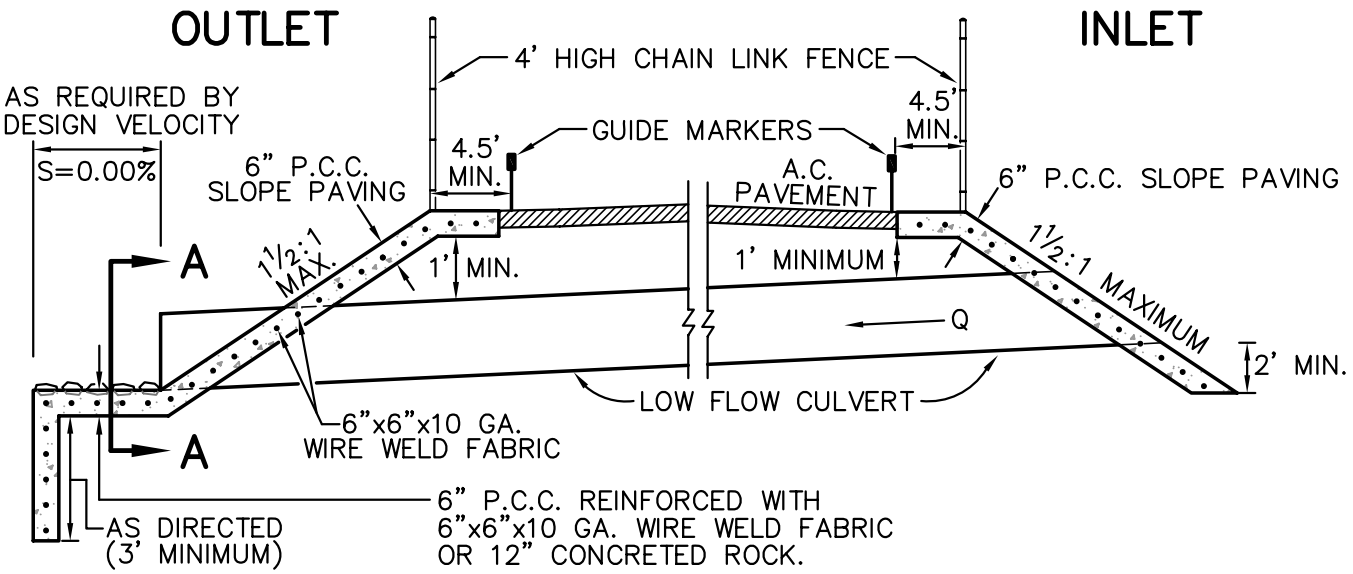

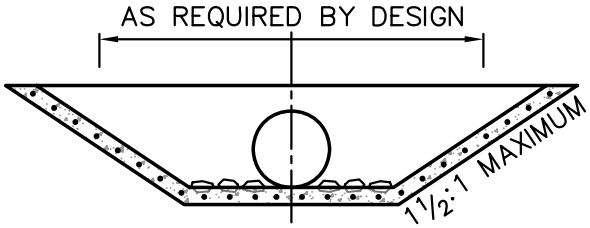

SECTION A–A

NOTES:

1. ALL CONCRETE SHALL CONTAIN NOT LESS THAN 550 POUNDS OF CEMENTITIOUS MATERIAL PER CUBIC YARD WITH 4% AIR ENTRAINMENT.
2. DOWNSTREAM CUTOFF WALL SHALL EXTEND DOWN 3' MINIMUM BELOW WASH BOTTOM OR AS REQUIRED BY DESIGN. UPSTREAM WALL SHALL EXTEND DOWN 2' MINIMUM BELOW WASH BOTTOM OR AS REQUIRED BY DESIGN.
3. THIS STANDARD IS TO APPLY TO THE INITIAL STAGE OF STAGED CONSTRUCTION OF AN ARTERIAL STREET TO BE DEVELOPED WITH TWO LANES AND PAVED SHOULDERS ACROSS THE WASH AREA SUBJECT TO FLOW. UPSTREAM AND DOWNSTREAM CHANNEL BOTTOM AND BANK PROTECTION TREATMENT TYPICAL FOR THIS APPLICATION AND THE APPLICATION DEPICTED ON STANDARD DRAWING NUMBER D–01. ALTERNATE METHODS OF CHANNEL BOTTOM AND BANK PROTECTION MAY BE APPROVED BASED ON DESIGN CONDITIONS, OTHERWISE THIS STANDARD AND STANDARD D–01 SHALL APPLY.

CITY OF VICTORVILLE - ENGINEERING DEPARTMENT				
REV.	DATE	BY	**STANDARD CUTOFF WALL FOR DRAINAGE CHANNEL**	**S-20**
	2/5/76	X.S.S.		
1	6/1/07	STAFF	JOHN A. McGLADE, CITY ENGINEER	SHEET 1 OF 1

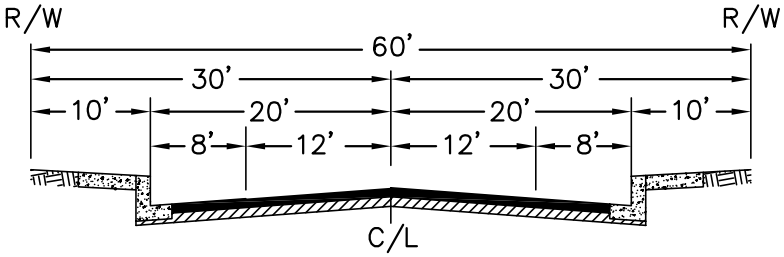

LOCAL

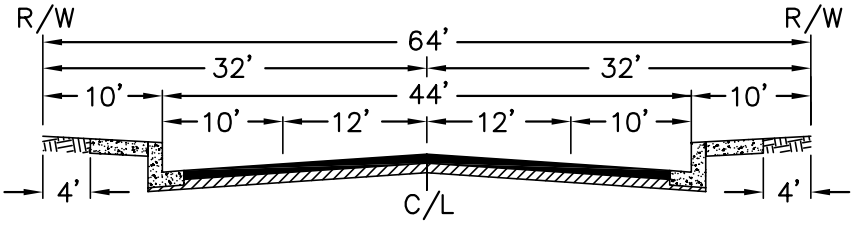

COLLECTOR

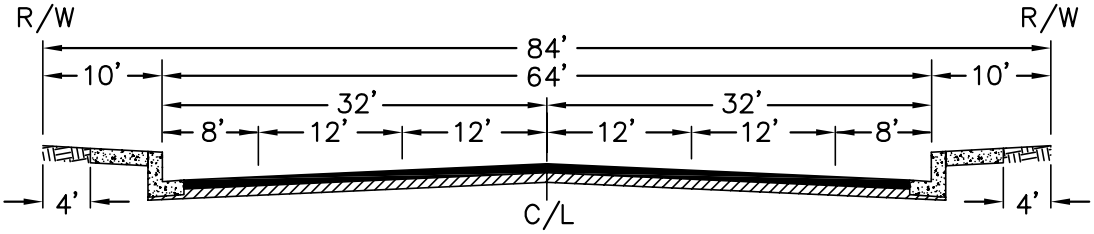

ARTERIAL

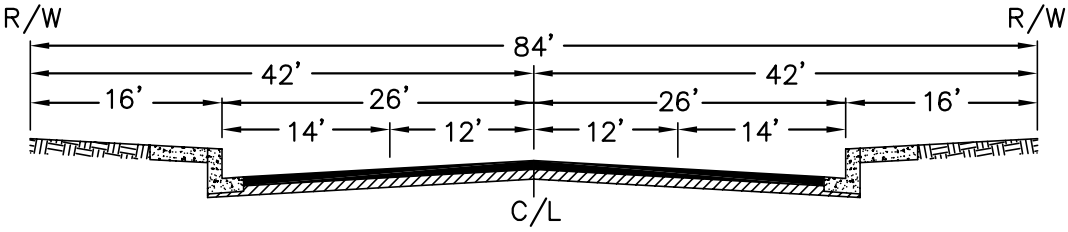

SECONDARY ARTERIAL

OLD TOWN SPECIFIC PLAN

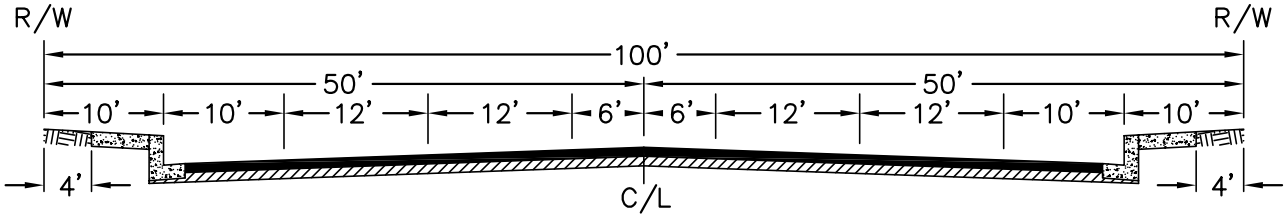

MAJOR ARTERIAL

CITY OF VICTORVILLE - ENGINEERING DEPARTMENT				
REV.	DATE	BY	**STANDARD STREET GEOMETRIC CROSS-SECTIONS**	**S-21**
	9/30/76	X.S.S.		
1	6/1/07	STAFF	JOHN A. McGLADE, CITY ENGINEER	SHEET 1 OF 2

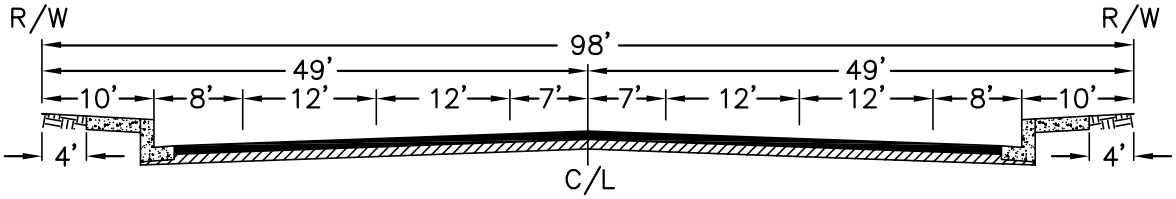

MAJOR ARTERIAL

S.C.L.A. SPECIFIC PLAN

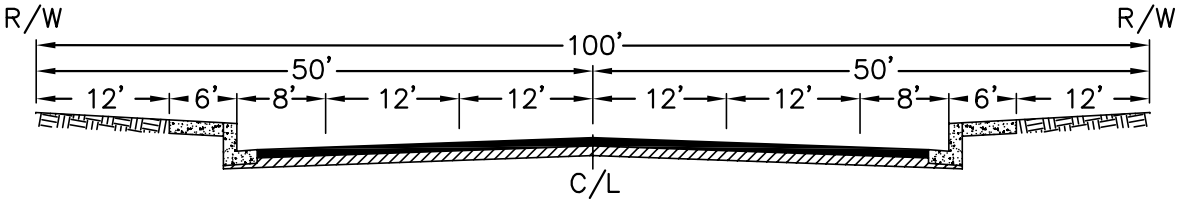

RESIDENTIAL ARTERIAL

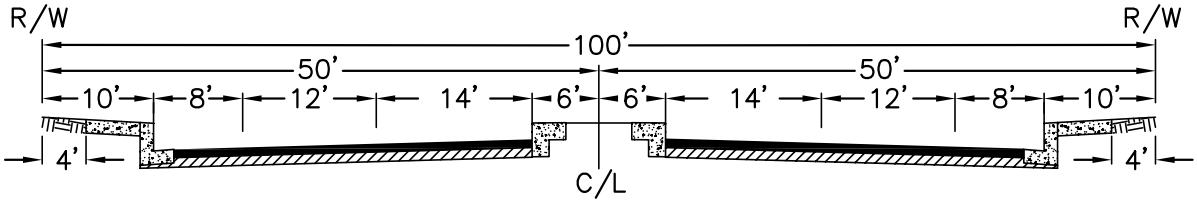

PARKWAY

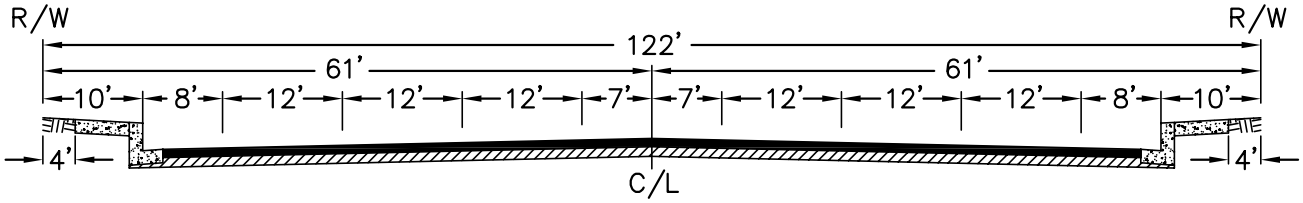

SUPER ARTERIAL

S.C.L.A. SPECIFIC PLAN

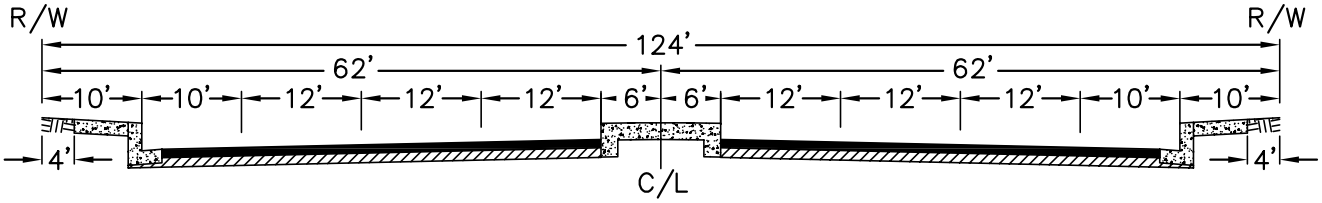

SUPER ARTERIAL

CITY OF VICTORVILLE - ENGINEERING DEPARTMENT				
REV.	DATE	BY	**STANDARD STREET GEOMETRIC CROSS-SECTIONS**	**S-21**
	9/30/76	X.S.S.		
1	6/1/07	STAFF	JOHN A. McGLADE, CITY ENGINEER	SHEET 2 OF 2

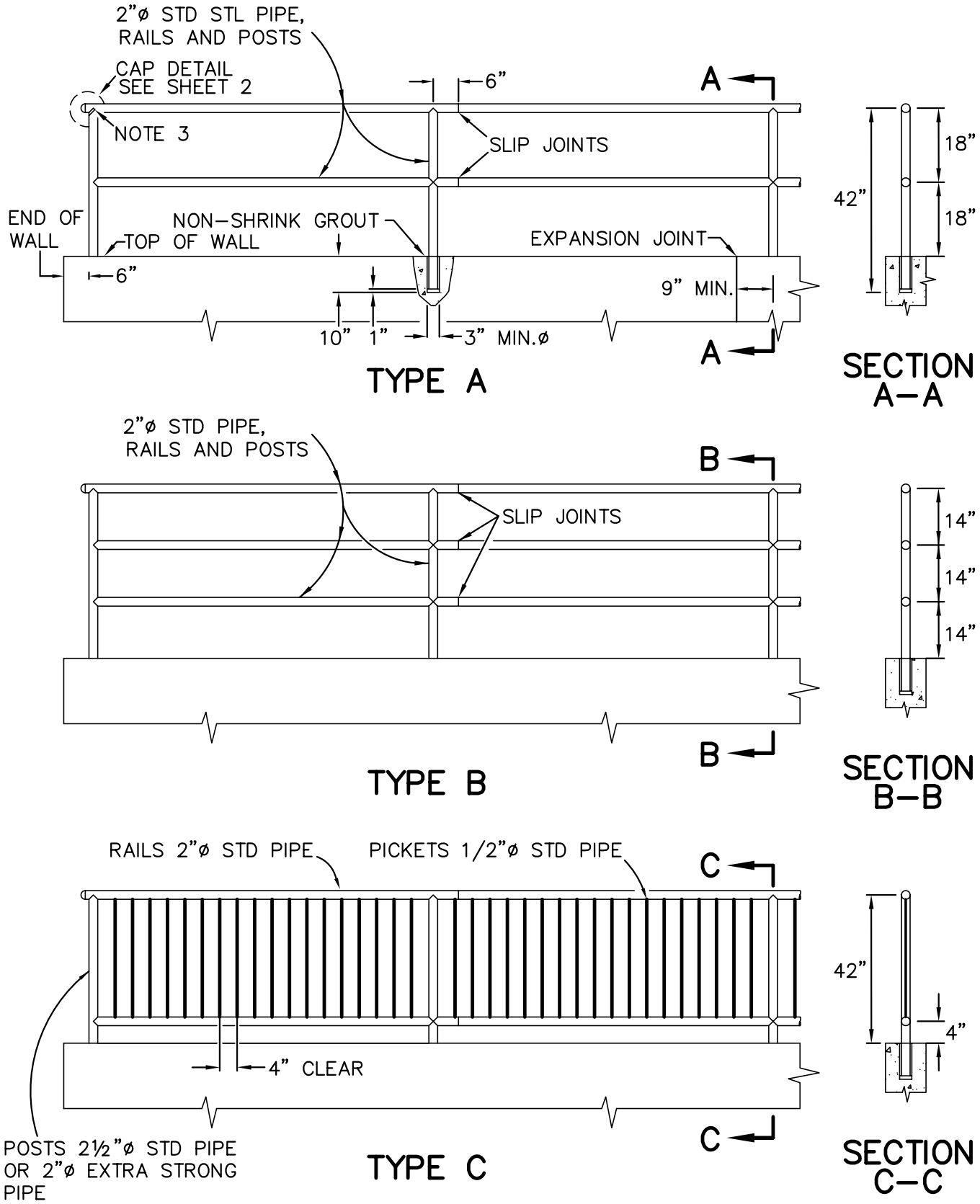

CITY OF VICTORVILLE - ENGINEERING DEPARTMENT				
REV.	DATE	BY	**METAL HAND RAILINGS**	**S-22**
	9/1/75	STAFF		
1	6/1/07	STAFF	JOHN A. MCGLADE, CITY ENGINEER	SHEET 1 OF 2

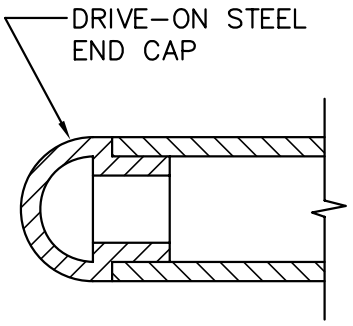

CAP DETAIL FOR RAIL END

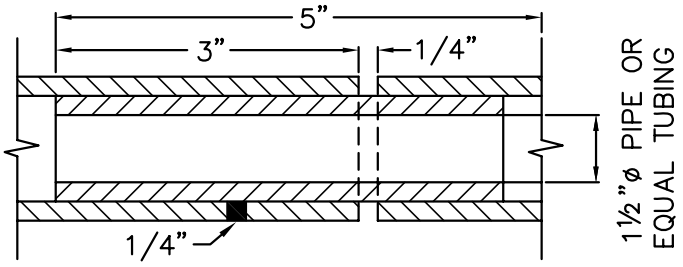

SLIP JOINT DETAIL

NOTES:

1. RAILS, POSTS AND PICKETS SHALL BE GALVANIZED STEEL PIPE.
2. MAXIMUM SPACING OF POSTS SHALL BE 8' ON STRAIGHT ALIGNMENTS AND 6' ON CURVED ALIGNMENTS WITH LESS THAN 30' RADIUS. MAKE SPACING UNIFORM BETWEEN CHANGES IN ALIGNMENT.
3. WELDS SHALL BE SLOT OR FILLET WELDS EQUAL TO THICKNESS OF PIPE. WELD ALL JOINTS ALL AROUND.

CITY OF VICTORVILLE - ENGINEERING DEPARTMENT				
REV.	DATE	BY	METAL HAND RAILINGS	S-22
	9/1/75	STAFF		
1	6/1/07	STAFF	JOHN A. MCGLADE, CITY ENGINEER	SHEET 2 OF 2

BLANK INTENTIONALLY

CITY OF VICTORVILLE - ENGINEERING DEPARTMENT				
REV.	DATE	BY	8' STEEL PIN CROSSARM MOUNTING FOR BALL FIELD LIGHTS	S-23
	4/25/77	X.S.S.		
1	6/1/07	STAFF	JOHN A. McGLADE, CITY ENGINEER	SHEET 1 OF 1

OBSOLETE

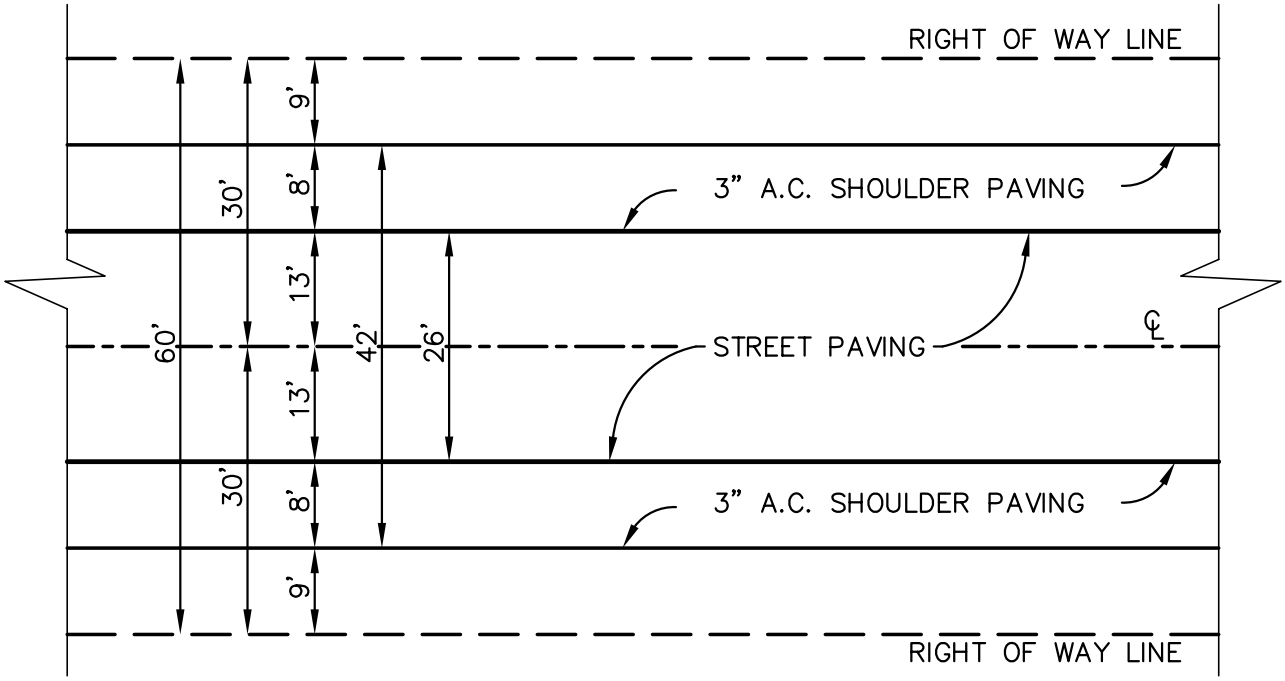

PLAN

NOT TO SCALE

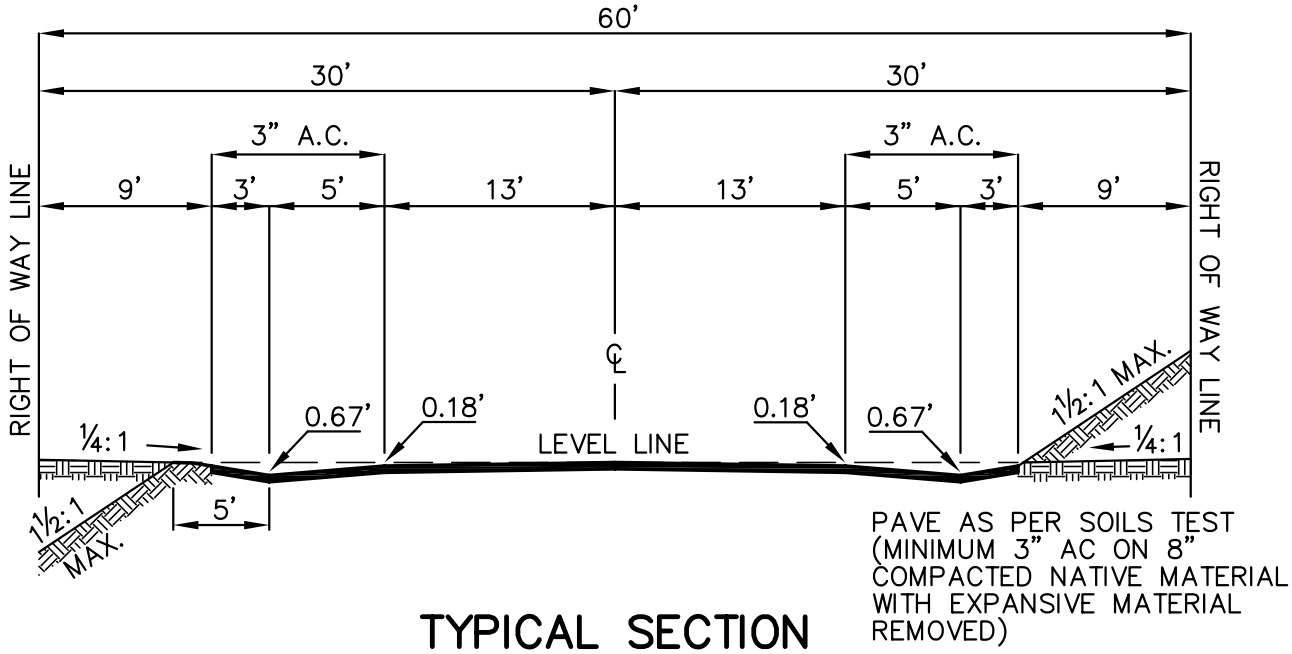

TYPICAL SECTION

NOT TO SCALE

NOTES:

1. ADDITIONAL DRAINAGE IMPROVEMENTS TO BE INSTALLED AS REQUIRED.

CITY OF VICTORVILLE - ENGINEERING DEPARTMENT				
REV.	DATE	BY	**RURAL STREET SECTION**	**S-24**
	3/14/80	M.A.T.	**FOR RESIDENTIAL AREAS WITH LOTS OF 1 ACRE OR MORE**	
1	6/1/07	STAFF	JOHN A. McGLADE, CITY ENGINEER	SHEET 1 OF 1

STREET CLASSIFICATION	RIGHT OF WAY WIDTH (FEET)	DESIGN SPEED (MPH)	CENTERLINE RADIUS (FT. MINIMUM)	GRADE (% MAXIMUM)	TRAFFIC INDEX (MINIMUM)	PAVEMENT SECTION EQUIVALENT (AC/BASE, INCHES MINIMUM)
LOCAL	60	30	300	10%	6	3"/8"
COLLECTOR	64	40	600	7%	8	3.5"/8"
ARTERIAL	84	50		7%	10	5.5"/8"
MAJOR ARTERIAL	100	55			11	6"/10"
SUPER ARTERIAL	124	65			12*	7"/10"

NOTES:

1. REQUIRED RIGHT OF WAY WIDTH MAY BE INCREASED FOR SPECIAL REQUIREMENTS AS DETERMINED BY THE CITY ENGINEER.
2. MINIMUM CENTERLINE RADIUS FOR ALL STREETS SHALL COMPLY WITH THE HIGHWAY DESIGN MANUAL. (MINIMUM 300' RESIDENTIAL STREETS AND MINIMUM 600' COLLECTOR STREETS).
3. CENTERLINE RADIUS MAY HAVE TO BE INCREASED TO MEET MINIMUM SIGHT DISTANCE STANDARDS.
4. * TRAFFIC INDEX FOR BEAR VALLEY ROAD AND AIR EXPRESSWAY IS 13.
5. PAVEMENT SECTION IS BASED ON AN ASSUMED R-VALUE OF 50. PAVEMENT SECTION DESIGN IS DETERMINED BY TI AND R-VALUE PER THE HIGHWAY DESIGN MANUAL.

CURB RETURN RADIUS (FEET)					
STREET CLASSIFICATION	LOCAL	COLLECTOR	ARTERIAL	MAJOR ARTERIAL	SUPER ARTERIAL
LOCAL	20				
COLLECTOR	25	25			
ARTERIAL	30	30	35		
MAJOR ARTERIAL	30	30	35	40	
SUPER ARTERIAL	35	40	50	50	50

NOTES:

1. CALTRANS REQUIRES A 50 FOOT RADIUS FOR STREET CONNECTIONS TO STATE ROUTES.

MINIMUM TANGENT LENGTH AT INTERSECTIONS (FEET)*					
STREET CLASSIFICATION	ON A **LOCAL** CONNECTING TO A	ON A **COLLECTOR** CONNECTING TO A	ON AN **ARTERIAL** CONNECTING TO A	ON A **MAJOR ARTERIAL** CONNECTING TO A	ON A **SUPER ARTERIAL** CONNECTING TO A
LOCAL	60				
COLLECTOR	65	100			
ARTERIAL	75	120	160		
MAJOR ARTERIAL	85	140	200	260	
SUPER ARTERIAL	100	160	240	320	400

*LENGTH IS FROM CENTERLINE OF INTERSECTION

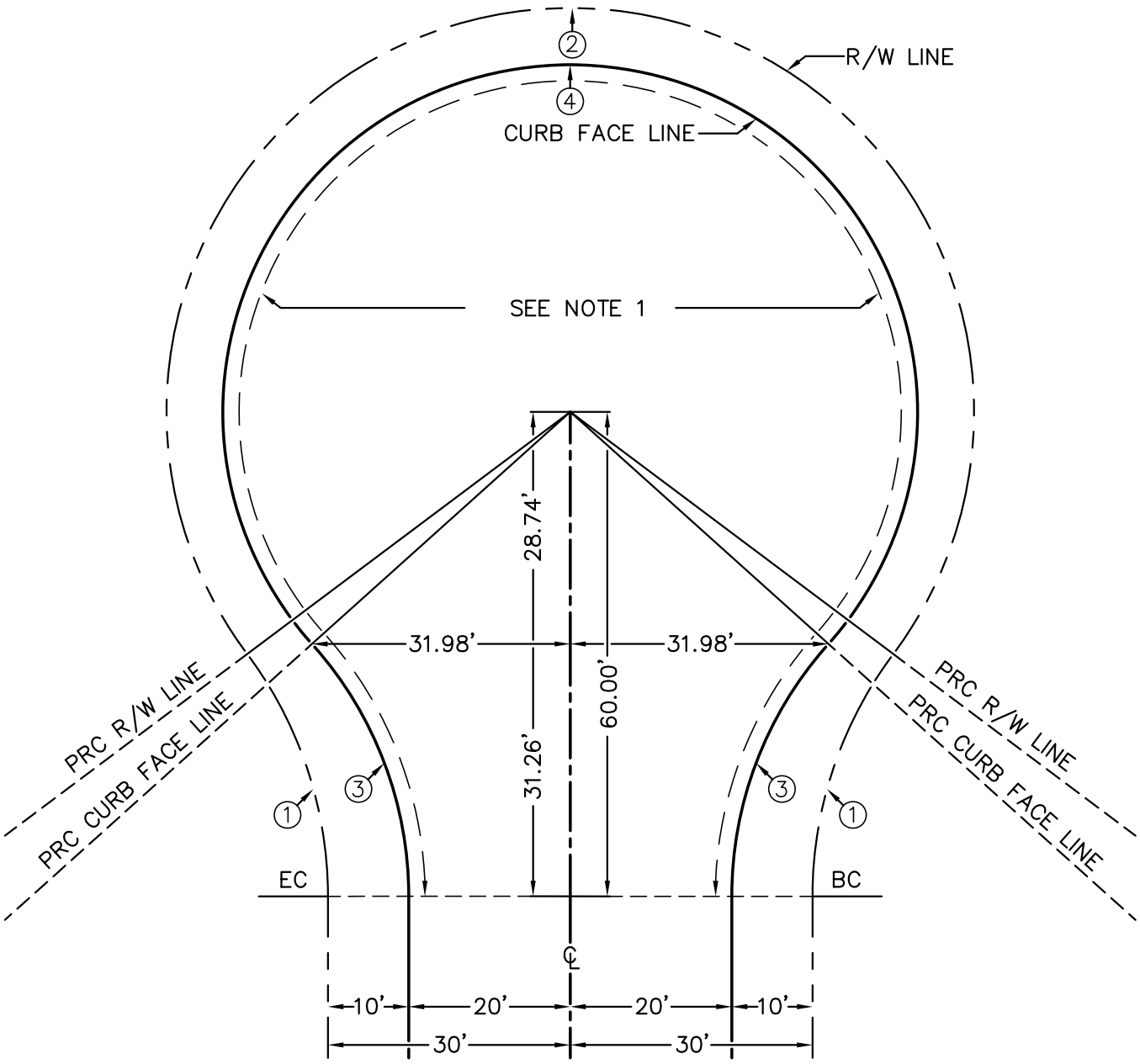

PLAN

NOT TO SCALE

	DELTA	RADIUS	LENGTH	TANGENT
1	36°52'12"	50.00	32.18	16.67
2	253°44'24"	50.00	221.43	66.67
3	41°56'50"	46.76	34.23	17.92
4	263°53'40"	43.00	198.05	47.85

CURVE TABLE

NOTES:

1. HIGH POINT IN CUL-DE-SACS SHALL BE DESIGNED TO PROVIDE POSITIVE DRAINAGE AND NEED NOT BE A VERTICAL CURVE (MINIMUM 0.6% SLOPE).

CITY OF VICTORVILLE - ENGINEERING DEPARTMENT				
REV.	DATE	BY	**TYPICAL CUL-DE-SAC**	**S-26**
	7/16/88	J.A.M.		
1	6/1/07	STAFF	JOHN A. McGLADE, CITY ENGINEER	SHEET 1 OF 1

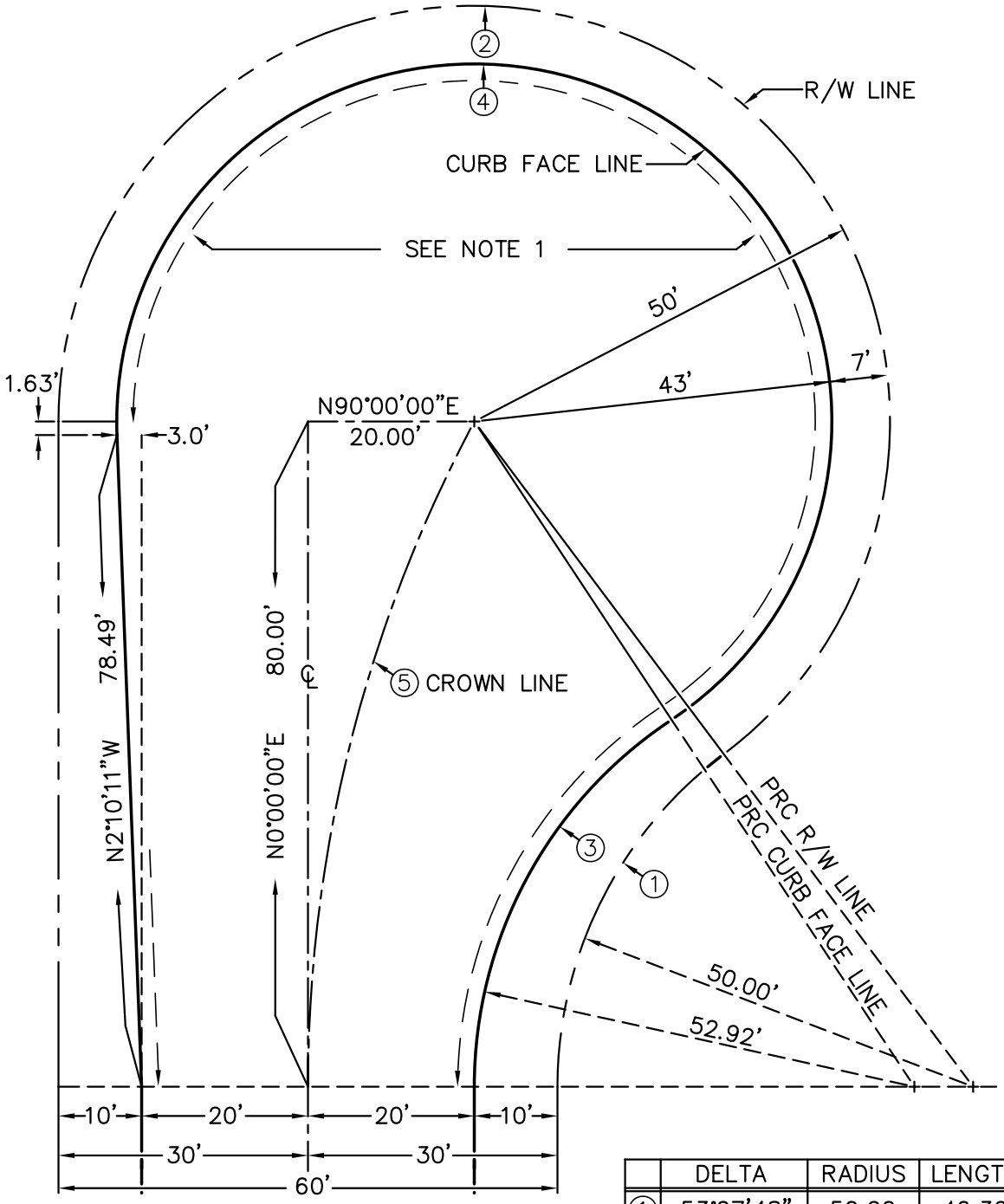

PLAN

NOT TO SCALE

	DELTA	RADIUS	LENGTH	TANGENT
1	53°07'48"	50.00	46.36	25.00
2	233°07'48"	50.00	203.44	100.00
3	56°30'58"	52.92	52.20	28.44
4	238°41'09"	43.00	179.13	76.49
5	28°04'21"	170.00	83.29	42.50

CURVE TABLE

NOTES:

1. HIGH POINT IN CUL-DE-SACS SHALL BE DESIGNED TO PROVIDE POSITIVE DRAINAGE AND NEED NOT BE A VERTICAL CURVE (MINIMUM 0.6% SLOPE).

CITY OF VICTORVILLE - ENGINEERING DEPARTMENT

REV.	DATE	BY		
	7/16/88	J.A.M.	**OFFSET CUL-DE-SAC**	**S-27**
1	6/1/07	STAFF	JOHN A. McGLADE, CITY ENGINEER	SHEET 1 OF 1

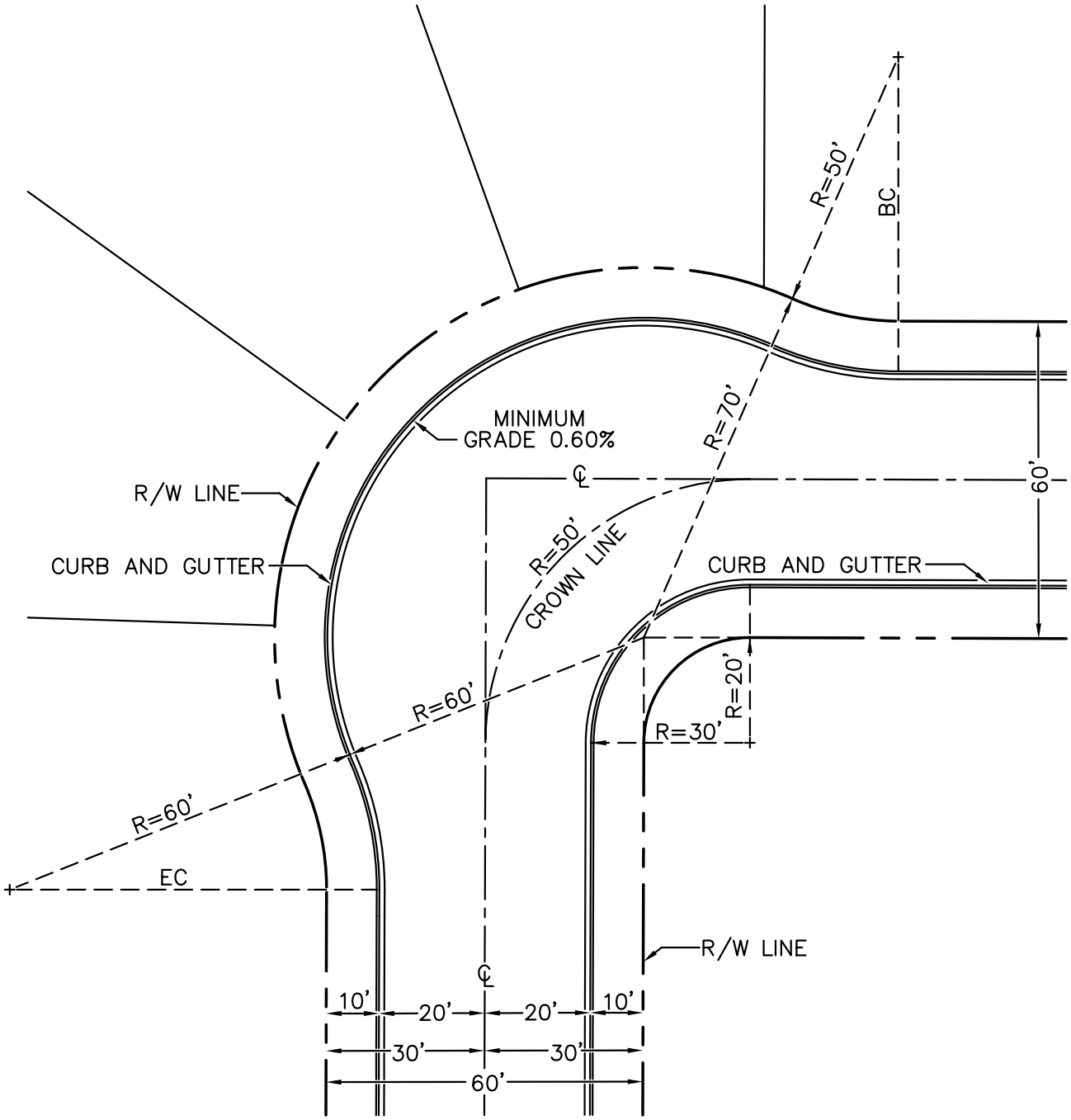

PLAN

NOT TO SCALE

NOTES:

1. ANGLE BETWEEN CENTERLINES TO BE 90° ± 10° MAXIMUM.

CITY OF VICTORVILLE - ENGINEERING DEPARTMENT				
REV.	DATE	BY	**STANDARD KNUCKLE**	**S-28**
	6/1/07	STAFF		
			JOHN A. McGLADE, CITY ENGINEER	SHEET 1 OF 1

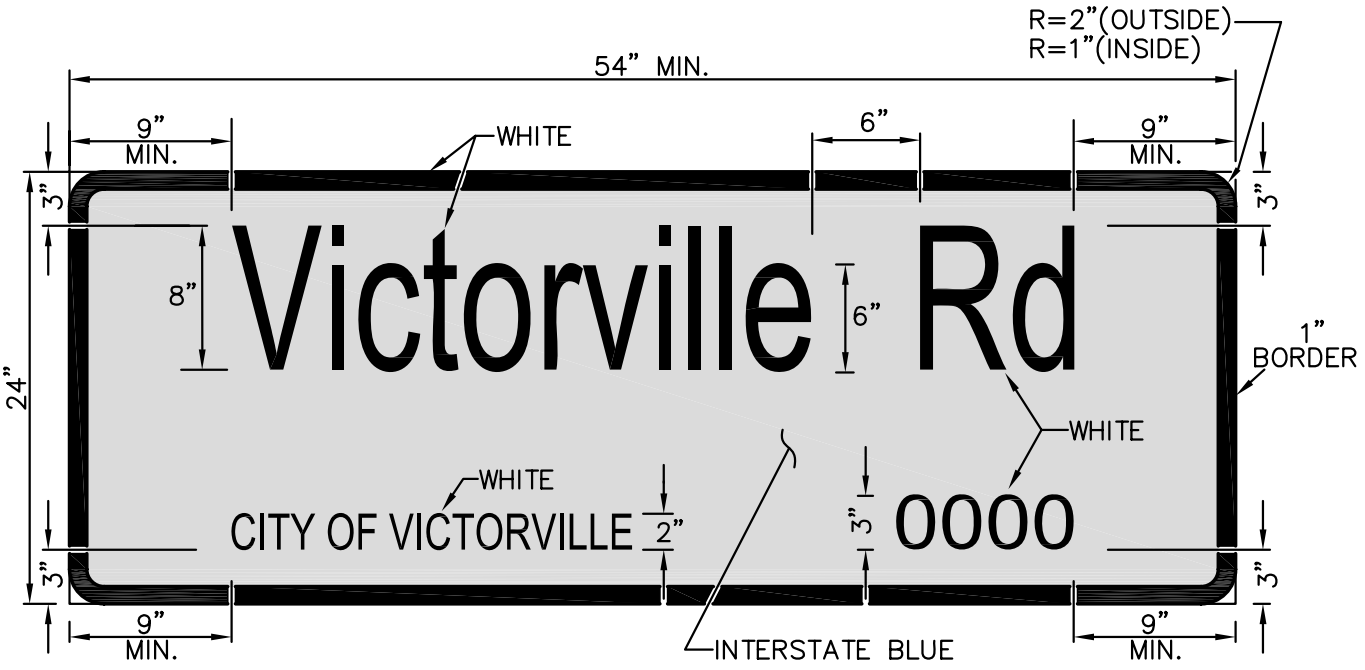

NOTES:

1. SIGN LENGTH SHALL NOT BE LESS THAN 54" WITH A MINIMUM OF 9" RIGHT AND LEFT MARGINS.
2. ONE INCH WHITE BORDER SHALL BE PROVIDED ALONG THE SIGN PERIMETER WITH 1" INSIDE RADIUS AND 2" OUTSIDE RADIUS.
3. LINE 1 LETTERING SHALL BE 8" UPPER CASE AND 6" LOWER CASE TEXT, SERIES D. LINE 2 LETTERING SHALL BE 2" UPPER CASE TEXT, SERIES C. BLOCK NUMBERS SHALL BE 3", SERIES D OR C.
4. COLORS SHALL BE WHITE ON INTERSTATE BLUE.
5. CONTRACTOR SHALL VERIFY BLOCK NUMBER WITH CITY STAFF PRIOR TO ORDERING STREET NAME SIGN.
6. I.I.S.N.S. SIGN TYPE SHALL BE TYPE A.

CITY OF VICTORVILLE - ENGINEERING DEPARTMENT				
REV.	DATE	BY	**INTERNALLY ILLUMINATED STREET NAME SIGN (I.I.S.N.S.)**	**S-29**
	8/4/06	R.D.		
	6/1/07	STAFF	JOHN A. McGLADE, CITY ENGINEER	SHEET 1 OF 1

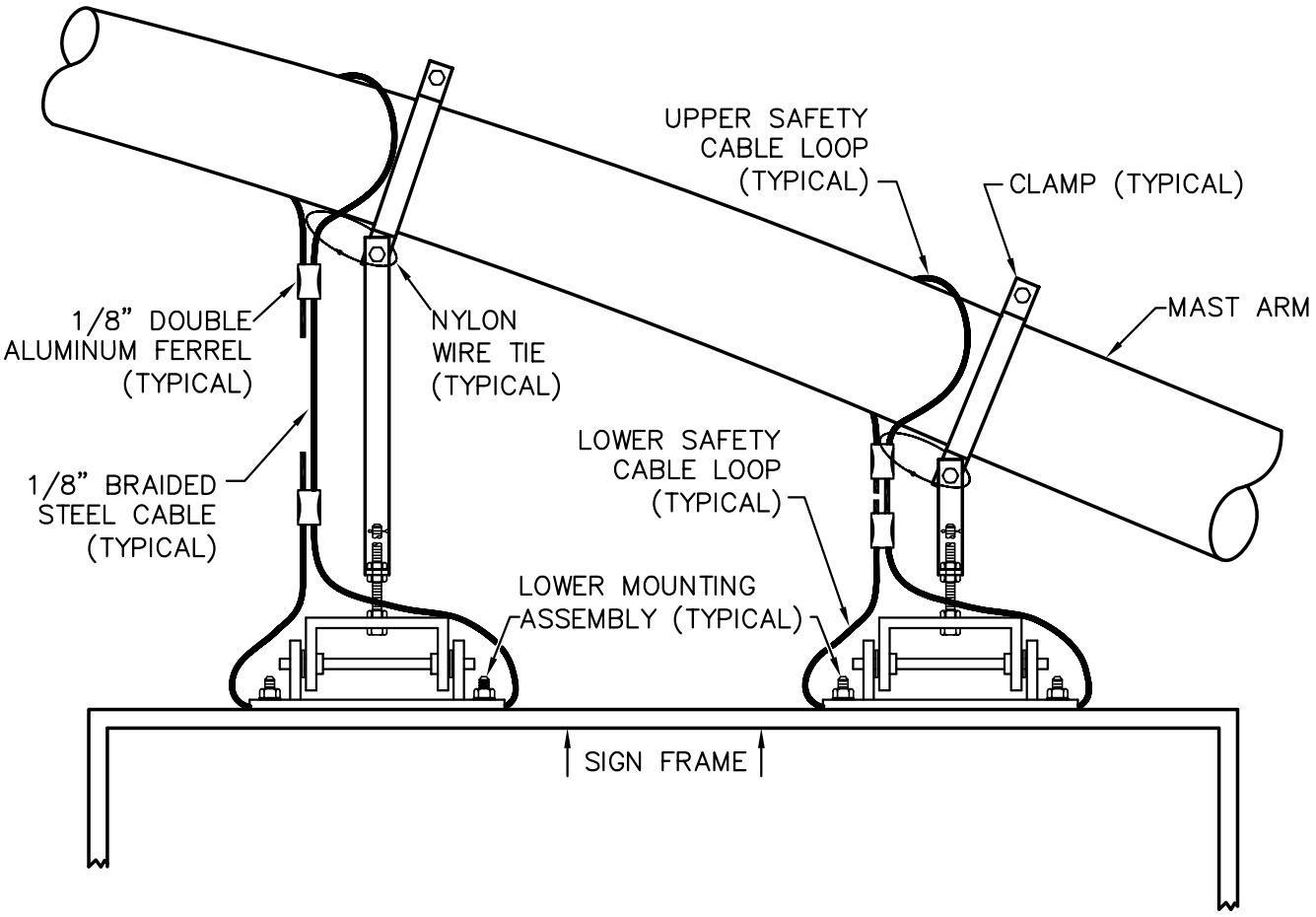

NOTES:

1. BOTH LOWER ASSEMBLIES SHALL HAVE A SAFETY CABLE INSTALLED.
2. MANUFACTURE EACH SAFETY CABLE FROM ONE CONTINUOUS LENGTH OF 1/8" BRAIDED ZINC COATED STEEL CABLE.
3. UPPER SAFETY CABLE LOOP AROUND MAST ARM SHALL BE ON THE UPPER SIDE OF CLAMP. SECURE UPPER SAFETY CABLE LOOP TO CLAMP WITH A NYLON WIRE TIE.
4. LOWER SAFETY CABLE LOOP SHALL BE INSTALLED BETWEEN LOWER MOUNTING ASSEMBLY AND SIGN FRAME.
5. INSTALL 1/8" DOUBLE ALUMINUM FERRULE ON UPPER AND LOWER LOOP ENDS. EACH FERRULE SHALL BE CRIMPED WITH AWG 1 DIE.
6. INSTALLED SAFETY CABLE SHALL NOT ALLOW SIGN TO FALL IN EXCESS OF ONE INCH.

CITY OF VICTORVILLE - ENGINEERING DEPARTMENT				
REV.	DATE	BY	**INTERNALLY ILLUMINATED STREET NAME SIGN (I.I.S.N.S.) SAFETY CABLE**	**S-30**
	5/19/05	M.F. R.D.		
	6/1/07	STAFF	JOHN A. McGLADE, CITY ENGINEER	SHEET 1 OF 1

CITY OF VICTORVILLE
INCORPORATED SEPT. 21, 1962
HOME OF THE SAN BERNARDINO COUNTY FAIR
CALIFORNIA

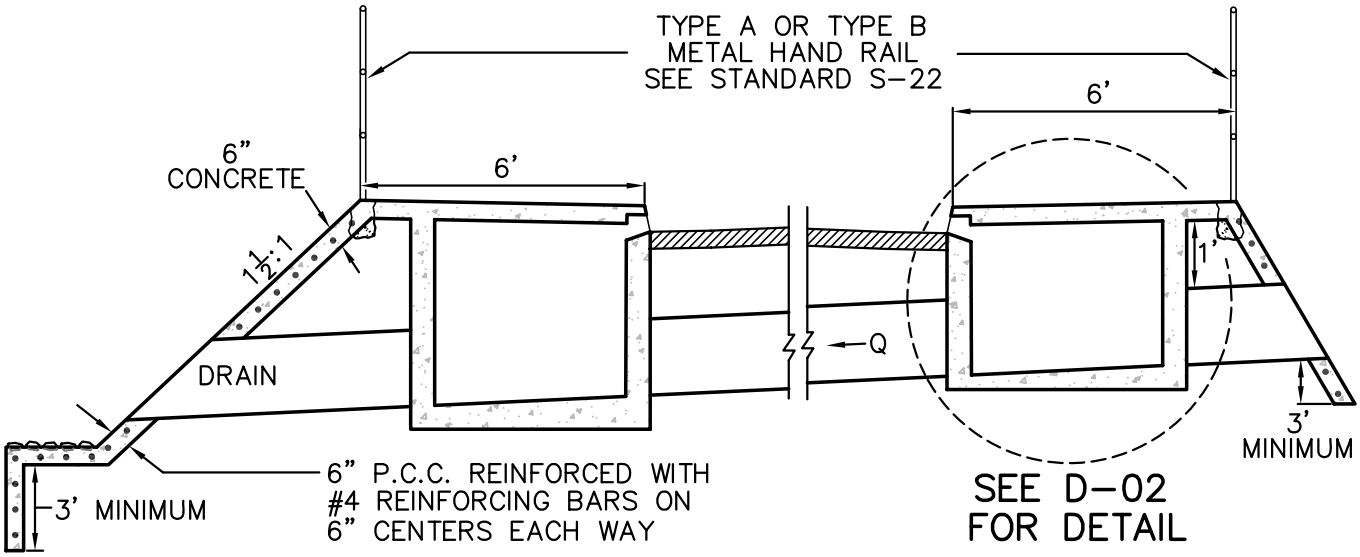

NOTES:

1. ALL CONCRETE SHALL CONTAIN NOT LESS THAN 550 POUNDS OF CEMENTITIOUS MATERIAL PER CUBIC YARD WITH 4% AIR ENTRAINMENT.
2. DOWNSTREAM CUTOFF WALL SHALL EXTEND THREE FEET BELOW CHANNEL BOTTOM OR AS DIRECTED BY THE CITY ENGINEER.
3. SEE DRAWING S-04 FOR SIDEWALK DETAILS.
4. SEE DRAWING S-01 FOR EXPANSION JOINT AND CURB AND GUTTER DETAILS.
5. CATCH BASIN OUTLET CONNECTION TO CULVERT SHALL BE CONSTRUCTED AS DIRECTED BY THE CITY ENGINEER.
6. WASH CROSSINGS MAY BE USED WHERE APPROVED BY THE CITY. THE WASH CROSSING SHALL BE ABLE TO HANDLE A 100 YEAR STORM FLOW AS A DIP WHEN ACTING WITH THE CULVERT. THE CUT-OFF WALLS SHALL EXTEND OVER THE FULL LENGTH OF SUBMERSION OF THE DIP.
7. ON A MAJOR WASH CROSSING THE DEVELOPER MAY DROP THE CURB FACE AND OMIT THE CATCH BASINS BUT SHALL DELINEATE THE ROADWAY AS DIRECTED BY THE CITY ENGINEER.
8. ROCK SLOPE PROTECTION, CONCRETED ROCK SLOPE PROTECTION OR CONCRETE CHANNEL LINING SHALL BE INSTALLED UPSTREAM AND DOWNSTREAM OF THE CROSSING. THE EXTENT AND THICKNESS TO BE BASED ON FLOW VELOCITIES, APPROVED ENGINEERING PRACTICE AND MINIMUMS SET FORTH ON STANDARD DRAWING S-20.

CITY OF VICTORVILLE - ENGINEERING DEPARTMENT				
REV.	DATE	BY	STANDARD WASH CROSSING	D-01A
	4/3/70	M.A.T.		
1	6/1/07	STAFF	JOHN A. McGLADE, CITY ENGINEER	SHEET 1 OF 1

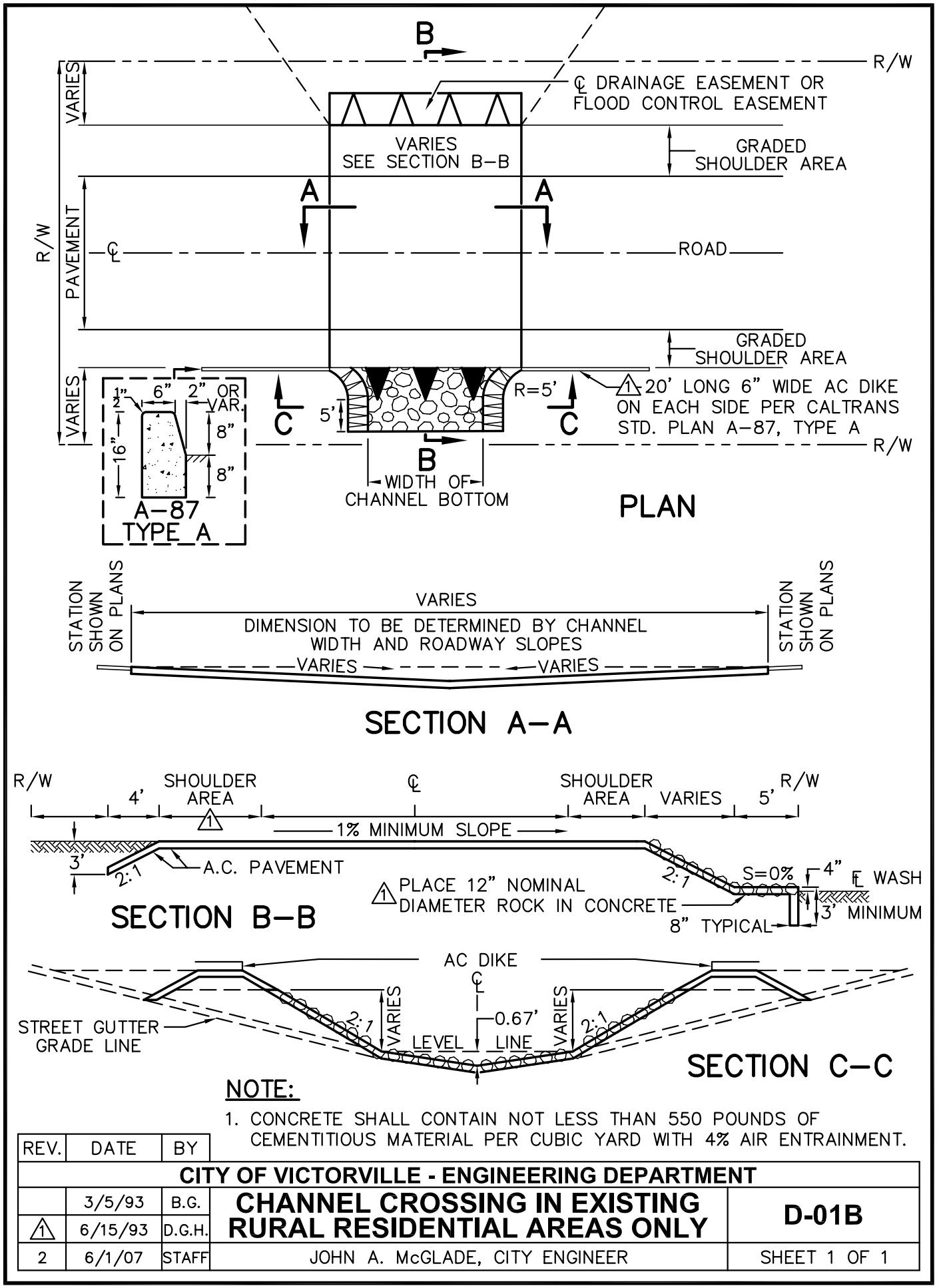

NOTE:

1. CONCRETE SHALL CONTAIN NOT LESS THAN 550 POUNDS OF CEMENTITIOUS MATERIAL PER CUBIC YARD WITH 4% AIR ENTRAINMENT.

REV.	DATE	BY		
			CITY OF VICTORVILLE - ENGINEERING DEPARTMENT	
	3/5/93	B.G.	**CHANNEL CROSSING IN EXISTING RURAL RESIDENTIAL AREAS ONLY**	**D-01B**
1	6/15/93	D.G.H.		
2	6/1/07	STAFF	JOHN A. McGLADE, CITY ENGINEER	SHEET 1 OF 1

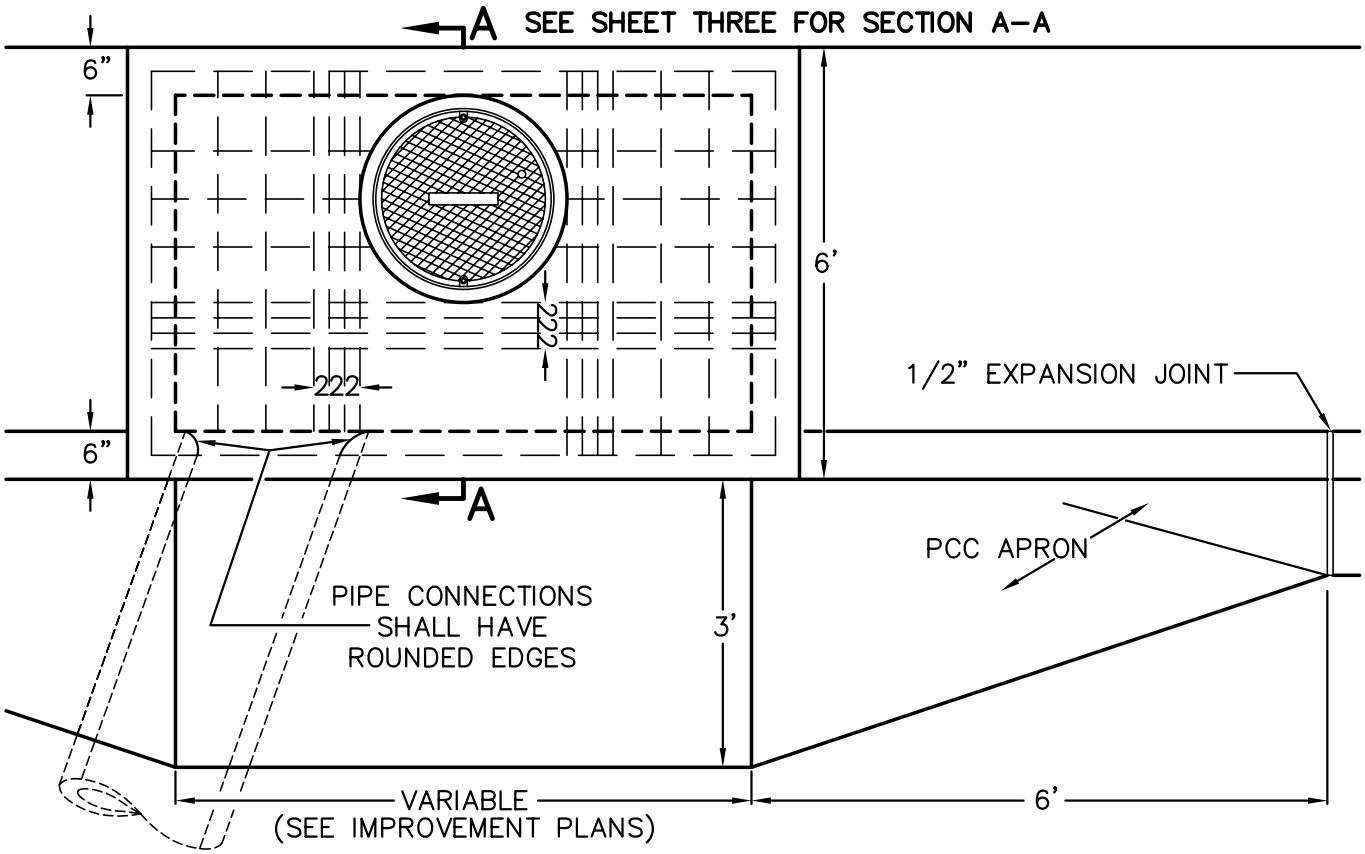

PLAN

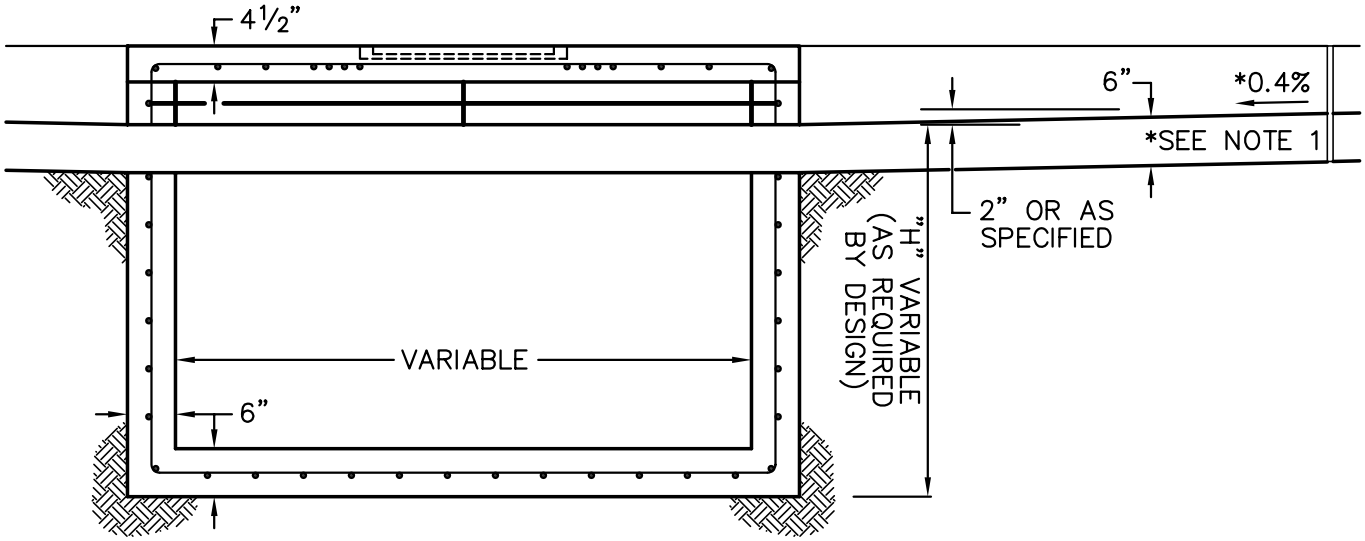

SECTION

NOTES:

1. THE GUTTER CROSS SLOPE SHALL NOT EXCEED 8.33%. THE GUTTER FLOW LINE SHALL NOT BE LESS THAN 0.3% WITHIN 30 FEET OF THE EDGE OF THE DROP INLET OPENING. THE APRON TRANSITION MAY BE EXTENDED UP TO 15 FEET IN LENGTH.

REV.	DATE	BY
	1/26/65	J.H.F.
NOTES	5/1/77	M.A.T.

CITY OF VICTORVILLE - ENGINEERING DEPARTMENT				
BOX WIDTH	3/21/78	X.S.S.	**STANDARD DROP INLET**	**D-02**
NOTES	7/1/94	D.G.H.		
	6/1/07	STAFF	JOHN A. McGLADE, CITY ENGINEER	SHEET 1 OF 3

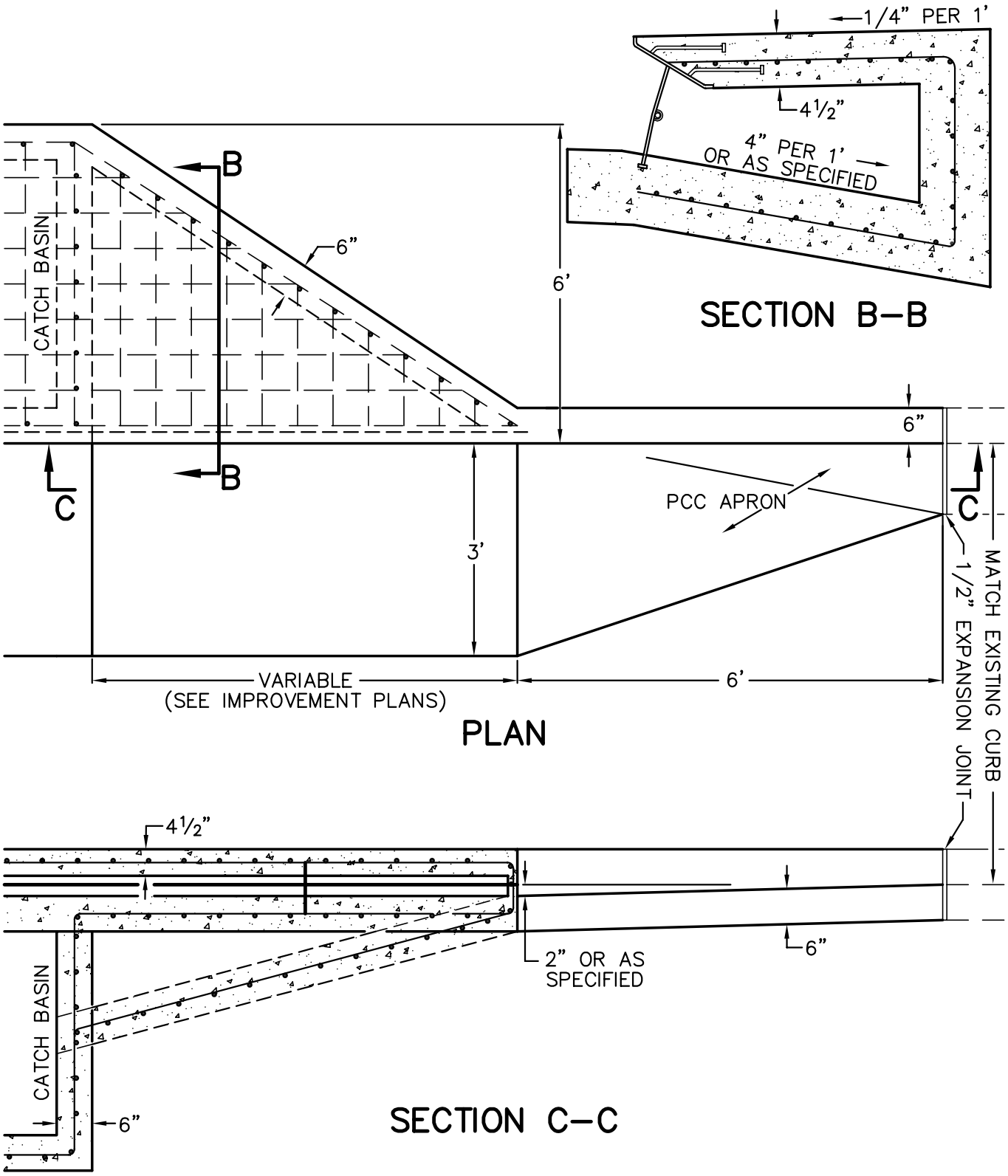

CITY OF VICTORVILLE - ENGINEERING DEPARTMENT				
REV.	DATE	BY	**SIDE INLET FOR STANDARD DROP INLET**	**D-02**
	10/7/76	M.A.T.		
1	6/1/07	STAFF	JOHN A. McGLADE, CITY ENGINEER	SHEET 2 OF 3

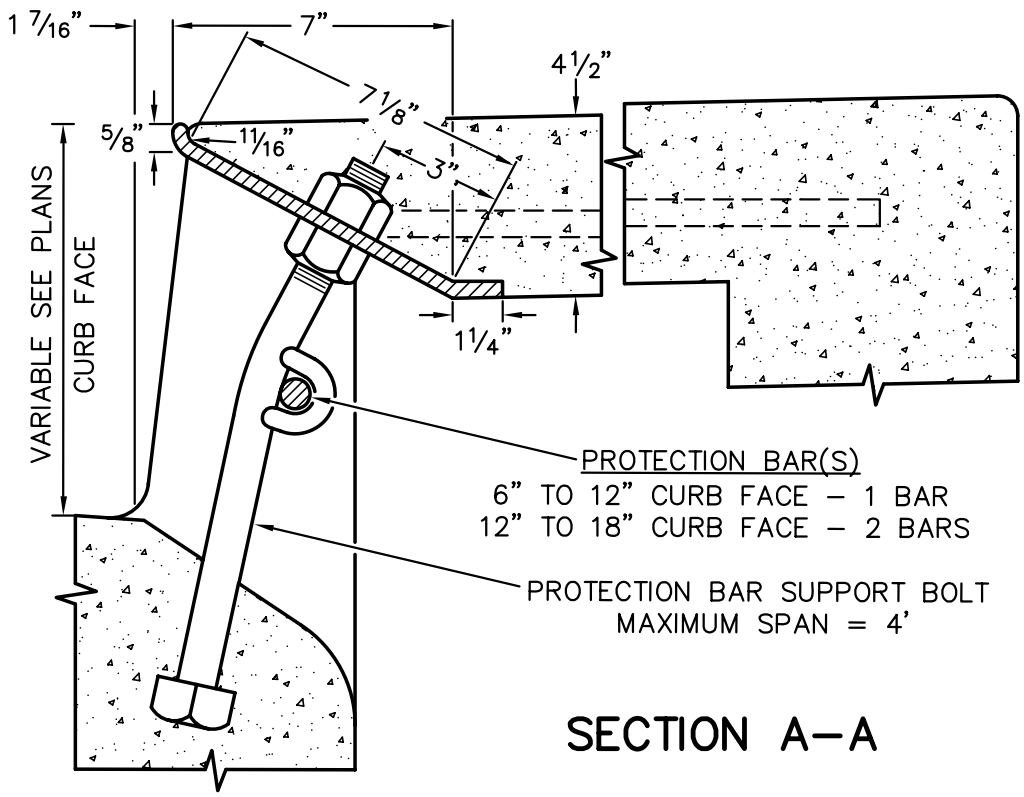

SECTION A–A

NOTES:

1. CONCRETE SHALL BE CLASS 1, PER SECTION 90–1.01 OF STANDARD SPECIFICATIONS.
2. ALL CONCRETE SHALL HAVE 4% AIR ENTRAINMENT.
3. SEE DRAWING S–01 FOR EXPANSION JOINT DETAIL.
4. FLOOR SLOPE SHALL BE 1" PER FOOT TOWARD OUTLET OR AS SPECIFIED ON THE PLANS.
5. REINFORCING SHALL CONSIST OF NO. 4 DEFORMED BARS AT 6" CENTERS EACH WAY UNLESS OTHERWISE NOTED.
6. ALL STEEL REINFORCING SPLICES SHALL BE LAPPED 40 DIAMETERS.
7. ALL STEEL REINFORCING JOINTS SHALL BE BENT TO 1" RADIUS AND EITHER CONTINUED OR LAPPED 40 DIAMETERS.
8. COVER SHALL BE BOLTED DOWN WITH 2 SOCKET SET SCREW BOLTS PER DETAILS ON STANDARD DRAWING D–04.
9. FRAME AND COVER SHALL BE ALHAMBRA FOUNDRY NO. A1530B, GALVANIZED, 22" DIAMETER OPENING OR EQUAL.
10. CURB PROTECTION PLATE SHALL BE ALHAMBRA FOUNDRY NO. A3911 OR EQUAL. PROTECTION BAR SHALL BE ALHAMBRA FOUNDRY A1564 OR EQUAL. PROTECTION BAR SUPPORT BOLTS SHALL BE ALHAMBRA FOUNDRY A1572 OR EQUAL.
11. STEPS – NONE REQUIRED WHERE "H" IS 3'6" OR LESS. INSTALL ONE STEP 16"± ABOVE FLOOR WHEN "H" IS 3'6" TO 5'0". WHERE "H" IS MORE THAN 5'0", STEPS SHALL BE EVENLY SPACED AT 12"± INTERVALS FROM 16"± ABOVE FLOOR TO WITHIN 12"± OF THE TOP OF THE BOX. PLACE STEPS IN WALL WITHOUT PIPE OPENINGS.
12. ALL EXPOSED METAL PARTS SHALL BE GALVANIZED.

REV.	DATE	BY
	1/26/65	J.H.F.

CITY OF VICTORVILLE - ENGINEERING DEPARTMENT

NOTES	5/1/77	M.A.T.	**STANDARD DROP INLET**	**D-02**
NOTES	7/1/94	D.G.H.		
	6/1/07	STAFF	JOHN A. McGLADE, CITY ENGINEER	SHEET 3 OF 3

BLANK INTENTIONALLY

CITY OF VICTORVILLE - ENGINEERING DEPARTMENT				
REV.	DATE	BY	STANDARD DROP INLET	D-03
	2/19/76	X.S.S.		
1	6/1/07	STAFF	JOHN A. McGLADE, CITY ENGINEER	SHEET 1 OF 1

OBSOLETE

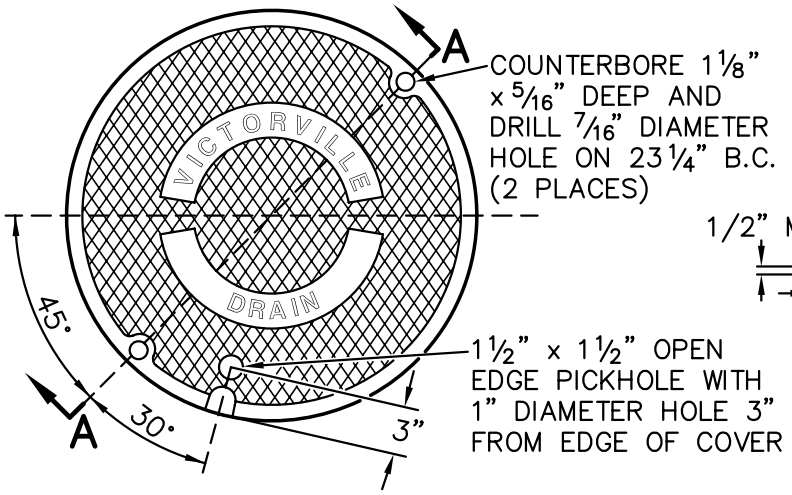

PLATEN COVER TOP VIEW

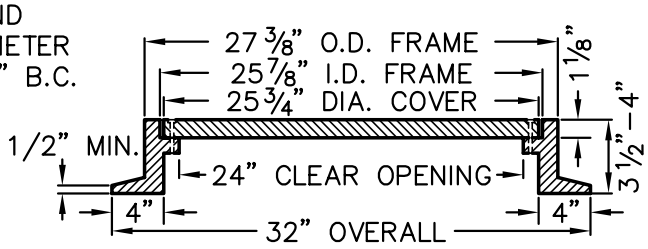

SECTION A–A

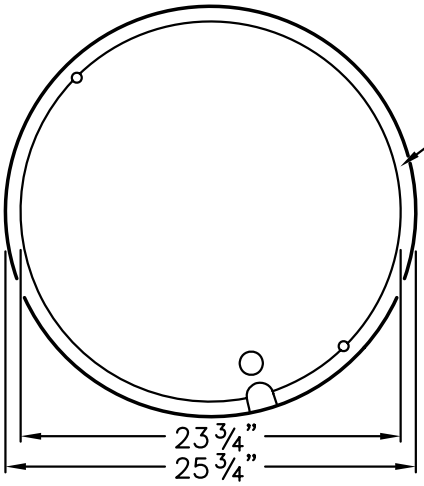

PLATEN COVER BOTTOM VIEW

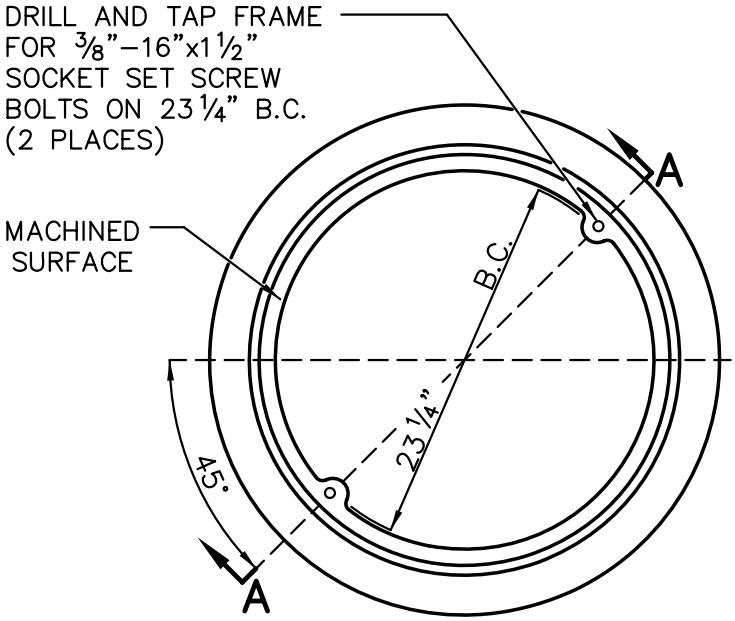

PLAN OF FRAME

NOTES:

1. MANHOLE FRAME AND COVER TO BE MANUFACTURED FROM CLASS 35 CAST IRON PER ASTM A–48.
2. FRAME AND COVER SHALL BE CAPABLE OF SUPPORTING H–20 WHEEL LOADING.
3. COVER SHALL HAVE CAST INTO TOP IN 1" HIGH MINIMUM BLOCK LETTERS "VICTORVILLE" OR "CITY OF VICTORVILLE" AND "DRAIN". MANUFACTURER'S NAME OR INSIGNIA SHALL BE CAST INTO BOTH FRAME AND COVER.
4. MACHINE MATING SURFACES OF FRAME AND COVER TO PROVIDE UNIFORM EDGE SUPPORT FOR COVER.
5. PAINT FRAME AND COVER WITH BLACK BITUMINOUS PAINT.
6. APPROVED SUPPLIERS: ALHAMBRA FOUNDRY #1254, NEENAH FOUNDRY #R–1593 AND SOUTH BAY FOUNDRY #SBF1253B.

CITY OF VICTORVILLE - ENGINEERING DEPARTMENT				
REV.	DATE	BY	STORM DRAIN MANHOLE FRAME AND COVER	D-04
	5/18/93	D.G.H.		
1	6/1/07	STAFF	JOHN A. McGLADE, CITY ENGINEER	SHEET 1 OF 1

DETAIL FOR MANHOLES IN PAVED SURFACES

DETAIL FOR MANHOLES IN EASEMENTS*

* IN AREAS WHERE MANHOLE IS IN A DIRT EASEMENT, A MINIMUM 12" WIDE BY 12" DEEP PAD OR PRE-CAST FRAME AND LID WILL BE REQUIRED AROUND MANHOLE LID AND FRAME

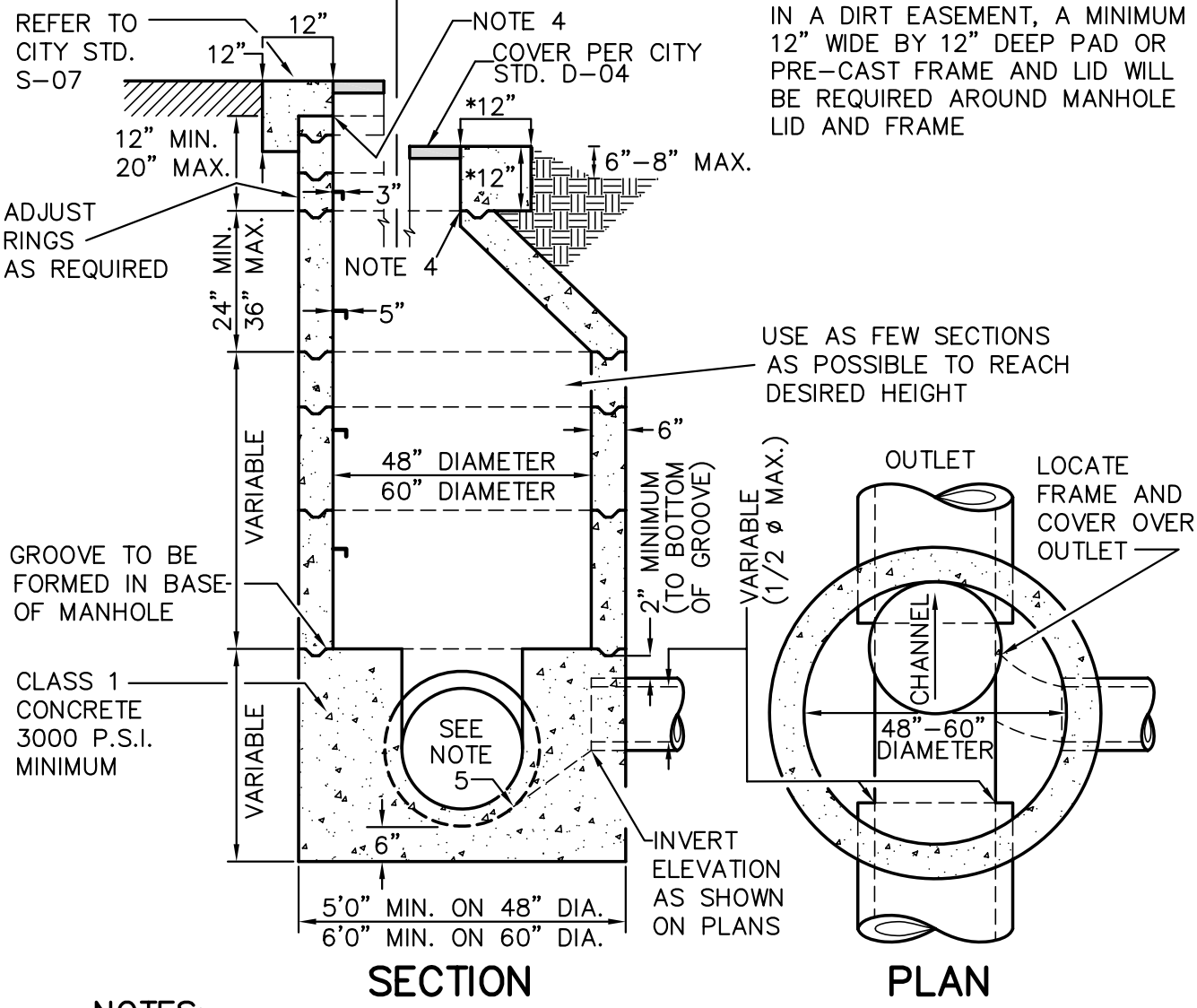

SECTION

PLAN

NOTES:

1. ALL SECTIONS TO BE WASHED TO REMOVE ANY LOOSE MATERIAL AND WHILE STILL WET THEY ARE TO BE SET IN 1:3 MORTAR TRIMMED SMOOTH INSIDE AND OUTSIDE AT TIME OF SETTING INCLUDING FRAME, EXCEPT IN NOTE 3.
2. CONCRETE FOR MANHOLE SECTIONS 3000 P.S.I. MINIMUM.
3. ON ALL EASEMENT MANHOLES, THE CONTRACTOR SHALL ANCHOR FRAME TO CONCRETE SECTIONS BY THE USE OF EPOXY OR OTHER METHOD AS APPROVED BY THE CITY ENGINEER.
4. CONCRETE AROUND AND UNDER FRAME SHALL HAVE A MIX IN ACCORDANCE WITH THE SPECIFICATIONS AND SHALL BE CURED WITH WHITE PIGMENTED CURING COMPOUND.
5. INVERT CHANNELS, SHELF AND GROOVE SHALL BE FORMED MONOLITHICALLY WITH THE MANHOLE BASE. NO REWORKING OF CONCRETE WHICH HAS PARTIALLY HARDENED.

CITY OF VICTORVILLE - ENGINEERING DEPARTMENT				
REV.	DATE	BY	PRECAST STORM DRAIN MANHOLE	D-05
	9/1/75	STAFF		
1	6/1/07	STAFF	JOHN A. MCGLADE, CITY ENGINEER	SHEET 1 OF 1

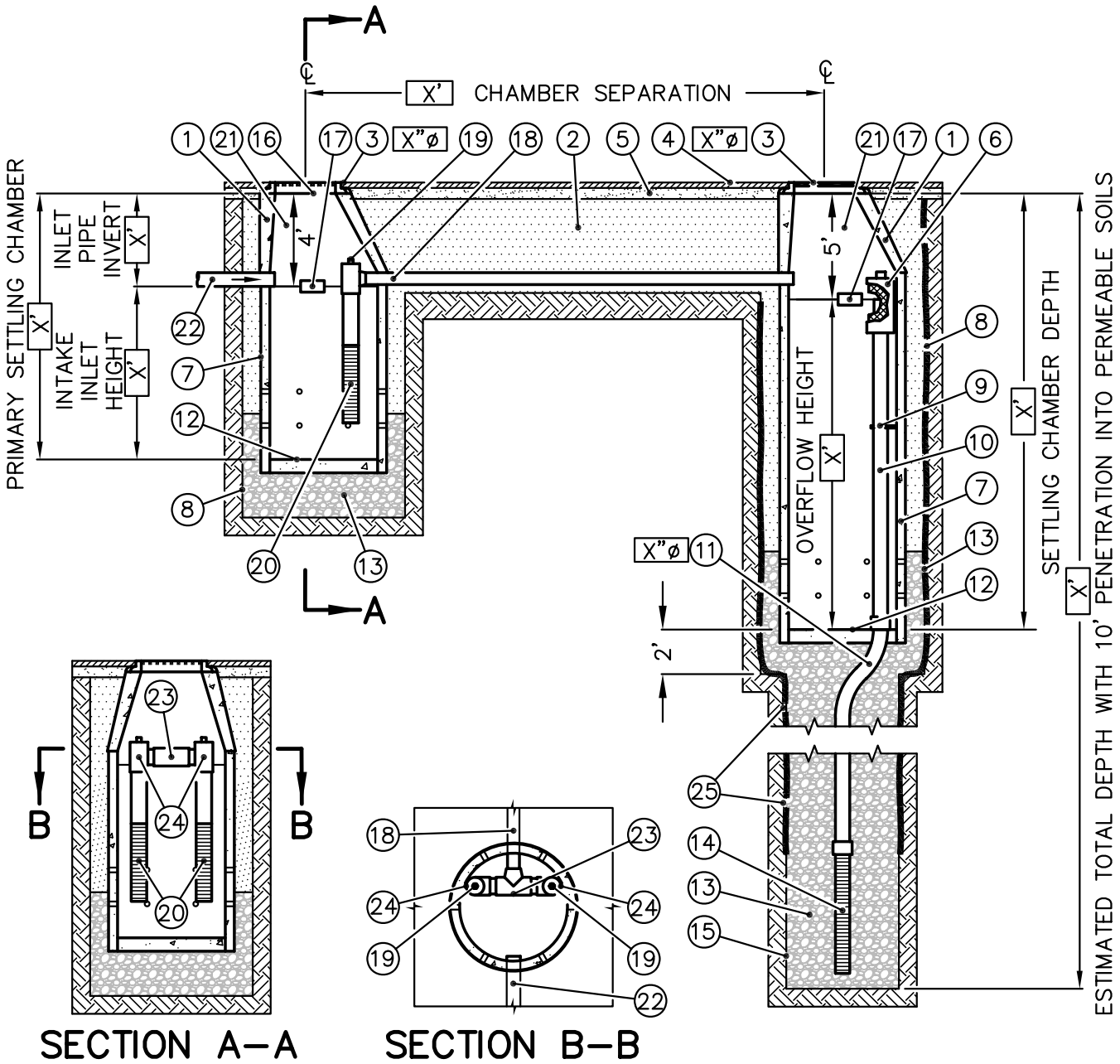

NOTES:

1. CONSTRUCT DRY WELLS PER THE BID SPECIFICATIONS AND PLANS, COMPLETE IN PLACE. DETAILS ARE AS FOLLOWS:

INTERCEPTOR DEPTH = 10 FEET
OVERALL DEPTH = 75 FEET
SETTLING CHAMBER DEPTH = 18 FEET
EFFECTIVE SETTLING CAPACITY = 13 FEET

CONNECTOR PIPE = 4'ø
OVERFLOW PIPE = 6"ø
C.I. RING AND GRATE = 30"ø

CITY OF VICTORVILLE - ENGINEERING DEPARTMENT				
REV.	DATE	BY	DRY WELL SYSTEM DETAILS	D-06
	9/25/00	J.Z.		
1	6/1/07	STAFF	JOHN A. McGLADE, CITY ENGINEER	SHEET 1 OF 2

ITEM NUMBERS:

1. MANHOLE CONE – MODIFIED FLAT BOTTOM. CITY OF VICTORVILLE STD. SS–1, MANHOLE SECTIONS AND CONES COULD BE SUBSTITUTED UPON WRITTEN APPROVAL.
2. STABILIZED BACKFILL – 2 SACK CONCRETE SLURRY.
3. BOLTED RING & GRATE/COVER – DIAMETER AS SHOWN. CLEAN CAST IRON WITH WORDING "CITY OF VICTORVILLE DRYWELL" IN RAISED LETTERS. BOLTED IN 2 LOCATIONS AND SECURED TO CONE WITH MORTAR. RIM ELEVATION ±0.02' OF PLANS, PER CITY STD. D–04.
4. GRADED BASIN OR PAVING (BY OTHERS).
5. COMPACTED BASE MATERIAL (BY OTHERS).
6. DEBRIS SHIELD – ROLLED 16 GA. STEEL X 24" LENGTH WITH VENTED ANTI–SIPHON AND INTERNAL .265" MAX. SWO FLATTENED EXPANDED STEEL SCREEN X 12" LENGTH. FUSION BONDED EPOXY COATED.
7. PRE–CAST LINER – 4000 PSI CONCRETE 48" ID. X 54" OD. CENTER IN HOLE AND ALIGN SECTIONS TO MAXIMIZE BEARING SURFACE.
8. MIN. 6' ø DRILLED SHAFT.
9. SUPPORT BRACKET – FORMED 12 GA. STEEL. FUSION BONDED EPOXY COATED.
10. OVERFLOW PIPE – SCH. 40 PVC MATED TO DRAINAGE PIPE AT BASE SEAL.
11. DRAINAGE PIPE – ADS HIGHWAY GRADE WITH COUPLER. SUSPEND PIPE DURING BACKFILL OPERATIONS TO PREVENT BUCKLING OR BREAKAGE. DIAMETER AS NOTED.
12. BASE SEAL – 4" THICK CONCRETE SLURRY.
13. ROCK – CLEAN AND WASHED 3/8" AGGREGATE.
14. DRAINAGE SCREEN – SCH. 40 PVC 0.120" SLOTTED WELL SCREEN WITH 32 SLOTS PER ROW/FT. DIAMETER VARIES 96" OVERALL LENGTH WITH COUPLER.
15. MIN. 4' ø SHAFT – DRILLED TO MAINTAIN PERMEABILITY OF DRAINAGE SOILS.
16. FABRIC SEAL – U.V. RESISTANT GEOTEXTILE – TO BE REMOVED BY CUSTOMER AT PROJECT COMPLETION.
17. ABSORBENT – HYDROPHOBIC PETROCHEMICAL SPONGE. MIN. 128 OZ. CAPACITY.
18. CONNECTOR PIPE – 4" ø SCH. 40 PVC .
19. VENTED ANTI–SIPHON INTAKE.
20. INTAKE SCREEN – 6" ø SCH. 40 PVC 0.120" MODIFIED SLOTTED WELL SCREEN WITH 32 SLOTS PER ROW/FT. 48" OVERALL LENGTH WITH END CAP.
21. FREEBOARD DEPTH VARIES WITH INLET PIPE ELEVATION. INCREASE PRIMARY/SECONDARY SETTLING CHAMBER DEPTHS AS NEEDED TO MAINTAIN ALL INLET PIPE ELEVATIONS ABOVE CONNECTOR PIPE OVERFLOW.
22. GUTTER DRAIN INLET – 8" SCH 40 PVC, PER CITY STD. D–07.
23. 6" X 4" REDUCING TEE – SCH. 40 PVC, WITH FLOW REGULATOR.
24. 6" TEE – SCH. 40 PVC.
25. NON–WOVEN GEOTEXTILE SLEEVE, MIRAFI 140 NL. MIN. 6 FT ø, HELD APPROX. 10 FEET OFF THE BOTTOM OF EXCAVATION.

CITY OF VICTORVILLE - ENGINEERING DEPARTMENT				
REV.	DATE	BY	DRY WELL SYSTEM DETAILS	D-06
	9/25/00	J.Z.		
1	6/1/07	STAFF	JOHN A. McGLADE, CITY ENGINEER	SHEET 2 OF 2

NOTES:

1. ACTUAL LOCATIONS OF INTERCEPTOR AND DRY WELL WOULD BE FIELD DETERMINED BASED ON LOCATION OF UTILITY LINES AND OTHER OBSTRUCTIONS/LANDSCAPING.
2. DIMENSIONS SHOWN ON THIS SHEET WILL BE USED AS A GUIDE ONLY.
3. CONTRACTOR TO CALL U.S.A. AT LEAST 48 HOURS PRIOR TO FIELD DETERMINATION OF DRY WELL AND INTERCEPTOR.
4. CONTRACTOR TO TAKE DUE PRECAUTIONARY MEASURES TO PROTECT ALL UTILITY LINES AND OBSTRUCTIONS/LANDSCAPING DURING ACTUAL CONSTRUCTION.
5. CONTRACTOR TO RESTORE SITE AS CLOSE AS POSSIBLE BACK TO THE ORIGINAL CONDITIONS AFTER COMPLETION OF WORK.
6. CONCRETE SHALL BE MINOR CONCRETE PER SECTION 90 OF STANDARD SPECIFICATIONS.
7. GUTTER DRAIN DETAIL IS ALHAMBRA FOUNDRY A–1292 GUTTER DRAIN.
8. ALL EXPOSED METAL PARTS SHALL BE GALVANIZED.
9. △1 FOR ALL CONSTRUCTION, INLET OPENINGS SHALL HAVE A LAYER OF FILTER FABRIC OVER THE OPENING AND A SAND BAG CHECK DAM AND BE MAINTAINED IN PLACE UNTIL CONSTRUCTION IS COMPLETED AND STREETS HAVE BEEN CLEANED.
10. △1 CONTRACTOR HAS TO CLEAN AND REMOVE THE SILT AND DEBRIS BUILDUP IN THE INTERCEPTOR AND DRY WELLS PRIOR TO ACCEPTANCE BY THE CITY.

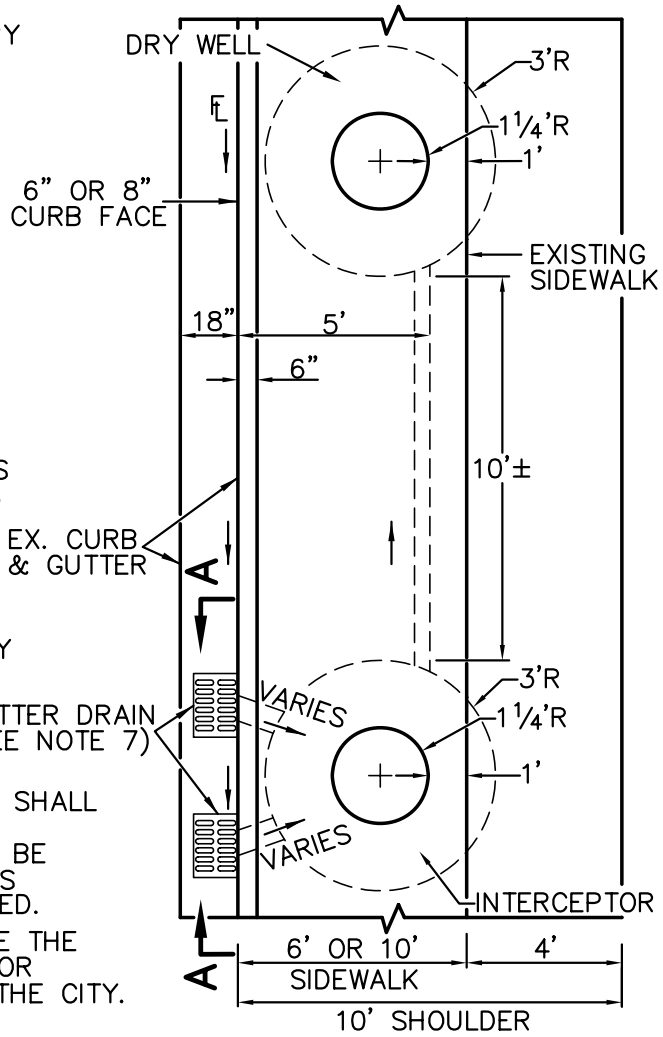

PLAN
NOT TO SCALE

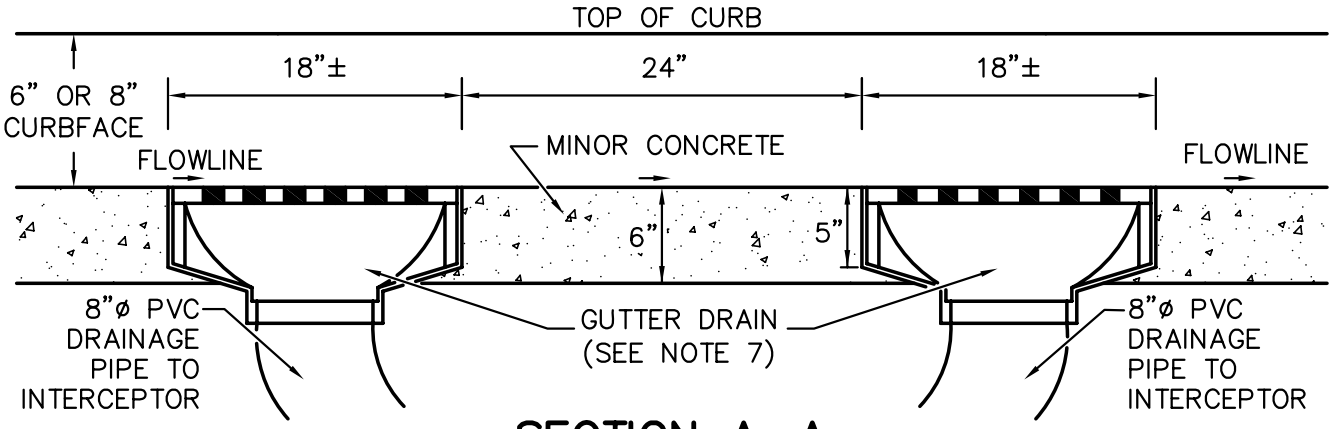

SECTION A–A
NOT TO SCALE

REV.	DATE	BY		
			CITY OF VICTORVILLE - ENGINEERING DEPARTMENT	
	3/11/02	J.Z.	**DRY WELL AND INTERCEPTOR**	**D-07**
△1	10/1/02	J.Z.		
2	6/1/07	STAFF	JOHN A. McGLADE, CITY ENGINEER	SHEET 1 OF 1

CITY OF VICTORVILLE
INCORPORATED SEPT. 21, 1962
HOME OF THE SAN BERNARDINO COUNTY FAIR
CALIFORNIA

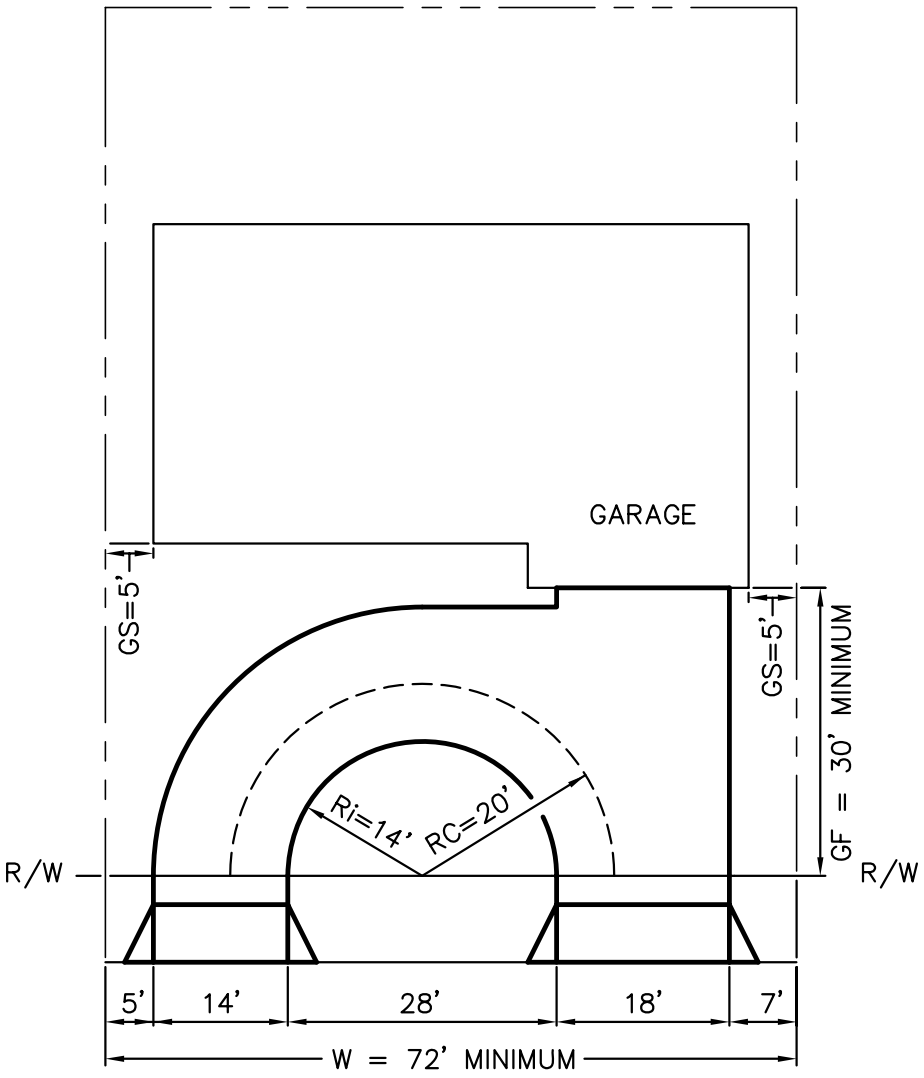

PLAN

NOT TO SCALE

W	GF	GS	Rc	Ri
72'	30'	5'	20'	14'

TABLE

NOTES:

1. ALL DIMENSIONS ARE MINIMUMS AND ARE IN FEET.
   W = LOT WIDTH (AT PROPERTY LINE).
   GF = FRONT YARD SETBACK TO GARAGE WALL AND HOUSE FROM PROPERTY LINE.
   GS = SIDE YARD SETBACK FROM GARAGE WALL TO NEAREST PROPERTY LINE.
   Rc = CENTER TURNING RADIUS OF DRIVEWAY. MINIMUM 20 FEET.
   Ri = INSIDE TURNING RADIUS OF DRIVEWAY.

CITY OF VICTORVILLE - ENGINEERING DEPARTMENT				
REV.	DATE	BY	CIRCULAR DRIVEWAY	GS-01
	1/5/06	B.W.G.		
1	6/1/07	STAFF	JOHN A. McGLADE, CITY ENGINEER	SHEET 1 OF 2

NOTES:

1. ALL DIMENSIONS ARE MINIMUMS.
2. DIMENSIONS MAY NEED TO BE INCREASED TO ALLOW FOR SLOPES ON THE SIDE YARD OR FRONT YARD, MAXIMUM GRADE OF THE DRIVEWAY, LOT DRAINAGE, PLACEMENT OF FIRE HYDRANTS AND/OR STREETLIGHTS OR OTHER CONDITIONS.
3. ASSUMED WIDTH OF DRIVEWAY AND DRIVEWAY APPROACH FOR A TWO-CAR GARAGE IS 18 FEET. DRIVEWAY WIDTHS AND DIMENSIONS FROM EDGE OF DRIVEWAY TO OUTSIDE SURFACE OF GARAGE WALL WILL VARY.
4. ASSUMED DRIVEWAY WIDTH IS 12 FEET AND DRIVEWAY APPROACH WIDTH IS 14 FEET FOR CIRCULAR DRIVEWAY SECOND APPROACH.
5. MINIMUM YARD SETBACKS ARE SUBJECT TO CITY REQUIREMENTS INCLUDING THE MUNICIPAL CODE, THE GENERAL PLAN OR THE SPECIFIC PLAN (IF APPLICABLE).
6. FRONT YARD SETBACK TO GARAGE WALL AND HOUSE FROM PROPERTY LINE (GF) AND SIDE YARD SETBACK FROM GARAGE WALL TO NEAREST PROPERTY LINE (GS) AND THE SETBACKS TO THE GARAGE AND HOUSE ARE NOT NECESSARILY THE SAME AS THE MINIMUM FRONT YARD AND SIDE YARD SETBACKS REQUIRED.
7. THE FOOTPRINT OF THE HOUSE SHOWN IN THIS STANDARD IS AN EXAMPLE ONLY. FOOTPRINTS WILL VARY BUT MUST MEET SETBACK REQUIREMENTS.
8. THE CIRCULAR LAYOUT NEEDS TO BE DESIGNED FOR A SPECIFIC LOT AND INCORPORATED INTO THE PRECISE GRADING PLAN FOR THE LOT.
9. RETAINING WALLS, CURBS AND DRAINAGE SWALES MAY BE REQUIRED TO ACCOMODATE THE DRIVEWAY IMPROVEMENTS ON A LOT. THE PRECISE GRADING PLAN FOR THE LOT MUST SHOW IMPROVEMENTS NECESSARY TO CONSTRUCT THE DRIVEWAY.
10. DRIVEWAY APPROACHES SHALL COMPLY WITH CITY OF VICTORVILLE STANDARD DRAWING NO. S-02.
11. MAXIMUM DRIVEWAY LONGITUDINAL SLOPE (90 DEGREES TO STREET) IS 12%.
12. MAXIMUM DRIVEWAY CROSS SLOPE (PARALLEL TO STREET) IS 6%.
13. MAXIMUM CHANGE OF SLOPE IN DRIVEWAY GRADE BREAK IS 12%.
14. FOR CONSTRUCTION OF CIRCULAR DRIVEWAYS AT EXISTING RESIDENCES, THE CITY ENGINEER MAY GRANT EXCEPTIONS TO THE STANDARDS.

CITY OF VICTORVILLE - ENGINEERING DEPARTMENT				
REV.	DATE	BY	**CIRCULAR DRIVEWAY**	**GS-01**
	1/5/06	B.W.G.		
1	6/1/07	STAFF	JOHN A. McGLADE, CITY ENGINEER	SHEET 2 OF 2

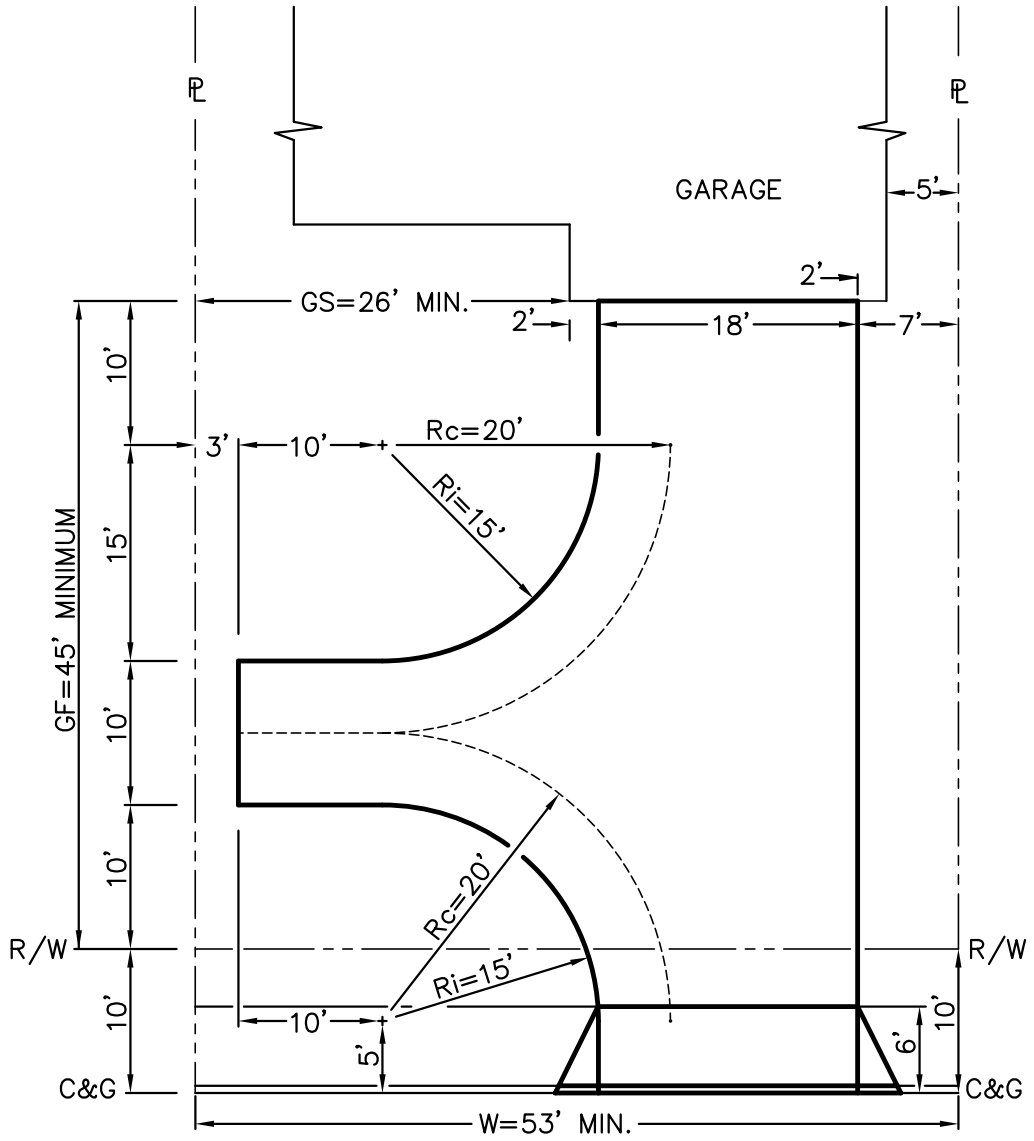

GARAGE FACING STREET
HAMMERHEAD TO LOT EXTERIOR

PLAN

N.T.S.

W	GF	GS	Rc	Ri
53'	45'	26'	20'	15'

TABLE

ABBREVIATIONS

W = LOT WIDTH (AT PROPERTY LINE).
GF = FRONT YARD SETBACK TO GARAGE WALL AND HOUSE FROM PROPERTY LINE.
GS = SIDE YARD SETBACK TO GARAGE WALL FROM PROPERTY LINE NEAREST HAMMERHEAD.
Rc = CENTER TURNING RADIUS OF DRIVEWAY. MINIMUM 20 FEET.
Ri = INSIDE TURNING RADIUS OF DRIVEWAY.

CITY OF VICTORVILLE - ENGINEERING DEPARTMENT				
REV.	DATE	BY	**HAMMERHEAD DRIVEWAY TYPE 1**	**GS-02**
	1/5/06	B.W.G.		
1	6/1/07	STAFF	JOHN A. McGLADE, CITY ENGINEER	SHEET 1 OF 2

NOTES:

1. ALL DIMENSIONS ARE MINIMUMS.
2. DIMENSIONS MAY NEED TO BE INCREASED TO ALLOW FOR SLOPES ON THE SIDE YARD OR FRONT YARD, MAXIMUM GRADE OF THE DRIVEWAY, LOT DRAINAGE, PLACEMENT OF FIRE HYDRANTS AND/OR STREETLIGHTS OR OTHER CONDITIONS.
3. ASSUMED WIDTH OF DRIVEWAY AND DRIVEWAY APPROACH FOR A TWO-CAR GARAGE IS 18 FEET. DRIVEWAY WIDTHS AND DIMENSIONS FROM EDGE OF DRIVEWAY TO OUTSIDE SURFACE OF GARAGE WALL WILL VARY.
4. MINIMUM YARD SETBACKS ARE SUBJECT TO CITY REQUIREMENTS INCLUDING THE MUNICIPAL CODE, THE GENERAL PLAN OR THE SPECIFIC PLAN (IF APPLICABLE).
5. FRONT YARD SETBACK TO GARAGE WALL AND HOUSE FROM PROPERTY LINE (GF) AND SIDE YARD SETBACK TO GARAGE WALL FROM PROPERTY LINE NEAREST HAMMERHEAD (GS) AND THE SETBACKS TO THE GARAGE ARE NOT NECESSARILY THE SAME AS THE MINIMUM FRONT YARD AND SIDE YARD SETBACKS REQUIRED.
6. THE FOOTPRINT OF THE HOUSE SHOWN IN THIS STANDARD IS AN EXAMPLE ONLY. FOOTPRINTS WILL VARY BUT MUST MEET SETBACK REQUIREMENTS.
7. THE HAMMERHEAD LAYOUT NEEDS TO BE DESIGNED FOR A SPECIFIC LOT AND INCORPORATED INTO THE PRECISE GRADING PLAN FOR THE LOT.
8. RETAINING WALLS, CURBS AND DRAINAGE SWALES MAY BE REQUIRED TO ACCOMODATE THE DRIVEWAY IMPROVEMENTS ON A LOT. THE PRECISE GRADING PLAN FOR THE LOT MUST SHOW IMPROVEMENTS NECESSARY TO CONSTRUCT THE DRIVEWAY.
9. DRIVEWAY APPROACH SHALL COMPLY WITH CITY OF VICTORVILLE STANDARD DRAWING NO. S-02 WHERE CURB AND GUTTER EXISTS.
10. MAXIMUM DRIVEWAY LONGITUDINAL SLOPE (90 DEGREES TO STREET) IS 12%.
11. MAXIMUM DRIVEWAY CROSS SLOPE (PARALLEL TO STREET) IS 6%.
12. MAXIMUM CHANGE OF SLOPE IN DRIVEWAY GRADE BREAK IS 12%.
13. FOR CONSTRUCTION OF HAMMERHEAD DRIVEWAYS AT EXISTING RESIDENCES, THE CITY ENGINEER MAY GRANT EXCEPTIONS TO THE STANDARDS.

CITY OF VICTORVILLE - ENGINEERING DEPARTMENT				
REV.	DATE	BY	**HAMMERHEAD DRIVEWAY TYPE 1**	**GS-02**
	1/5/06	B.W.G.		
1	6/1/07	STAFF	JOHN A. McGLADE, CITY ENGINEER	SHEET 2 OF 2

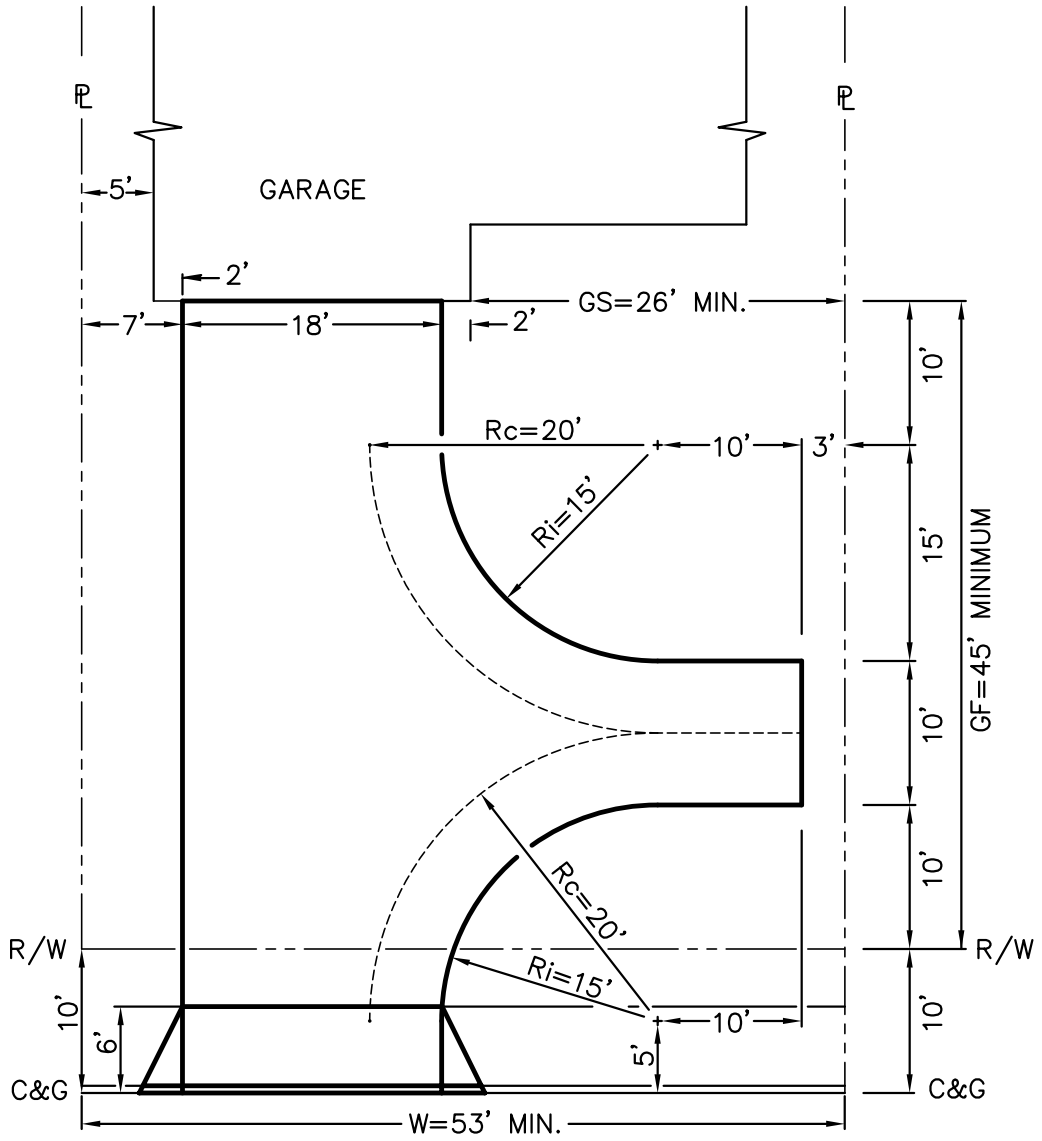

GARAGE FACING STREET
HAMMERHEAD TO LOT INTERIOR

PLAN

N.T.S.

W	GF	GS	Rc	Ri
53'	45'	26'	20'	15'

TABLE

ABBREVIATIONS

W = LOT WIDTH (AT PROPERTY LINE).
GF = FRONT YARD SETBACK TO GARAGE WALL AND HOUSE FROM PROPERTY LINE.
GS = SIDE YARD SETBACK TO GARAGE WALL FROM PROPERTY LINE NEAREST HAMMERHEAD.
Rc = CENTER TURNING RADIUS OF DRIVEWAY. MINIMUM 20 FEET.
Ri = INSIDE TURNING RADIUS OF DRIVEWAY.

CITY OF VICTORVILLE - ENGINEERING DEPARTMENT				
REV.	DATE	BY	**HAMMERHEAD DRIVEWAY TYPE 2**	**GS-03**
	1/5/06	B.W.G.		
1	6/1/07	STAFF	JOHN A. McGLADE, CITY ENGINEER	SHEET 1 OF 2

NOTES:

1. ALL DIMENSIONS ARE MINIMUMS.
2. DIMENSIONS MAY NEED TO BE INCREASED TO ALLOW FOR SLOPES ON THE SIDE YARD OR FRONT YARD, MAXIMUM GRADE OF THE DRIVEWAY, LOT DRAINAGE, PLACEMENT OF FIRE HYDRANTS AND/OR STREETLIGHTS OR OTHER CONDITIONS.
3. ASSUMED WIDTH OF DRIVEWAY AND DRIVEWAY APPROACH FOR A TWO-CAR GARAGE IS 18 FEET. DRIVEWAY WIDTHS AND DIMENSIONS FROM EDGE OF DRIVEWAY TO OUTSIDE SURFACE OF GARAGE WALL WILL VARY.
4. MINIMUM YARD SETBACKS ARE SUBJECT TO CITY REQUIREMENTS INCLUDING THE MUNICIPAL CODE, THE GENERAL PLAN OR THE SPECIFIC PLAN (IF APPLICABLE).
5. FRONT YARD SETBACK TO GARAGE WALL AND HOUSE FROM PROPERTY LINE (GF) AND SIDE YARD SETBACK TO GARAGE WALL FROM PROPERTY LINE NEAREST HAMMERHEAD (GS) AND THE SETBACKS TO THE GARAGE ARE NOT NECESSARILY THE SAME AS THE MINIMUM FRONT YARD AND SIDE YARD SETBACKS REQUIRED.
6. THE FOOTPRINT OF THE HOUSE SHOWN IN THIS STANDARD IS AN EXAMPLE ONLY. FOOTPRINTS WILL VARY BUT MUST MEET SETBACK REQUIREMENTS.
7. THE HAMMERHEAD LAYOUT NEEDS TO BE DESIGNED FOR A SPECIFIC LOT AND INCORPORATED INTO THE PRECISE GRADING PLAN FOR THE LOT.
8. RETAINING WALLS, CURBS AND DRAINAGE SWALES MAY BE REQUIRED TO ACCOMODATE THE DRIVEWAY IMPROVEMENTS ON A LOT. THE PRECISE GRADING PLAN FOR THE LOT MUST SHOW IMPROVEMENTS NECESSARY TO CONSTRUCT THE DRIVEWAY.
9. DRIVEWAY APPROACH SHALL COMPLY WITH CITY OF VICTORVILLE STANDARD DRAWING NO. S-02 WHERE CURB AND GUTTER EXISTS.
10. MAXIMUM DRIVEWAY LONGITUDINAL SLOPE (90 DEGREES TO STREET) IS 12%.
11. MAXIMUM DRIVEWAY CROSS SLOPE (PARALLEL TO STREET) IS 6%.
12. MAXIMUM CHANGE OF SLOPE IN DRIVEWAY GRADE BREAK IS 12%.
13. FOR CONSTRUCTION OF HAMMERHEAD DRIVEWAYS AT EXISTING RESIDENCES, THE CITY ENGINEER MAY GRANT EXCEPTIONS TO THE STANDARDS.

CITY OF VICTORVILLE - ENGINEERING DEPARTMENT				
REV.	DATE	BY	**HAMMERHEAD DRIVEWAY TYPE 2**	**GS-03**
	1/5/06	B.W.G.		
1	6/1/07	STAFF	JOHN A. McGLADE, CITY ENGINEER	SHEET 2 OF 2

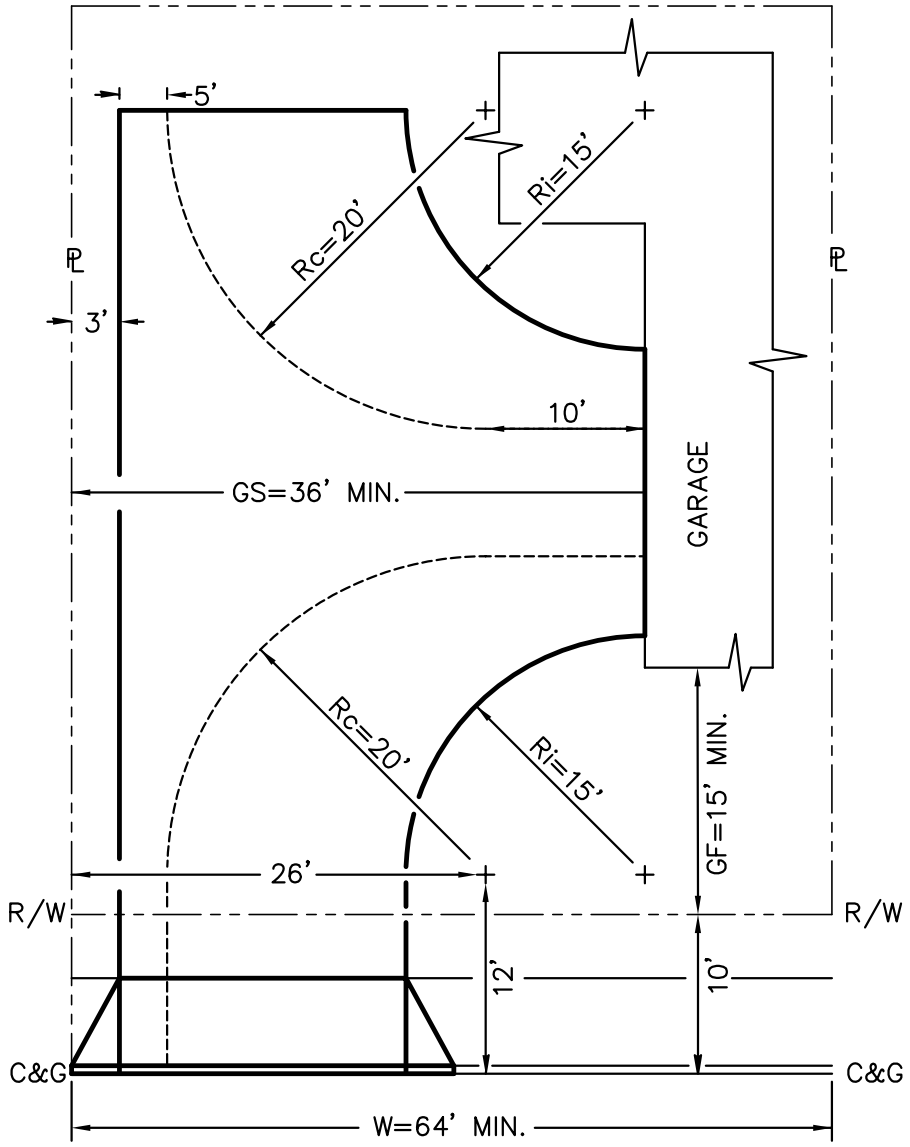

GARAGE FACING SIDE
HAMMERHEAD TO BACK OF LOT

PLAN

N.T.S.

W	GF	GS	Rc	Ri
64'	15'	36'	20'	15'

TABLE

ABBREVIATIONS

W = LOT WIDTH (AT PROPERTY LINE).
GF = FRONT YARD SETBACK TO GARAGE WALL AND HOUSE FROM PROPERTY LINE.
GS = SIDE YARD SETBACK TO GARAGE WALL FROM PROPERTY LINE NEAREST HAMMERHEAD.
Rc = CENTER TURNING RADIUS OF DRIVEWAY. MINIMUM 20 FEET.
Ri = INSIDE TURNING RADIUS OF DRIVEWAY.

CITY OF VICTORVILLE - ENGINEERING DEPARTMENT				
REV.	DATE	BY	HAMMERHEAD DRIVEWAY TYPE 3	GS-04
	1/5/06	B.W.G.		
1	6/1/07	STAFF	JOHN A. McGLADE, CITY ENGINEER	SHEET 1 OF 2

NOTES:

1. ALL DIMENSIONS ARE MINIMUMS.
2. DIMENSIONS MAY NEED TO BE INCREASED TO ALLOW FOR SLOPES ON THE SIDE YARD OR FRONT YARD, MAXIMUM GRADE OF THE DRIVEWAY, LOT DRAINAGE, PLACEMENT OF FIRE HYDRANTS AND/OR STREETLIGHTS OR OTHER CONDITIONS.
3. ASSUMED WIDTH OF DRIVEWAY AND DRIVEWAY APPROACH FOR A TWO-CAR GARAGE IS 18 FEET. DRIVEWAY WIDTHS AND DIMENSIONS FROM EDGE OF DRIVEWAY TO OUTSIDE SURFACE OF GARAGE WALL WILL VARY.
4. MINIMUM YARD SETBACKS ARE SUBJECT TO CITY REQUIREMENTS INCLUDING THE MUNICIPAL CODE, THE GENERAL PLAN OR THE SPECIFIC PLAN (IF APPLICABLE).
5. FRONT YARD SETBACK TO GARAGE WALL AND HOUSE FROM PROPERTY LINE (GF) AND SIDE YARD SETBACK TO GARAGE WALL FROM PROPERTY LINE NEAREST HAMMERHEAD (GS) AND THE SETBACKS TO THE GARAGE ARE NOT NECESSARILY THE SAME AS THE MINIMUM FRONT YARD AND SIDE YARD SETBACKS REQUIRED.
6. THE FOOTPRINT OF THE HOUSE SHOWN IN THIS STANDARD IS AN EXAMPLE ONLY. FOOTPRINTS WILL VARY BUT MUST MEET SETBACK REQUIREMENTS.
7. THE HAMMERHEAD LAYOUT NEEDS TO BE DESIGNED FOR A SPECIFIC LOT AND INCORPORATED INTO THE PRECISE GRADING PLAN FOR THE LOT.
8. RETAINING WALLS, CURBS AND DRAINAGE SWALES MAY BE REQUIRED TO ACCOMODATE THE DRIVEWAY IMPROVEMENTS ON A LOT. THE PRECISE GRADING PLAN FOR THE LOT MUST SHOW IMPROVEMENTS NECESSARY TO CONSTRUCT THE DRIVEWAY.
9. DRIVEWAY APPROACH SHALL COMPLY WITH CITY OF VICTORVILLE STANDARD DRAWING NO. S-02 WHERE CURB AND GUTTER EXISTS.
10. MAXIMUM DRIVEWAY LONGITUDINAL SLOPE (90 DEGREES TO STREET) IS 12%.
11. MAXIMUM DRIVEWAY CROSS SLOPE (PARALLEL TO STREET) IS 6%.
12. MAXIMUM CHANGE OF SLOPE IN DRIVEWAY GRADE BREAK IS 12%.
13. FOR CONSTRUCTION OF HAMMERHEAD DRIVEWAYS AT EXISTING RESIDENCES, THE CITY ENGINEER MAY GRANT EXCEPTIONS TO THE STANDARDS.

CITY OF VICTORVILLE - ENGINEERING DEPARTMENT				
REV.	DATE	BY	**HAMMERHEAD DRIVEWAY TYPE 3**	**GS-04**
	1/5/06	B.W.G.		
1	6/1/07	STAFF	JOHN A. McGLADE, CITY ENGINEER	SHEET 2 OF 2

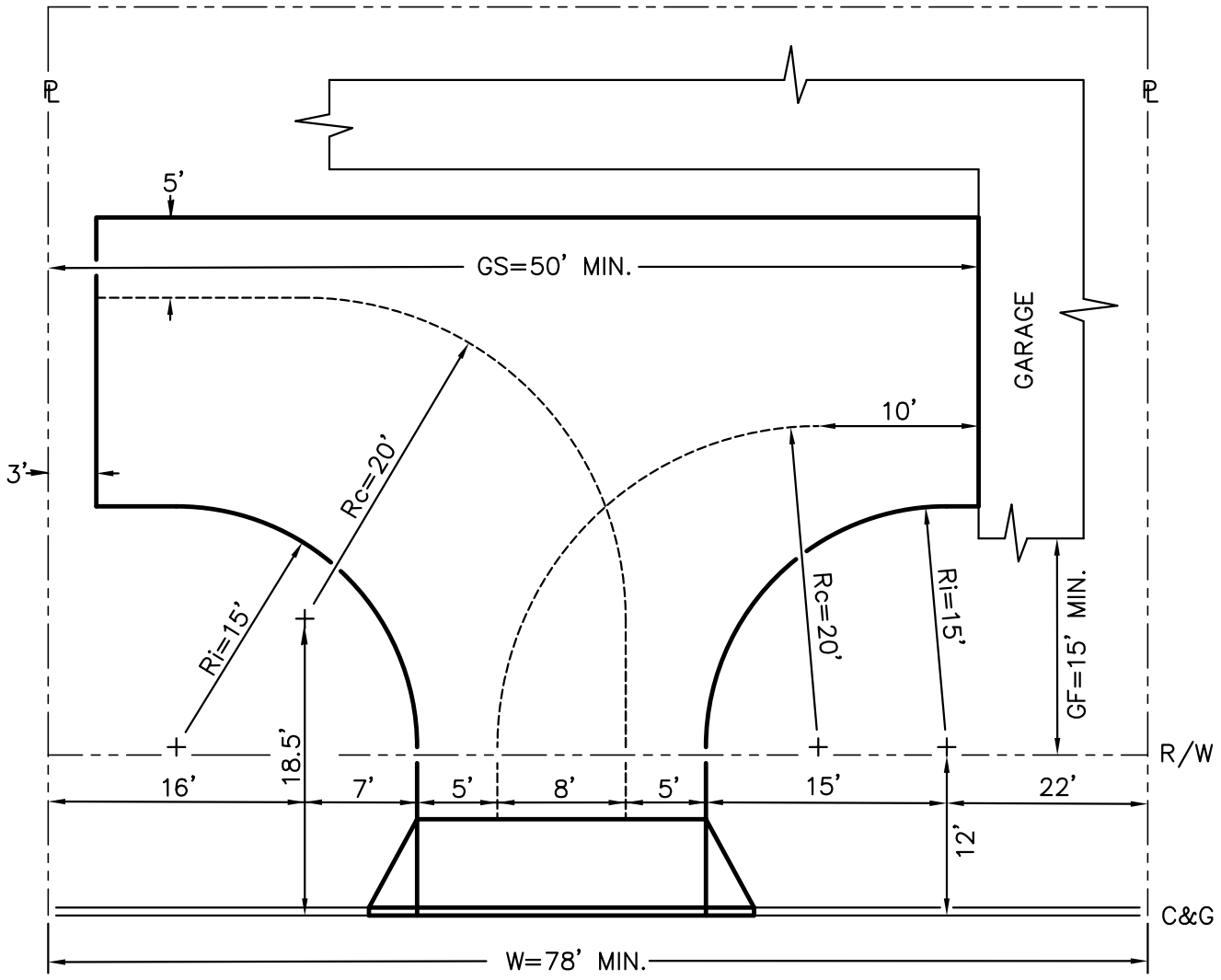

GARAGE FACING SIDE
HAMMERHEAD TO LOT EXTERIOR

PLAN

N.T.S.

W	GF	GS	Rc	Ri
78'	15'	50'	20'	15'

TABLE

ABBREVIATIONS

W = LOT WIDTH (AT PROPERTY LINE).
GF = FRONT YARD SETBACK TO GARAGE WALL AND HOUSE FROM PROPERTY LINE.
GS = SIDE YARD SETBACK TO GARAGE WALL FROM PROPERTY LINE NEAREST HAMMERHEAD.
Rc = CENTER TURNING RADIUS OF DRIVEWAY. MINIMUM 20 FEET.
Ri = INSIDE TURNING RADIUS OF DRIVEWAY.

CITY OF VICTORVILLE - ENGINEERING DEPARTMENT				
REV.	DATE	BY	**HAMMERHEAD DRIVEWAY TYPE 4**	**GS-05**
	1/5/06	B.W.G.		
1	6/1/07	STAFF	JOHN A. McGLADE, CITY ENGINEER	SHEET 1 OF 2

NOTES:

1. ALL DIMENSIONS ARE MINIMUMS.
2. DIMENSIONS MAY NEED TO BE INCREASED TO ALLOW FOR SLOPES ON THE SIDE YARD OR FRONT YARD, MAXIMUM GRADE OF THE DRIVEWAY, LOT DRAINAGE, PLACEMENT OF FIRE HYDRANTS AND/OR STREETLIGHTS OR OTHER CONDITIONS.
3. ASSUMED WIDTH OF DRIVEWAY AND DRIVEWAY APPROACH FOR A TWO-CAR GARAGE IS 18 FEET. DRIVEWAY WIDTHS AND DIMENSIONS FROM EDGE OF DRIVEWAY TO OUTSIDE SURFACE OF GARAGE WALL WILL VARY.
4. MINIMUM YARD SETBACKS ARE SUBJECT TO CITY REQUIREMENTS INCLUDING THE MUNICIPAL CODE, THE GENERAL PLAN OR THE SPECIFIC PLAN (IF APPLICABLE).
5. FRONT YARD SETBACK TO GARAGE WALL AND HOUSE FROM PROPERTY LINE (GF) AND SIDE YARD SETBACK TO GARAGE WALL FROM PROPERTY LINE NEAREST HAMMERHEAD (GS) AND THE SETBACKS TO THE GARAGE ARE NOT NECESSARILY THE SAME AS THE MINIMUM FRONT YARD AND SIDE YARD SETBACKS REQUIRED.
6. THE FOOTPRINT OF THE HOUSE SHOWN IN THIS STANDARD IS AN EXAMPLE ONLY. FOOTPRINTS WILL VARY BUT MUST MEET SETBACK REQUIREMENTS.
7. THE HAMMERHEAD LAYOUT NEEDS TO BE DESIGNED FOR A SPECIFIC LOT AND INCORPORATED INTO THE PRECISE GRADING PLAN FOR THE LOT.
8. RETAINING WALLS, CURBS AND DRAINAGE SWALES MAY BE REQUIRED TO ACCOMODATE THE DRIVEWAY IMPROVEMENTS ON A LOT. THE PRECISE GRADING PLAN FOR THE LOT MUST SHOW IMPROVEMENTS NECESSARY TO CONSTRUCT THE DRIVEWAY.
9. DRIVEWAY APPROACH SHALL COMPLY WITH CITY OF VICTORVILLE STANDARD DRAWING NO. S-02 WHERE CURB AND GUTTER EXISTS.
10. MAXIMUM DRIVEWAY LONGITUDINAL SLOPE (90 DEGREES TO STREET) IS 12%.
11. MAXIMUM DRIVEWAY CROSS SLOPE (PARALLEL TO STREET) IS 6%.
12. MAXIMUM CHANGE OF SLOPE IN DRIVEWAY GRADE BREAK IS 12%.
13. FOR CONSTRUCTION OF HAMMERHEAD DRIVEWAYS AT EXISTING RESIDENCES, THE CITY ENGINEER MAY GRANT EXCEPTIONS TO THE STANDARDS.

CITY OF VICTORVILLE - ENGINEERING DEPARTMENT				
REV.	DATE	BY	**HAMMERHEAD DRIVEWAY TYPE 4**	**GS-05**
	1/5/06	B.W.G.		
1	6/1/07	STAFF	JOHN A. McGLADE, CITY ENGINEER	SHEET 2 OF 2

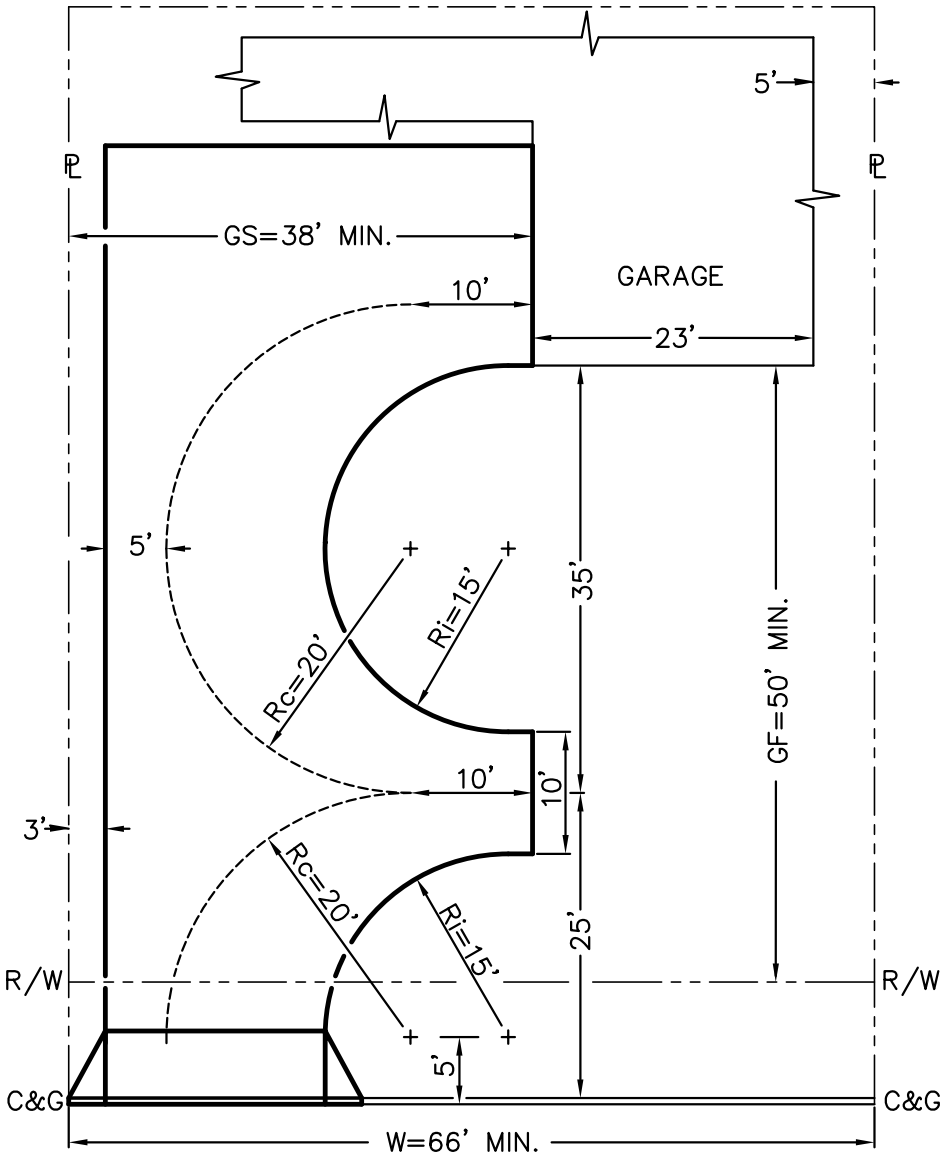

GARAGE FACING SIDE
HAMMERHEAD TO LOT INTERIOR

PLAN

N.T.S.

W	GF	GS	Rc	Ri
66'	50'	38'	20'	15'

TABLE

ABBREVIATIONS

W = LOT WIDTH (AT PROPERTY LINE).
GF = FRONT YARD SETBACK TO GARAGE WALL AND HOUSE FROM PROPERTY LINE.
GS = SIDE YARD SETBACK TO GARAGE WALL FROM PROPERTY LINE NEAREST HAMMERHEAD.
Rc = CENTER TURNING RADIUS OF DRIVEWAY. MINIMUM 20 FEET.
Ri = INSIDE TURNING RADIUS OF DRIVEWAY.

CITY OF VICTORVILLE - ENGINEERING DEPARTMENT				
REV.	DATE	BY	**HAMMERHEAD DRIVEWAY TYPE 5**	**GS-06**
	1/5/06	B.W.G.		
1	6/1/07	STAFF	JOHN A. McGLADE, CITY ENGINEER	SHEET 1 OF 2

NOTES:

1. ALL DIMENSIONS ARE MINIMUMS.
2. DIMENSIONS MAY NEED TO BE INCREASED TO ALLOW FOR SLOPES ON THE SIDE YARD OR FRONT YARD, MAXIMUM GRADE OF THE DRIVEWAY, LOT DRAINAGE, PLACEMENT OF FIRE HYDRANTS AND/OR STREETLIGHTS OR OTHER CONDITIONS.
3. ASSUMED WIDTH OF DRIVEWAY AND DRIVEWAY APPROACH FOR A TWO-CAR GARAGE IS 18 FEET. DRIVEWAY WIDTHS AND DIMENSIONS FROM EDGE OF DRIVEWAY TO OUTSIDE SURFACE OF GARAGE WALL WILL VARY.
4. MINIMUM YARD SETBACKS ARE SUBJECT TO CITY REQUIREMENTS INCLUDING THE MUNICIPAL CODE, THE GENERAL PLAN OR THE SPECIFIC PLAN (IF APPLICABLE).
5. FRONT YARD SETBACK TO GARAGE WALL AND HOUSE FROM PROPERTY LINE (GF) AND SIDE YARD SETBACK TO GARAGE WALL FROM PROPERTY LINE NEAREST HAMMERHEAD (GS) AND THE SETBACKS TO THE GARAGE ARE NOT NECESSARILY THE SAME AS THE MINIMUM FRONT YARD AND SIDE YARD SETBACKS REQUIRED.
6. THE FOOTPRINT OF THE HOUSE SHOWN IN THIS STANDARD IS AN EXAMPLE ONLY. FOOTPRINTS WILL VARY BUT MUST MEET SETBACK REQUIREMENTS.
7. THE HAMMERHEAD LAYOUT NEEDS TO BE DESIGNED FOR A SPECIFIC LOT AND INCORPORATED INTO THE PRECISE GRADING PLAN FOR THE LOT.
8. RETAINING WALLS, CURBS AND DRAINAGE SWALES MAY BE REQUIRED TO ACCOMODATE THE DRIVEWAY IMPROVEMENTS ON A LOT. THE PRECISE GRADING PLAN FOR THE LOT MUST SHOW IMPROVEMENTS NECESSARY TO CONSTRUCT THE DRIVEWAY.
9. DRIVEWAY APPROACH SHALL COMPLY WITH CITY OF VICTORVILLE STANDARD DRAWING NO. S-02 WHERE CURB AND GUTTER EXISTS.
10. MAXIMUM DRIVEWAY LONGITUDINAL SLOPE (90 DEGREES TO STREET) IS 12%.
11. MAXIMUM DRIVEWAY CROSS SLOPE (PARALLEL TO STREET) IS 6%.
12. MAXIMUM CHANGE OF SLOPE IN DRIVEWAY GRADE BREAK IS 12%.
13. FOR CONSTRUCTION OF HAMMERHEAD DRIVEWAYS AT EXISTING RESIDENCES, THE CITY ENGINEER MAY GRANT EXCEPTIONS TO THE STANDARDS.

CITY OF VICTORVILLE - ENGINEERING DEPARTMENT				
REV.	DATE	BY	HAMMERHEAD DRIVEWAY TYPE 5	GS-06
	1/5/06	B.W.G.		
1	6/1/07	STAFF	JOHN A. McGLADE, CITY ENGINEER	SHEET 2 OF 2

CITY OF VICTORVILLE
INCORPORATED SEPT. 21, 1962
HOME OF THE SAN BERNARDINO COUNTY FAIR
CALIFORNIA

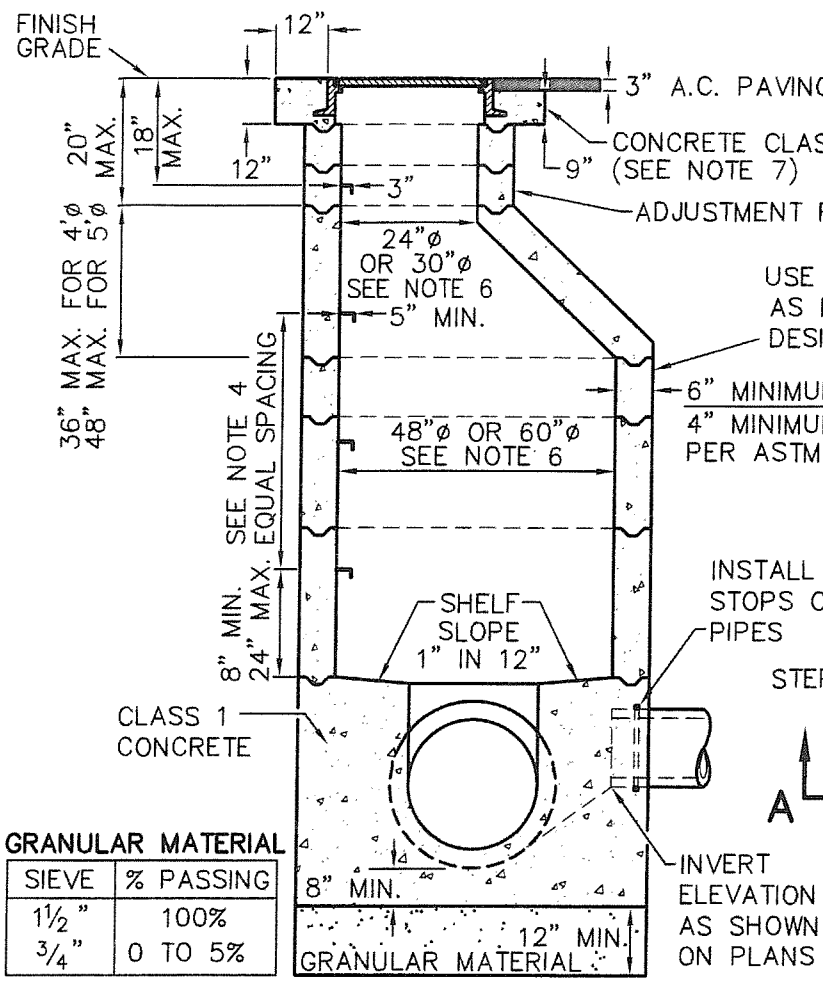

GRANULAR MATERIAL

SIEVE	% PASSING
1½"	100%
¾"	0 TO 5%

GRANULAR MATERIAL ALL MANHOLES IF INVERT IS WITHIN 8" OF GROUNDWATER

SECTION A–A
NOT TO SCALE

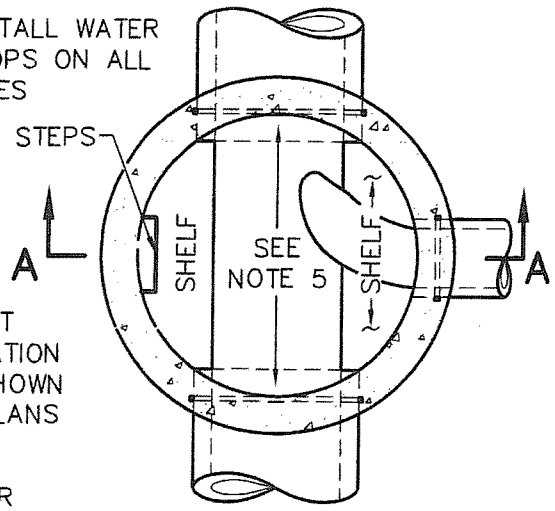

PLAN
NOT TO SCALE

NOTES:

1. ALL SECTIONS TO BE SET IN 1:3 MORTAR TRIMMED SMOOTH INSIDE.
2. CONCRETE FOR MANHOLE SECTIONS SHALL BE 3000 P.S.I. MINIMUM.
3. PROVIDE FLEXIBLE JOINT IN ALL SEWER PIPE OUTSIDE OF MANHOLE BUT WITHIN 12" OF CONCRETE BASE FOR VCP ONLY.
4. MANHOLE STEPS SHALL BE ALHAMBRA FOUNDRY A3320 OR EQUAL. INSTALL AT 12" MINIMUM TO 16" MAXIMUM EQUAL SPACINGS WITH TREAD WIDTH OF 14" MINIMUM.
5. FOR ALL PIPE SIZES THE TOP HALF OF THE PIPE SHALL BE REMOVED TO THE CONTOUR OF THE INSIDE OF THE MANHOLE AND THE BROKEN EDGES SHALL BE TROWELED SMOOTH WITH CEMENT MORTAR PROVIDING A MONOLITHIC BASE.
6. 60" SHAFT DIA. AND 30" DIA. CLEAR OPENING SHALL BE USED FOR MANHOLES WITH A) 18" DIA. OR LARGER, OR B) WHERE 2 OR MORE INLETS EXIST.
7. IN AREAS WHERE MANHOLE IS IN A DIRT EASEMENT, A MINIMUM 12" WIDE BY 12" DEEP PAD OR PRE-CAST FRAME AND LID WILL BE REQUIRED AROUND MANHOLE LID AND FRAME.

APPROVED BY CITY ENGINEER		CITY OF VICTORVILLE - ENGINEERING DEPARTMENT	
		SANITARY SEWER MANHOLE	SS-01
DATE	INITIALS		
05/05/09	JAM	JOHN A. MCGLADE, CITY ENGINEER	SHEET 1 OF 1

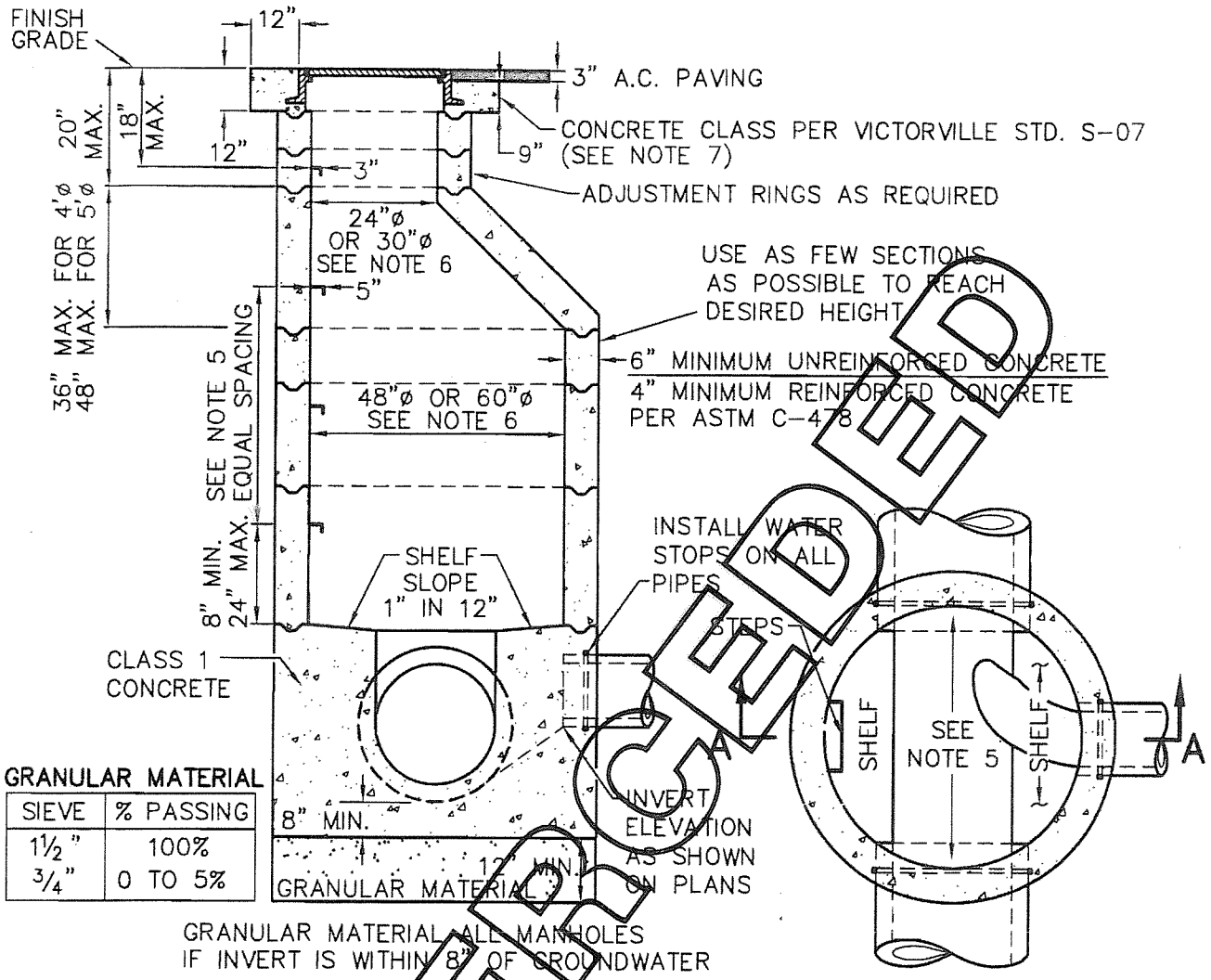

GRANULAR MATERIAL

SIEVE	% PASSING
1½"	100%
¾"	0 TO 5%

SUPERSEDED

NOTES:

1. ALL SECTIONS TO BE SET IN 1:3 MORTAR TRIMMED SMOOTH INSIDE.
2. CONCRETE FOR MANHOLE SECTIONS SHALL BE 3000 P.S.I. MINIMUM.
3. PROVIDE FLEXIBLE JOINT IN ALL SEWER PIPE OUTSIDE OF MANHOLE BUT WITHIN 12" OF CONCRETE BASE.
4. MANHOLE STEPS SHALL BE ALHAMBRA FOUNDRY A3320 OR EQUAL. INSTALL AT 12" MINIMUM TO 16" MAXIMUM EQUAL SPACINGS.
5. FOR ALL PIPE SIZES THE TOP HALF OF THE PIPE SHALL BE REMOVED TO THE CONTOUR OF THE INSIDE OF THE MANHOLE AND THE BROKEN EDGES SHALL BE TROWELED SMOOTH WITH CEMENT MORTAR PROVIDING A MONOLITHIC BASE.
6. 60" SHAFT DIA. AND 30" DIA. CLEAR OPENING SHALL BE USED FOR MANHOLES WITH A) 18" DIA. OR LARGER, OR B) WHERE 2 OR MORE INLETS EXIST.
7. IN AREAS WHERE MANHOLE IS IN A DIRT EASEMENT, A MINIMUM 12" WIDE BY 12" DEEP PAD OR PRE-CAST FRAME AND LID WILL BE REQUIRED AROUND MANHOLE LID AND FRAME.

APPROVED BY CITY ENGINEER		CITY OF VICTORVILLE - ENGINEERING DEPARTMENT	
		SANITARY SEWER MANHOLE	SS-01
DATE	INITIALS		
12/1/08	J. Wells	JOHN A. MCGLADE, CITY ENGINEER	SHEET 1 OF 1

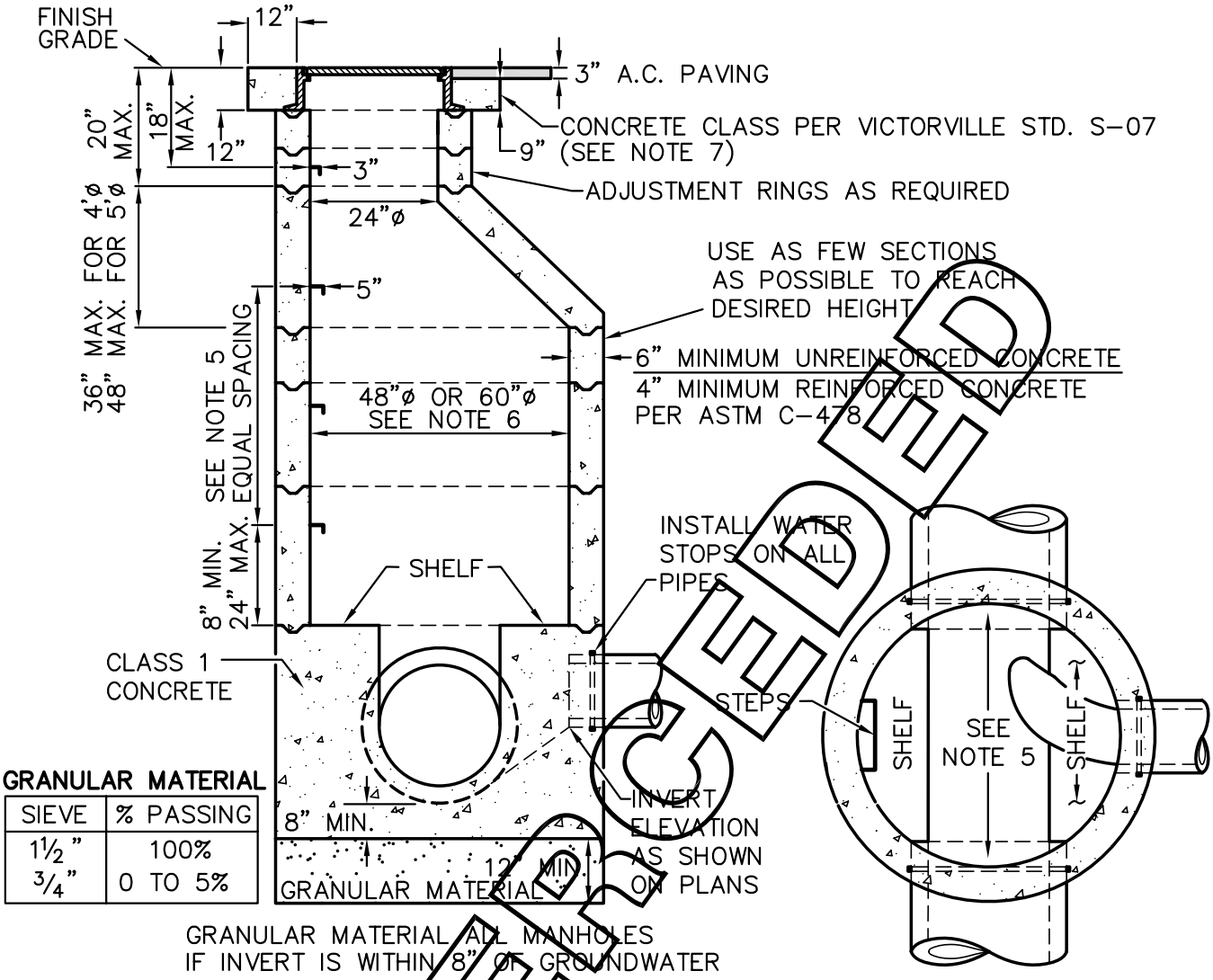

GRANULAR MATERIAL

SIEVE	% PASSING
1½"	100%
¾"	0 TO 5%

SUPERSEDED

NOTES:

1. ALL SECTIONS TO BE SET IN 1:3 MORTAR TRIMMED SMOOTH INSIDE.
2. CONCRETE FOR MANHOLE SECTIONS SHALL BE 3000 P.S.I. MINIMUM.
3. PROVIDE FLEXIBLE JOINT IN ALL SEWER PIPE OUTSIDE OF MANHOLE BUT WITHIN 12" OF CONCRETE BASE.
4. MANHOLE STEPS SHALL BE ALHAMBRA FOUNDRY A3320 OR EQUAL. INSTALL AT 12" MINIMUM TO 16" MAXIMUM EQUAL SPACINGS.
5. FOR ALL PIPE SIZES THE TOP HALF OF THE PIPE SHALL BE REMOVED TO THE CONTOUR OF THE INSIDE OF THE MANHOLE AND THE BROKEN EDGES SHALL BE TROWELED SMOOTH WITH CEMENT MORTAR PROVIDING A MONOLITHIC BASE.
6. 60" SHAFT DIAMETER SHALL BE USED FOR MANHOLES WITH A) 18"ø OR LARGER OR B) WHERE 2 OR MORE INLETS EXIST.
7. IN AREAS WHERE MANHOLE IS IN A DIRT EASEMENT, A MINIMUM 12" WIDE BY 12" DEEP PAD OR PRE-CAST FRAME AND LID WILL BE REQUIRED AROUND MANHOLE LID AND FRAME.

REV.	DATE	BY		
			CITY OF VICTORVILLE - ENGINEERING DEPARTMENT	
	11/5/75	T.D.W.	**SANITARY SEWER MANHOLE**	**SS-01**
1	3/12/93	D.G.H.		
2	7/25/07	STAFF	JOHN A. MCGLADE, CITY ENGINEER	SHEET 1 OF 1

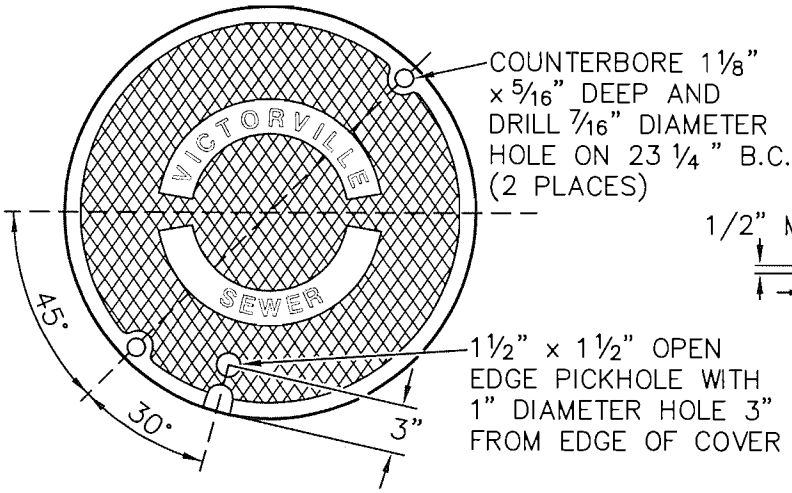

PLATEN COVER TOP VIEW

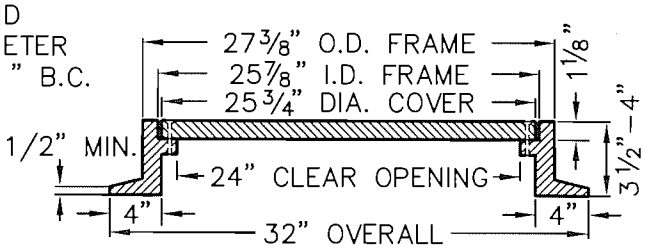

SECTION A–A

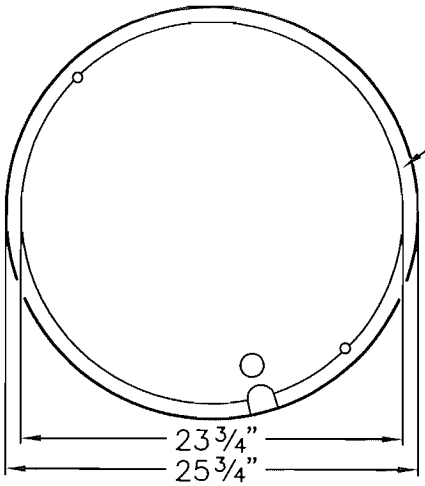

PLATEN COVER BOTTOM VIEW

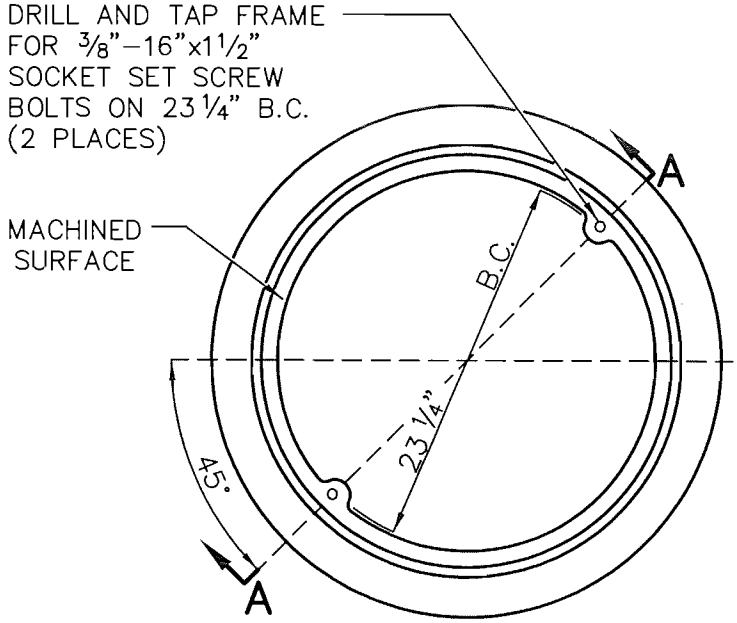

PLAN OF FRAME

NOTES:

1. MANHOLE FRAME AND COVER TO BE MANUFACTURED FROM CLASS 35 CAST IRON PER ASTM A–48.
2. FRAME AND COVER SHALL BE CAPABLE OF SUPPORTING H–20 WHEEL LOADING.
3. COVER SHALL HAVE CAST INTO TOP IN 1" HIGH MINIMUM BLOCK LETTERS "VICTORVILLE" OR "CITY OF VICTORVILLE" AND "SEWER". MANUFACTURER'S NAME OR INSIGNIA SHALL BE CAST INTO BOTH FRAME AND COVER.
4. MACHINE MATING SURFACES OF FRAME AND COVER TO PROVIDE UNIFORM EDGE SUPPORT FOR COVER.
5. PAINT FRAME AND COVER WITH BLACK BITUMINOUS PAINT.
6. APPROVED SUPPLIERS: ALHAMBRA FOUNDRY #1254, NEENAH FOUNDRY #R–1593 AND SOUTH BAY FOUNDRY #SBF1253B.

APPROVED BY CITY ENGINEER		CITY OF VICTORVILLE - ENGINEERING DEPARTMENT	
DATE	INITIALS	SANITARY SEWER 24" MANHOLE FRAME AND COVER	SS-02
12/1/08	J. McGlade	JOHN A. McGLADE, CITY ENGINEER	SHEET 1 OF 1

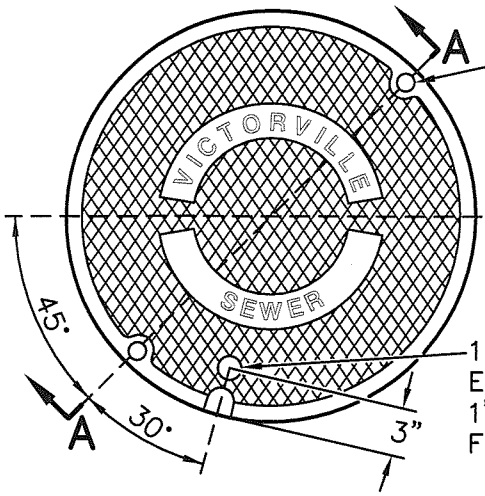

PLATEN COVER TOP VIEW

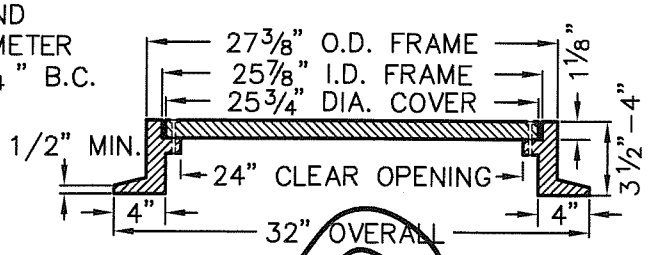

SECTION A-A

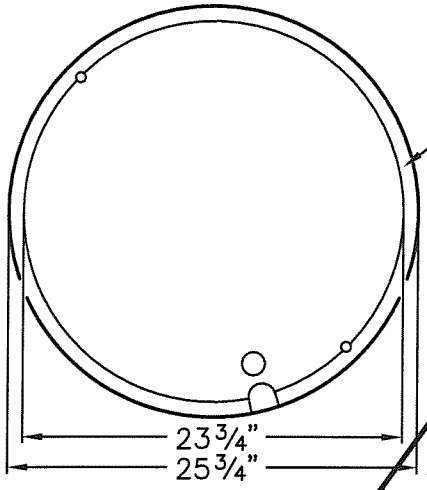

PLATEN COVER BOTTOM VIEW

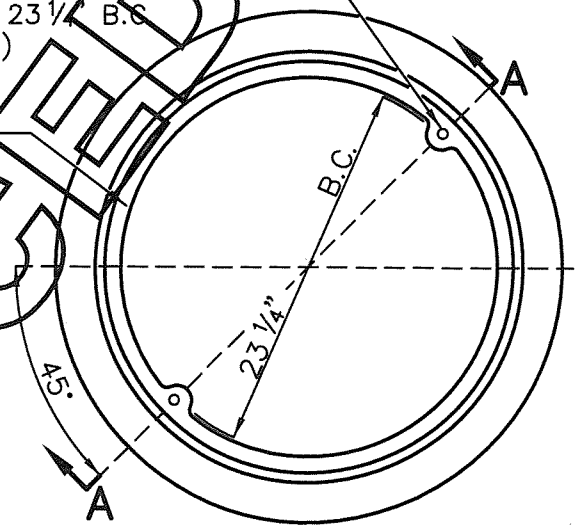

PLAN OF FRAME

SUPERCEDED

NOTES:

1. MANHOLE FRAME AND COVER TO BE MANUFACTURED FROM CLASS 35 CAST IRON PER ASTM A-48.
2. FRAME AND COVER SHALL BE CAPABLE OF SUPPORTING H-20 WHEEL LOADING.
3. COVER SHALL HAVE CAST INTO TOP IN 1" HIGH MINIMUM BLOCK LETTERS "VICTORVILLE" OR "CITY OF VICTORVILLE" AND "SEWER". MANUFACTURER'S NAME OR INSIGNIA SHALL BE CAST INTO BOTH FRAME AND COVER.
4. MACHINE MATING SURFACES OF FRAME AND COVER TO PROVIDE UNIFORM EDGE SUPPORT FOR COVER.
5. PAINT FRAME AND COVER WITH BLACK BITUMINOUS PAINT.
6. APPROVED SUPPLIERS: ALHAMBRA FOUNDRY #1254, NEENAH FOUNDRY #R-1593 AND SOUTH BAY FOUNDRY #SBF1253B.

CITY OF VICTORVILLE - ENGINEERING DEPARTMENT				
REV.	DATE	BY	SANITARY SEWER MANHOLE FRAME AND COVER	SS-02
	5/18/93	D.G.H.		
1	6/1/07	STAFF	JOHN A. McGLADE, CITY ENGINEER	SHEET 1 OF 1

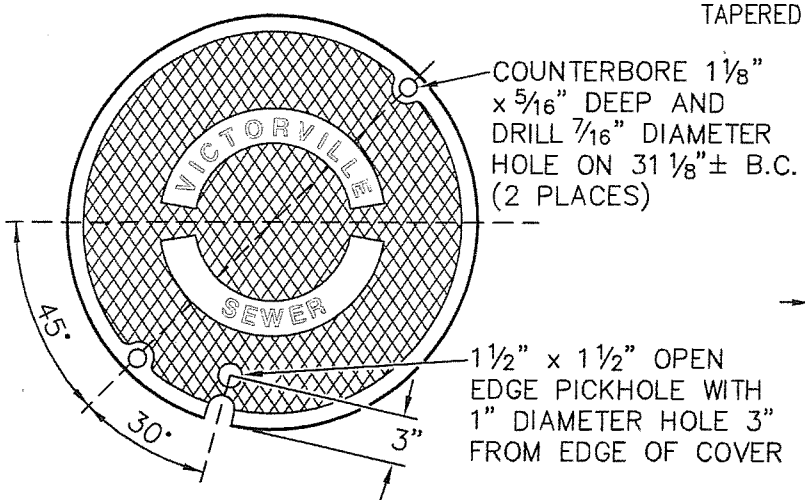

PLATEN COVER TOP VIEW

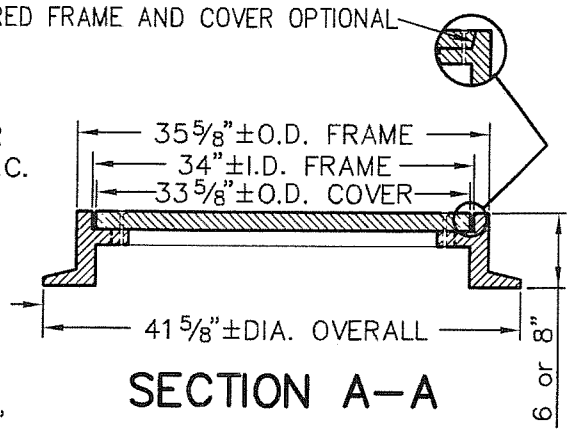

SECTION A–A

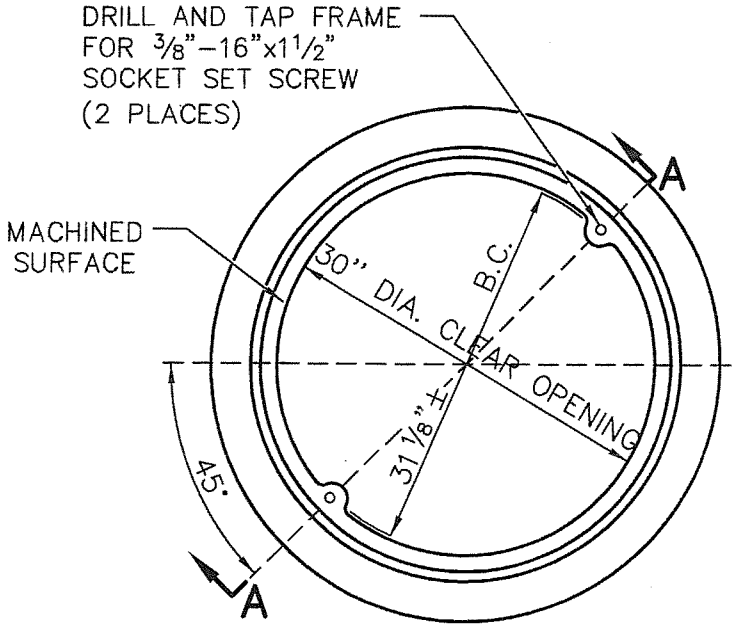

PLAN OF FRAME

NOTES:

1. MANHOLE FRAME AND COVER TO BE MANUFACTURED FROM CLASS 35 CAST IRON PER ASTM A–48.
2. FRAME AND COVER SHALL BE CAPABLE OF SUPPORTING H–20 WHEEL LOADING.
3. COVER SHALL HAVE CAST INTO TOP IN 1" HIGH MINIMUM BLOCK LETTERS "VICTORVILLE" OR "CITY OF VICTORVILLE" AND "SEWER". MANUFACTURER'S NAME OR INSIGNIA SHALL BE CAST INTO BOTH FRAME AND COVER.
4. MACHINE MATING SURFACES OF FRAME AND COVER TO PROVIDE UNIFORM EDGE SUPPORT FOR COVER.
5. PAINT FRAME AND COVER WITH BLACK BITUMINOUS PAINT.
6. APPROVED SUPPLIERS: ALHAMBRA FOUNDRY, NEENAH FOUNDRY AND SOUTH BAY FOUNDRY.

APPROVED BY CITY ENGINEER			
DATE	INITIALS	**SANITARY SEWER 30" MANHOLE FRAME AND COVER**	**SS-02A**
04/30/09	JAMcG	JOHN A. McGLADE, CITY ENGINEER	SHEET 1 OF 1

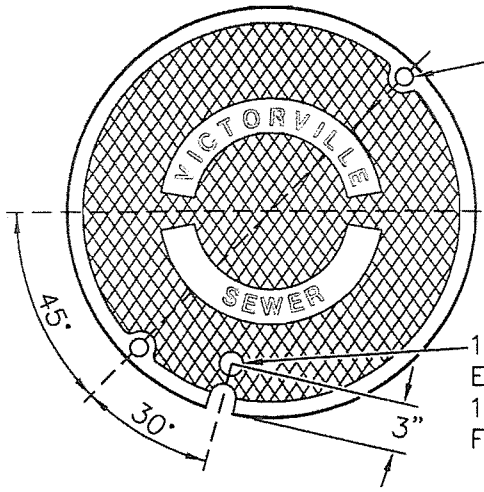

COUNTERBORE 1 1/8" x 5/16" DEEP AND DRILL 7/16" DIAMETER HOLE ON 31 1/8" B.C. (2 PLACES)

1 1/2" x 1 1/2" OPEN EDGE PICKHOLE WITH 1" DIAMETER HOLE 3" FROM EDGE OF COVER

PLATEN COVER TOP VIEW

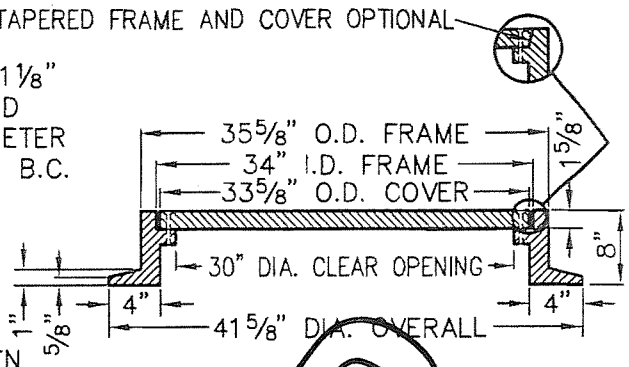

SECTION A-A

DRILL AND TAP FRAME FOR 3/8"-16"x1 1/2" SOCKET SET SCREW BOLTS ON 31 1/8" B.C. (2 PLACES)

MACHINED SURFACE

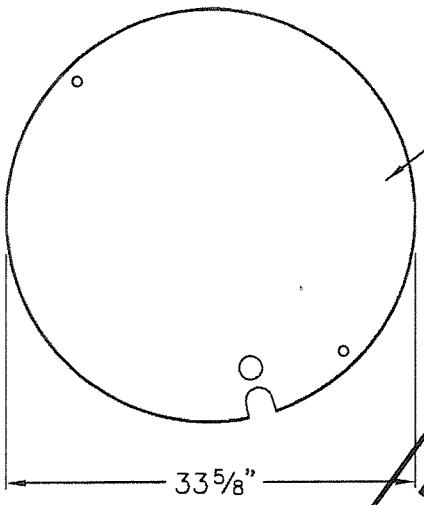

PLATEN COVER BOTTOM VIEW

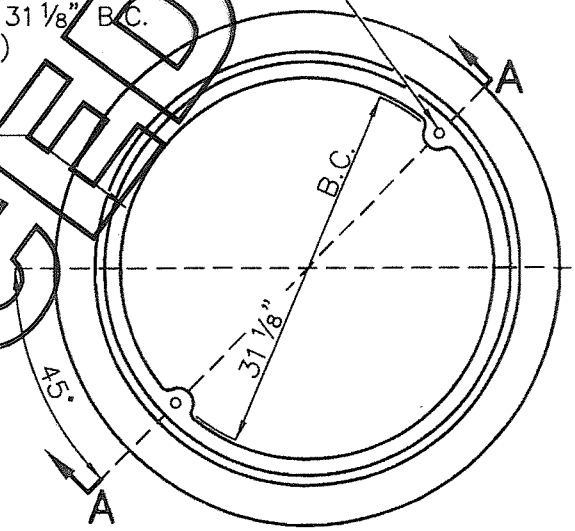

PLAN OF FRAME

SUPERCEDED

NOTES:

1. MANHOLE FRAME AND COVER TO BE MANUFACTURED FROM CLASS 35 CAST IRON PER ASTM A-48.
2. FRAME AND COVER SHALL BE CAPABLE OF SUPPORTING H-20 WHEEL LOADING.
3. COVER SHALL HAVE CAST INTO TOP IN 1" HIGH MINIMUM BLOCK LETTERS "VICTORVILLE" OR "CITY OF VICTORVILLE" AND "SEWER". MANUFACTURER'S NAME OR INSIGNIA SHALL BE CAST INTO BOTH FRAME AND COVER.
4. MACHINE MATING SURFACES OF FRAME AND COVER TO PROVIDE UNIFORM EDGE SUPPORT FOR COVER.
5. PAINT FRAME AND COVER WITH BLACK BITUMINOUS PAINT.
6. APPROVED SUPPLIERS: ALHAMBRA FOUNDRY #1254, NEENAH FOUNDRY #R-1593 AND SOUTH BAY FOUNDRY #SBF1253B.

APPROVED BY			
CITY ENGINEER		SANITARY SEWER 30" MANHOLE FRAME AND COVER	SS-02A
DATE	INITIALS		
12/1/08	J McGlade	JOHN A. McGLADE, CITY ENGINEER	SHEET 1 OF 1

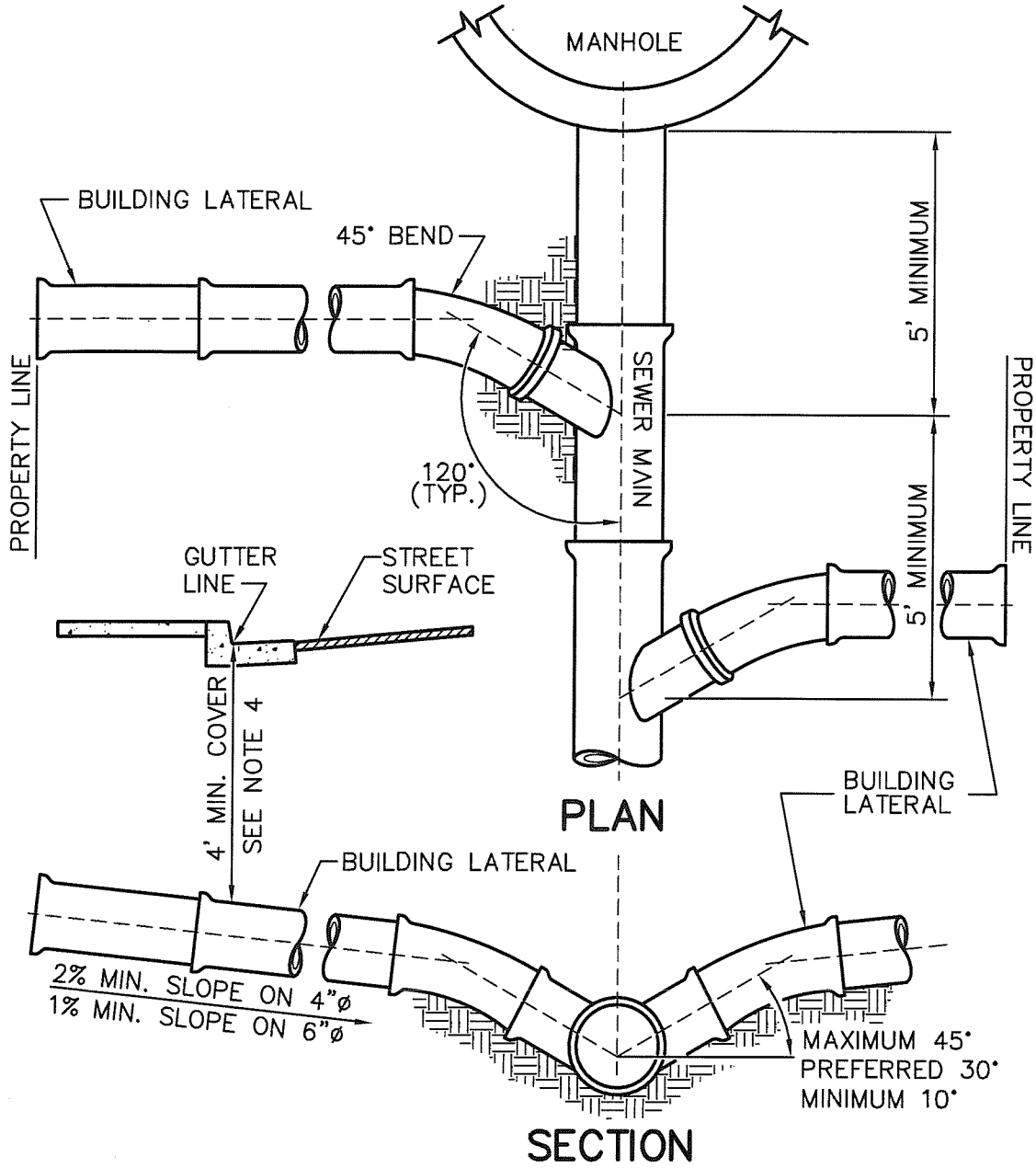

NOTES:

1. USE FACTORY MADE WYES, FITTINGS AND SEWER LATERAL PIPE OF THE SAME MATERIAL AS THE MAIN LINE SEWER FOR NEW INSTALLATIONS OR USE COMPATIBLE WYES AND FITTINGS TO JOIN LATERALS AND MAIN LINE SEWERS OF DIFFERENT MATERIALS.
2. SEWER LATERALS ON EXISTING MAIN LINE SEWER SHALL USE SEWER SADDLES PER CITY STANDARD DRAWING SS-09.
3. PIPE BEDDING FOR LATERALS SHALL CONFORM TO STANDARD DRAWINC SS-05.
4. COVER MAY BE REDUCED TO 3' IF CONCRETE ENCASED OR SPECIAL PIPE APPROVED BY THE ENGINEER IS USED.

REV.	DATE	BY		
CITY GF VICTORVILLE - ENGINEERING DEPARTMENT				
	1/23/67		**SEWER LATERALS**	**SS-03**
1	3/22/93	D.G.H.		
2	6/1/07	STAFF	JOHN A. MCGLADE, CITY ENGINEER	SHEET 1 OF 1

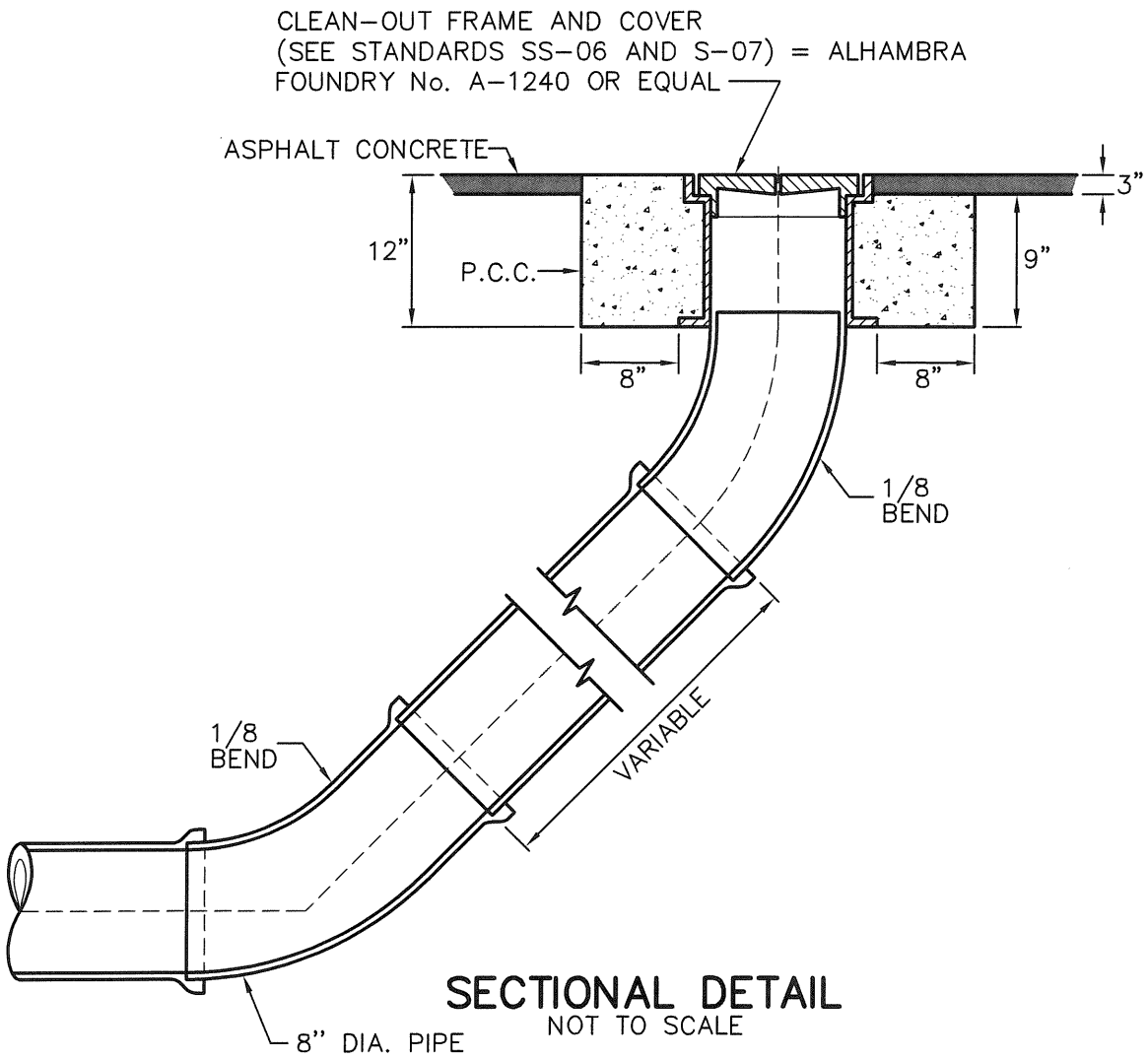

SECTIONAL DETAIL

NOT TO SCALE

NOTES:

1. NO CLEAN-OUT SHALL BE PLACED IN FRONT OF DRIVEWAYS EXCEPT ON CUL-DE-SACS.
2. CONCRETE SHALL CONTAIN NOT LESS THAN 550 POUNDS OF CEMENTITIOUS MATERIAL PER CUBIC YARD WITH 4% AIR ENTRAINMENT.
3. FINISH GRADE STAKE SHALL BE SET AT EACH CLEAN-OUT TO CONFIRM MAXIMUM DEPTH OF 1/8 BEND IS NOT EXCEEDED.

APPROVED BY CITY ENGINEER		CITY OF VICTORVILLE - ENGINEERING DEPARTMENT	
		SEWER CLEAN-OUT	SS-04
DATE	INITIALS		
05/05/09	JAMcG	JOHN A. MCGLADE, CITY ENGINEER	SHEET 1 OF 1

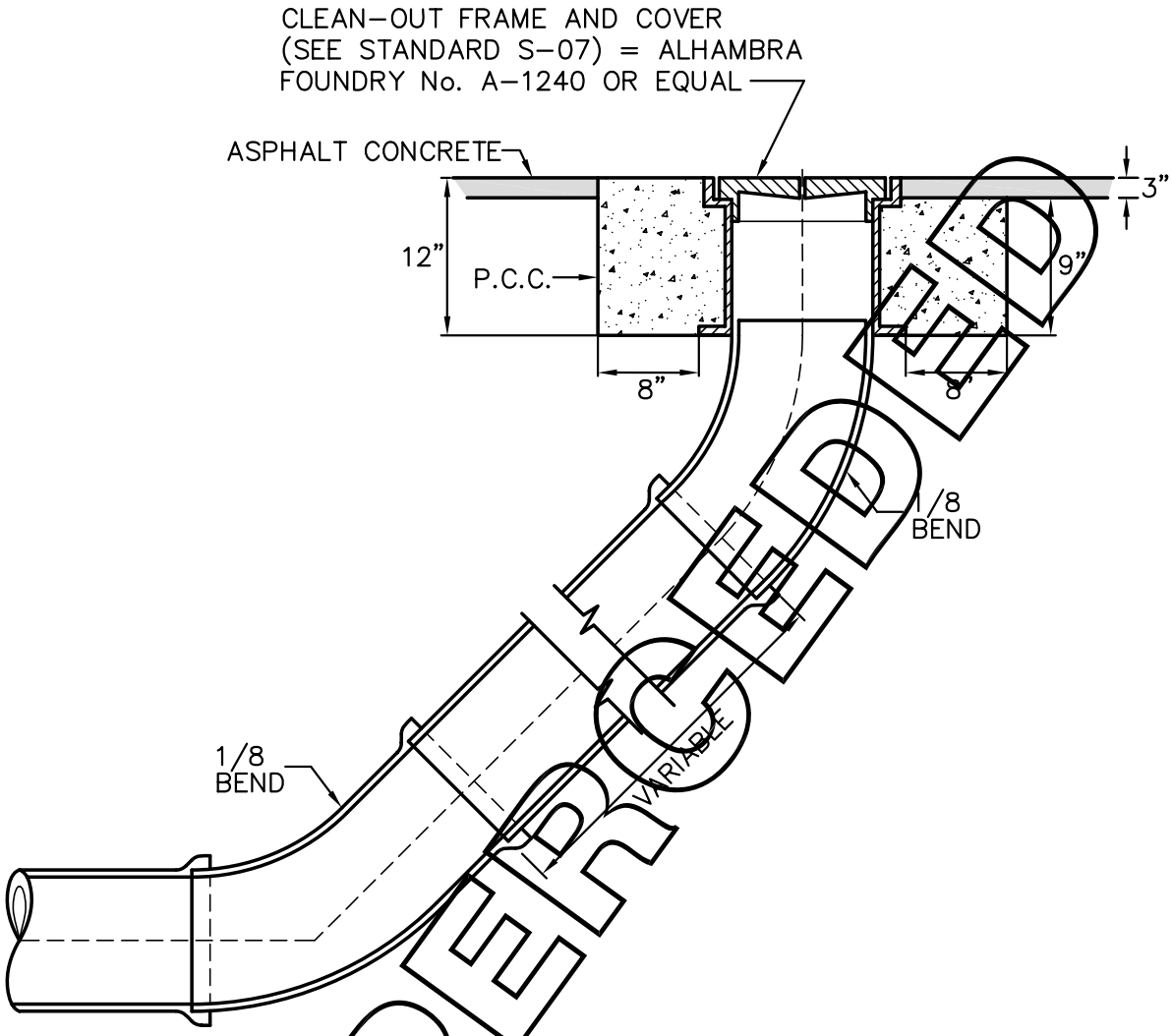

SUPERSEDED

NOTES:

1. NO CLEAN-OUT SHALL BE PLACED IN FRONT OF DRIVEWAYS EXCEPT ON CUL-DE-SACS.
2. CONCRETE SHALL CONTAIN NOT LESS THAN 550 POUNDS OF CEMENTITIOUS MATERIAL PER CUBIC YARD WITH 4% AIR ENTRAINMENT.
3. FINISH GRADE STAKE SHALL BE SET AT EACH CLEAN-OUT TO CONFIRM MAXIMUM DEPTH OF 1/8 BEND IS NOT EXCEEDED.

REV.	DATE	BY		
CITY OF VICTORVILLE - ENGINEERING DEPARTMENT				
	1/23/67	PATTERSON	**SEWER CLEAN-OUT**	**SS-04**
1	3/22/93	D.G.H.		
2	7/25/07	STAFF	JOHN A. MCGLADE, CITY ENGINEER	SHEET 1 OF 1

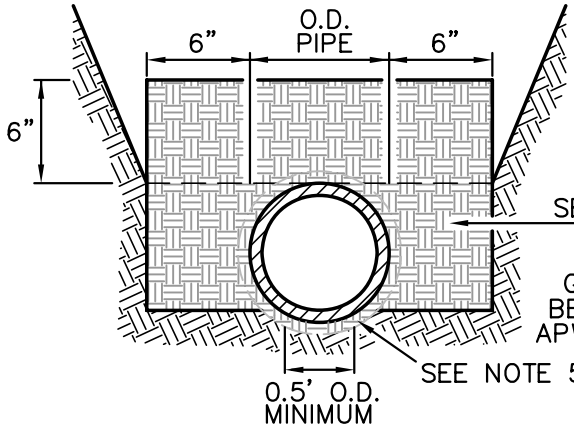

NORMAL BEDDING

LINEAR FEET = 1.5

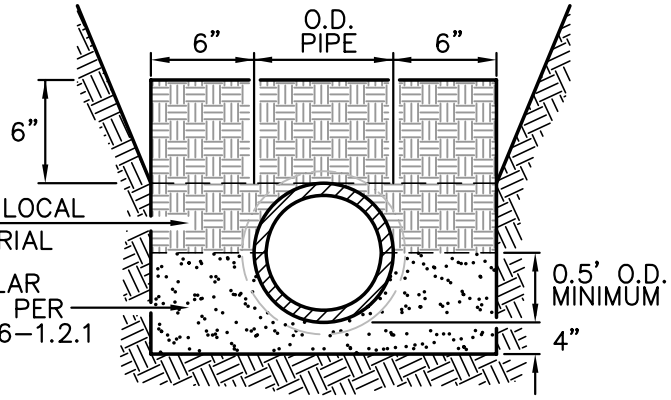

GRANULAR BEDDING

LINEAR FEET = 1.9

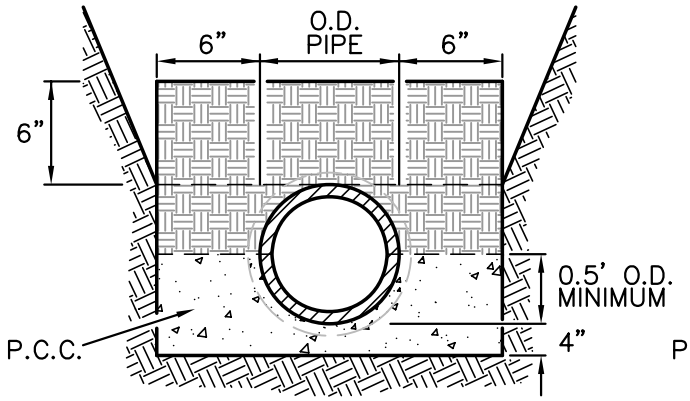

CONCRETE CRADLE

LINEAR FEET = 3.0

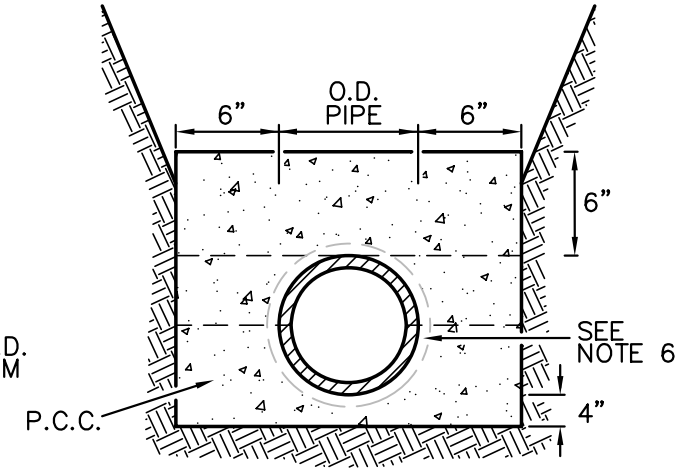

CONCRETE ENCASEMENT

LINEAR FEET = 4.5

NOTES:

1. WIDTH OF TRENCH AT TOP OF PIPE SHALL BE 21" MINIMUM.
2. CONCRETE SHALL BE MINOR CONCRETE PER SECTION 90 OF STANDARD SPECIFICATIONS.
3. BEDDING SHALL BE PLACED IN 6" LAYERS AND MECHANICALLY COMPACTED TO A HEIGHT OF 6" ABOVE THE TOP OF THE PIPE.
4. TRENCH EXCAVATION AND BACKFILL SHALL BE IN ACCORDANCE WITH SECTION 306.1 OF THE STANDARD SPECIFICATIONS FOR PUBLIC WORKS CONSTRUCTION AND CITY STANDARD DRAWING S-10.
5. HAND SHAPED BOTTOM EITHER IN UNDISTURBED SOIL OR IN APPROVED GRANULAR MATERIAL AT LEAST 1" BELOW BELL OR COLLAR.
6. PLACE ONE LAYER OF 15# BUILDING PAPER AS BOND BREAKER AROUND PIPE AND COUPLINGS.

REV.	DATE	BY		
CITY OF VICTORVILLE - ENGINEERING DEPARTMENT				
	1/24/67	R.S.	CLAY SEWER PIPE BEDDING	SS-05
1	3/23/93	D.G.H.		
2	6/1/07	STAFF	JOHN A. McGLADE, CITY ENGINEER	SHEET 1 OF 2

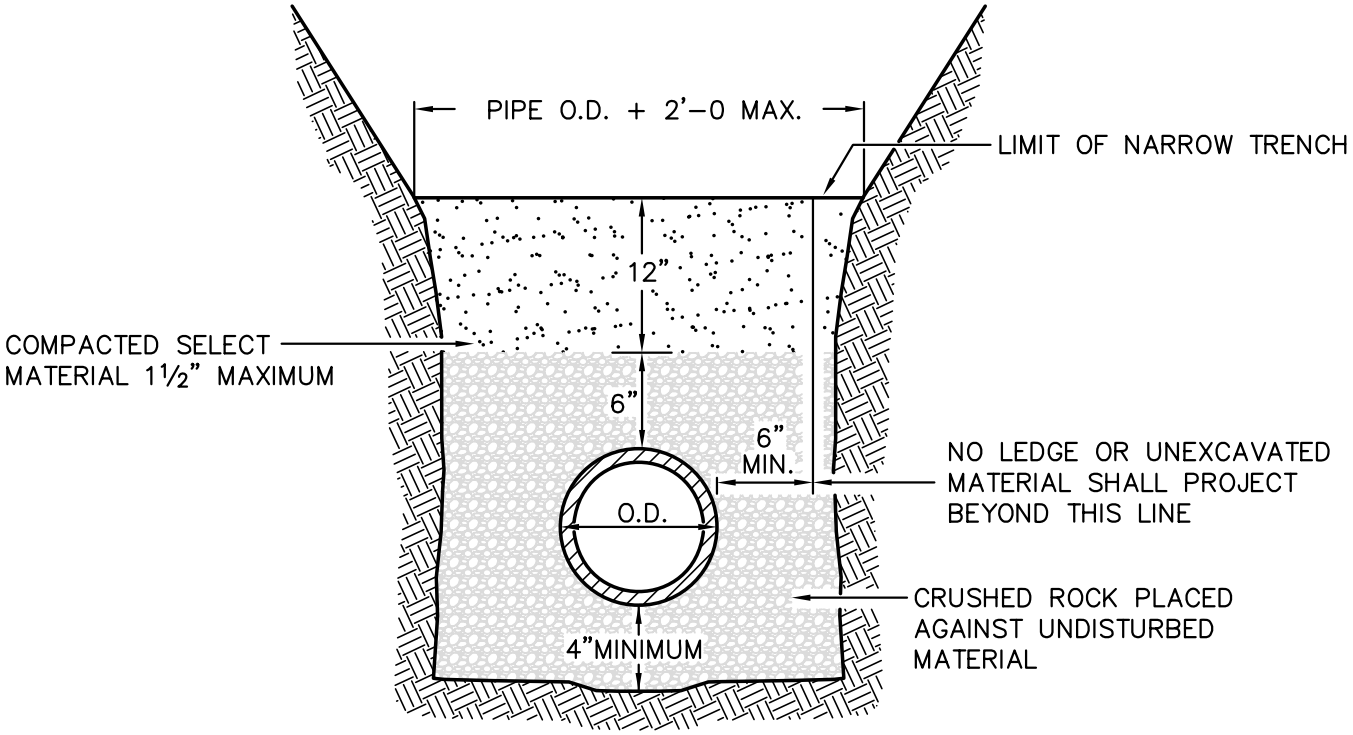

PVC PIPE BEDDING

NOT TO SCALE

NOTES:

1. P.V.C. PIPE SHALL CONFORM TO THE REQUIREMENTS OF ASTM D-2680, D-3034 AND F-679 WITH AN SDR VALUE NOT MORE THAN 35 OR F-949.
2. BEDDING SHALL BE PLACED IN 6" LAYERS AND MECHANICALLY COMPACTED TO 12" ABOVE PIPE.
3. TRENCH EXCAVATION AND BACKFILL SHALL BE PER SECTION 306.1 OF THE STANDARD SPECIFICATIONS FOR PUBLIC WORKS CONSTRUCTION AND CITY STANDARD DRAWING S-10.
4. THE CRUSHED ROCK BEDDING SHALL CONFORM TO THE REQUIREMENTS OF THE STANDARD SPECIFICATIONS FOR PUBLIC WORKS CONSTRUCTION 306-1.2.13.

REV.	DATE	BY		
CITY OF VICTORVILLE - ENGINEERING DEPARTMENT				
	7/28/89	R.S.	PVC SEWER PIPE BEDDING	SS-05
1	3/23/93	D.G.H.		
2	6/1/07	STAFF	JOHN A. McGLADE, CITY ENGINEER	SHEET 2 OF 2

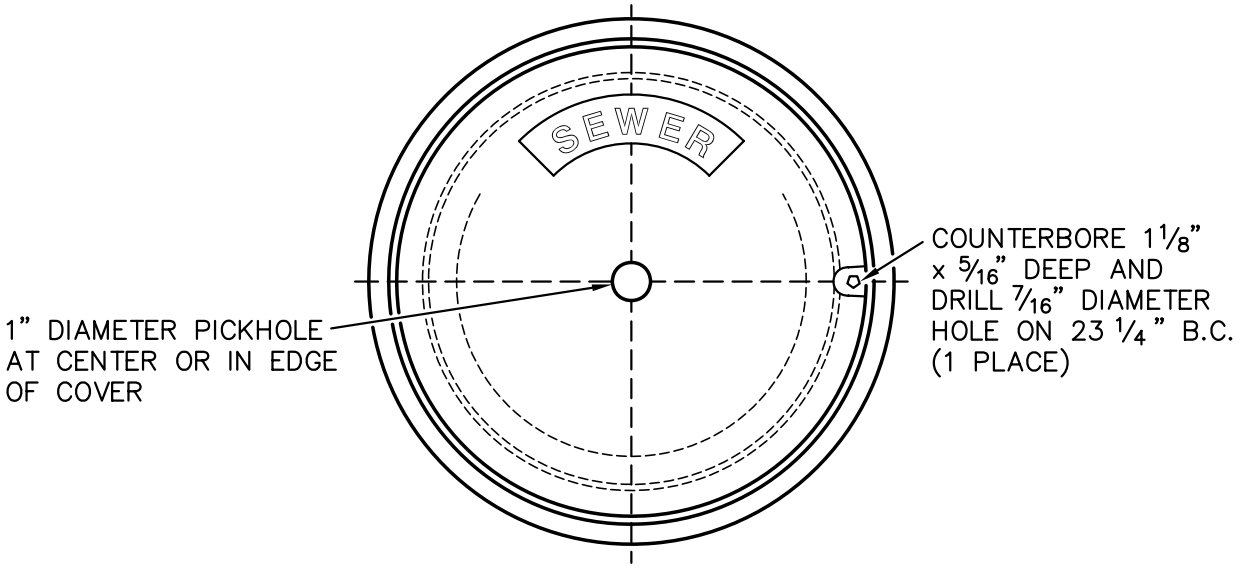

PLAN OF FRAME

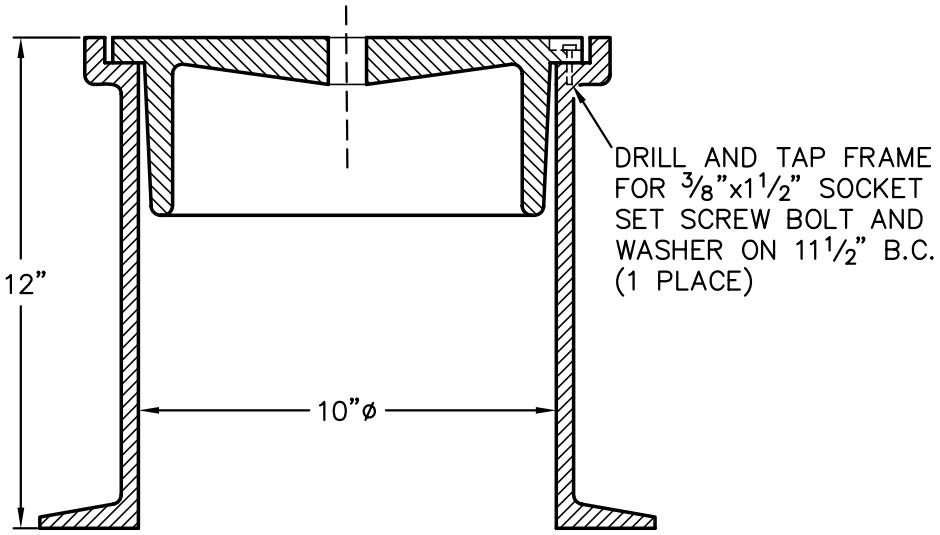

SECTION THROUGH FRAME AND COVER

NOTES:

1. MANHOLE FRAME AND COVER TO BE MANUFACTURED FROM CLASS 35 CAST IRON PER ASTM A–48.
2. FRAME AND COVER SHALL BE CAPABLE OF SUPPORTING H–20 WHEEL LOADING.
3. COVER SHALL HAVE CAST INTO TOP IN 1" HIGH MINIMUM BLOCK LETTERS "SEWER", MANUFACTURER'S NAME OR INSIGNIA SHALL BE CAST INTO BOTH FRAME AND COVER.
4. PAINT FRAME AND COVER WITH BLACK BITUMINOUS PAINT.
5. APPROVED SUPPLIERS: ALHAMBRA FOUNDRY A–1240.

CITY OF VICTORVILLE - ENGINEERING DEPARTMENT				
REV.	DATE	BY	CLEAN-OUT FRAME AND COVER	SS-06
	5/18/93	D.G.H.		
1	6/1/07	STAFF	JOHN A. McGLADE, CITY ENGINEER	SHEET 1 OF 1

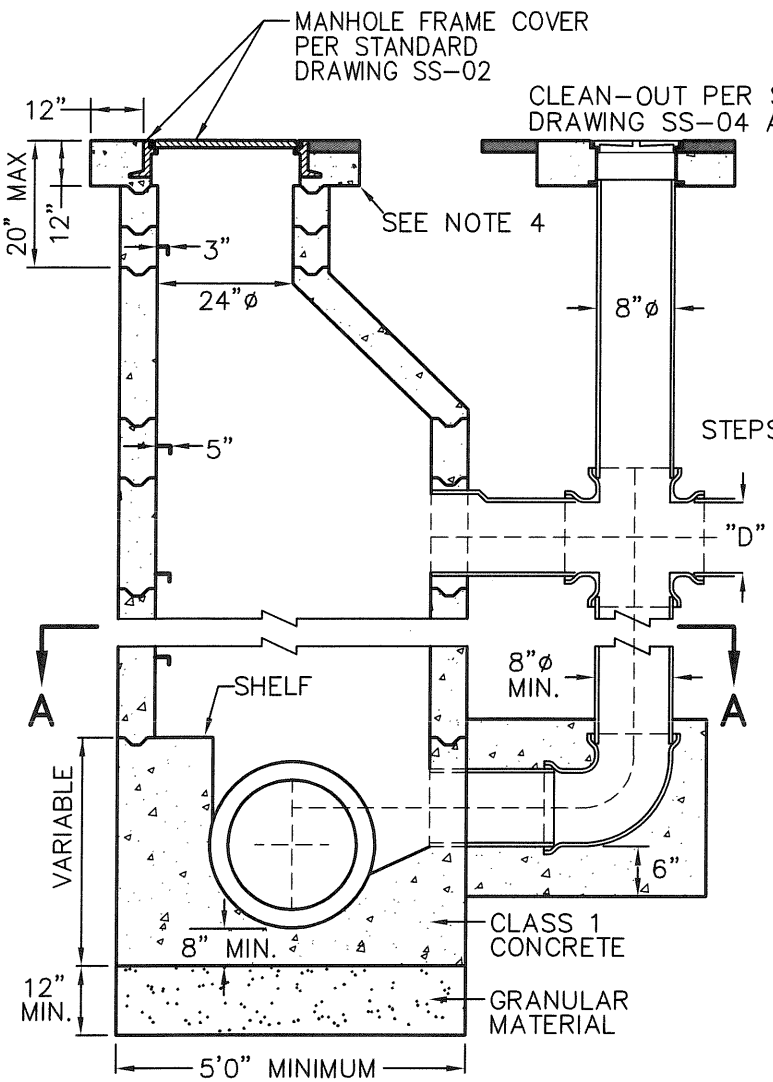

SANITARY SEWER MANHOLE
PER STANDARD DRAWING SS-01

SECTIONAL VIEW

NOT TO SCALE

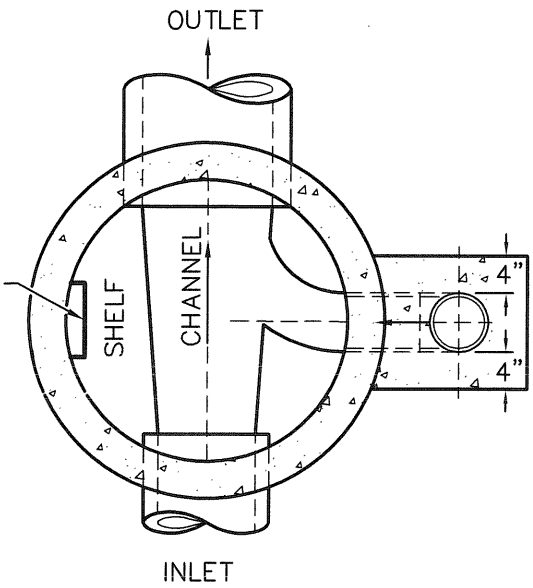

SECTION A–A

NOT TO SCALE

NOTES:

1. WHEN PIPE IS LAID THROUGH THE MANHOLE, THE TOP HALF OF THE PIPE SHALL BE REMOVED TO THE CONTOUR OF THE INSIDE OF THE MANHOLE AND THE BROKEN EDGE SHALL BE PLASTERED SMOOTH WITH CEMENT MORTAR.
2. CONCRETE SHALL BE CLASS 1 PER SECTION 90 OF STANDARD SPECIFICATIONS.
3. PROVIDE FLEXIBLE JOINT IN MANHOLE WALL OR WITHIN 12" OF OUTSIDE FACE FOR VCP ONLY.
4. IN AREAS WHERE MANHOLE IS IN A DIRT EASEMENT, A MINIMUM 12" WIDE BY 12" DEEP PAD OR PRE-CAST FRAME AND LID WILL BE REQUIRED AROUND MANHOLE LID AND FRAME.

APPROVED BY CITY ENGINEER		CITY OF VICTORVILLE - ENGINEERING DEPARTMENT	
		SANITARY SEWER DROP MANHOLE	SS-07
DATE	INITIALS		
05/05/09	JAM	JOHN A. MCGLADE, CITY ENGINEER	SHEET 1 OF 1

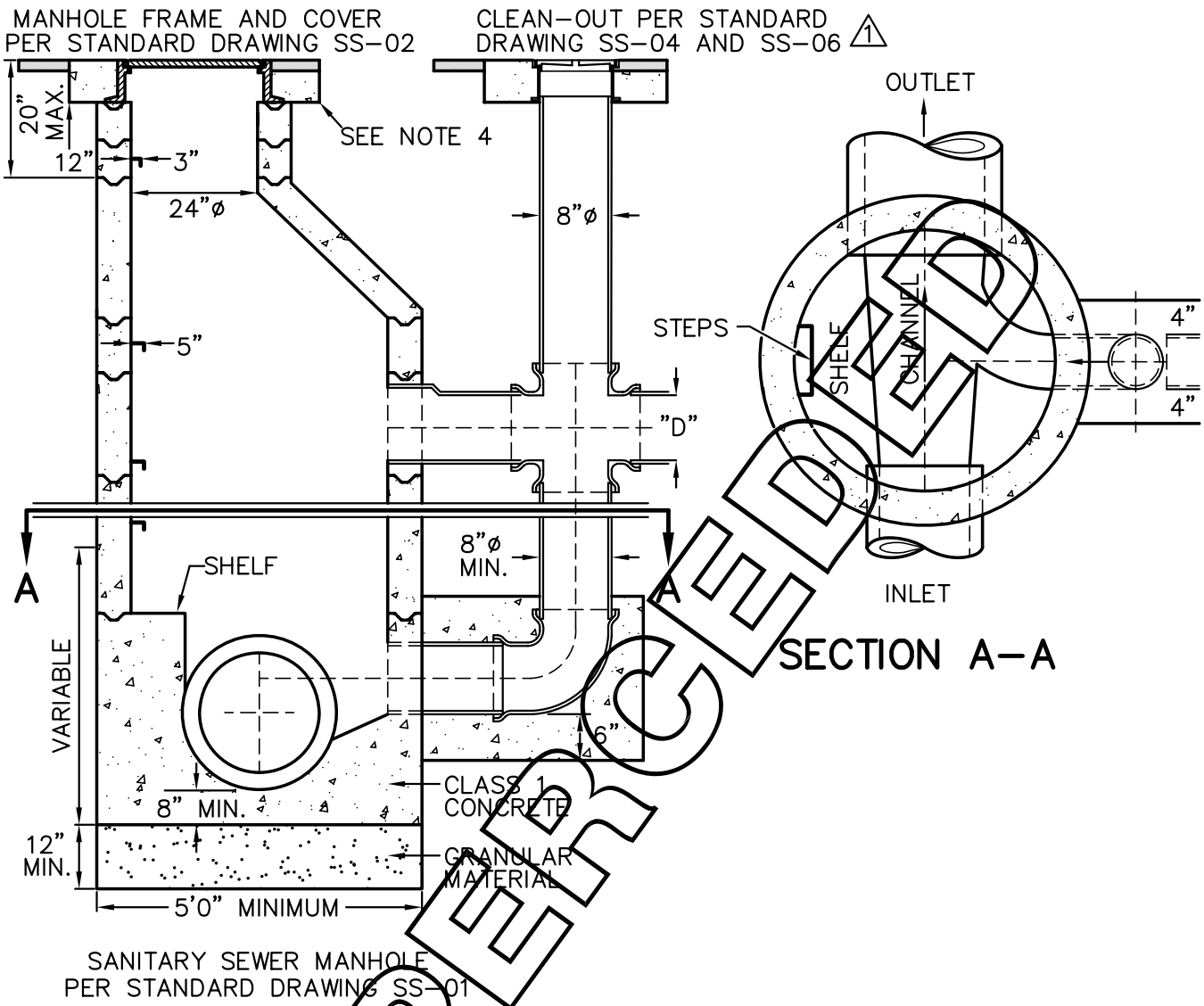

SUPERCEDED

NOTES:

1. WHEN PIPE IS LAID THROUGH THE MANHOLE, THE TOP HALF OF THE PIPE SHALL BE REMOVED TO THE CONTOUR OF THE INSIDE OF THE MANHOLE AND THE BROKEN EDGE SHALL BE PLASTERED SMOOTH WITH CEMENT MORTAR.
2. CONCRETE SHALL BE CLASS 1 PER SECTION 90 OF STANDARD SPECIFICATIONS.
3. PROVIDE FLEXIBLE JOINT IN MANHOLE WALL OR WITHIN 2'0" OF OUTSIDE FACE FOR VCP ONLY.
4. IN AREAS WHERE MANHOLE IS IN A DIRT EASEMENT, A MINIMUM 12" WIDE BY 12" DEEP PAD OR PRE-CAST FRAME AND LID WILL BE REQUIRED AROUND MANHOLE LID AND FRAME.

REV.	DATE	BY		
CITY OF VICTORVILLE - ENGINEERING DEPARTMENT				
1/20/94	BLOMQUIST		SANITARY SEWER DROP MANHOLE	SS-07
1	4/26/99	H.A.A.		
2	7/25/07	STAFF	JOHN A. MCGLADE, CITY ENGINEER	SHEET 1 OF 1

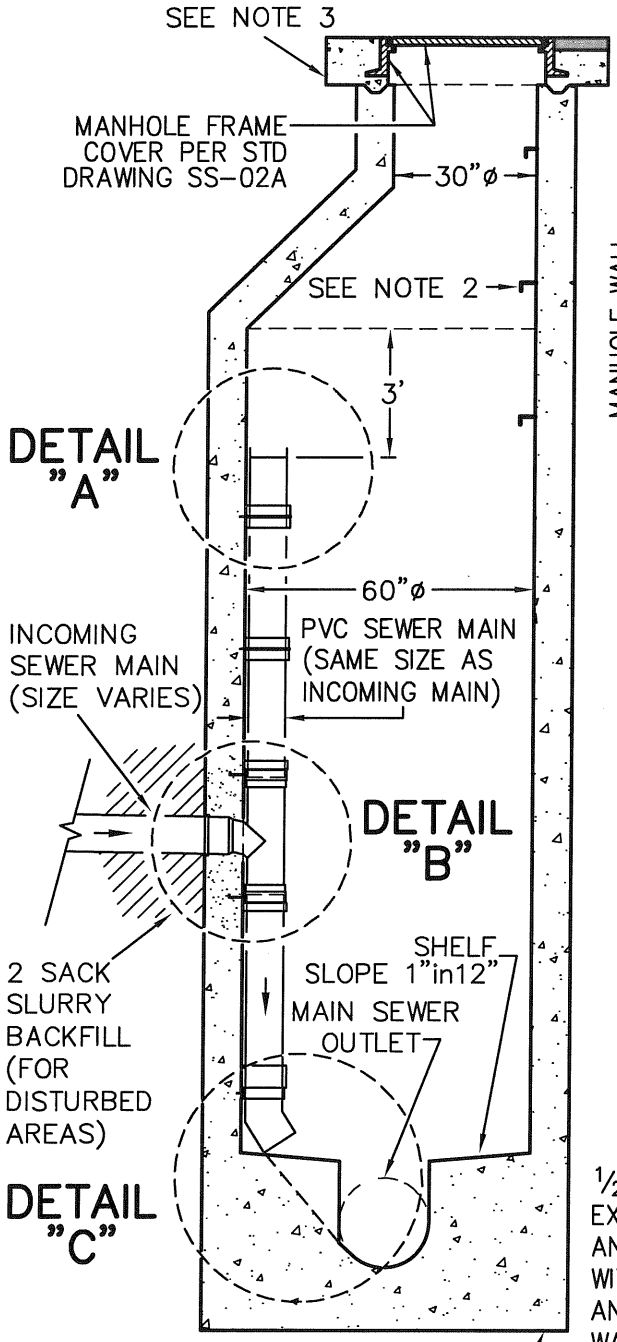

SECTIONAL VIEW
NOT TO SCALE

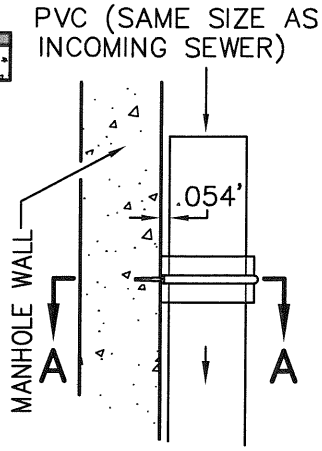

DETAIL "A"

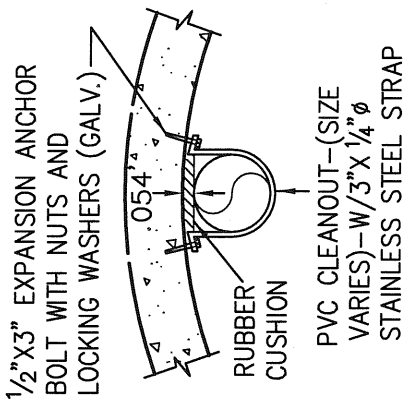

SECTION A–A

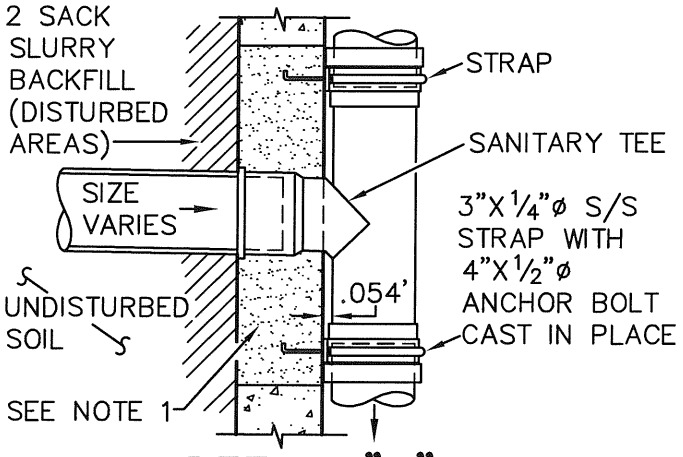

DETAIL "B"

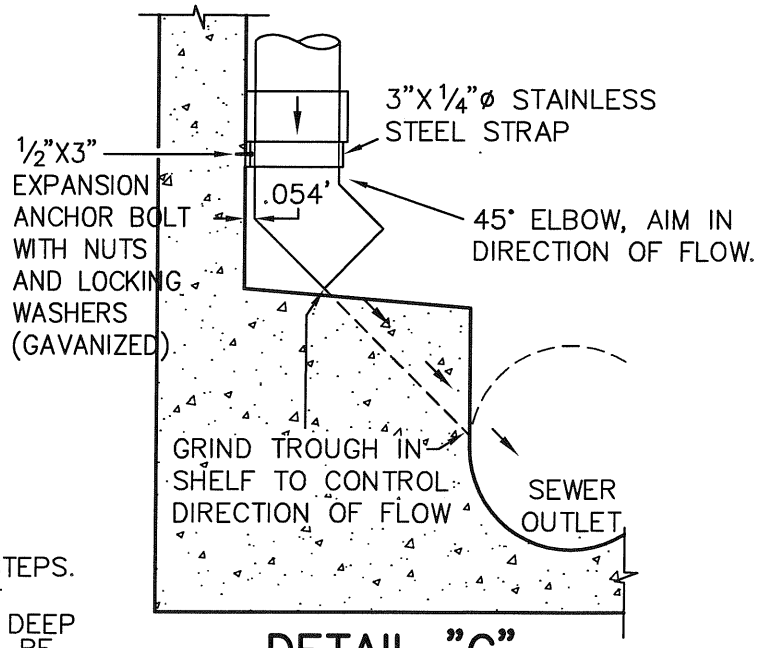

DETAIL "C"

NOTES:

1. CORE THROUGH MANHOLE WALL AND RECONSRUCT WITH WATERPROOF GROUT.
2. DROP PIPE SHALL NOT CONFLICT WITH STEPS.
3. IN AREAS WHERE MANHOLE IS IN A DIRT EASEMENT, A MINIMUM 12" WIDE BY 12" DEEP PAD OR PRE–CAST FRAME AND LID WILL BE REQUIRED AROUND MANHOLE LID AND FRAME.

APPROVED BY CITY ENGINEER		CITY OF VICTORVILLE - ENGINEERING DEPARTMENT	
		SANITARY SEWER MANHOLE WITH INTERNAL SEWER MAIN DROP	SS-07A
DATE	INITIALS		
04/08/09	J. McGlade	JOHN A. MCGLADE, CITY ENGINEER	SHEET 1 OF 1

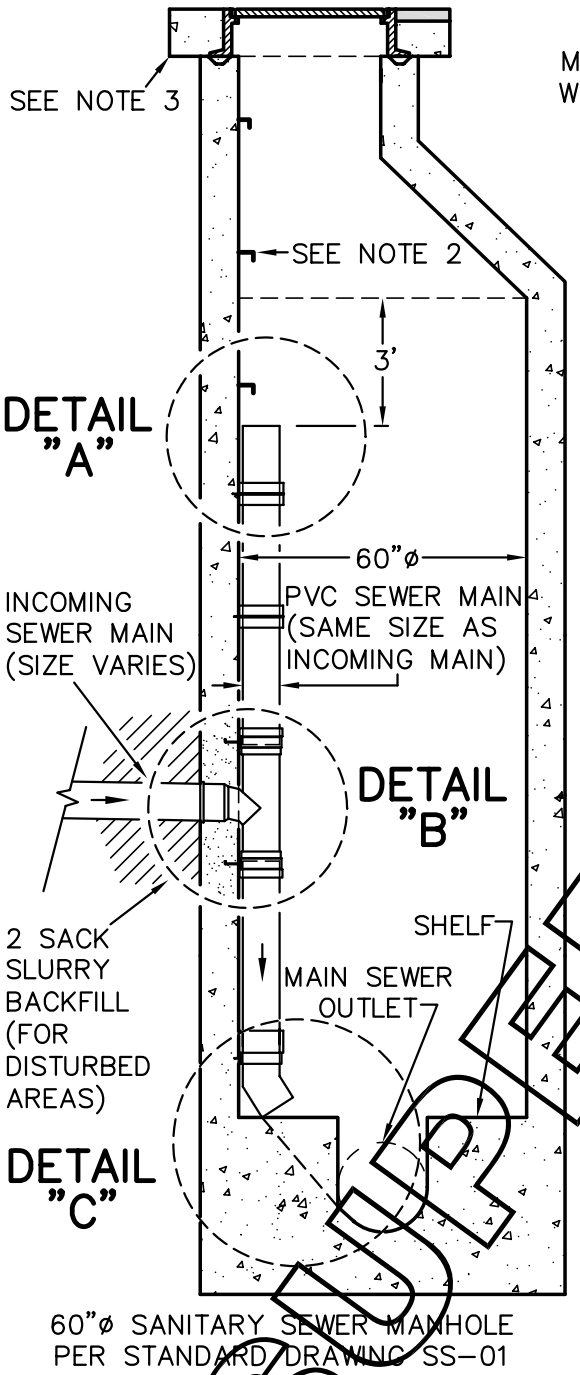

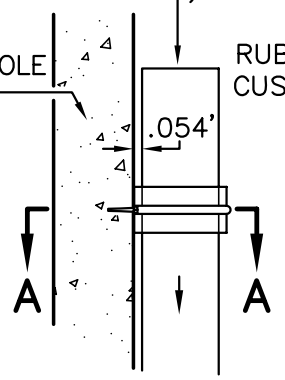

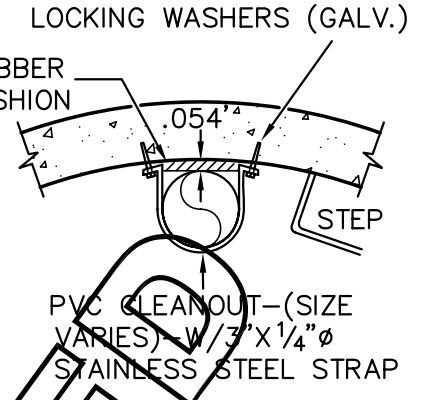

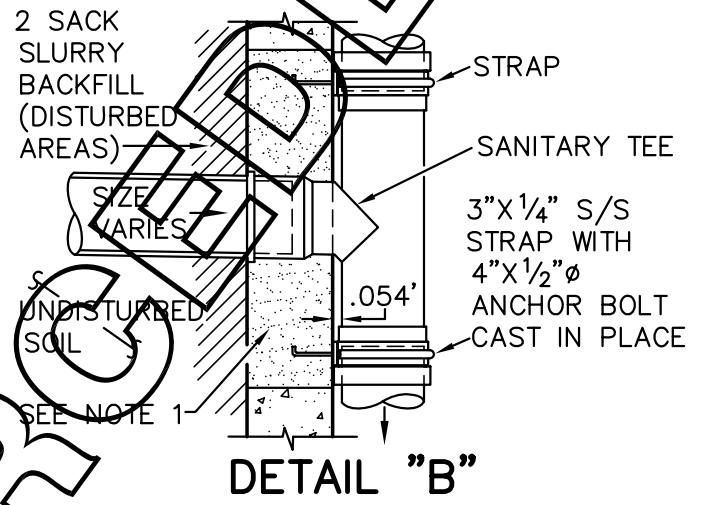

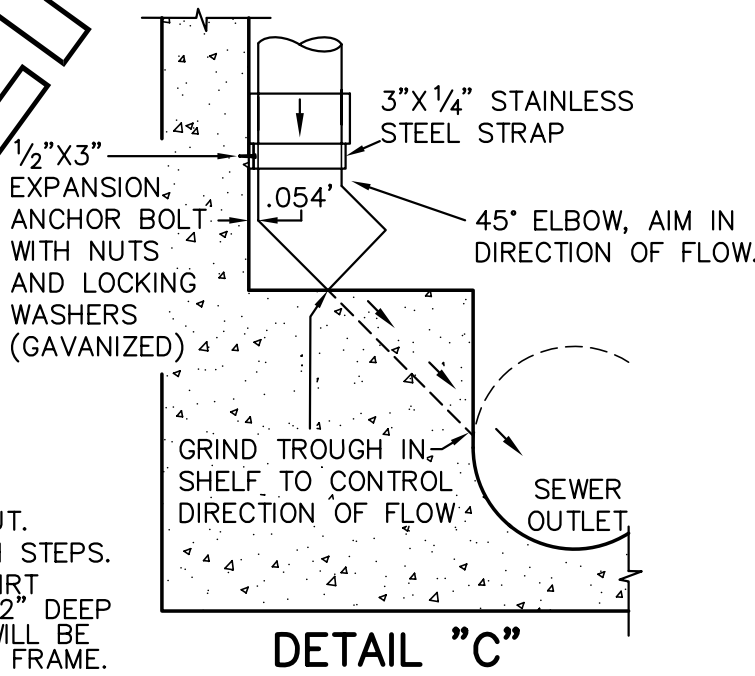

SUPERCEDED

NOTES:

1. CORE THROUGH MANHOLE WALL AND RECONSRUCT WITH WATERPROOF GROUT.
2. DROP PIPE SHALL NOT CONFLICT WITH STEPS.
3. IN AREAS WHERE MANHOLE IS IN A DIRT EASEMENT, A MINIMUM 12" WIDE BY 12" DEEP PAD OR PRE-CAST FRAME AND LID WILL BE REQUIRED AROUND MANHOLE LID AND FRAME.

CITY OF VICTORVILLE - ENGINEERING DEPARTMENT				
REV.	DATE	BY	SANITARY SEWER MANHOLE WITH INTERNAL SEWER MAIN DROP	SS-07A
	5/10/01	A.S.		
1	7/25/07	STAFF	JOHN A. MCGLADE, CITY ENGINEER	SHEET 1 OF 1

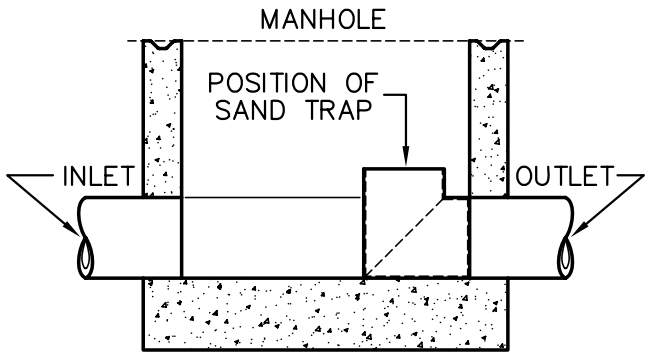

SECTIONAL VIEW OF MANHOLE WITH LOCATION OF SAND TRAP

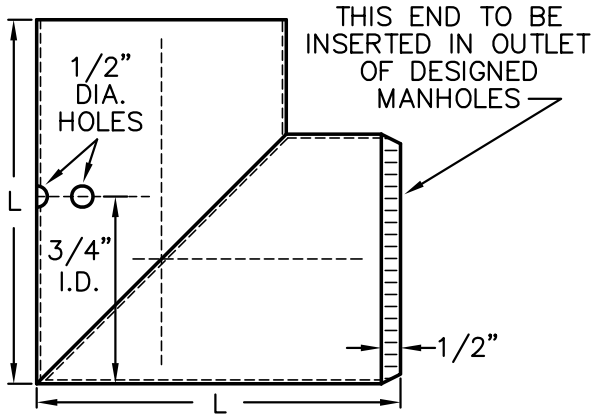

SIDE VIEW

DIMENSIONS OF TRAP

I.D.	LENGTH
8"	10–1/2"
10"	12–1/2"
12"	16"
15"	18"
18"	19"

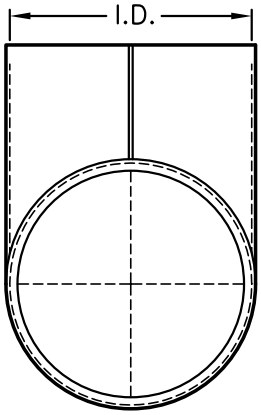

END VIEW

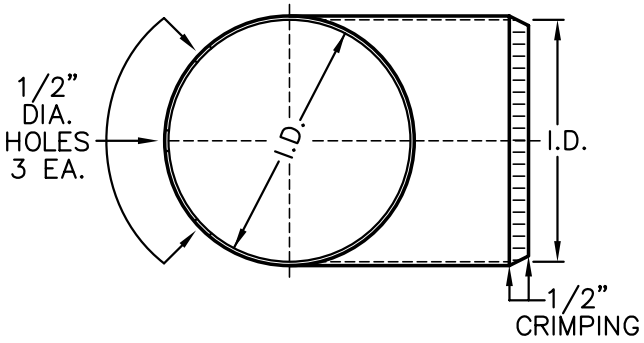

TOP VIEW

NOTES:

1. ALL SEAMS TO BE INTERLOCKING SEAMS AND SHALL BE SOLDERED.
2. TRAP TO BE CONSTRUCTED OF 20 GAUGE GALVANIZED SHEET METAL.
3. PLACE TRAPS IN ALL MANHOLES IN WORK AREA AND ONE IN MANHOLE BELOW WORK AREA BEFORE COMMENCING WORK.
4. CLEAN ALL MANHOLES AND REMOVE TRAPS AFTER COMPLETION OF WORK.

REV.	DATE	BY		
CITY OF VICTORVILLE - ENGINEERING DEPARTMENT				
1/18/67	PATTERSON		TEMPORARY SAND TRAP	SS-08
1	3/24/93	D.G.H.		
2	6/1/07	STAFF	JOHN A. McGLADE, CITY ENGINEER	SHEET 1 OF 1

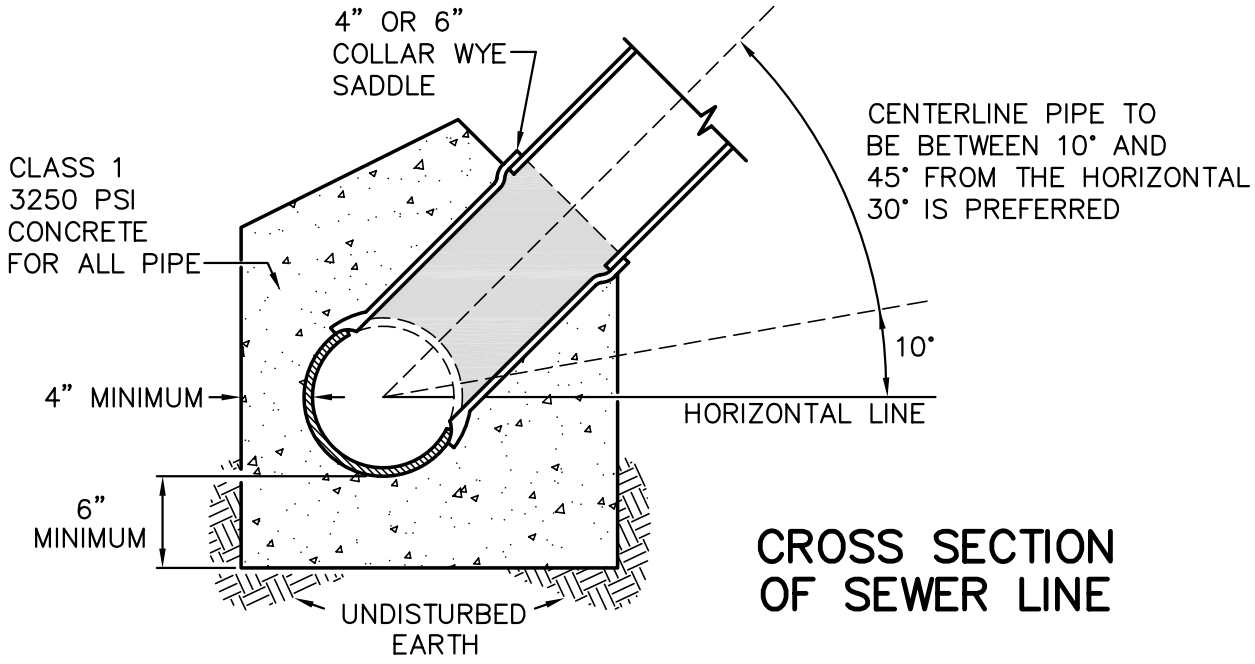

CROSS SECTION OF SEWER LINE

NOTES:

ALL PIPE

1. CALL FOR INSPECTION 2 WORKING DAYS IN ADVANCE OF CUTTING THE PIPE. INSPECTOR MUST BE PRESENT TO OVERSEE THE CUTTING AND SADDLING OPERATION.
2. IF PIPE IS CRACKED, BROKEN OR DAMAGED IN ANY WAY IT SHALL BE REPLACED.
3. MAKE NORMAL SIZE OPENING FOR SADDLE IN MAIN LINE SEWER PIPE 12" MINIMUM CLEAR OF THE BELL. ON CLAY PIPE SAWCUT ON CENTER OPENING AND USE NIPPERS TO ENLARGE OPENING TO SIZE. ON P.V.C. PIPE USE KEY HOLE SAW.
4. REPAIR STREET PER CITY STANDARD DRAWING S–10.

CLAY PIPE

5. WIRE SADDLE IN PLACE WITH 12 GAUGE GALVANIZED STEEL WIRE. USE SILICONE CAULK TO SEAL SADDLE TO PIPE. SADDLE MUST NOT PROTRUDE INTO THE MAIN LINE.
6. PLACE CLASS 1, 3250 PSI, CONCRETE AROUND MAIN LINE AND SADDLE AND 18" ALONG THE MAIN LINE PIPE PER THE CROSS SECTION ABOVE.
7. CURE CONCRETE BY COVERING WITH 12" OF WET EARTH. DO NOT BACKFILL UNTIL THE CONCRETE IS CURED SUFFICIENTLY TO WITHSTAND THE BACKFILL OPERATION.

P.V.C. PIPE

8. USE STANDARD MANUFACTURED SADDLES RECOMMENDED BY THE MAIN LINE PIPE MANUFACTURER BEING SADDLED. ALL SADDLES SHALL HAVE ELASTOMERIC SEALS AND SHALL BE INSTALLED PER THE MANUFACTURER'S RECOMMENDATIONS.
9. SADDLES SHALL BE BANDED TO THE MAIN LINE SEWER WITH A MINIMUM OF 2 EACH 1/2" WIDE STAINLESS STEEL BAND CLAMPS.
10. REPLACE PIPE BEDDING PER CITY STANDARD DRAWING SS–05 AND BACKFILL.

REV.	DATE	BY		
CITY OF VICTORVILLE - ENGINEERING DEPARTMENT				
	1/23/67	PATTERSON	SANITARY SEWER SADDLE	SS-09
1	3/24/93	D.G.H.		
2	6/1/07	STAFF	JOHN A. MCGLADE, CITY ENGINEER	SHEET 1 OF 1

BLANK INTENTIONALLY

CITY OF VICTORVILLE - ENGINEERING DEPARTMENT				
REV.	DATE	BY	PUMP STATION MANHOLE TOP SLAB	SS-10
	11/4/75	T.D.W.		
1	6/1/07	STAFF	JOHN A. McGLADE, CITY ENGINEER	SHEET 1 OF 1

OBSOLETE

CITY OF VICTORVILLE
INCORPORATED SEPT. 21, 1962
HOME OF THE SAN BERNARDINO COUNTY FAIR
CALIFORNIA

CITY OF VICTORVILLE ENGINEERING DEPT. FEES			
ITEM DESCRIPTION	**CURRENT FEE**	**AUTHORITY**	**LATEST REVISION**
1. MAP CHECKING Parcel Map Final Map	 $1,000.00 + $30.00/parcel 1,200.00 + 20.00/lot	 Reso. 97-73 ✓	
2. MAP CHECKING – REVERSION TO ACREAGE Parcel Map Required Final Map Required	 $ 500.00 600.00	 Reso. 97-73 ✓	
3. FINAL MAP & PARCEL MAP RE-CHECKING Actual staff time for 4th and each subsequent re-check Resulting from changes caused by the Engineer	 $ 15.00 minimum fee	 Reso. 97-73	
4. PARCEL MAP & FINAL MAP FILING Current recording fee required by Recorder for each map	 TBD by Recorder's Office	 Reso. 97-73	
5. IMPROVEMENT PLAN CHECKING Improvement Plan Check, Street, Sewer & Storm Drain Traffic Signal Plan Check (includes inspections Signal in City's jurisdiction Signal located in multi-jurisdictional intersection 6. Improvement Plan Re-checking (excludes Traffic Signal Plan Check) Actual staff time for 4th & each subsequent re-check Resulting from changes caused by the Engineer	 <u>Engineering Cost Estimate</u> <u>Fee</u> $ 0 - $ 25,000 4.0% 25,001 - 100,000 3.5% > - 100,001 3.0% <u>The above fees are accumulative.</u> <u>Fee</u> 1% ½% $ 15.00 minimum fee.	 Reso. 97-73 Reso. 97-73 Reso. 97-73	
7. CONSTRUCTION INSPECTION Re-inspection fee shall be rendered for each occasion when the contractor is not ready for the inspection at the scheduled time. No further inspections will be performed until said fee is paid.	<u>Engineer Cost Estimate</u> <u>Fee</u> $ 0 - $ 25,000 4.0% 25,001 - 100,000 3.5% > - 100,001 3.0% <u>The above fees are accumulative.</u> $100.00	Reso. 97-73 Reso. 97-73	

ITEM DESCRIPTION	CURRENT FEE	AUTHORITY	LATEST REVISION
8. GRANTS OF EASEMENTS DEED & OFFERS OF DEDICATIONS a. 1) Checking an "OF" description 2) Checking an "OF" description w/property return 3) Checking metes & bounds description w/all backup references and calcs. provided. b. 1) Preparation of an "OF" description 2) Preparation of an "OF" description w/property return 3) Preparation of a metes & bounds legal description.	 $ 10.00/parcel 15.00/parcel 25.00/parcel 15.00/parcel 20.00/parcel 100.00/parcel	Reso. 97-73 ✓ ✓ ✓ ✓ ✓ ✓	
9. CONSTRUCTION & EXCAVATION PERMIT INSPECTION FEE SCHEDULE <u>Trench Excavation:</u> 400 lin. ft or less 401 to 500 lin. ft. over 500 lin. ft. <u>Manholes, Catch Basins, Underground Vaults, etc.</u> 4 or less 5 to 10 Over 10 <u>Curbs, Gutters, Sidewalks and Street Surface not Associated with a Subdivision of Land</u> When the Superintendent of Streets determines that engineered plans are required prior to the issuance of a permit, fees for plan check and inspections shall be determined in accordance with the schedule contained in Reso. No. 97-73 for subdivisions.	 $ 0.10 per lin. ft. 40.00 plus 0.09 per lin. ft. over 400 lin ft. 49.00 plus 0.08 per lin ft. $ 8.00 each 32.00 plus $7.00 each over 4 67.00 plus $6.00 each over 10 TBD by Engineer	 Reso. 97-74 ✓ ✓ Reso. 97-74 ✓ ✓ Reso. 97-74	
Researching status of projects requested by persons other than property owner or developer.	Staff's actual time plus vehicle time where necessary	Reso. 97-75	

ITEM DESCRIPTION	CURRENT FEE	AUTHORITY	LATEST REVISION
Processing of vacations of Public Right-of-Way a. Summary vacation, applicant provide legal description & map b. Summary vacation, City prepares legal description & map c. Public hearing or 2-step vacation, applicant provides legal desc. & map. d. Public hearing or 2-step vacation, City prepares legal desc. & map.	 $ 75.00 Staff time less $10.00 $190.00 Staff time, less $10.00	 Reso. 97-76 ✓ ✓ ✓	
Monument Field Inspection	$20.00 + $2.00 per monument, fee paid prior to map recordation	Reso. 97-77	
REPAIR EXCAVATION, CONSTRUCTION PERMITS		Ordinance #1854	
Issuance Fee: Encroachment Permit Residential Driveway Const. Sidewalk, curb & gutter existing Commercial Driveway	$ 5.00 15.00 in addition to issuance fee 15.00 in addition to issuance fee 25.00 in addition to issuance fee 25.00 in addition to issuance fee	✓ ✓ ✓ ✓ ✓ ✓	

CITY OF VICTORVILLE
INCORPORATED SEPT. 21, 1962
HOME OF THE SAN BERNARDINO COUNTY FAIR
CALIFORNIA

CITY OF VICTORVILLE

ENGINEERING DEPARTMENT

WATER STANDARD SPECIFICATIONS FOR PUBLIC IMPROVEMENTS

All public improvements constructed by or under the inspection of the City of Victorville shall conform to these specifications and the references contained herein. The design and construction standards used for any project should equal or exceed the minimum given in these Water Standard Specifications to the maximum extent feasible. The design and construction standards that are set herein are to provide a guide for the engineers and contractors to exercise sound judgment in applying standards with the approval of the City Engineer.

Public improvements undertaken by the City of Victorville may deviate from these specifications with plan and specification approval by the City Engineer. In the event of conflicts between any provision contained in these Water Standard Specifications and the references contained herein, these Water Standard Specifications shall govern, unless they conflict with State or Federal regulations.

Date: October 21, 2008

John A. McGlade 10/21/08

John A. McGlade, P.E., City Engineer
R.C.E. 40935, Expires 3/31/09

REGISTERED PROFESSIONAL ENGINEER
JOHN A. McGLADE
No. 40935
Exp. 3/31/09
CIVIL
STATE OF CALIFORNIA

DRAWING INDEX

W-01 TYPICAL SERVICE INSTALLATION FOR 3/4" AND 1" METERS 2
W-02 BLANK INTENTIONALLY 1
W-03 TYPICAL SERVICE INSTALLATION FOR 1-1/2" AND 2" METERS 2
W-04 3" DOMESTIC SERVICE (2 SHEETS) 1
W-05 4" DOMESTIC SERVICE (2 SHEETS) 1
W-06 6" DOMESTIC SERVICE IN VAULT (2 SHEETS) 1
W-07 BLANK INTENTIONALLY 1
W-08 BLANK INTENTIONALLY 1
W-09 BLANK INTENTIONALLY 1
W-10 METER BOX PLACEMENT
W-11 STANDARD FIRE HYDRANT 3
W-12 BLOW-OFF FIRE HYDRANT 3
W-13 TYPICAL FIRE HYDRANT PAVEMENT MARKER INSTALLATION
W-14 PHASE BREAK END 1
W-15 TEMPORARY BLOW-OFF ASSEMBLY, 2" 1
W-16 4" BLOW-OFF ASSEMBLY 3
W-17 6" BLOW-OFF ASSEMBLY 3
W-18 VALVE CAN ASSEMBLY 1
W-19 VALVE OPERATOR EXTENSION 1
W-20 TYPICAL BUTTERFLY VALVE OPERATOR LOCATIONS
W-21 HOT TAP DETAIL - AC, PVC, DIP 1
W-22 TAPPING OUTLET - FOR STEEL PIPE
W-23 WELDED STEEL PIPE BUTT-JOINT WITH HANDHOLE
W-24 STANDARD 1" AIR AND VACUUM RELEASE VALVE ASSEMBLY 2
W-25 STANDARD 2" AIR AND VACUUM RELEASE VALVE ASSEMBLY 2
W-26 STANDARD 4" AIR AND VACUUM RELEASE VALVE ASSEMBLY 2
W-27 AIR & VACUUM VALVE ENCLOSURE
W-28 FIRE SERVICE - REDUCED PRESSURE DETECTOR ASSEMBLY
W-29 BLANK INTENTIONALLY 1
W-30 3" AND LARGER - REDUCED PRESSURE BACKFLOW DEVICE INSTALLATION 1
W-31 LMAD BACKFLOW DEVICE INSTALLATION 1
W-32 BLANK INTENTIONALLY 1
W-33 VAULT AND LID 1
W-34 SEPARATION CRITERIA FOR EXISTING WATER MAINS FROM NEW SANITARY SEWERS OR STORM DRAINS
W-35 SEPARATION CRITERIA FOR NEW WATER MAINS FROM EXISTING SANITARY SEWERS OR STORM DRAINS
W-36 TYPICAL TRENCH BACKFILL SCHEMATIC 1
W-37 CML&C STEEL PIPE / SEWER AND STORM DRAIN UNDERCROSSING 2
W-38 STEEL SLEEVE / SEWER AND STORM DRAIN UNDERCROSSING 2
W-39 2" AND SMALLER - REDUCED PRESSURE BACKFLOW DEVICE INSTALLATION 1
W-40 MINIMUM PROTECTION FOR FILLING WATER TRUCKS 1
W-41 CUTTING AND PLUGGING ABANDONED WATER MAINS
W-42 GUARD POST 1

CITY OF VICTORVILLE - ENGINEERING DEPARTMENT

REV.	DATE	BY		
3	6/9/16	STAFF	**WATER STANDARD DRAWINGS**	**W - INDEX**
2	4/6/16	STAFF		
1	7/24/14	STAFF	BRIAN W. GENGLER, CITY ENGINEER	SHEET 1 OF 1

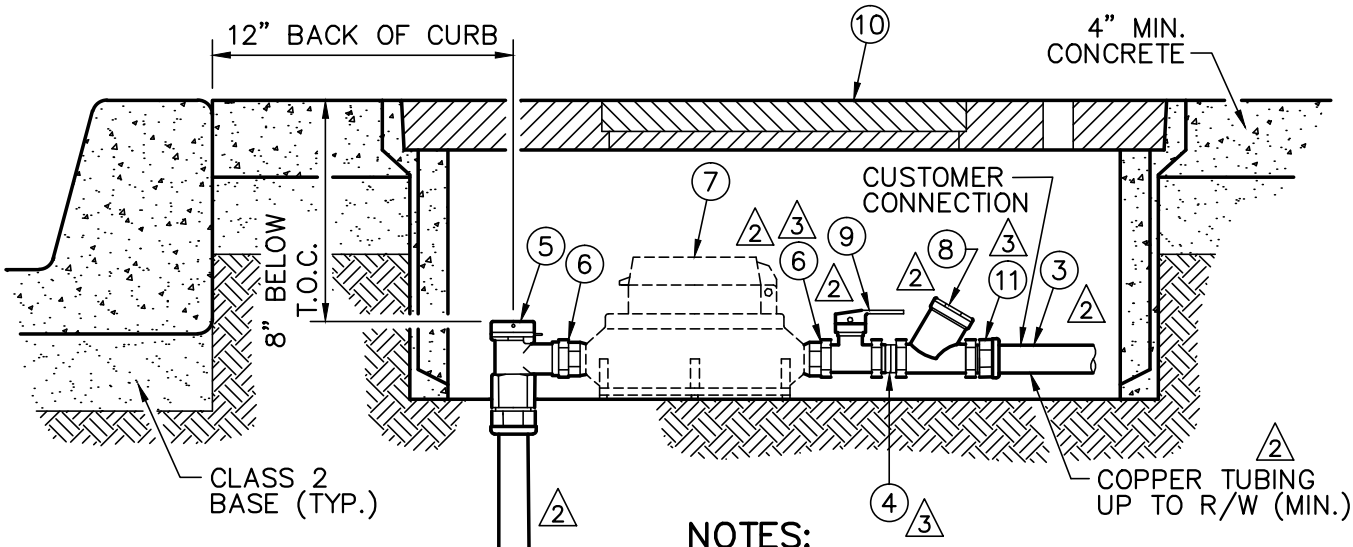

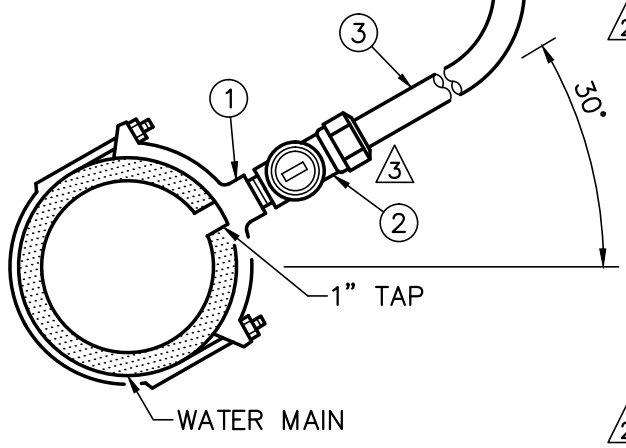

NOTES:

A. CONTRACTOR TO DISCUSS WATER SERVICE "GOOSENECK" WITH INSPECTOR PRIOR TO BEGINNING WORK.

B. ALL SERVICE LINES SHALL BE MINIMUM DEPTH OF 24" BELOW FINISHED GRADE.

C. ALL SERVICE MATERIAL SHALL BE NEW: REFER TO STD. DWG. W-10 FOR PLACEMENT OF ANGLE STOP AND METER BOX. (2)

D. IF REQUIRED BY INSPECTOR, LOCATING WIRE TO RUN FROM MAIN, TIED IN WITH INSULATING CONNECTORS, ALONG SERVICE LATERAL, UP TO, AND CONNECTED TO ANGLE METER STOP.

E. PRIOR TO INSTALLATION OF METER BY VWD: CONTRACTOR MUST FURNISH ITEMS 8, 9 AND 10; ITEMS SHALL BE AVAILABLE AT JOB SITE TO BE INSTALLED BY VWD.

F. ALL COMMERCIAL/INDUSTRIAL METERS REQUIRE A DEPARTMENT OF PUBLIC HEALTH-APPROVED, OWNER INSTALLED, REDUCED PRESSURE BACKFLOW PREVENTION DEVICE TO BE TESTED PRIOR TO SERVICE ACTIVATION IN ACCORDANCE WITH W-39. (2)

ITEM	DESCRIPTION	APPROVED MATERIAL LIST NUMBER
1	"MAIN SIZE" x 1" SERVICE SADDLE	7-B
2	1" CORP. STOP (MIP x COMPRESSION) (3)	2-C
3	1" SERVICE LATERAL (LENGTH VARIES)	1-D
4	1" NIPPLE (3)	6-D
5	1" x 1" ANGLE METER STOP	2-E
6	3/4" x 1" METER BUSHING (NOT REQUIRED ON 1" METERS) (2)	13-B
7	METER (FURNISHED AND INSTALLED BY VWD)	13-C
8	1" SINGLE SPRING CHECK VALVE (3)	2-H
9	1" BALL VALVE (3)	2-I
10	METER BOX	9-D
11	1" SERVICE FITTING (MIP X C110) (3)	6-D

CITY OF VICTORVILLE - ENGINEERING DEPARTMENT

REV.	DATE	BY		
3	4/5/16	STAFF	**TYPICAL SERVICE INSTALLATION FOR 3/4" AND 1" METERS**	**W-01**
2	3/12/15	STAFF		
1	10/16/08	STAFF	BRIAN W. GENGLER, CITY ENGINEER	SHEET 1 OF 1

BLANK INTENTIONALLY

CITY OF VICTORVILLE - ENGINEERING DEPARTMENT				
REV.	DATE	BY	**BLANK INTENTIONALLY**	**W-02**
2	7/2/14	STAFF		
1	7/10/08	STAFF	BRIAN W. GENGLER, CITY ENGINEER	SHEET 1 OF 1

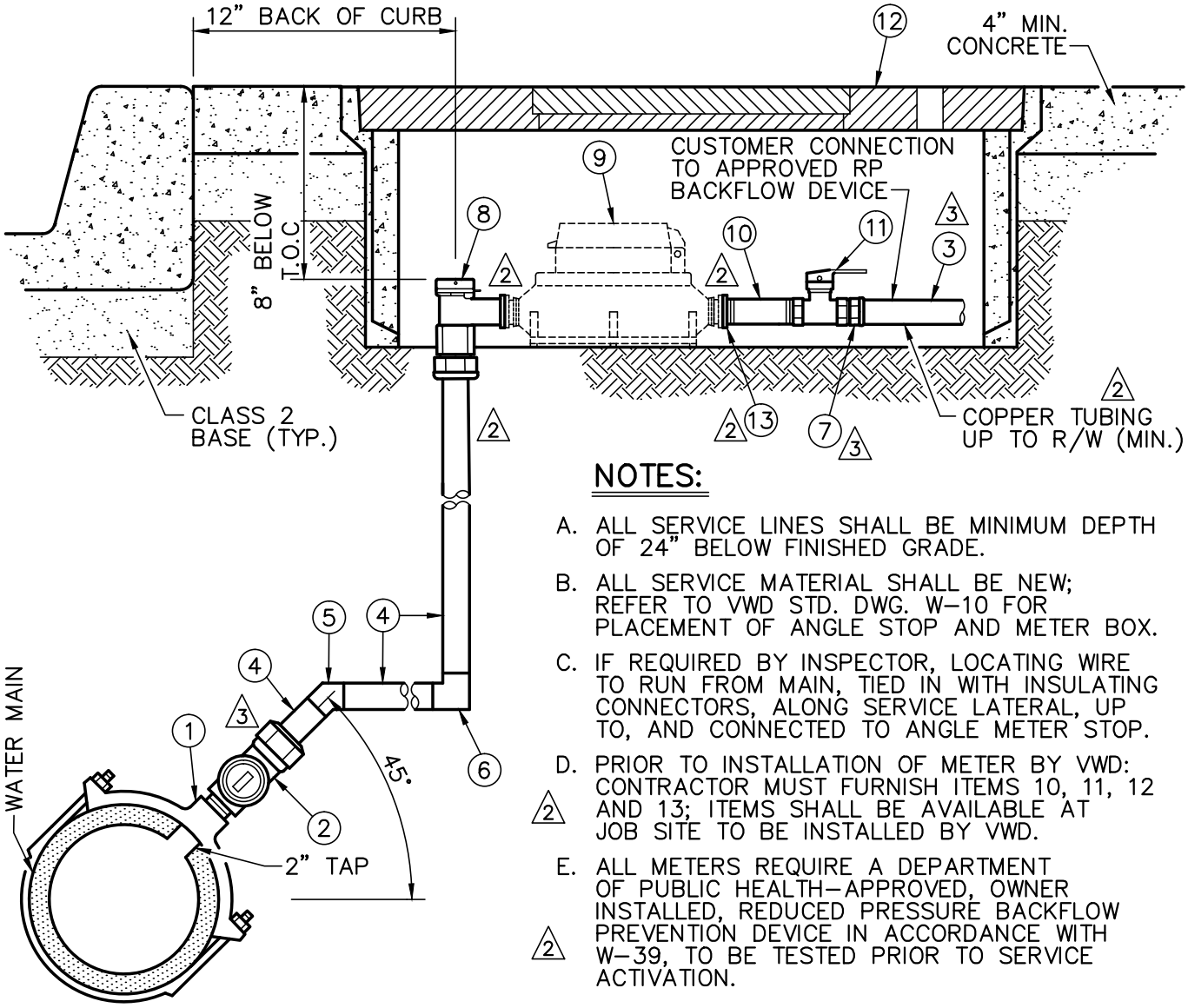

NOTES:

A. ALL SERVICE LINES SHALL BE MINIMUM DEPTH OF 24" BELOW FINISHED GRADE.

B. ALL SERVICE MATERIAL SHALL BE NEW; REFER TO VWD STD. DWG. W-10 FOR PLACEMENT OF ANGLE STOP AND METER BOX.

C. IF REQUIRED BY INSPECTOR, LOCATING WIRE TO RUN FROM MAIN, TIED IN WITH INSULATING CONNECTORS, ALONG SERVICE LATERAL, UP TO, AND CONNECTED TO ANGLE METER STOP.

D. PRIOR TO INSTALLATION OF METER BY VWD: CONTRACTOR MUST FURNISH ITEMS 10, 11, 12 AND 13; ITEMS SHALL BE AVAILABLE AT JOB SITE TO BE INSTALLED BY VWD. (2)

E. ALL METERS REQUIRE A DEPARTMENT OF PUBLIC HEALTH-APPROVED, OWNER INSTALLED, REDUCED PRESSURE BACKFLOW PREVENTION DEVICE IN ACCORDANCE WITH W-39, TO BE TESTED PRIOR TO SERVICE ACTIVATION. (2)

ITEM	DESCRIPTION	APPROVED MATERIAL LIST NUMBER
1	"MAIN SIZE" x 2" SERVICE SADDLE	7-B
2	2" CORP. STOP (MIP x COMPRESSION) (3)	2-D
3	1.5" SERVICE (FOR 1.5" METER) OR 2" SERVICE FOR (FOR 2" METER) (3)	1-D
4	2" SERVICE LATERAL (LENGTH VARIES)	1-D
5	2" - 45° FITTING (SOLDER) (3)	6-D
6	2" - 90° ELBOW (SOLDER)	6-D
7	1 1/2" SERVICE FITTING (MIP X C110) OR 2" SERVICE FITTING (MIP X C110) (3)	6-D
8	2" ANGLE METER STOP (COMPRESSION x FLG) (2)	2-F
9	METER (FURNISHED AND INSTALLED BY VWD) (2)	13-C
10	1 1/2" NIPPLE (FOR 1 1/2" METER) OR 2" NIPPLE (FOR 2" METER) (2)	6-D
11	1 1/2" BALL VALVE (FOR 1 1/2" METER) OR 2" BALL VALVE (FOR 2" METER) (2)	2-I
12	METER BOX	9-E
13	1 1/2" FLANGE ADAPTOR (FLG x FIP) OR 2" FLANGE ADAPTOR (FLG x FIP) (2)	6-D

CITY OF VICTORVILLE - ENGINEERING DEPARTMENT

REV.	DATE	BY		
3	4/5/16	STAFF	**TYPICAL SERVICE INSTALLATION FOR 1 1/2" AND 2" METERS**	**W-03**
2	3/12/15	STAFF		
1	10/16/08	STAFF	BRIAN W. GENGLER, CITY ENGINEER	SHEET 1 OF 1

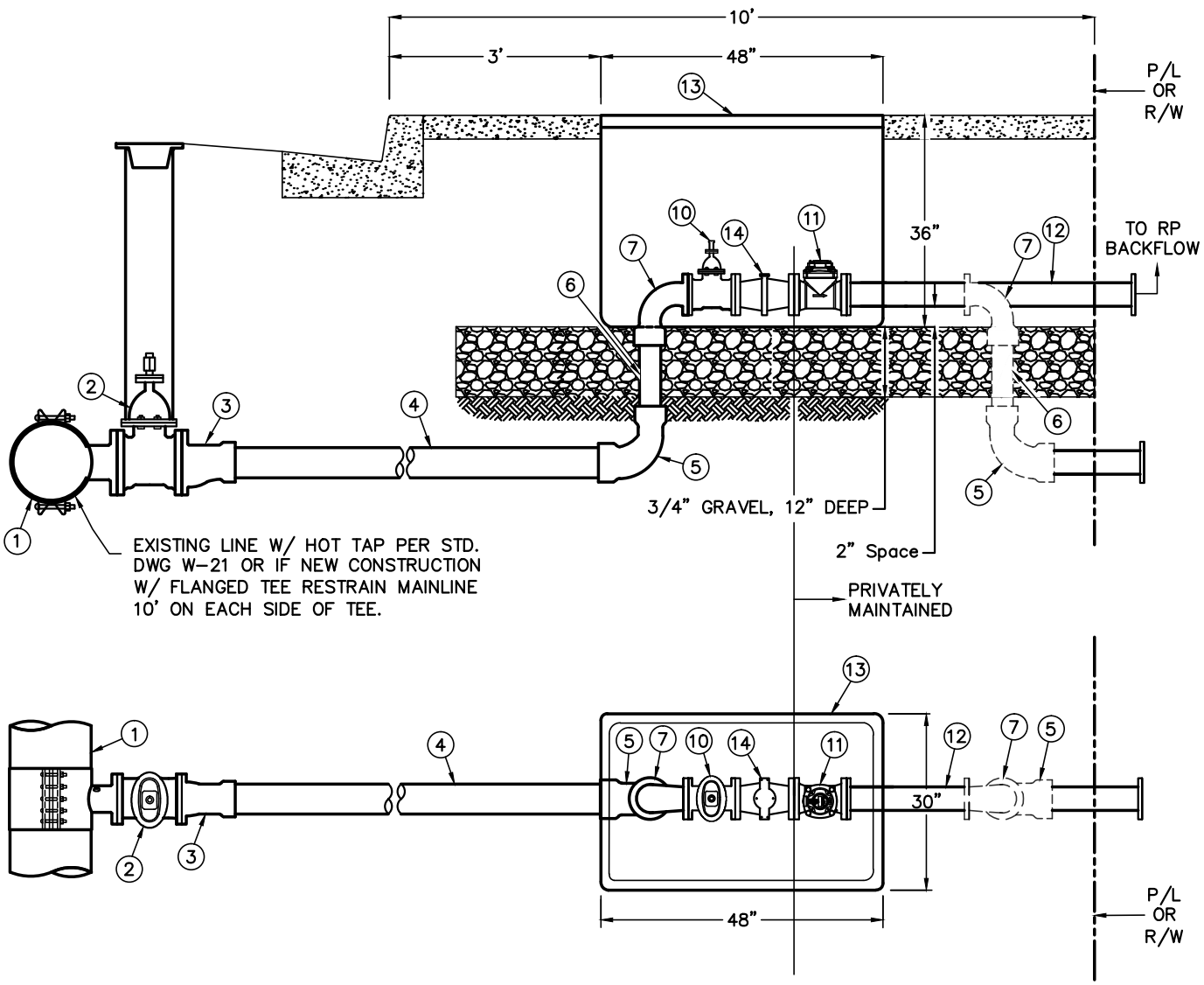

NOTES:

A. **ALL JOINTS TO BE RESTRAINED.** (SEE ITEM 5 OF APPROVED MATERIALS LIST) 2

B. SEE SHEET 2 OF 2 FOR CONSTRUCTION NOTES. #

CITY OF VICTORVILLE - ENGINEERING DEPARTMENT				
REV.	DATE	BY	**3" DOMESTIC SERVICE**	**W-04**
2	9/18/14	STAFF		
1	10/16/08	STAFF	BRIAN W GENGLER, CITY ENGINEER	SHEET 1 OF 2

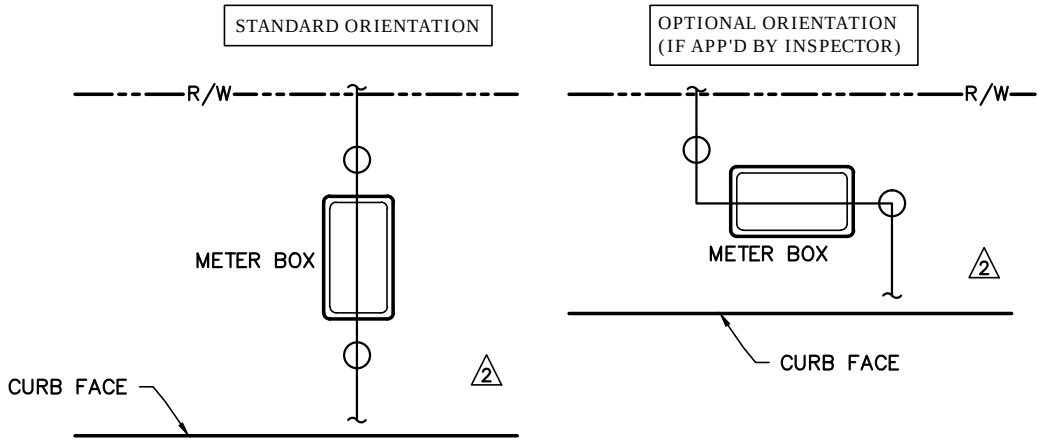

2

CONSTRUCTION NOTES

ITEM	DESCRIPTION	APPROVED MATERIAL LIST NUMBER
1	6" TAPPING SLEEVE	7–A
2	6" GATE VALVE (FL x FL) W/ VALVE CAN ASSEMBLY	2–B
3	6" x 4" ECCENTRIC REDUCER (FL X MJ), INSTALL WITH TOP LEVEL	6–C
4	4" DIP PIPE	1–C
5	4" – 3" REDUCING 90° BEND (MJ)	6–C
6	3" PE SPOOL, CUT TO FIT	6–E
7	3" 90° BEND (MJ x FL) GRIP RING PACK	6–C
8	NOT REQUIRED	
9	NOT REQUIRED	
10	3" FL x FL GATE VALVE W/ OPERATING NUT	2–B
11	3" OCTAVE METER	13–C
12	3" FL SPOOL	6–E
13	#8 METER BOX LID + COVER	9–E
14	3" STRAINER	13–L

CITY OF VICTORVILLE - ENGINEERING DEPARTMENT

REV.	DATE	BY		
2	9/18/14	STAFF	**3" DOMESTIC SERVICE**	**W-04**
1	8/13/08	STAFF	BRIAN W GENGLER, CITY ENGINEER	SHEET 2 OF 2

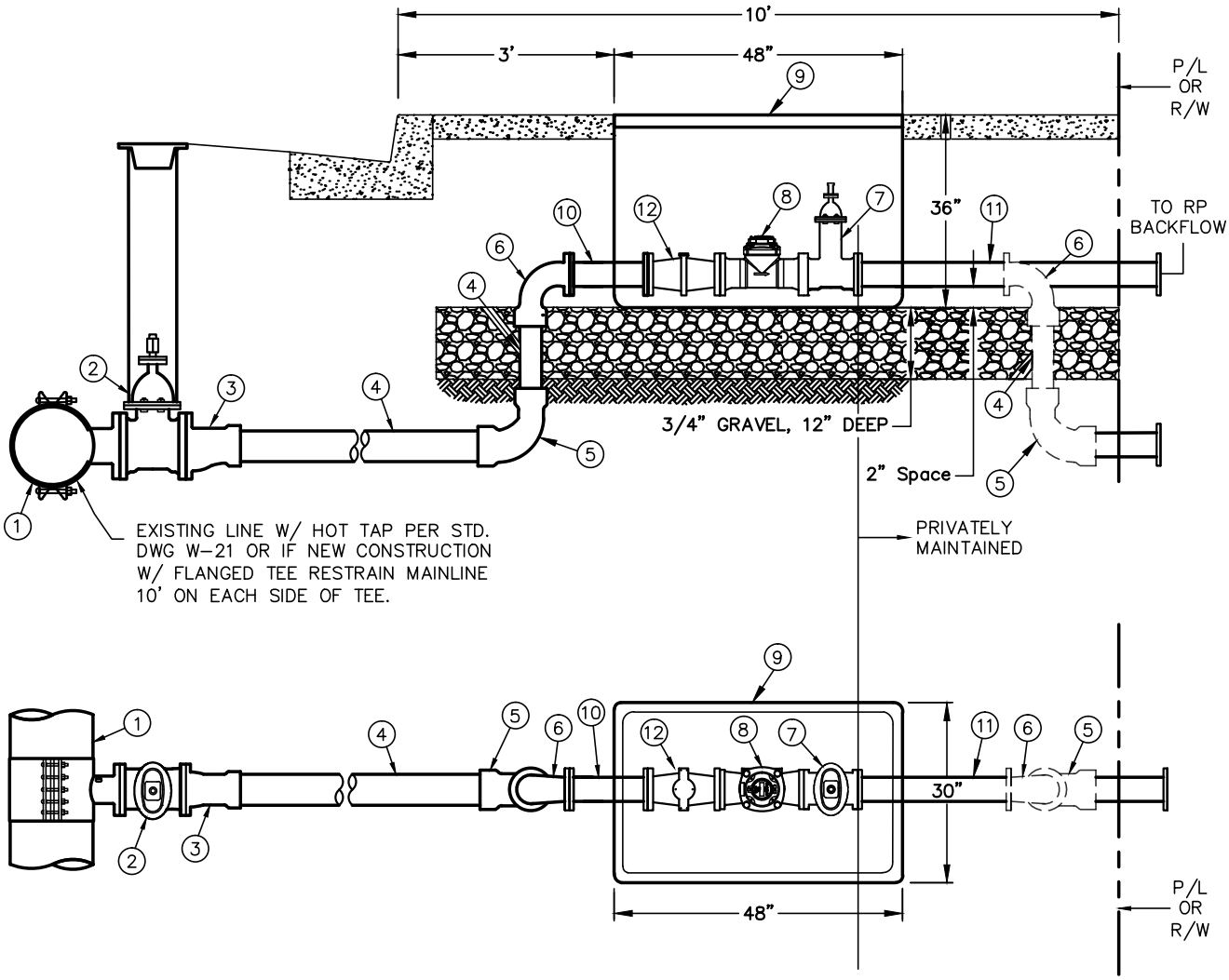

NOTES:

A. IF CONNECTING TO A 6" MAIN LINE, THE CITY MAY REQUIRE AN AIR VAC TO BE INSTALLED ON METER ASSEMBLY. SEE STD. DWG. W-24 FOR DETAIL. (2)

B. ANY PENETRATIONS THROUGH VAULT SHALL BE DRY PACKED. (2)

C. RESTRAIN ALL JOINTS. (SEE ITEM 5 ON APPROVED MATERIALS LIST) (2)

D. IF ANY PART OF THIS ASSEMBLY IS OUTSIDE THE PUBLIC RIGHT-OF-WAY, OWNER MUST DEDICATE TO VWD A 5' EASEMENT ON ALL SIDES.

E. SEE SHEET 2 OF 2 FOR CONSTRUCTION NOTES. (#)

CITY OF VICTORVILLE - ENGINEERING DEPARTMENT				
REV.	DATE	BY	4" DOMESTIC SERVICE	W-05
2	9/18/14	STAFF		
1	10/16/08	STAFF	BRIAN W GENGLER, CITY ENGINEER	SHEET 1 OF 2

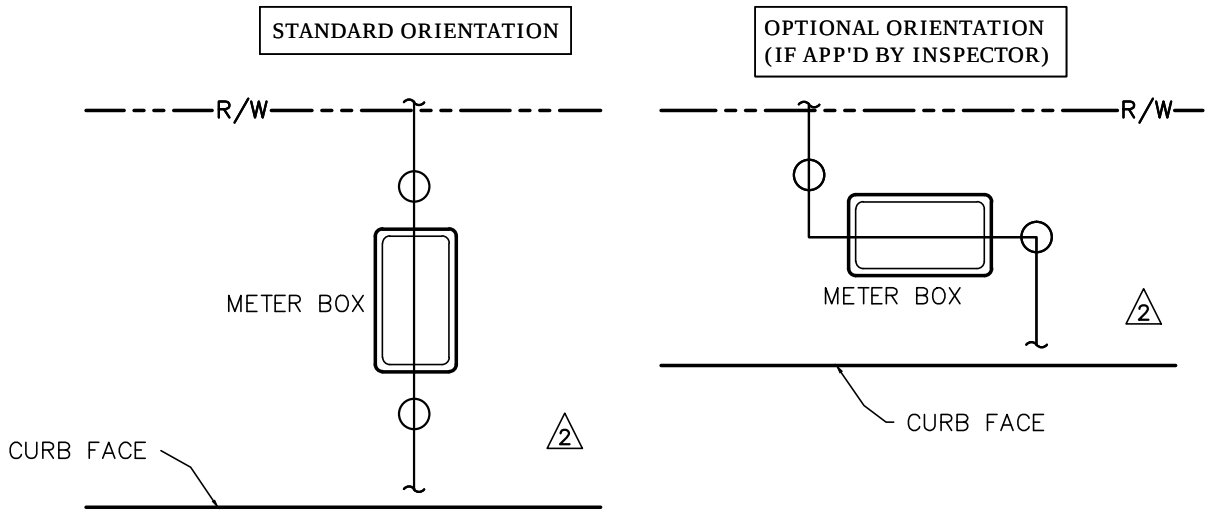

2

CONSTRUCTION NOTES

ITEM	DESCRIPTION	APPROVED MATERIAL LIST NUMBER
1	6" TAPPING SLEEVE	7–A
2	6" GATE VALVE (FL x FL) W/ VALVE CAN ASSEMBLY	2–B
3	6" x 4" ECCENTRIC REDUCER (INSTALL WITH TOP LEVEL)	6–C
4	4" DIP PIPE	1–C
5	4" MJ x MJ 90° BEND	6–C
6	4" 90° BEND (MJ x FL) GRIP RING PACK	6–C
7	4" FL x FL GATE VALVE W/ OPERATING NUT	2–B
8	4" OCTAVE METER	13–C
9	#8 METER BOX LID & COVER	9–E
10	4" x 13" FL x FL SPOOL	6–E
11	4" FL SPOOL	6–E
12	4" STRAINER	13–L

CITY OF VICTORVILLE - ENGINEERING DEPARTMENT				
REV.	DATE	BY	4" DOMESTIC SERVICE	W-05
2	9/18/14	STAFF		
1	8/13/08	STAFF	BRIAN W. GENGLER, CITY ENGINEER	SHEET 2 OF 2

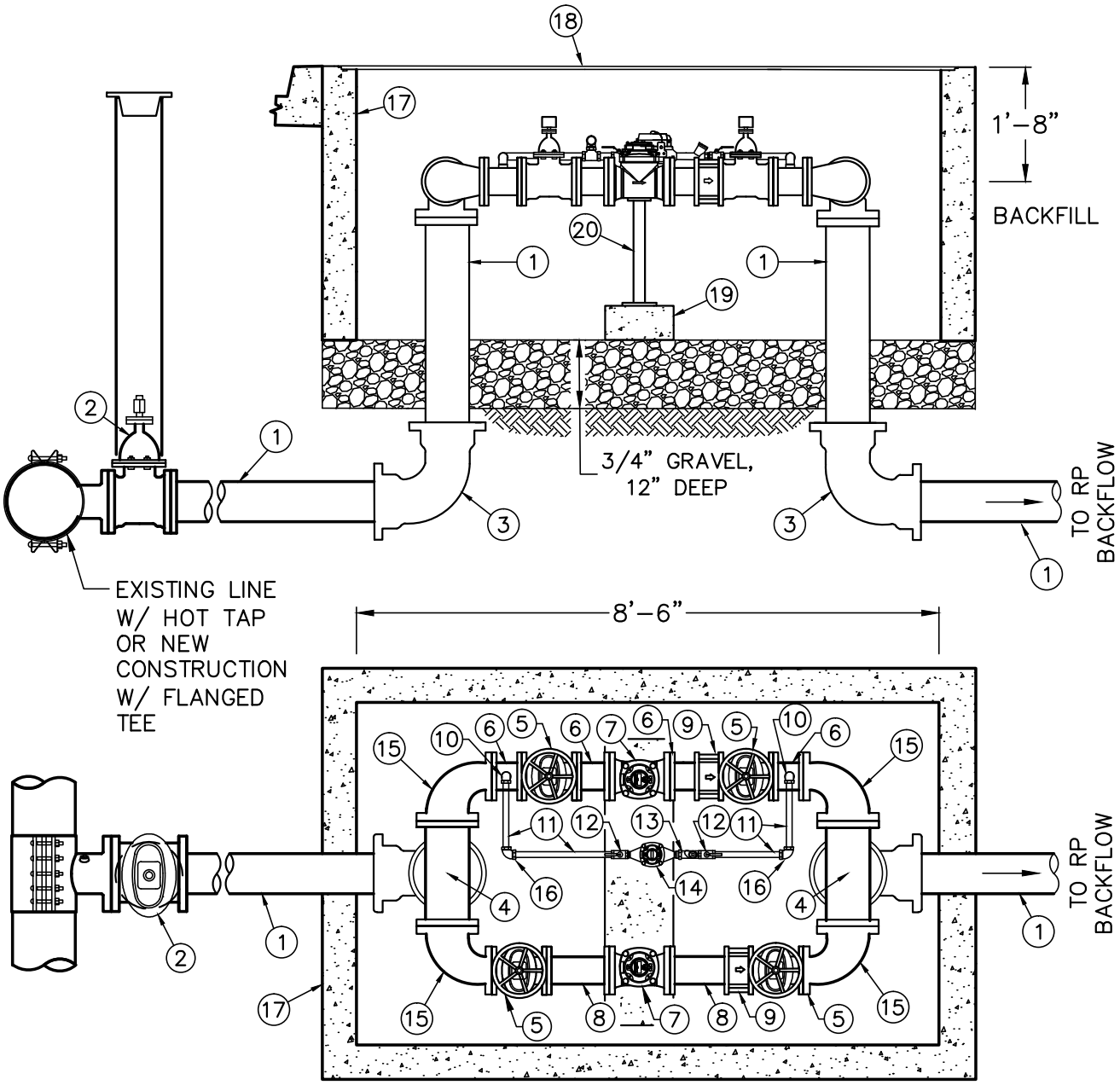

NOTES:

A. IF CONNECTING TO A 6" MAIN LINE, DEVELOPER SHALL INSTALL AN AIR VAC ON METER ASSEMBLY. SEE STD. DWG. W–24 FOR DETAIL.

B. SPOOL PENETRATIONS THROUGH VAULT SHALL BE DRY PACKED.

C. RESTRAIN ALL JOINTS. (SEE ITEM 5 OF APPROVED MATERIALS LIST)

D. IF ANY PART OF THIS ASSEMBLY IS OUTSIDE THE PUBLIC RIGHT–OF–WAY, OWNER MUST DEDICATE TO VWD A 5' EASEMENT ON ALL SIDES.

E. SEE SHEET 2 OF 2 FOR CONSTRUCTION NOTES. (#)

CITY OF VICTORVILLE - ENGINEERING DEPARTMENT				
REV.	DATE	BY	**6" DOMESTIC SERVICE IN VAULT**	**W-06**
2	12/18/14	STAFF		
1	10/16/08	STAFF	BRIAN W. GANGLER, CITY ENGINEER	SHEET 1 OF 2

STANDARD ORIENTATION

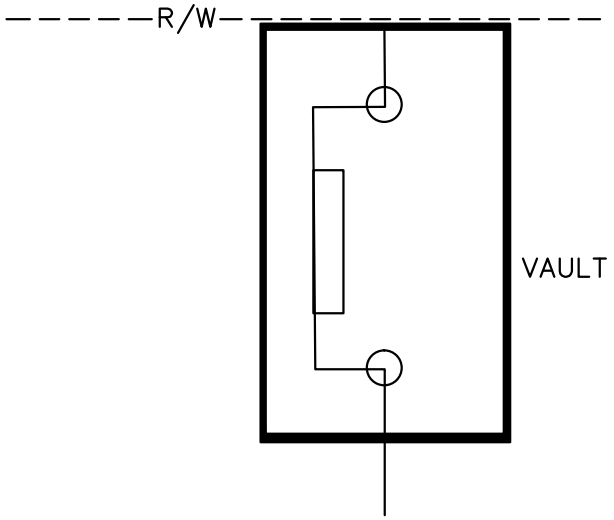

OPTIONAL ORIENTATION
(IF APP'D BY INSPECTOR)

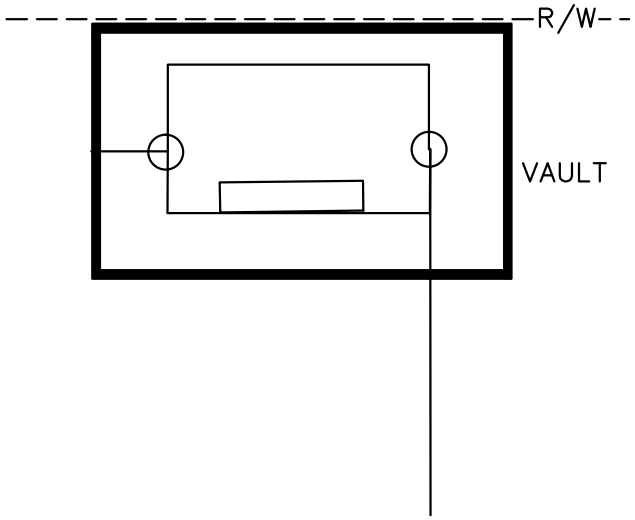

CONSTRUCTION NOTES

ITEM	DESCRIPTION	APPROVED MATERIAL LIST NUMBER
1	6" CLASS 350 DUCTILE IRON, CUT TO FIT	1–C
2	6" GATE VALVE (FL x MJ) W/ VALVE CAN ASSEMBLY	2–B
3	6" MJ x MJ 90° BEND	6–C
4	6" FL x FL x FL TEE, TURNED DOWNWARD	6–B
5	4'' GATE VALVE (FL x FL) W/ HANDWHEEL NRS	2–B
6	4" ø x 6" (FL x FL) SPOOL, W/ 1" THREADED TAP	6–E
7	4" METER	13–C
8	4" ø x 12" (FL x FL) SPOOL	6–E
9	4" WAFER CHECK VALVE	2–J
10	1" 90° BEND, (FIP x MIP)	6–D
11	1" TUBING, CUT TO FIT	1–D
12	1" BALL VALVE (FIP x FIP)	2–I
13	1" CHECK VALVE	2–H
14	1" METER	13–C
15	6" x 4" REDUCING 90° BEND	6–C
16	1" 90° BEND (MIP x MIP)	6–D
17	60" x 102" x 36"D PRECAST CONCRETE VAULT	STD. DWG. W–33
18	VAULT LID	STD. DWG. W–33
19	12"W x 27"L x 6"D CONCRETE PAD	
20	STEEL PEDESTAL PIPE SUPPORT UNDER EACH METER	13–D

CITY OF VICTORVILLE - ENGINEERING DEPARTMENT

REV.	DATE	BY		
2	12/18/14	STAFF	**6" DOMESTIC SERVICE IN VAULT**	**W-06**
1	8/13/08	STAFF	BRIAN W. GANGLER, CITY ENGINEER	SHEET 2 OF 2

BLANK INTENTIONALLY

CITY OF VICTORVILLE - ENGINEERING DEPARTMENT				
REV.	DATE	BY	**BLANK INTENTIONALLY**	**W-07**
2	7/3/14	STAFF		
1	7/10/08	STAFF	BRIAN W. GENGLER, CITY ENGINEER	SHEET 1 OF 1

BLANK INTENTIONALLY

CITY OF VICTORVILLE - ENGINEERING DEPARTMENT				
REV.	DATE	BY	**BLANK INTENTIONALLY**	**W-08**
2	7/3/14	STAFF		
1	7/10/08	STAFF	BRIAN W. GENGLER, CITY ENGINEER	SHEET 1 OF 1

BLANK INTENTIONALLY

CITY OF VICTORVILLE - ENGINEERING DEPARTMENT				
REV.	DATE	BY	BLANK INTENTIONALLY	W-09
2	7/2/14	STAFF		
1	7/10/08	STAFF	BRIAN W. GENGLER, CITY ENGINEER	SHEET 1 OF 1

NOTES:

A. ALL METER SERVICES, MUST BE INSTALLED AS SHOWN UNLESS OTHERWISE APPROVED BY THE ENGINEER.

B. PRIOR TO POURING THE SIDEWALK, THE METER BOX PLACEMENT MUST BE INSPECTED.

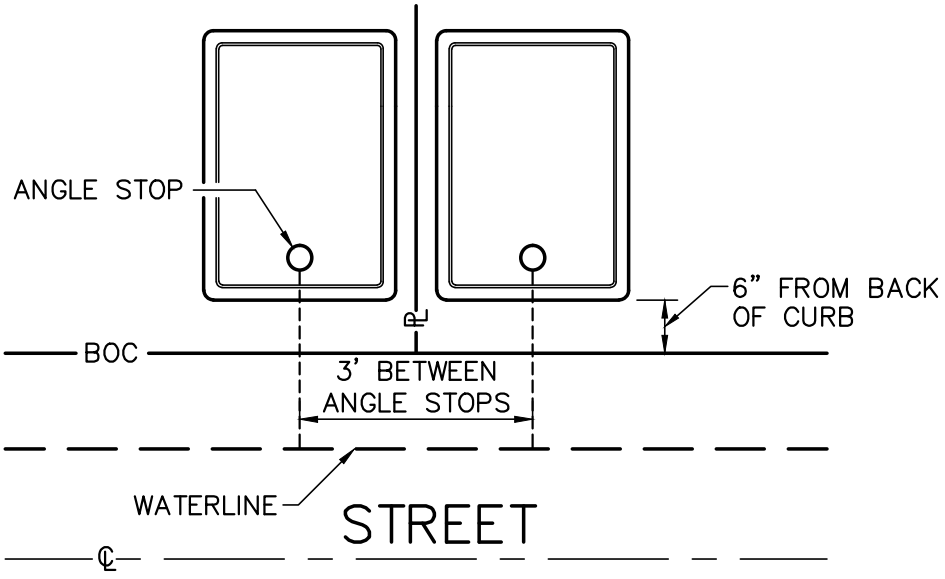

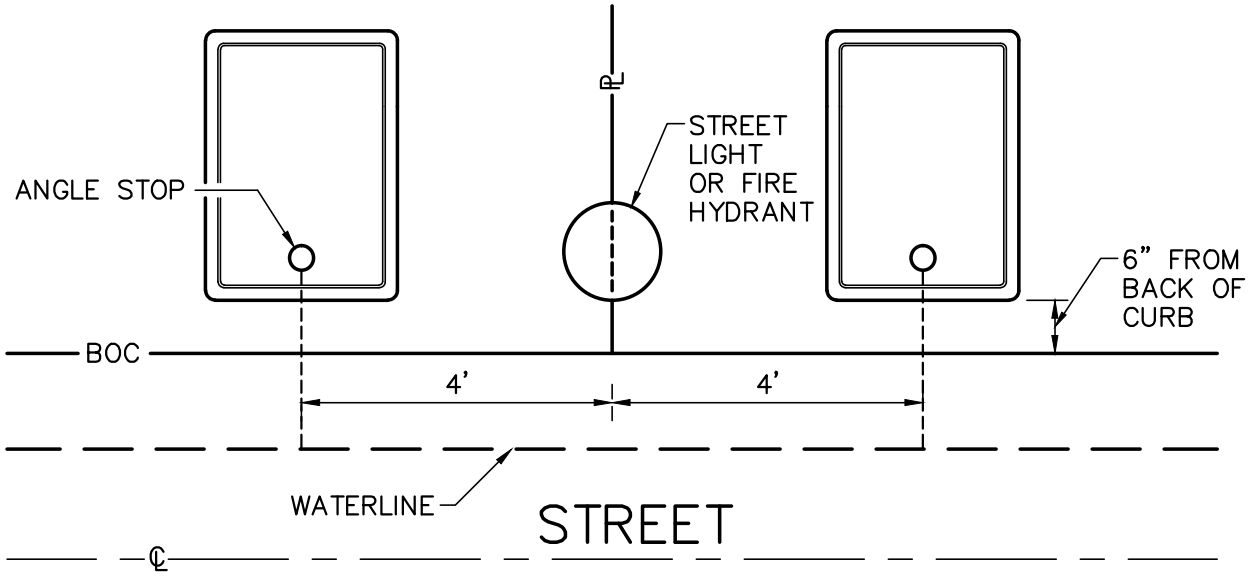

CITY OF VICTORVILLE - ENGINEERING DEPARTMENT				
REV.	DATE	BY	**METER BOX PLACEMENT**	**W-10**
2	12/18/14	STAFF		
1	8/13/08	STAFF	BRIAN W. GENGLER, CITY ENGINEER	SHEET 1 OF 1

NOTES:

A. ANY WATER FACILITIES IN CONTACT WITH CONCRETE REQUIRE A BOND BREAKER.

B. WEEP HOLE ON HYDRANT BARREL MUST BE CLEAR OF OBSTRUCTIONS.

C. CENTER OF HYDRANT IS TO BE PLACED AT PROPERTY LINE, OR 5 FOOT FROM BCR OR ECR, OR AS DIRECTED BY INSPECTOR.

D. HYDRANT LATERAL LENGTH IS VARIABLE – TO BE SPECIFIED ON PLAN DRAWINGS. LATERAL MUST BE INSTALLED STRAIGHT AND LEVEL, WITH NO DEFLECTION AT JOINTS ALLOWED. **ALL JOINTS TO BE RESTRAINED.** (SEE ITEM 5 OF APPROVED MATERIALS LIST)

E. LOCATING WIRE TO RUN FROM MAIN, (TIED IN WITH INSULATING CONNECTORS) ALONG HYDRANT LATERAL AND CONNECTED TO SNAKEPIT MAGNETIZED TRACER BOX.

F. WHERE NO SIDEWALK IS TO BE CONSTRUCTED, A 3'x3'x6" CONCRETE PAD SHALL BE PROVIDED.

G. HYDRANT ASSEMBLY TO BE INSTALLED PLUMB.

H. HYDRANT SHALL BE PAINTED YELLOW (FED NO. 13655 OSHA/YELLOW, HIGH VISIBILITY)

I. HYDRANT SHALL NOT HAVE MORE THAN ONE (1) EXTENSION TO RAISE TO PROPER HEIGHT.

J. RESTRAIN MAINLINE 10' ON EACH SIDE OF HYDRANT TEE.

K. GUARD POSTS (PER STD. DWG. W–42) REQUIRED IF INSTALLING WHERE ACCESSIBLE TO TRAFFIC WITHIN THE RIGHT–OF–WAY.

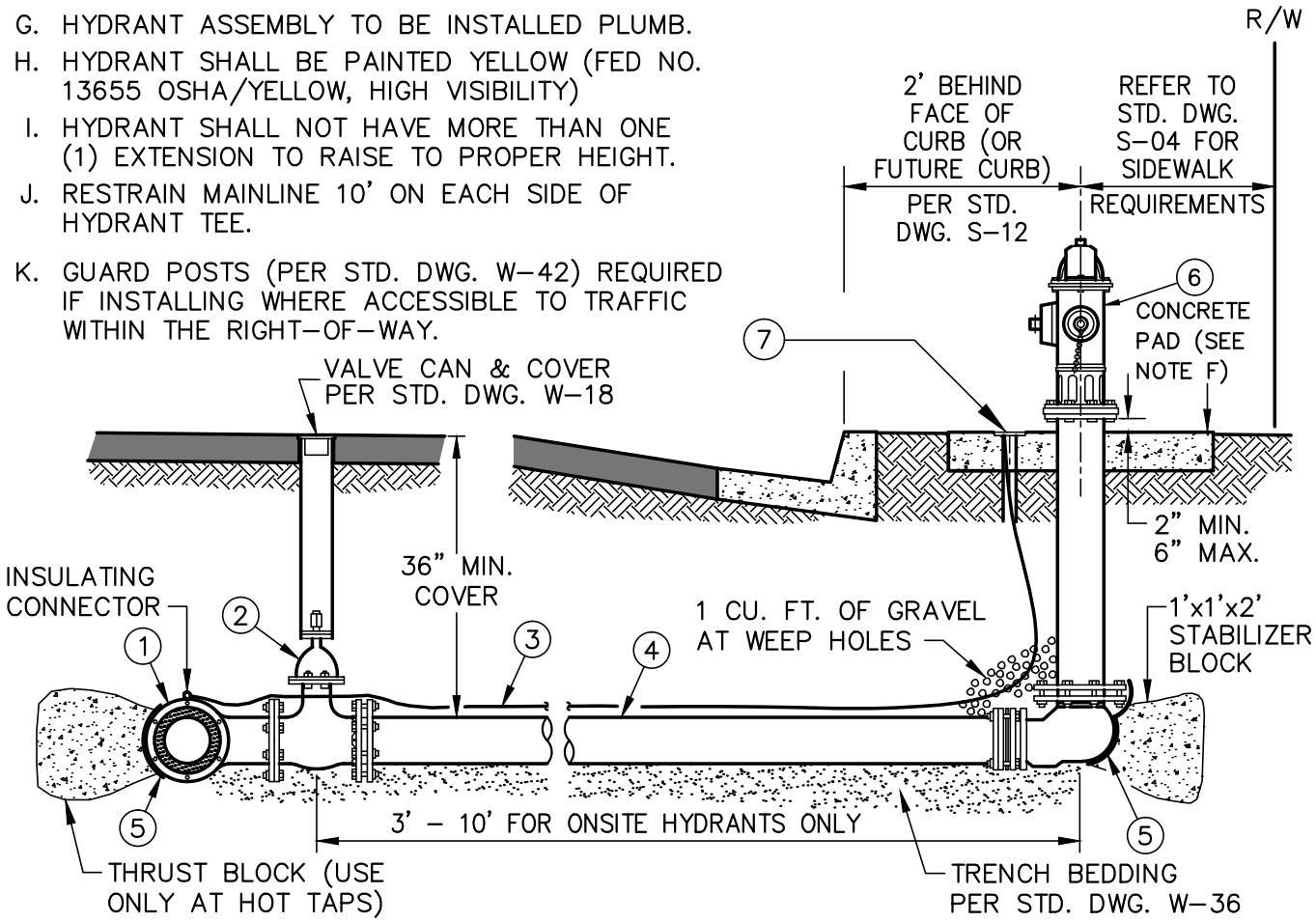

ITEM	DESCRIPTION	APPROVED MATERIAL LIST NUMBER
1	MAIN SIZE x 6" TEE OR TAPPING SLEEVE (SEE STD. DWG. W–21)	6–B / 7–A
2	6" GATE VALVE (FL x MJ)	2–B
3	LOCATING WIRE WITH CONNECTORS	10–A, 10–B
4	6" PIPE	1–A, 1–C
5	BOND BREAKER	13–E
6	FIRE HYDRANT ASSEMBLY	3–A
7	SNAKEPIT MAGNETIZED TRACER BOX W/ 6" TOP FLANGE	10–C

CITY OF VICTORVILLE - ENGINEERING DEPARTMENT

REV.	DATE	BY		
4	5/16/16	STAFF	**STANDARD FIRE HYDRANT**	**W-11**
3	4/6/16	STAFF		
2	12/18/14	STAFF	BRIAN W. GENGLER, CITY ENGINEER	SHEET 1 OF 1

BLANK INTENTIONALLY

CITY OF VICTORVILLE - ENGINEERING DEPARTMENT				
REV.	DATE	BY	BLANK INTENTIONALLY	W-12
4	5/16/16	STAFF		
3	4/6/16	STAFF	BRIAN W. GENGLER, CITY ENGINEER	SHEET 1 OF 1

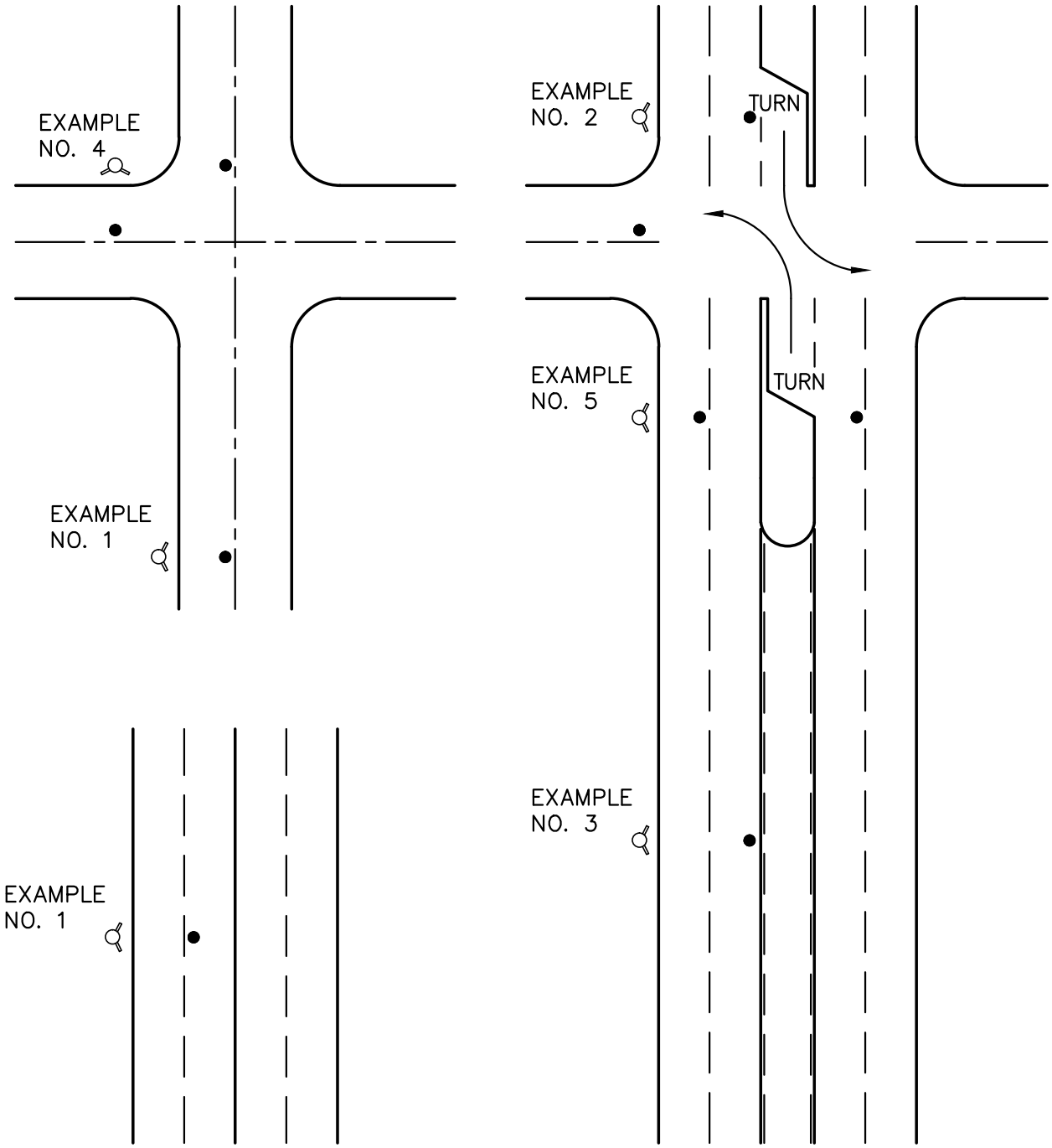

CITY OF VICTORVILLE - ENGINEERING DEPARTMENT				
REV.	DATE	BY	**TYPICAL FIRE HYDRANT PAVEMENT MARKER INSTALLATION**	**W-13**
2	12/18/14	STAFF		
1	8/13/08	STAFF	BRIAN W. GENGLER, CITY ENGINEER	SHEET 1 OF 1

NOTES:

A. PHASE BREAKS NOT SHOWN ON APPROVED WATER IMPROVEMENT PLANS MUST BE AUTHORIZED BY THE ENGINEER PRIOR TO INSTALLATION. AT THE DISCRETION OF THE ENGINEER, STD. DWG. W–15 MAY BE USED IN LIEU OF THE STANDARD SHOWN HEREON.

B. GUARD POSTS (PER STD. DWG. W–42) REQUIRED IF INSTALLING WHERE ACCESSIBLE TO TRAFFIC

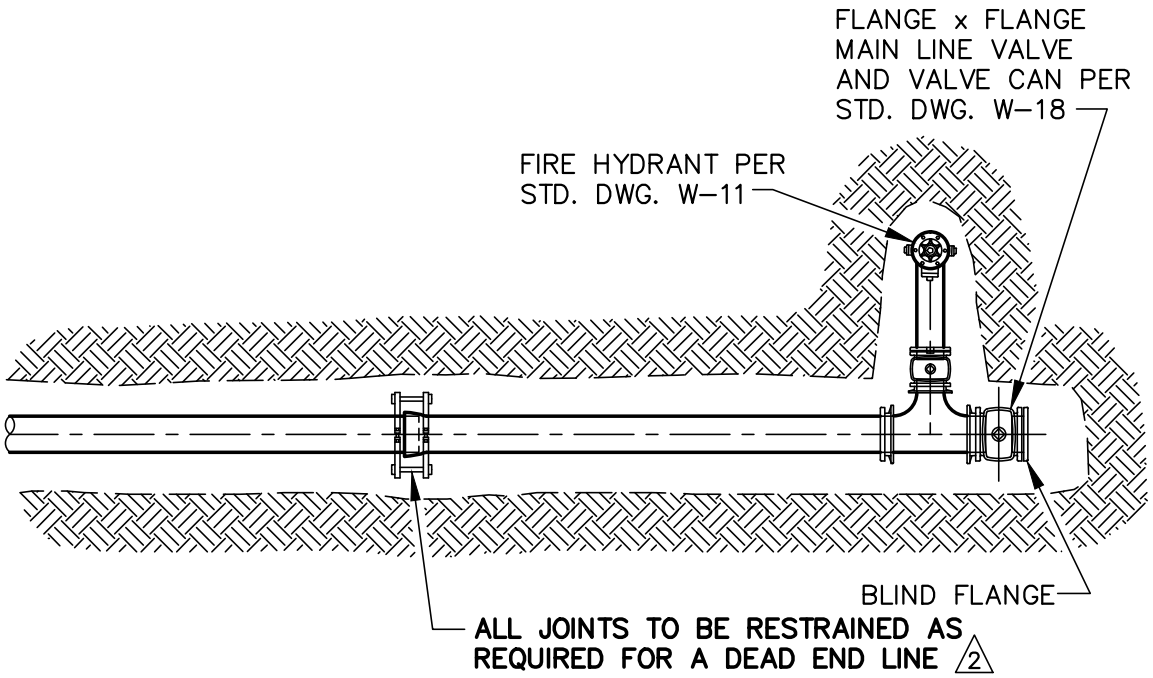

PLAN

ITEM	DESCRIPTION	APPROVED MATERIAL LIST NUMBER
1	JOINT RESTRAINT	5–A, B, C
2	BLIND FLANGE	

CITY OF VICTORVILLE - ENGINEERING DEPARTMENT				
REV.	DATE	BY	**PHASE BREAK END**	**W-14**
2	4/1/15	STAFF		
1	8/13/08	STAFF	BRIAN W. GENGLER, CITY ENGINEER	SHEET 1 OF 1

NOTES:

A. ITEMS 4, 5, 6 AND 7 ARE OPTIONAL AND TO BE PROVIDED BY CONTRACTOR FOR EASE OF TESTING. THESE ITEMS SHALL BE REMOVED PRIOR TO TRENCH BACKFILL.

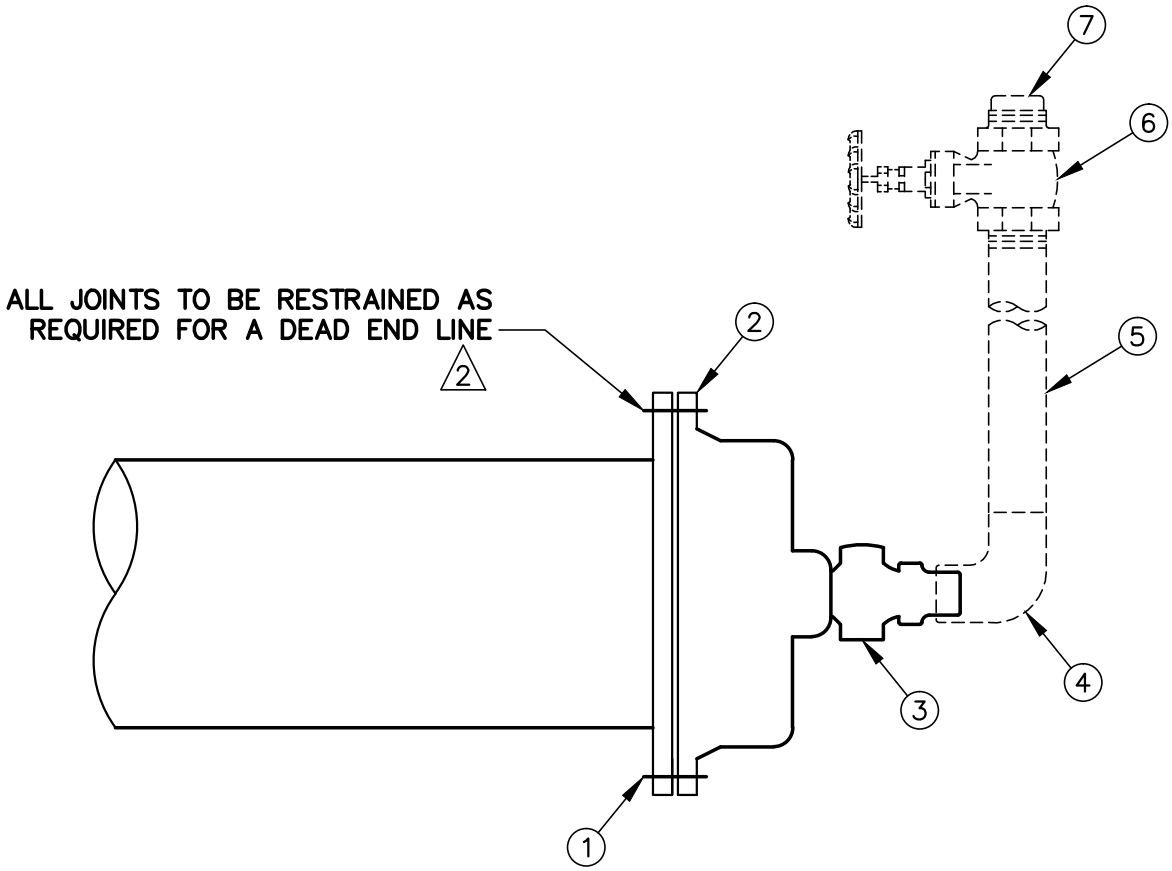

ITEM	DESCRIPTION	APPROVED MATERIAL LIST NUMBER
1	JOINT RESTRAINT	5–A, B, C
2	MJ CAP OR FL x MJ ADAPTOR AND BLIND FLANGE WITH 2" TAP	
3	2" CORP STOP W/ THREADED PLUG	
4	STREET 90° BEND (BRASS)	
5	2" NIPPLE, LENGTH AS NEEDED FOR TEMPORARY BLOW–OFF	
6	2" BALL VALVE WITH HANDWHEEL FOR TEMPORARY BLOW–OFF	
7	2" THREADED PLUG FOR TEMPORARY BLOW–OFF	

CITY OF VICTORVILLE - ENGINEERING DEPARTMENT

REV.	DATE	BY		
2	12/18/14	STAFF	**TEMPORARY BLOW-OFF ASSEMBLY**	**W-15**
1	8/13/08	STAFF	BRIAN W. GENGLER, CITY ENGINEER	SHEET 1 OF 1

NOTES:

A. LOCATING WIRE TO RUN FROM MAIN, (TIED IN WITH INSULATING CONNECTORS) ALONG LATERAL AND CONNECTED TO SNAKEPIT MAGNETIZED TRACER BOX.

B. WHERE NO SIDEWALK IS TO BE CONSTRUCTED, A 3'x3'x6" CONCRETE PAD SHALL BE PROVIDED.

C. BLOW-OFF ASSEMBLY TO BE INSTALLED PLUMB; LATERAL TO BE INSTALLED LEVEL AND STRAIGHT, (NO DEFLECTION AT JOINTS ALLOWED).

D. EXPOSED COMPONENTS SHALL BE PAINTED WHITE.

E. **ALL JOINTS TO BE RESTRAINED.** (SEE ITEM 5 OF APPROVED MATERIALS LIST)

F. GUARD POSTS (PER STD. DWG. W-42) REQUIRED IF INSTALLING WHERE ACCESSIBLE TO TRAFFIC WITHIN THE RIGHT-OF-WAY.

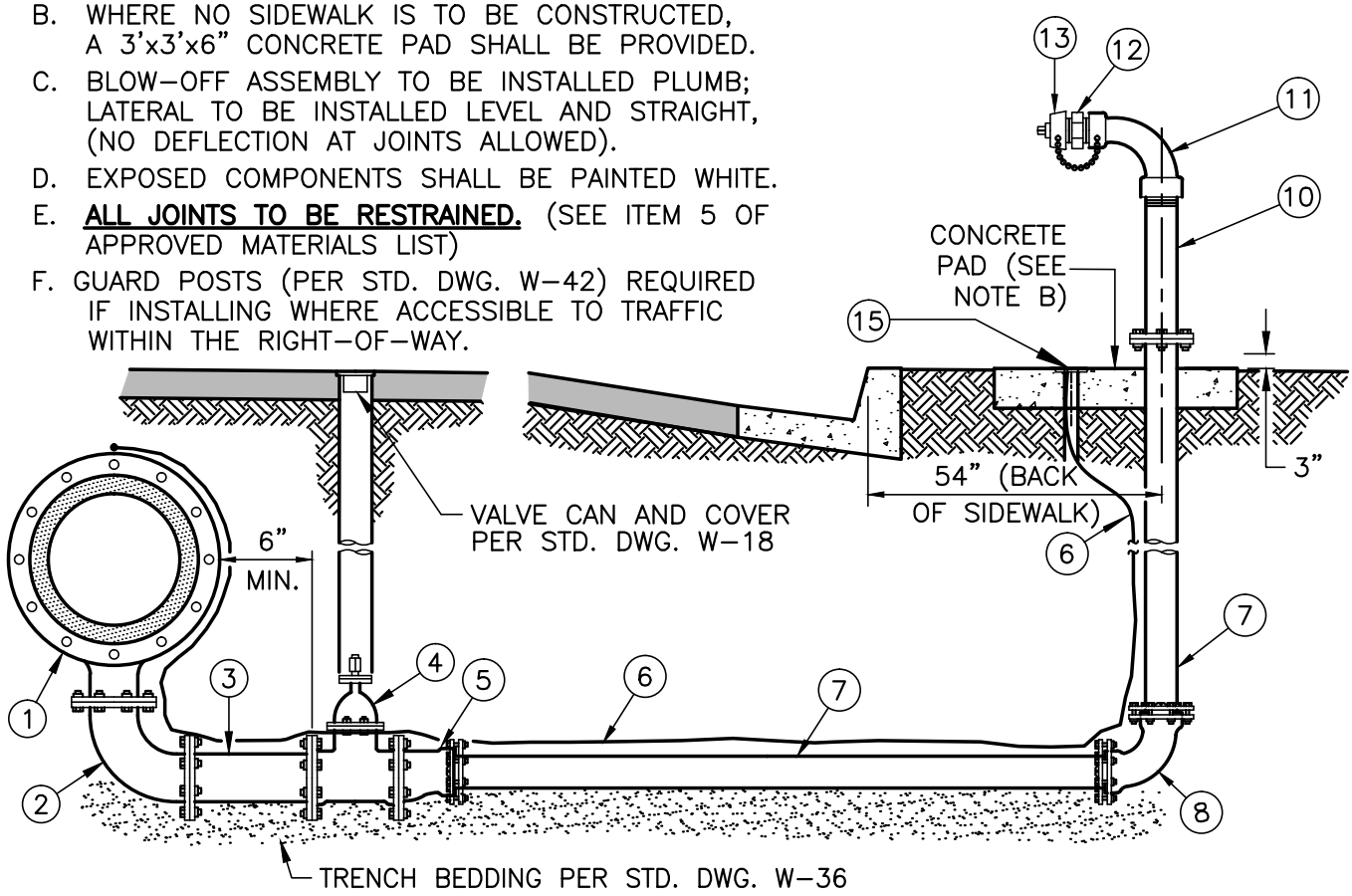

ITEM	DESCRIPTION	APPROVED MATERIAL LIST NUMBER
1	MAINSIZE x 6" TEE	6-B
2	6" 90° BEND (FL)	6-C
3	6" SPOOL (FL), LENGTH AS NEEDED	6-E
4	6" GATE VALVE (FLG'D)	2-B
5	6" x 4" ECCENTRIC REDUCER WITH TOP LEVEL (FL x MJ)	6-C
6	LOCATING WIRE WITH CONNECTORS (IF REQUIRED BY INSPECTOR)	10-A, 10-B
7	4" PIPE, LENGTH AS NEEDED (PE x PE)	1-A, 1-C
8	4" 90° BEND (MJ x MJ)	6-C
9	NOT REQUIRED	
10	4" #10 BLACK IRON, 18" LONG (MIPT x FL)	1-G
11	4" x 2"-1/2", 90° REDUCING BEND (FIPT x FIPT)	6-C
12	2-1/2" MIPT x 2-1/2" NST (HOSE COUPLING THREAD)	6-C, 6-D
13	2-1/2" HOSE NOZZLE CAP, PLASTIC WITH CHAIN	6-C, 6-D
14	NOT REQUIRED	
15	SNAKEPIT MAGNETIZED TRACER BOX W/ 6" TOP FLANGE	10-C

CITY OF VICTORVILLE - ENGINEERING DEPARTMENT

REV.	DATE	BY		
3	5/16/16	STAFF	**4" BLOW-OFF ASSEMBLY**	**W-16**
2	12/18/14	STAFF		
1	10/20/08	STAFF	BRIAN W. GENGLER, CITY ENGINEER	SHEET 1 OF 1

NOTES:

A. LOCATING WIRE TO RUN FROM MAIN, (TIED IN WITH INSULATING CONNECTORS) ALONG LATERAL AND CONNECTED TO SNAKEPIT MAGNETIZED TRACER BOX.

B. WHERE NO SIDEWALK IS TO BE CONSTRUCTED, A 3'x3'x6" CONCRETE PAD SHALL BE PROVIDED.

C. BLOW-OFF ASSEMBLY TO BE INSTALLED PLUMB; LATERAL TO BE INSTALLED LEVEL AND STRAIGHT, (NO DEFLECTION AT JOINTS ALLOWED).

D. EXPOSED COMPONENTS SHALL BE PAINTED WHITE.

E. **ALL JOINTS TO BE RESTRAINED.** (SEE ITEM 5 OF APPROVED MATERIALS LIST).

F. GUARD POSTS (PER STD. DWG. W-42) REQUIRED IF INSTALLING WHERE ACCESSIBLE TO TRAFFIC WITHIN THE RIGHT-OF-WAY.

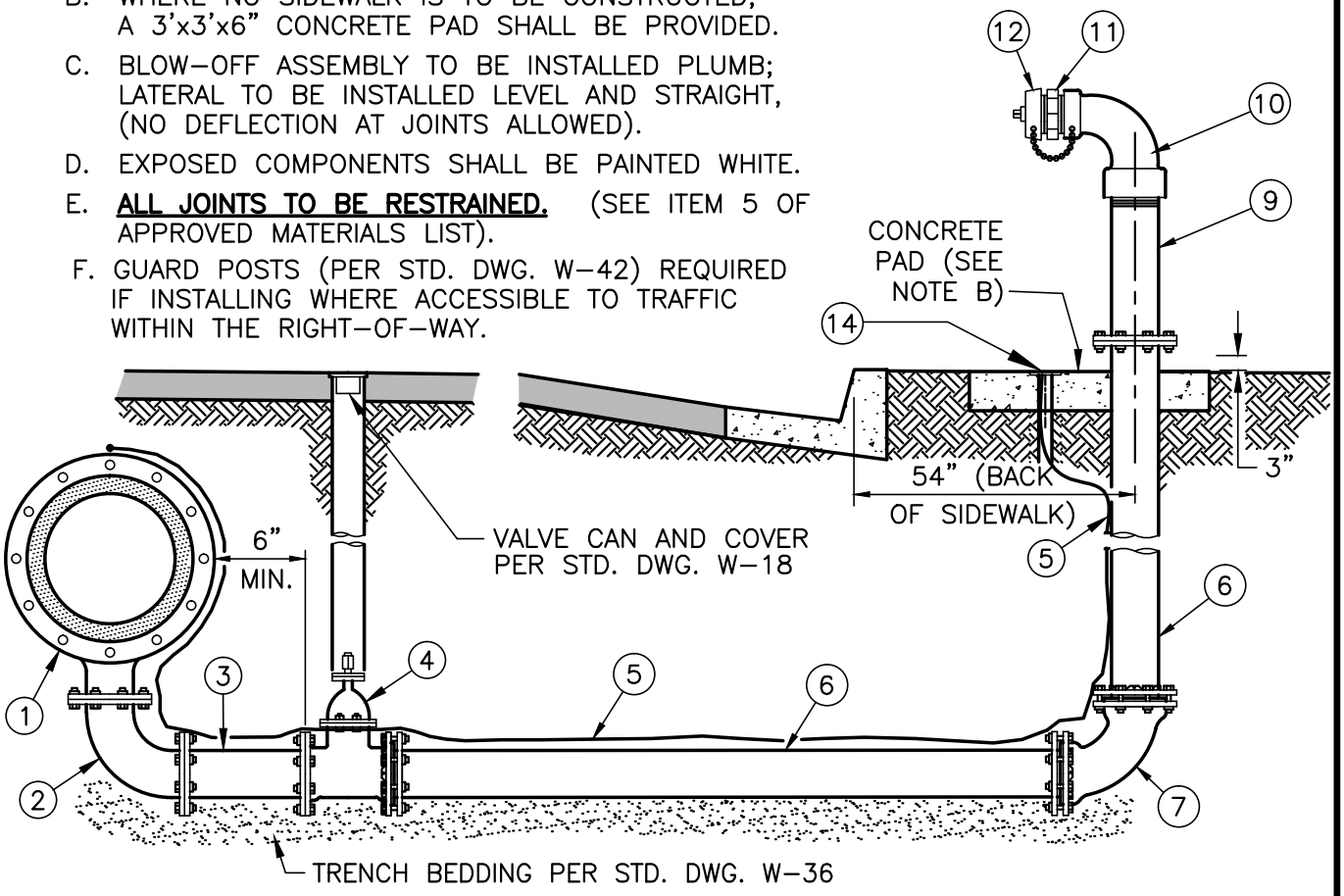

ITEM	DESCRIPTION	APPROVED MATERIAL LIST NUMBER
1	MAINSIZE x 6" TEE	6-B
2	6" 90° BEND (FL)	6-C
3	6" SPOOL (FL), LENGTH AS NEEDED	6-E
4	6" GATE VALVE (FL X MJ)	2-B
5	LOCATING WIRE WITH CONNECTORS (IF REQUIRED BY INSPECTOR)	10-A, 10-B
6	6" PIPE (PE x PE), LENGTH AS NEEDED	1-C
7	6" 90° BEND (MJ x MJ)	6-C
8	NOT USED	
9	6" BLACK IRON, 18" LONG (MIPT x FL)	1-G
10	6" x 4", 90° REDUCING BEND (FIPT x FIPT)	6-C
11	4" MIPT x 4" NST (HOSE COUPLING THREAD)	6-C, 6-D
12	4" HOSE NOZZLE CAP, PLASTIC WITH CHAIN	6-C, 6-D
13	NOT REQUIRED	
14	SNAKEPIT MAGNETIZED TRACER BOX W/ 6" TOP FLANGE	10-C

CITY OF VICTORVILLE - ENGINEERING DEPARTMENT

REV.	DATE	BY		
3	5/16/16	STAFF	**6" BLOW-OFF ASSEMBLY**	**W-17**
2	12/18/14	STAFF		
1	10/20/08	STAFF	BRIAN W. GENGLER, CITY ENGINEER	SHEET 1 OF 1

NOTES:

△2 A. VALVE CAN ASSEMBLY SHALL NOT BE LOCATED IN A GUTTER OR CROSS GUTTER.

B. WHERE DEPTH TO VALVE OPERATOR IS OVER 6 FEET, AN OPERATOR EXTENSION PER STD. DWG. W-19 WILL BE REQUIRED.

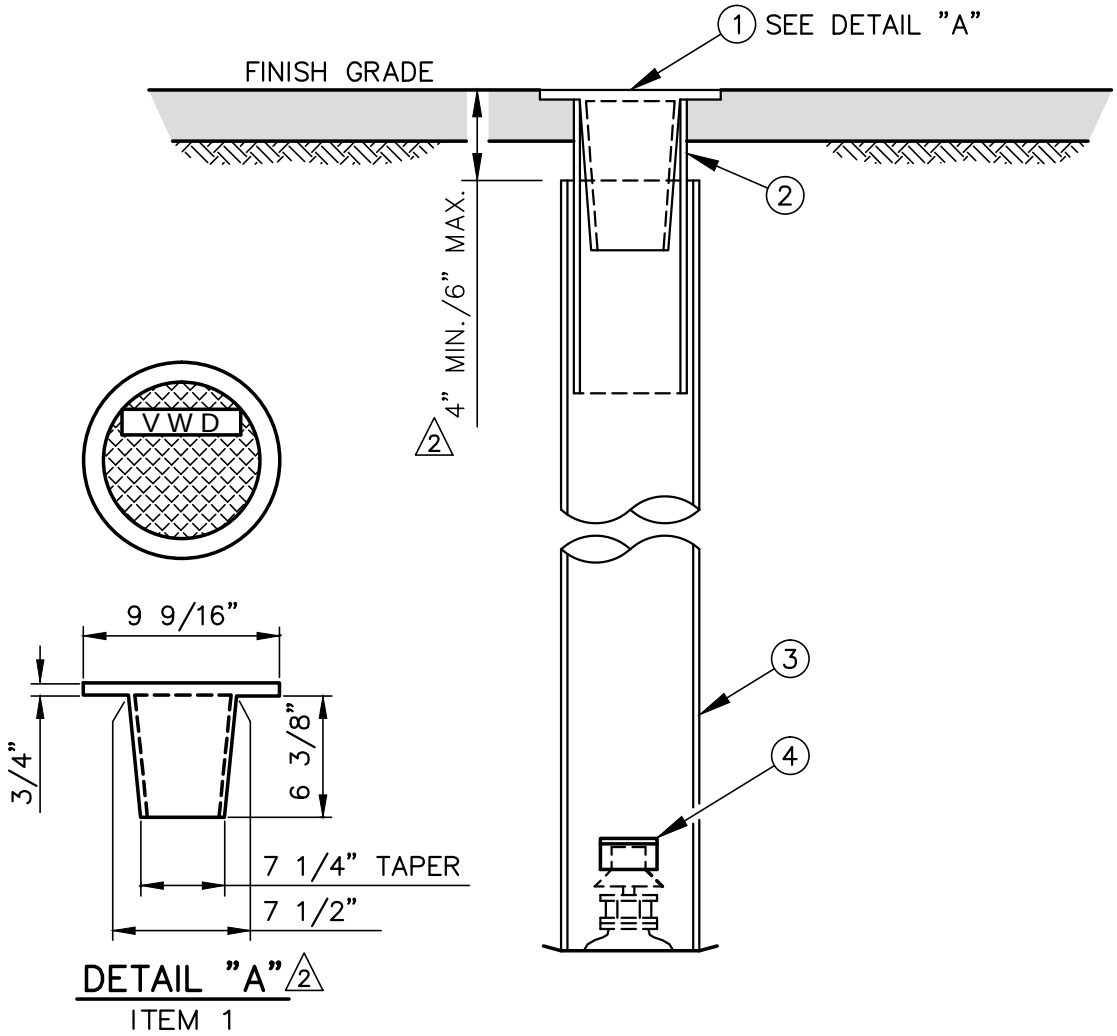

ITEM	DESCRIPTION	APPROVED MATERIAL LIST NUMBER
1	VALVE COVER – WITH 1" 'VWD' CAST THEREON FOR WATER LINE	13–F
2	VALVE SLIP CAN – 18" LONG (ADJUST TO GRADE, ONE ONLY)	13–G
3	VALVE CAN TUBE – 8" C900 CL305 OR DR14, (LENGTH VARIES) △2	13–H
4	VALVE	2–A, 2–B

CITY OF VICTORVILLE - ENGINEERING DEPARTMENT

REV.	DATE	BY		
2	12/18/14	STAFF	**VALVE CAN ASSEMBLY**	**W-18**
1	8/13/08	STAFF	BRIAN W. GENGLER, CITY ENGINEER	SHEET 1 OF 1

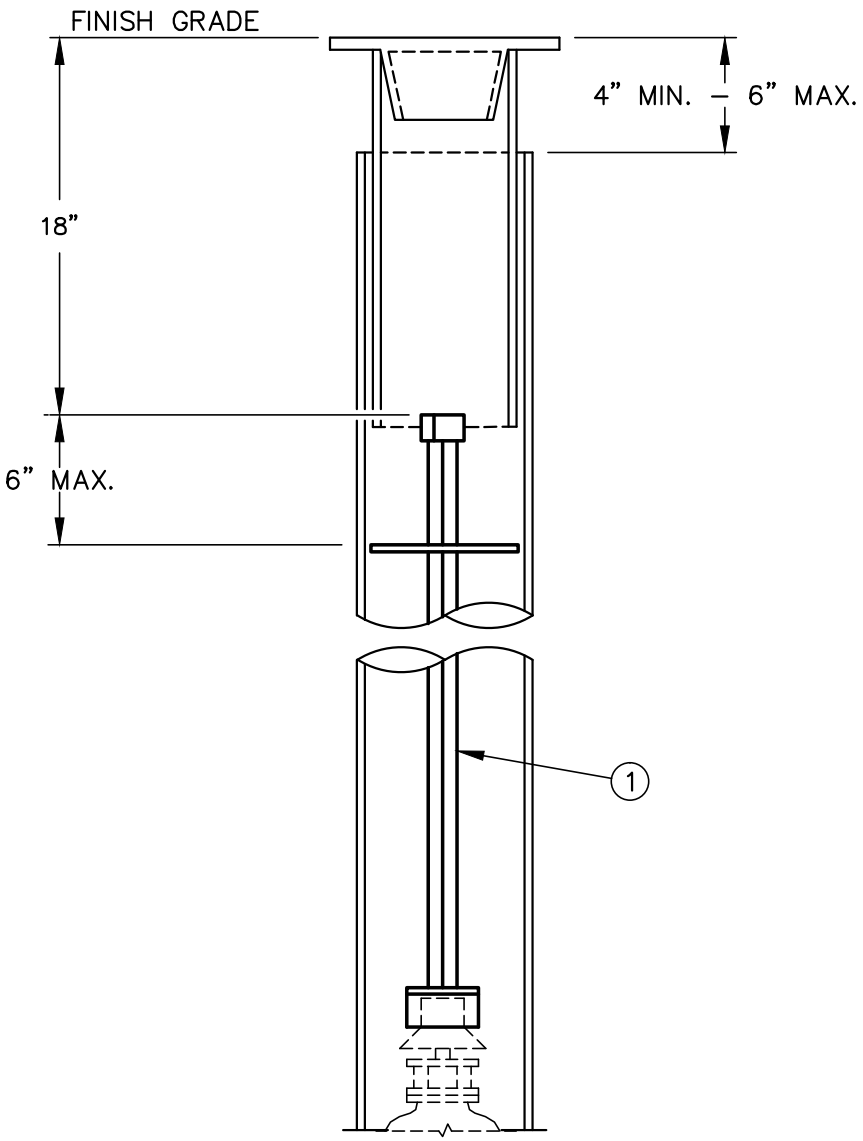

NOTES:

A. EXTEND 2" NUT TO WITHIN 18" OF FINISH GRADE WHEN VALVE NUT IS DEEPER THAN 6 FEET FROM FINISHED GRADE.

2 B. WHERE LENGTH OF EXTENSION IS OVER 8 FEET, A SECOND PLATE SHALL BE INSTALLED IN THE CENTER OF THE EXTENSION STEM.

C. EXTENSION STEM SHALL BE OF SOLID DESIGN, NO PINNED COUPLINGS PERMITTED.

D. EXTENSION STEMS SHALL NOT BE ATTACHED TO THE OPERATING NUT OF THE VALVE.

ITEM	DESCRIPTION	APPROVED MATERIAL LIST NUMBER
1	VALVE STEM EXTENSION	13–1

CITY OF VICTORVILLE - ENGINEERING DEPARTMENT				
REV.	DATE	BY	VALVE OPERATOR EXTENSION	W-19
2	12/18/14	CLS		
1	8/13/08	STAFF	BRIAN W. GENGLER, CITY ENGINEER	SHEET 1 OF 1

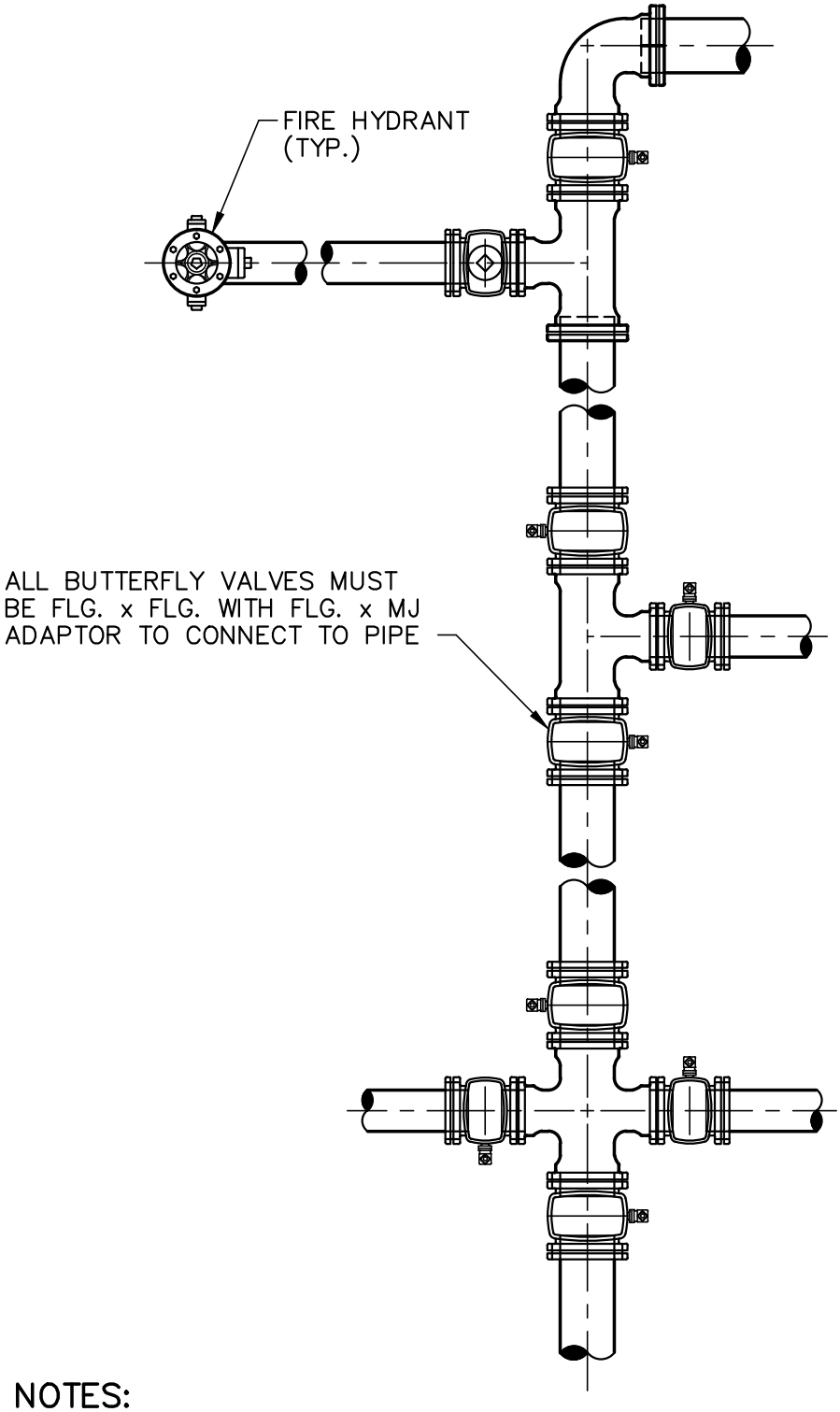

NOTES:

A. ALL VALVES MUST BE FLANGED TO AN ADJACENT FITTING, INCLUDING AT PHASE BREAKS.

B. SEE STANDARD DRAWING W–18 FOR VALVE CAN REQUIREMENTS.

C. IF STANDING ON TEE OR CROSS LOOKING TOWARD MAIN, VALVE OPERATOR SHALL BE ON LEFT SIDE OF MAIN.

CITY OF VICTORVILLE - ENGINEERING DEPARTMENT				
REV.	DATE	BY	**TYPICAL BUTTERFLY VALVE OPERATOR LOCATIONS**	**W-20**
2	12/18/14	STAFF		
1	10/16/08	STAFF	BRIAN W. GENGLER, CITY ENGINEER	SHEET 1 OF 1

NOTES:

A. NO FULL SIZE TAPS ARE PERMITTED ON CLASS 150 PVC C-900. 2

B. REFER TO "GENERAL PIPING SYSTEM AND APPURTENANCES" SECTION OF THE SPECIFICATIONS. 2

C. VALVE TO BE INSTALLED MUST BE BOLTED ON. 2

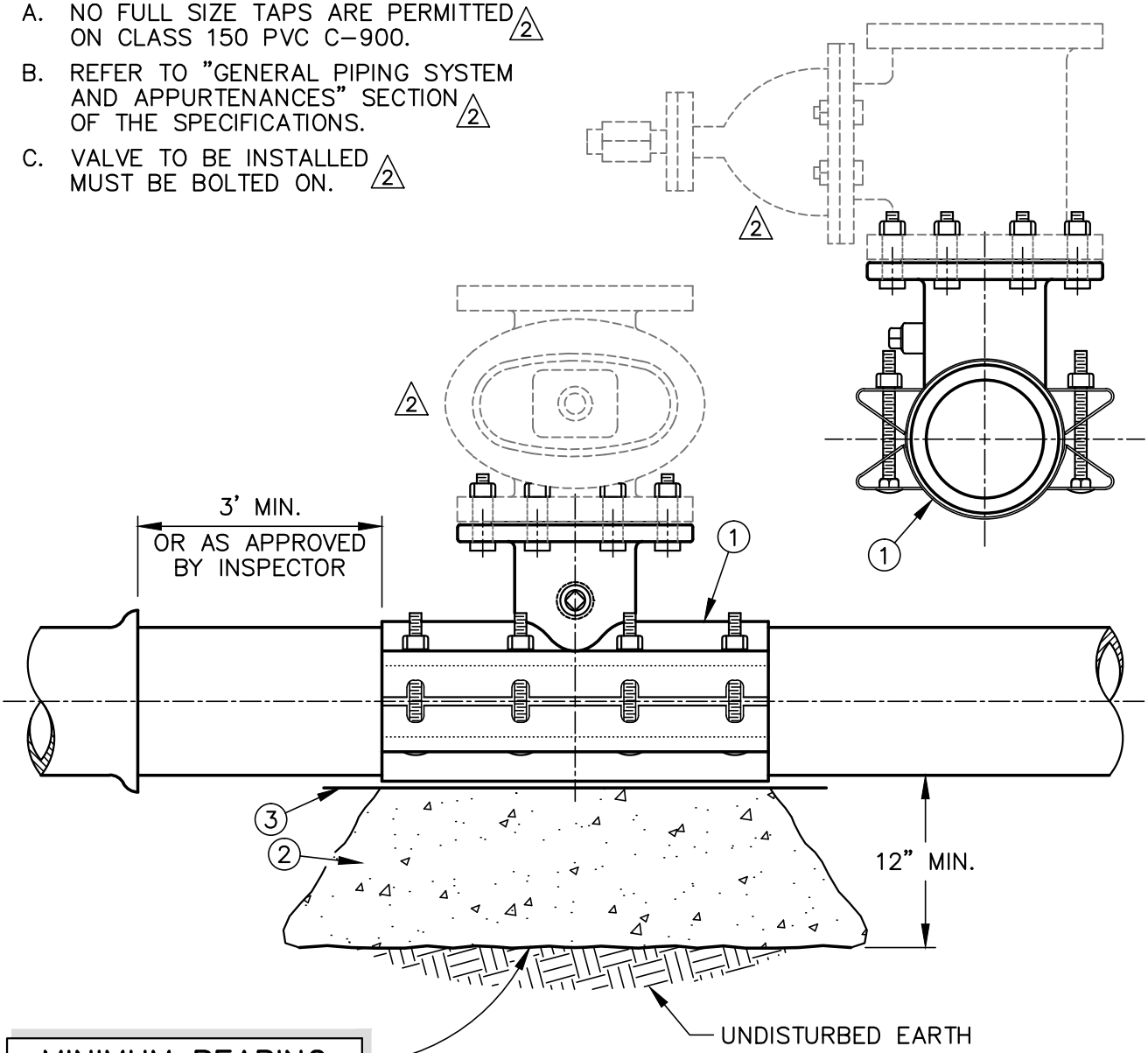

MINIMUM BEARING SURFACE AREA	
PIPE SIZE	TEE
6"	3.5 SQ. FT.
8"	5.5 SQ. FT.
12"	12.0 SQ. FT.

ITEM	DESCRIPTION	APPROVED MATERIAL LIST NUMBER
1	TAPPING SLEEVE	7-A
2	CONCRETE THRUST BLOCK	
3	BOND BREAKER	13-E

CITY OF VICTORVILLE - ENGINEERING DEPARTMENT				
REV.	DATE	BY	HOT TAP DETAIL AC, PVC, DIP	W-21
2	4/1/14	STAFF		
1	10/16/08	STAFF	BRIAN W. GENGLER, CITY ENGINEER	SHEET 1 OF 1

NOTES:

A. USE COLLAR REINFORCEMENT WHEN OUTLET TO MAIN RATIO IS 50% OR LESS.

B. USE WRAPPER REINFORCEMENT WHEN OUTLET TO MAIN RATIO IS GREATER THAN 50%.

C. REINFORCEMENT DESIGN IS BASED ON THE STEEL AREA REMOVED FROM THE MAIN LINE AND THE OPERATING PRESSURE OF THE SYSTEM.

D. JOB SPECIFICATIONS/DETAILS FOR REINFORCEMENT SHALL GOVERN IF IN EXCESS OF NOTES A, B AND C ABOVE.

E. OUTLET NOZZLE SHOULD BE POSITIONED AND WELDED ON TO MAIN PRIOR TO WELDING ON THE REQUIRED REINFORCEMENT (COLLAR–WRAPPER).

F. FLANGE SHALL BE ATTACHED WITH BOLT HOLES CENTERED ABOUT THE VERTICAL AXIS OF THE PIPE UNLESS OTHERWISE NOTED.

G. ON CEMENT COATED STEEL PIPE, RECOAT PIPE ACCORDING TO MANUFACTURERS RECOMMENDATIONS.

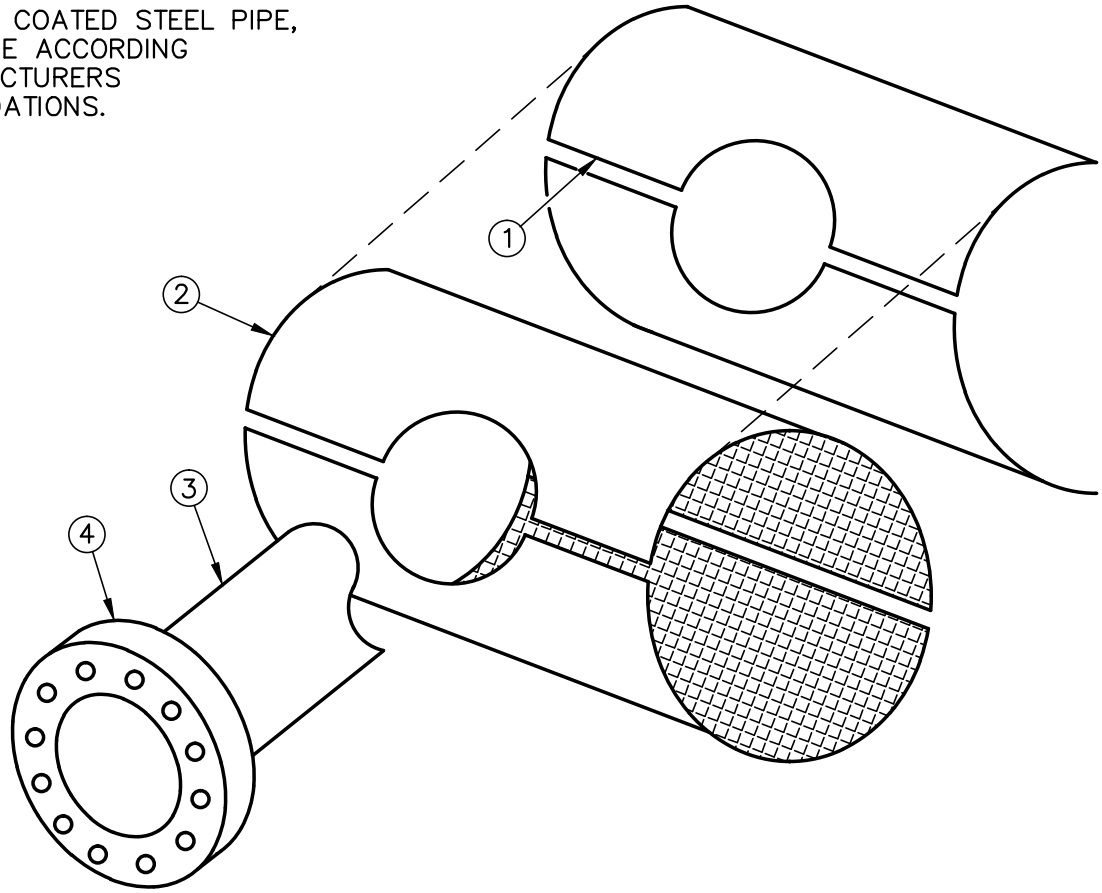

ITEM	DESCRIPTION	APPROVED MATERIAL LIST NUMBER
1	COLLAR REINFORCEMENT	7–C
2	WRAPPER REINFORCEMENT (FULL WRAP)	7–C
3	OUTLET NOZZLE	7–D
4	FLANGE	7–E

CITY OF VICTORVILLE - ENGINEERING DEPARTMENT

REV.	DATE	BY	TAPPING OUTLET - FOR STEEL PIPE	W-22
1	8/14/08	STAFF	BRIAN W. GENGLER, CITY ENGINEER	SHEET 1 OF 1

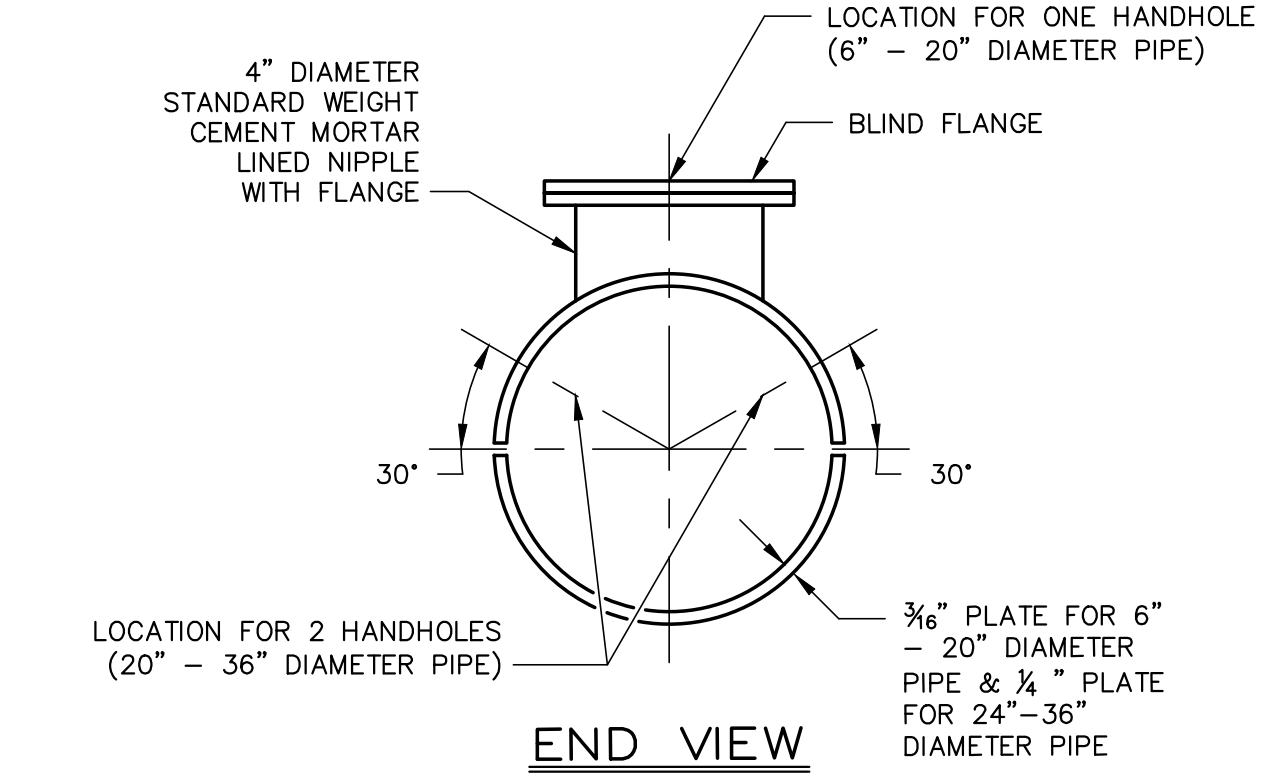

END VIEW

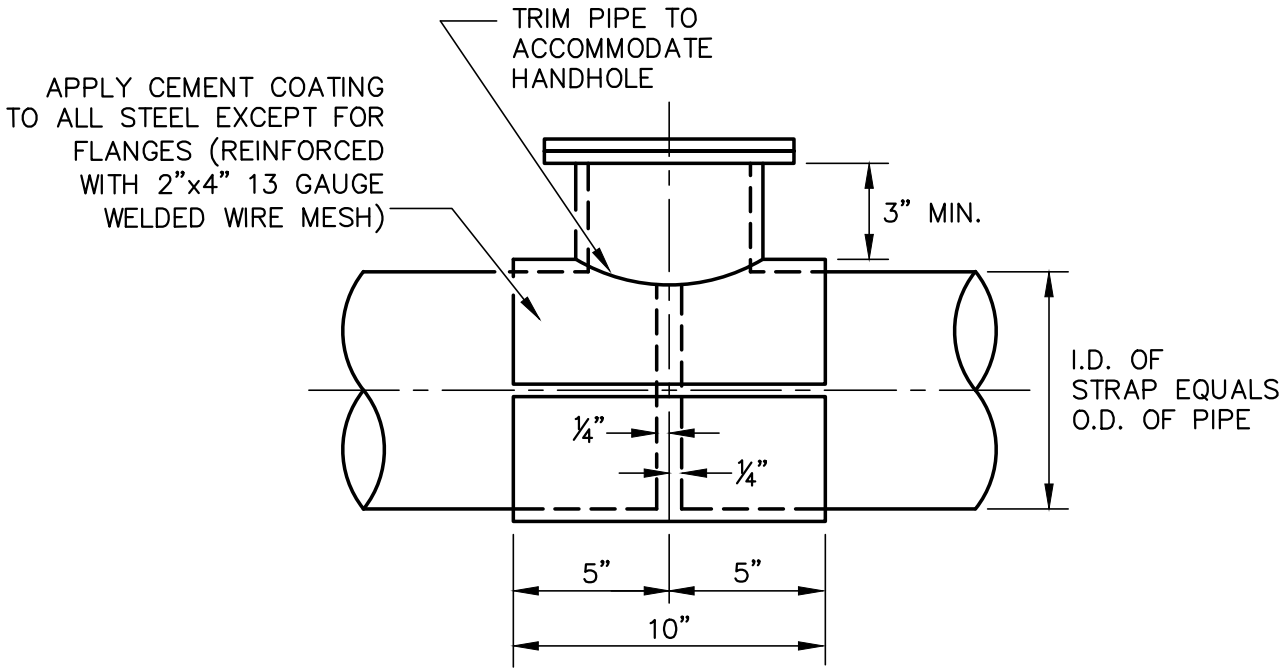

SIDE VIEW

NOTE:

A. ALL JOINTS SHALL BE FULLY WELDED

B. FLANGE BOLTS SHALL BE SELECTED FROM THE APPROVED MATERIALS LIST.

CITY OF VICTORVILLE - ENGINEERING DEPARTMENT				
REV.	DATE	BY	**WELDED STEEL PIPE BUTT-JOINT WITH HANDHOLE**	**W-23**
2	12/18/14	STAFF		
1	8/14/08	STAFF	BRIAN W. GENGLER, CITY ENGINEER	SHEET 1 OF 1

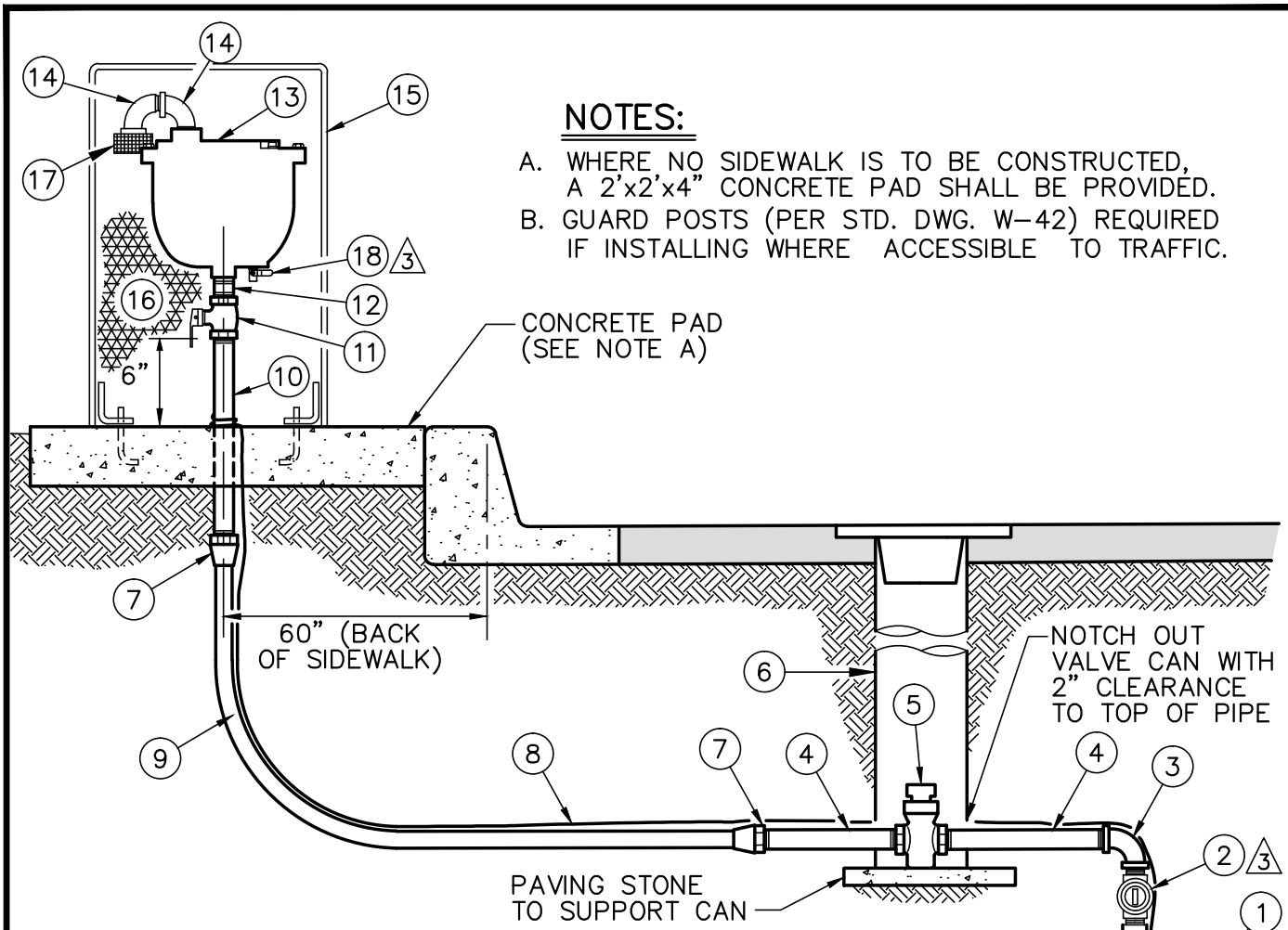

NOTES:

A. WHERE NO SIDEWALK IS TO BE CONSTRUCTED, A 2'x2'x4" CONCRETE PAD SHALL BE PROVIDED.

B. GUARD POSTS (PER STD. DWG. W–42) REQUIRED IF INSTALLING WHERE ACCESSIBLE TO TRAFFIC.

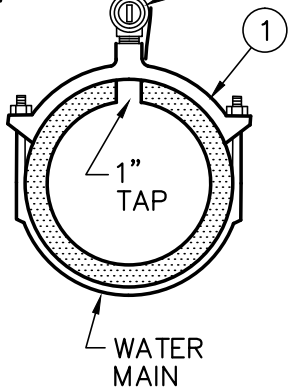

ITEM	DESCRIPTION	APPROVED MATERIAL LIST NUMBER
1	"MAIN SIZE" x 1" SERVICE SADDLE	7–B
2	1" CORP. STOP (MIPT x MIPT) 3	2–K
3	1" 90° BEND, BRONZE, (FIPT x FIPT)	6–D
4	(2) 1" x 6" NIPPLE, BRASS, (MIPT x MIPT)	6–D
5	2" GATE VALVE, 2" OP NUT W/ 2"x1" BUSHINGS	2–B
6	VALVE CAN SET (SEE STD. DWG. W–18)	13–F,G,H
7	(2) 1" COMPRESSION FITTING	6–D
8	LOCATING WIRE WITH CONNECTORS (IF REQUIRED) 2	10–A, 10–B
9	1" TUBING (LENGTH VARIES, GRADES TOWARD MAIN)	1–D
10	1" x 18" NIPPLE, BRASS, (MIPT x MIPT)	6–D
11	1" BALL VALVE W/ HANDLE, BRONZE (FIPT x FIPT)	2–I
12	1" x CLOSE NIPPLE, BRASS, (MIPT x MIPT)	6–D
13	1" AIR AND VACUUM RELEASE VALVE, (FIPT)	11–A
14	(2) 1" 90° PVC SCH. 80 STREET BENDS	6–F
15	AIR–VAC ENCLOSURE (SEE STD. DWG. W–27)	11–D
16	INSULATING BAG	11–G
17	SCREENED CAP	11–H
18	1/2" BALL VALVE (FIPT X FIPT) W/ NIPPLE 3	2–I

CITY OF VICTORVILLE - ENGINEERING DEPARTMENT

REV.	DATE	BY
3	4/5/16	STAFF
2	12/18/14	STAFF
1	10/20/08	STAFF

STANDARD 1" AIR AND VACUUM RELEASE VALVE ASSEMBLY

BRIAN W. GENGLER, CITY ENGINEER

W-24

SHEET 1 OF 1

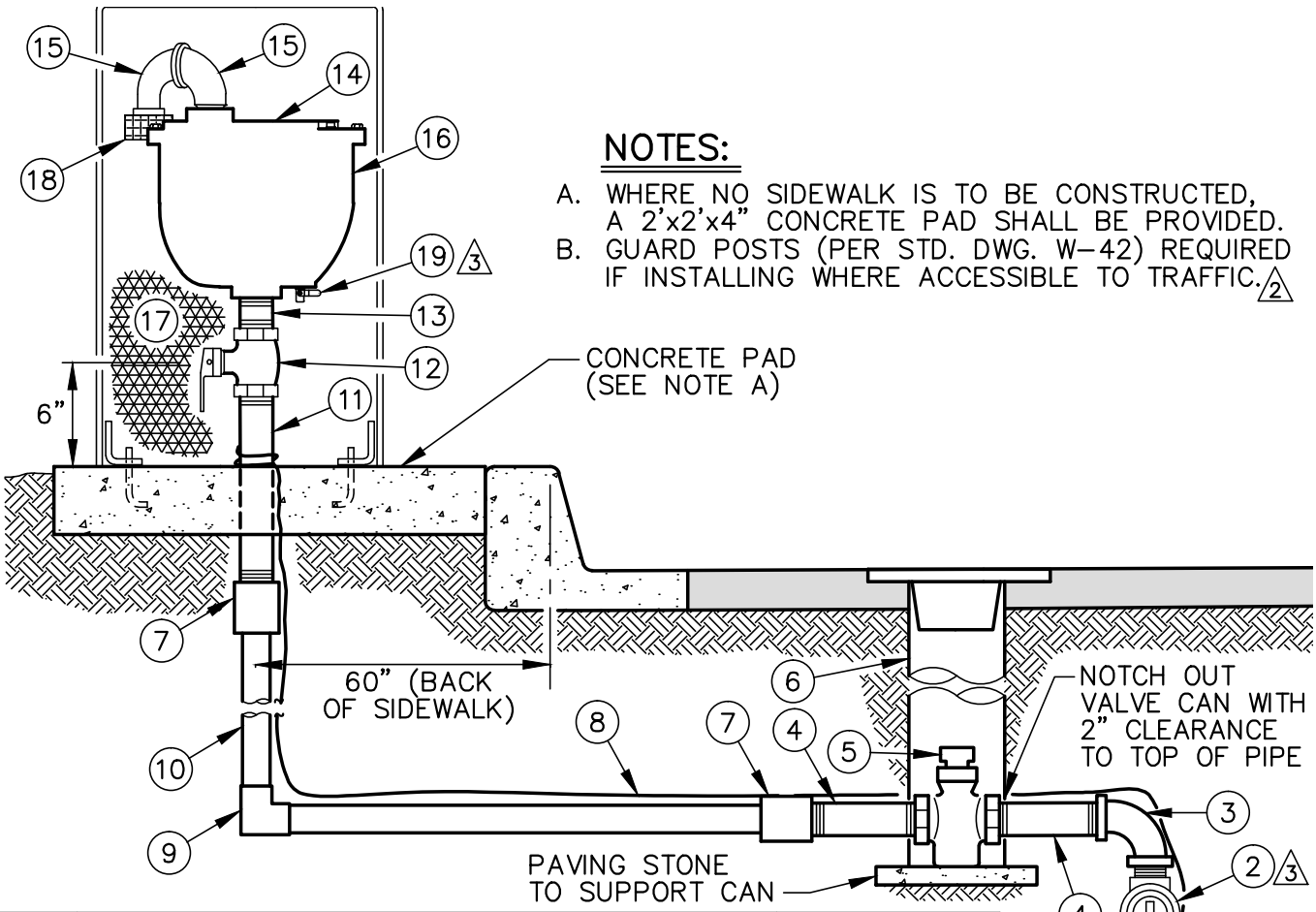

NOTES:

A. WHERE NO SIDEWALK IS TO BE CONSTRUCTED, A 2'x2'x4" CONCRETE PAD SHALL BE PROVIDED.

B. GUARD POSTS (PER STD. DWG. W–42) REQUIRED IF INSTALLING WHERE ACCESSIBLE TO TRAFFIC. 2

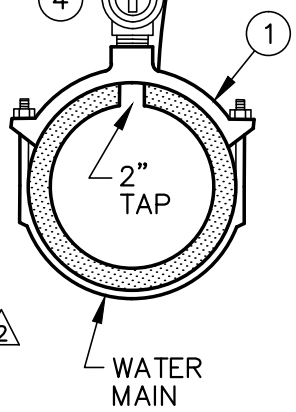

ITEM	DESCRIPTION	APPROVED MATERIAL LIST NUMBER
1	"MAIN SIZE" x 2" SERVICE SADDLE	7–B
2	2" CORP. STOP (MIPT x MIPT) 3	2–L
3	2" 90° BEND, BRONZE, (FIPT x FIPT)	6–D
4	(2) 2" x 6" NIPPLE, BRASS, (MIPT x MIPT)	6–D
5	2" GATE VALVE, 2" OPERATING NUT	2–B
6	VALVE CAN SET (SEE STD. DWG. W–18)	13–F,G,H
7	2" SOLDER x FIPT FITTING	6–D
8	LOCATING WIRE W/ CONNECTORS (IF REQUIRED)	10–A, 10–B 2
9	2" – 90° SOLDER FITTING	6–D
10	2" TUBING (LENGTH VARIES, GRADES TOWARD MAIN)	1–D
11	2" x 18" NIPPLE, BRASS, (MIPT x MIPT)	6–D
12	2" BALL VALVE W/ HANDLE, BRONZE (FIPT x FIPT)	2–I
13	2" x CLOSE NIPPLE, BRASS, (MIPT x MIPT)	6–D
14	2" AIR AND VACUUM RELEASE VALVE, (FIPT)	11–B
15	(2) 2" 90° PVC SCH. 80 STREET BEND	6–F
16	AIR–VAC ENCLOSURE (SEE STD. DWG. W–27)	11–E
17	INSULATING BAG	11–G
18	SCREENED CAP	11–H
19	1/2" BALL VALVE (FIPT x FIPT) W/ NIPPLE 3	2–I

CITY OF VICTORVILLE - ENGINEERING DEPARTMENT

REV.	DATE	BY	STANDARD 2" AIR AND VACUUM RELEASE VALVE ASSEMBLY	W-25
3	4/5/16	STAFF		
2	12/18/14	STAFF		
1	10/20/08	STAFF	BRIAN W. GENGLER, CITY ENGINEER	SHEET 1 OF 1

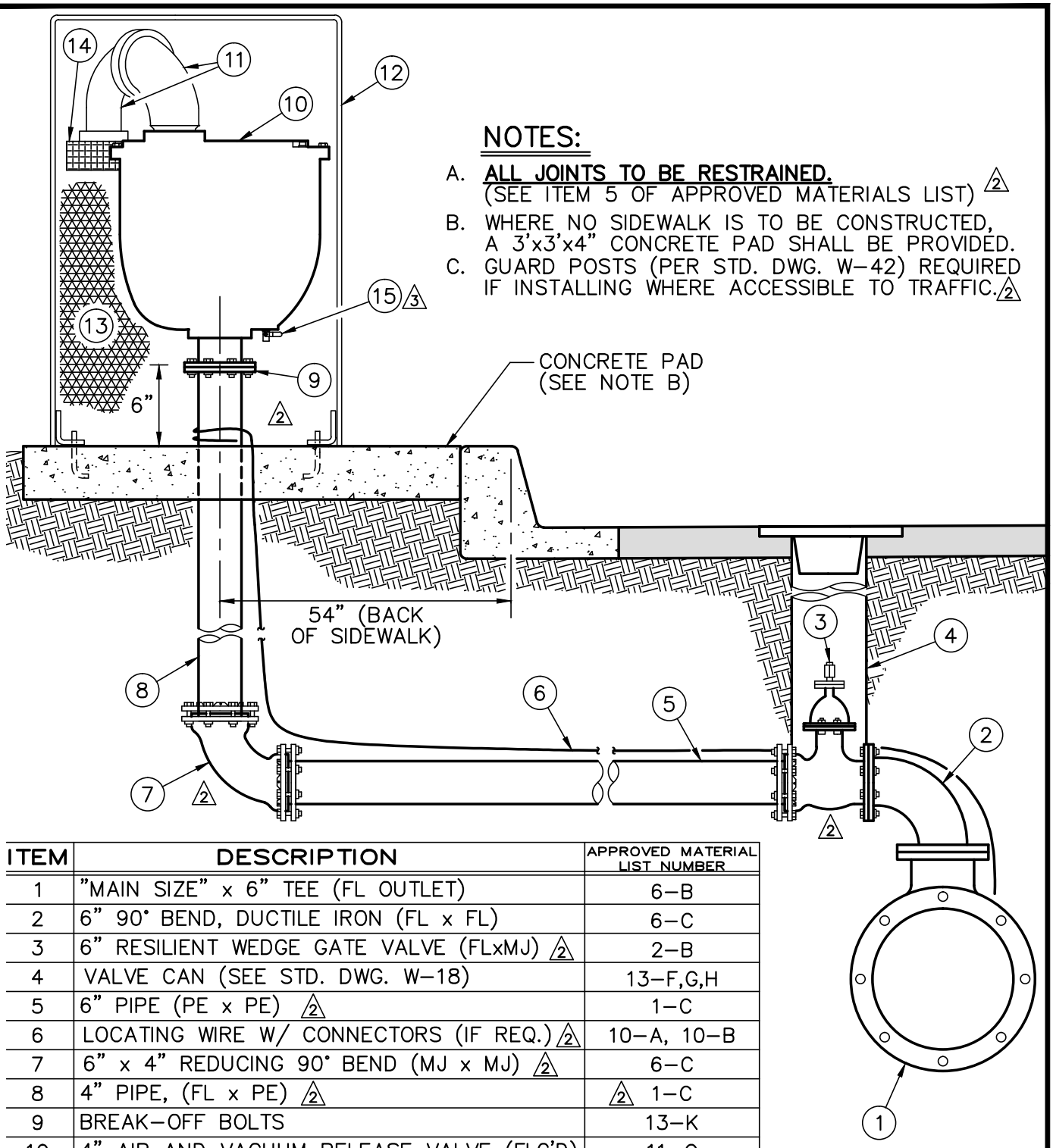

NOTES:

A. **ALL JOINTS TO BE RESTRAINED.** (SEE ITEM 5 OF APPROVED MATERIALS LIST) 2

B. WHERE NO SIDEWALK IS TO BE CONSTRUCTED, A 3'x3'x4" CONCRETE PAD SHALL BE PROVIDED.

C. GUARD POSTS (PER STD. DWG. W-42) REQUIRED IF INSTALLING WHERE ACCESSIBLE TO TRAFFIC. 2

ITEM	DESCRIPTION	APPROVED MATERIAL LIST NUMBER
1	"MAIN SIZE" x 6" TEE (FL OUTLET)	6-B
2	6" 90° BEND, DUCTILE IRON (FL x FL)	6-C
3	6" RESILIENT WEDGE GATE VALVE (FLxMJ) 2	2-B
4	VALVE CAN (SEE STD. DWG. W-18)	13-F,G,H
5	6" PIPE (PE x PE) 2	1-C
6	LOCATING WIRE W/ CONNECTORS (IF REQ.) 2	10-A, 10-B
7	6" x 4" REDUCING 90° BEND (MJ x MJ) 2	6-C
8	4" PIPE, (FL x PE) 2	2 1-C
9	BREAK-OFF BOLTS	13-K
10	4" AIR AND VACUUM RELEASE VALVE (FLG'D)	11-C
11	(2) 2" 90° PVC SCH. 80 STREET BEND	6-F
12	AIR-VAC ENCLOSURE (SEE STD. DWG. W-27)	11-F
13	INSULATING BAG	11-G
14	SCREENED CAP	11-H
15	1/2" BALL VALVE (FIP x FIP) W/ NIPPLE 3	2-I

CITY OF VICTORVILLE - ENGINEERING DEPARTMENT

REV.	DATE	BY		
3	4/5/16	STAFF	**STANDARD 4" AIR AND VACUUM RELEASE VALVE ASSEMBLY**	**W-26**
2	12/18/14	CLS/FE		
1	10/20/08	STAFF	BRIAN W. GENGLER, CITY ENGINEER	SHEET 1 OF 1

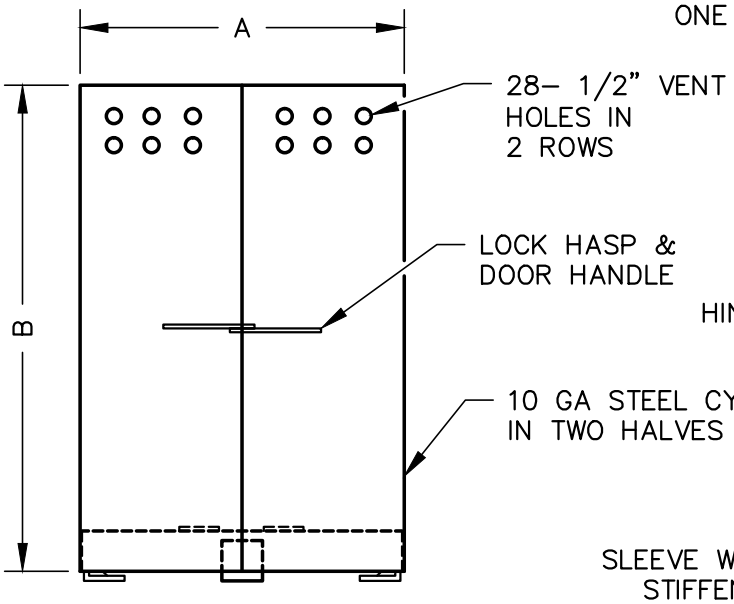

FRONT

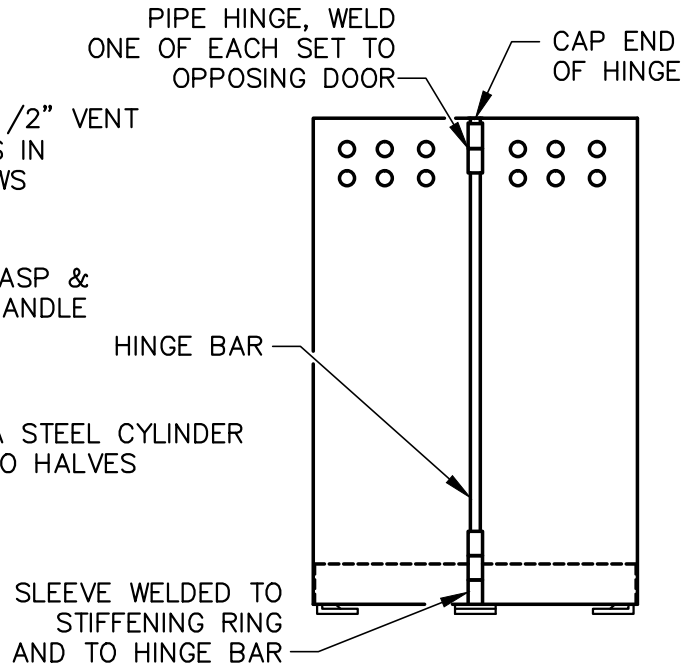

BACK

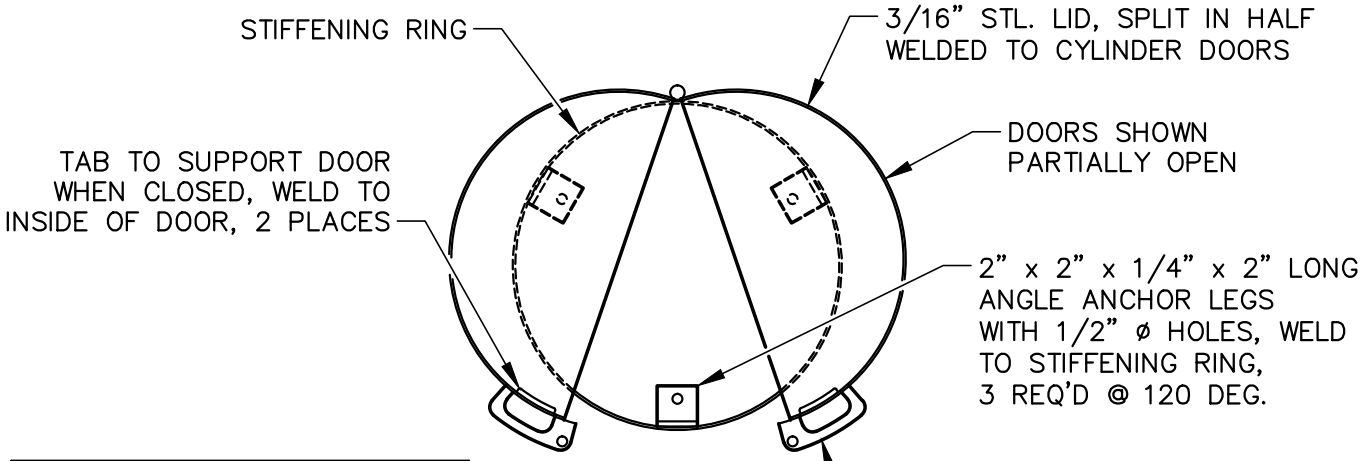

TOP

VALVE SIZE	DIAMETER A	HEIGHT B
1"	16"	24"
2"	16"	30"
4"	24"	36"
6"	30"	42"

NOTE:
THIS ENCLOSURE SHALL BE SUPPLIED WITH A ZINC RICH PRIMER AND RAL–1023 "SAFETY YELLOW" POLYESTER POWDER COAT FINISH.

ITEM	DESCRIPTION	APPROVED MATERIAL LIST NUMBER
	AIR & VACUUM VALVE ENCLOSURE	11–D, 11–E, 11–F

CITY OF VICTORVILLE - ENGINEERING DEPARTMENT

REV.	DATE	BY		
2	12/18/14	STAFF	**AIR & VACUUM VALVE ENCLOSURE**	**W-27**
1	10/16/08	STAFF	BRIAN W. GENGLER, CITY ENGINEER	SHEET 1 OF 1

NOTES:

A. REDUCED PRESSURE DETECTOR BACKFLOW ASSEMBLY SHALL BE INSTALLED IN A LOCATION APPROVED BY VWD AND THE FIRE DEPARTMENT HAVING JURISDICTION.

B. REDUCED PRESSURE DETECTOR BACKFLOW ASSEMBLY SHALL BE INSTALLED HORIZONTAL AND PLUMB.

C. ASSEMBLIES MUST BE USC & CDPH APPROVED.

D. RPBD MUST BE TESTED BY A CERTIFIED CITY BACKFLOW TESTER PRIOR TO WATER SERVICE BEING ACTIVATED. A COPY OF THE TEST MUST BE SUBMITTED TO THE INSPECTOR. △2

E. ALL ASSEMBLIES 2 1/2" AND LARGER SHALL BE FLANGED OR VICTAULIC. △2

F. GUARD POSTS (PER STD. DWG. W-42) REQUIRED IF INSTALLING WHERE ACCESSIBLE TO TRAFFIC.

G. **ALL JOINTS TO BE RESTRAINED.** (SEE ITEM 5 OF APPROVED MATERIALS LIST) △2

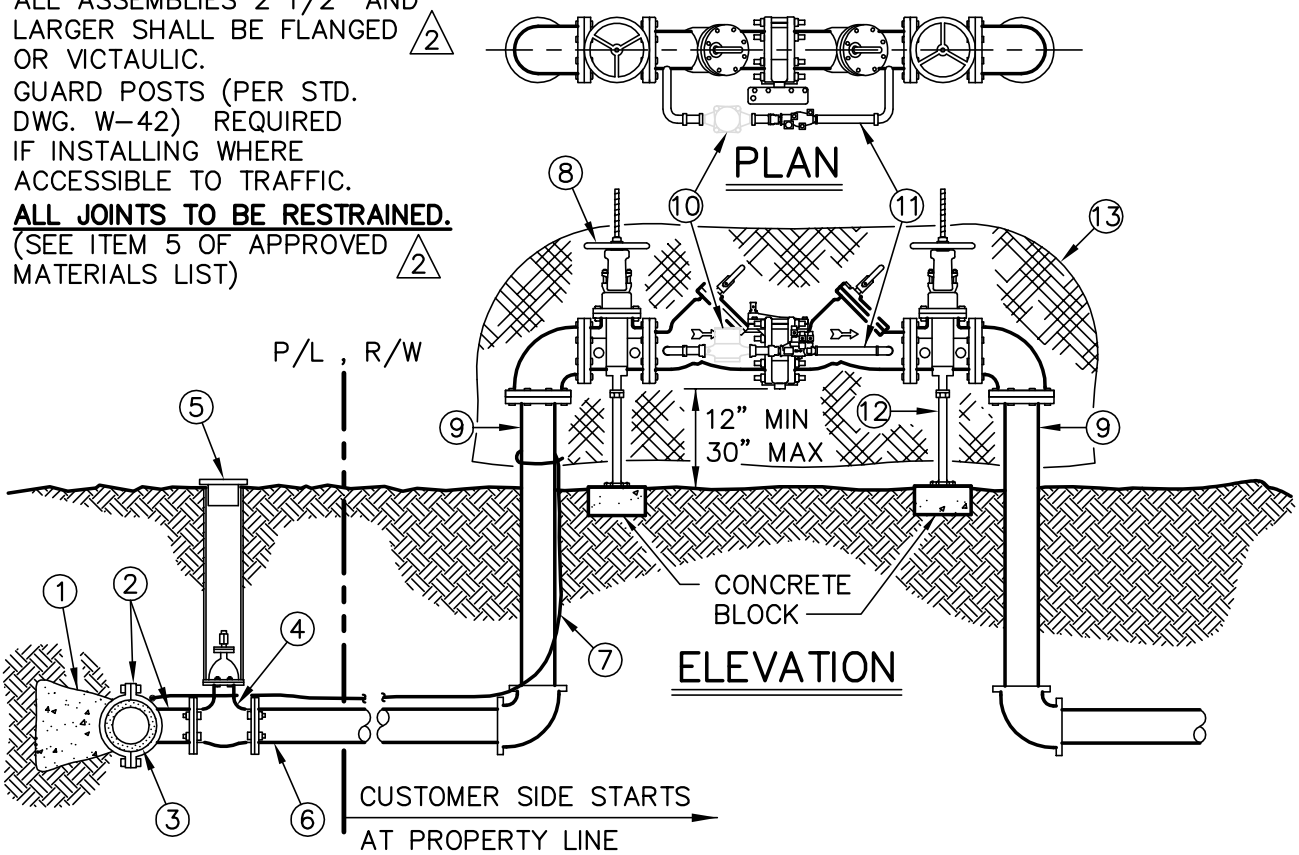

ITEM	DESCRIPTION	APPROVED MATERIAL LIST NUMBER
1	THRUST BLOCK, AS REQUIRED	
2	TAPPING SLEEVE OR TEE	7-A
3	WATER MAIN	
4	RESILIENT WEDGE GATE VALVE (MIN. 6")	2-B
5	VALVE CAN & COVER PER STD. DWG. W-18	13-F,G,H
6	PIPE	1-A,B,C
7	LOCATING WIRE WITH CONNECTORS (IF REQUIRED BY INSPECTOR) △2	10-A, 10-B
8	REDUCED PRESSURE DETECTOR ASSEMBLY W/ OS&Y VALVES △2	12-A
9	PIPE	1-C
10	3/4-INCH BY-PASS METER (FURNISHED AND INSTALLED BY VWD) △2	13-C
11	BY-PASS LINE ASSEMBLY WITH RP BACKFLOW	4-A △2
12	ADJUSTABLE PIPE SUPPORT (REQUIRED FOR 6" & LARGER)	13-D
13	INSULATING BAG	4-B

CITY OF VICTORVILLE - ENGINEERING DEPARTMENT

REV.	DATE	BY		
2	7/24/14	STAFF	**FIRE SERVICE - REDUCED PRESSURE DETECTOR ASSEMBLY**	**W-28**
1	8/20/08	STAFF	BRIAN W. GENGLER, CITY ENGINEER	SHEET 1 OF 1

BLANK INTENTIONALLY

CITY OF VICTORVILLE - ENGINEERING DEPARTMENT				
REV.	DATE	BY	BLANK INTENTIONALLY	W-29
2	7/2/14	STAFF		
1	7/10/08	STAFF	BRIAN W. GENGLER, CITY ENGINEER	SHEET 1 OF 1

NOTES:

A. REDUCED PRESSURE DETECTOR BACKFLOW ASSEMBLY SHALL BE INSTALLED IN A LOCATION APPROVED BY VWD.

B. REDUCED PRESSURE DETECTOR BACKFLOW ASSEMBLY SHALL BE INSTALLED HORIZONTAL AND PLUMB.

C. ASSEMBLIES MUST BE USC & CDPH APPROVED.

D, RPBD MUST BE TESTED BY A CERTIFIED CITY BACKFLOW TESTER PRIOR TO WATER SERVICE BEING ACTIVATED. A COPY OF THE TEST MUST BE SUBMITTED TO THE INSPECTOR.

E. ALL ASSEMBLIES 3" AND LARGER SHALL BE FLANGED OR VICTAULIC.

F. GUARD POSTS (PER STD. DWG. W–42) REQUIRED IF INSTALLING WHERE ACCESSIBLE TO TRAFFIC.

G. **ALL JOINTS TO BE RESTRAINED.** (SEE ITEM 5 OF APPROVED MATERIALS LIST.)

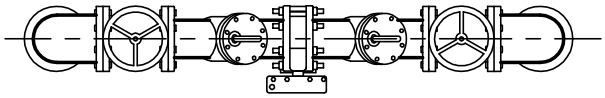

PLAN

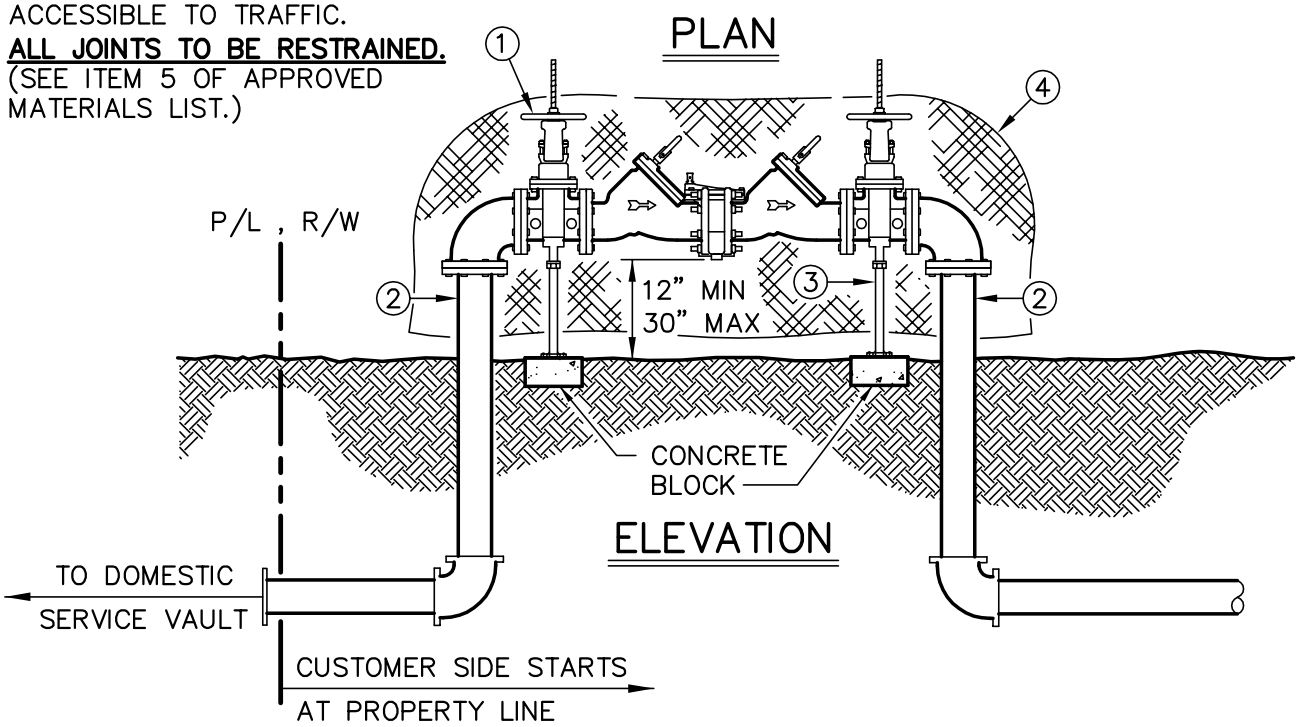

ELEVATION

ITEM	DESCRIPTION	APPROVED MATERIAL LIST NUMBER
1	REDUCED PRESSURE DETECTOR ASSEMBLY	12–A
2	PIPE, SAME SIZE AS METER SERVICE LINE	1–C
3	ADJUSTABLE PIPE SUPPORT (REQUIRED FOR 6" & LARGER)	13–C
4	INSULATING BAG	4–B

CITY OF VICTORVILLE - ENGINEERING DEPARTMENT				
REV.	DATE	BY	**3" AND LARGER - REDUCED PRESSURE BACKFLOW DEVICE INSTALLATION**	**W-30**
1	7/24/14	STAFF	BRIAN W. GENGLER, CITY ENGINEER	SHEET 1 OF 1

NOTES:

A. RP AND PIPING SHALL BE AT LEAST THE SAME DIAMETER AS THE METER.
B. BACKFLOW DEVICE SHALL BE LEAD FREE WILKINS 975 XL2 OR APPROVED EQUAL.
C. PRESSURE REGULATOR INSTALLED WHEN PRESSURE IS GREATER THAN 100PSI.
D. RP SHALL BE LOCATED AS CLOSE TO THE METER AS POSSIBLE. LOCATION SHALL BE APPROVED BY INSPECTOR.
E. NO CONNECTIONS OF ANY KIND WILL BE ALLOWED IN THIS AREA. INSPECTION BY THE CITY SHALL TAKE PLACE PRIOR TO BACKFILL.
F. CONCRETE PAD 3 3/4" WITH BACKFLOW ENCLOSURE (ALL SPEC) PART NO. BFE-5430 FOR 2" DEVICE AND BFED-6036 FOR 2 1/2" DEVICE.
G. FREEZE PROTECTION BLANKET WITH MINIMUM R-30 RATING.
H. Y STRAINER TO BE INSTALLED BEFORE BACKFLOW DEVICE.
I. RPBD MUST BE TESTED BY A CERTIFIED CITY BACKFLOW TESTER PRIOR TO WATER SERVICE BEING ACTIVATED. A COPY OF THE TEST MUST BE SUBMITTED TO THE INSPECTOR.

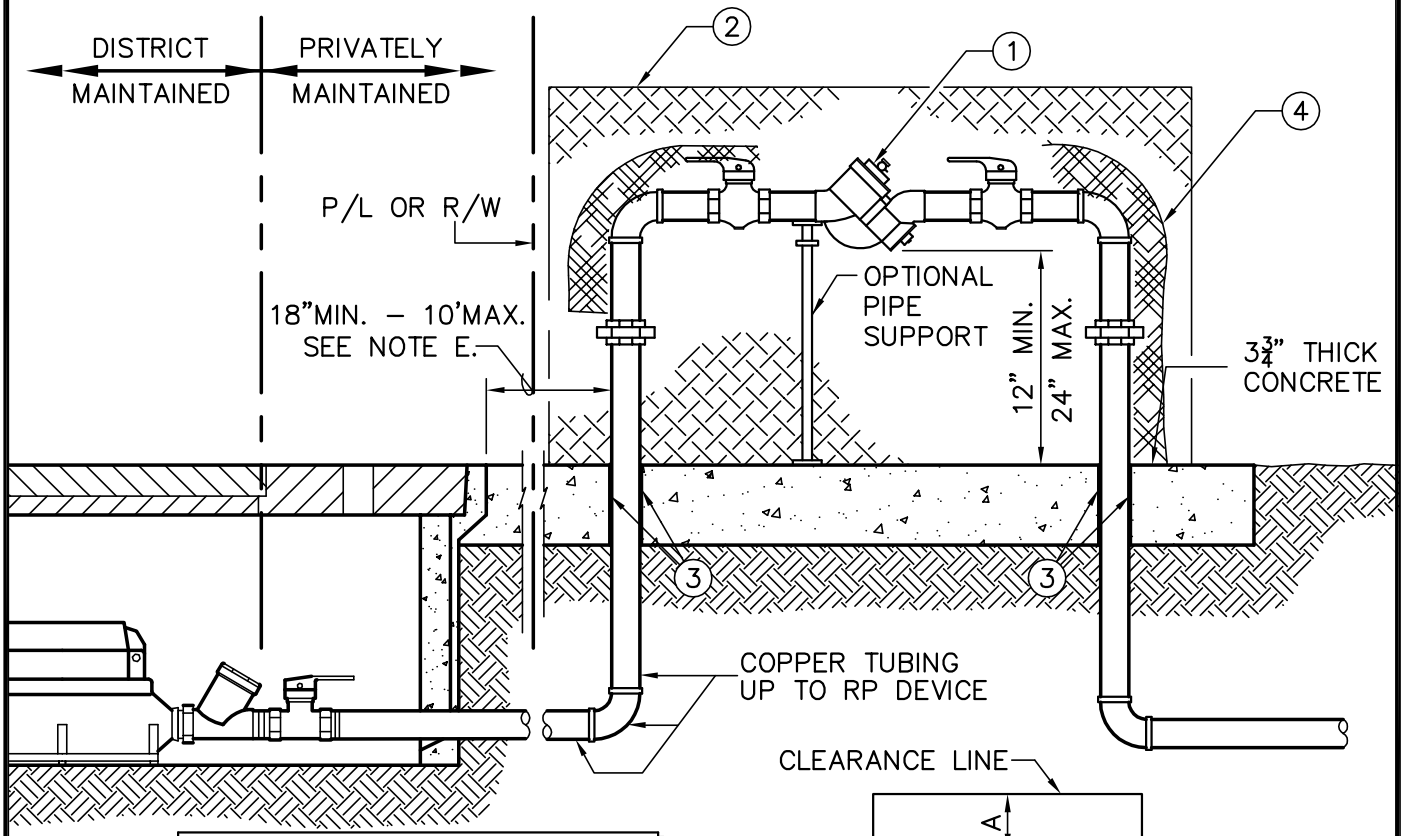

MINIMUM CLEARANCE			
SIZE	A	B	C
3/4" – 2"	12"	12"	12"

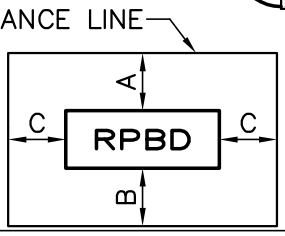

ITEM	DESCRIPTION	APPROVED MATERIAL LIST NUMBER
1	REDUCED PRESSURE PRINCIPLE BACKFLOW PREVENTION DEVICE	4-A
2	ALL SPEC BACKFLOW ENCLOSURE	13-L
3	BOND BREAKER	13-E
4	INSULATING BAG	4-B

CITY OF VICTORVILLE - ENGINEERING DEPARTMENT

REV.	DATE	BY	LMAD BACKFLOW DEVICE INSTALLATION	W-31
1	7/24/14	STAFF	BRIAN W. GENGLER, CITY ENGINEER	SHEET 1 OF 1

BLANK INTENTIONALLY

CITY OF VICTORVILLE - ENGINEERING DEPARTMENT				
REV.	DATE	BY	BLANK INTENTIONALLY	W-32
2	7/2/14	STAFF		
1	7/10/08	STAFF	BRIAN W. GENGLER, CITY ENGINEER	SHEET 1 OF 1

NOTES:

A. FOR VAULT AND PIPING LAYOUT, SEE APPLICABLE STANDARD DRAWINGS.

B. A JOINT SEALING COMPOUND SHALL BE USED AT ALL JOINTS.

C. TRAFFIC RATED LID MAY BE REQUIRED.

D. MINIMUM VAULT LID DIMENSION FOR VAULTS UP TO 5' WIDE AND 9' LONG SHALL BE 4' X 6'.

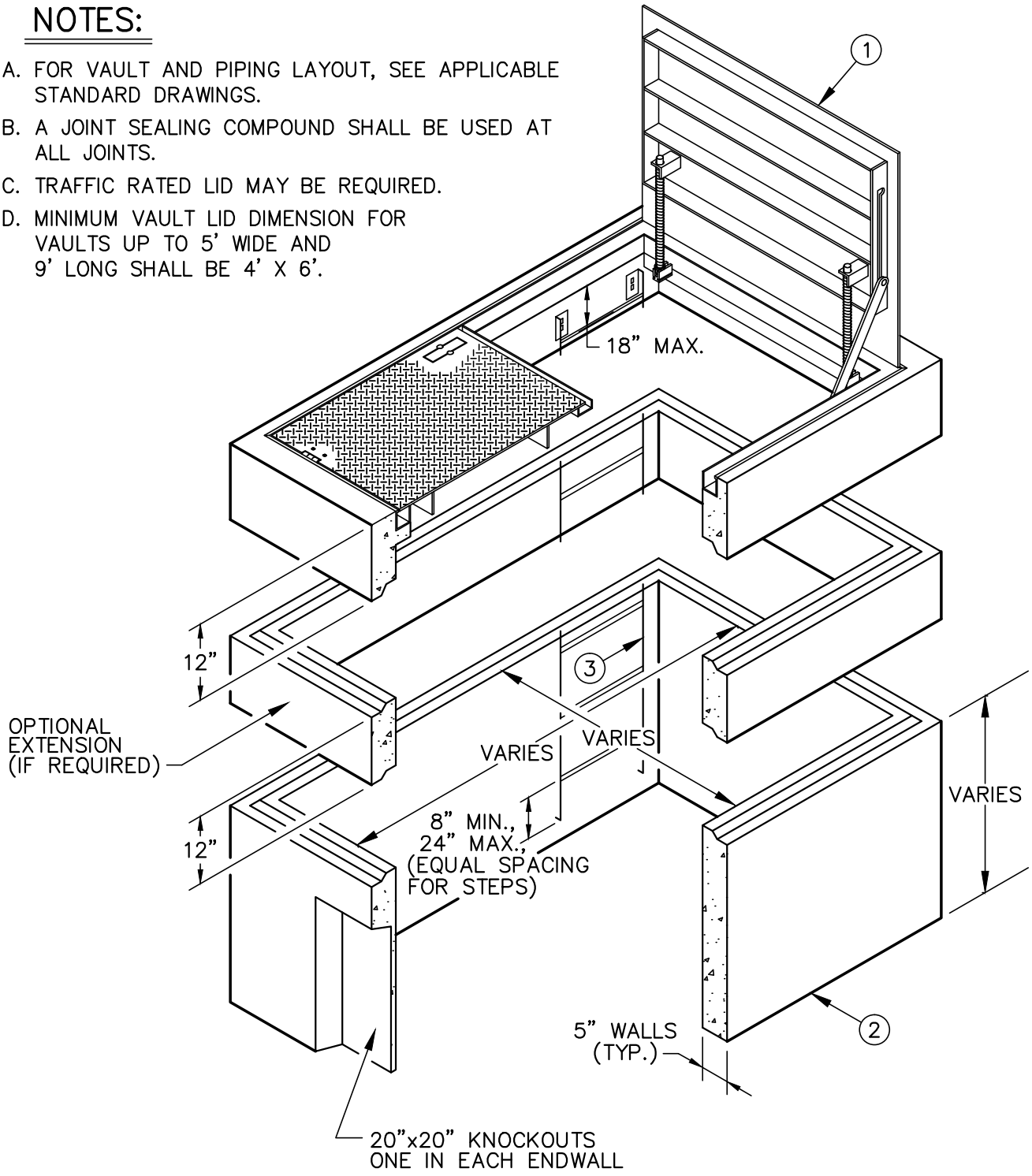

ITEM	DESCRIPTION	APPROVED MATERIAL LIST NUMBER
1	VAULT LID	9–B, 9–C
2	VAULT BOX	9–A
3	LADDER	9–F

CITY OF VICTORVILLE - ENGINEERING DEPARTMENT

REV.	DATE	BY		
2	12/18/14	STAFF	**VAULT AND LID**	**W-33**
1	10/20/08	STAFF	BRIAN W. GENGLER, CITY ENGINEER	SHEET 1 OF 1

NOTES:

A. (W) INDICATES PRESSURE UTILITY WATER MAIN FOR POTABLE WATER. DIMENSIONS ARE FROM OUTSIDE OF WATER PIPE TO OUTSIDE OF SEWER PIPE.

B. SEWER LINES SHALL BE INSTALLED AS FAR FROM UTILITY WATER LINES AS POSSIBLE.

C. IN CASES WHERE THE SEWER LINE CROSSES A WATER LINE, THE LENGTH OF SEWER PIPE SHALL BE CENTERED ON THE WATER LINE.

D. SEWER BUILDING LATERALS SHALL BE INSTALLED BELOW UTILITY WATER LINES. IF THIS CONDITION CANNOT BE MET, SPECIAL CONSTRUCTION WILL BE REQUIRED, AS SHOWN BELOW.

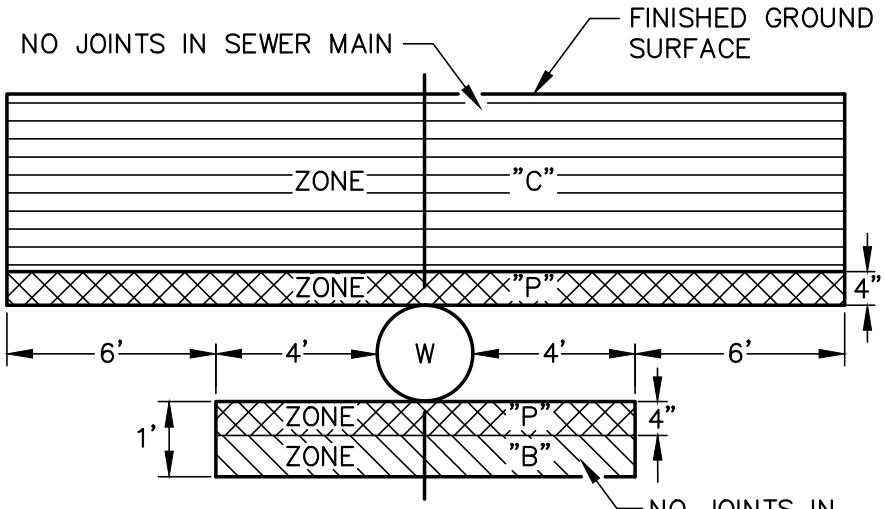

CROSSING

SANITARY SEWERS AND UTILITY WATER LINES

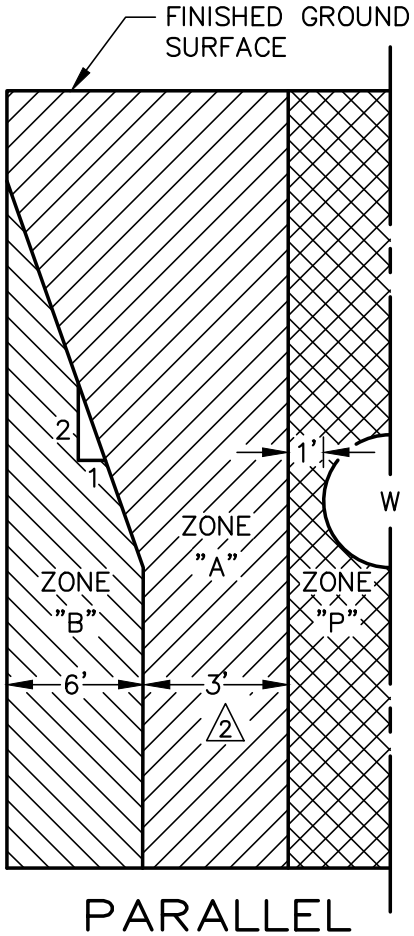

PARALLEL

SANITARY SEWERS AND UTILITY WATER LINES

A	SEWER MAINS WILL NOT BE PERMITTED IN THIS ZONE WITHOUT SPECIAL PERMISSION FROM THE DEPARTMENT OF PUBLIC HEALTH, STATE OF CALIFORNIA.
B	SEWER MAINS WILL NOT BE PERMITTED IN THIS ZONE WITHOUT SPECIAL PERMISSION FROM THE CITY ENGINEER. 2
C	SEWER MAINS IN THIS ZONE SHALL BE INSTALLED WITHIN A 1/4-INCH STEEL CONTINUOUS CASING WITH ALL VOIDS BETWEEN SEWER PIPE AND CASING FILLED WITH SAND. 2
P	ZONE P IS A PROHIBITED ZONE, SECTION 64630 (e) (2) CALIFORNIA ADMINISTRATION CODE, TITLE 22.

CITY OF VICTORVILLE - ENGINEERING DEPARTMENT

REV.	DATE	BY		
2	12/18/14	STAFF	**SEPARATION CRITERIA FOR EXISTING WATER MAINS FROM NEW SANITARY SEWERS OR STORM DRAINS**	**W-34**
1	8/20/08	STAFF	BRIAN W. GENGLER, CITY ENGINEER	SHEET 1 OF 1

NOTES:

1. (S) INDICATES SANITARY SEWER MAIN OR STORM DRAIN. DIMENSIONS ARE FROM OUTSIDE OF WATER PIPE TO OUTSIDE OF SEWER OR STORM DRAIN PIPE.
2. WATER SERVICE LATERALS SHALL BE INSTALLED 4" OR MORE ABOVE SEWER MAIN OR STORM DRAIN. IF THIS CONDITION CANNOT BE MET, SPECIAL CONSTRUCTION WILL BE REQUIRED.

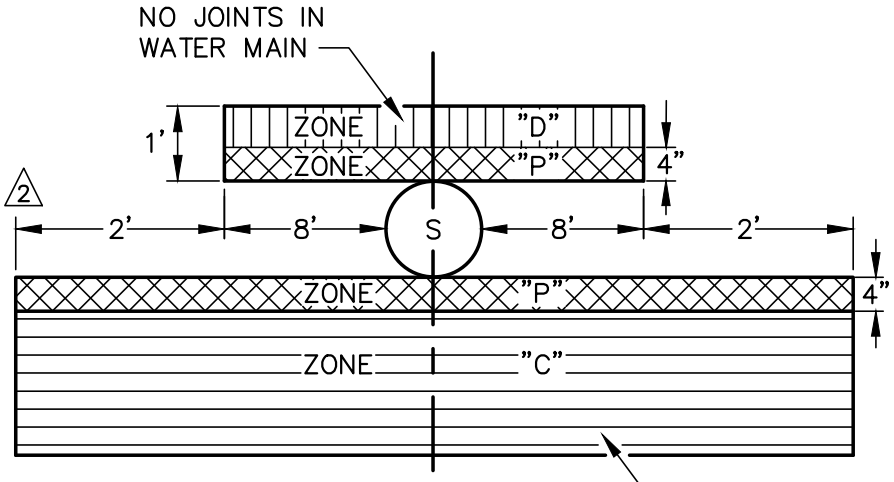

CROSSING

WATER MAIN AND SANITARY SEWER OR STORM DRAIN

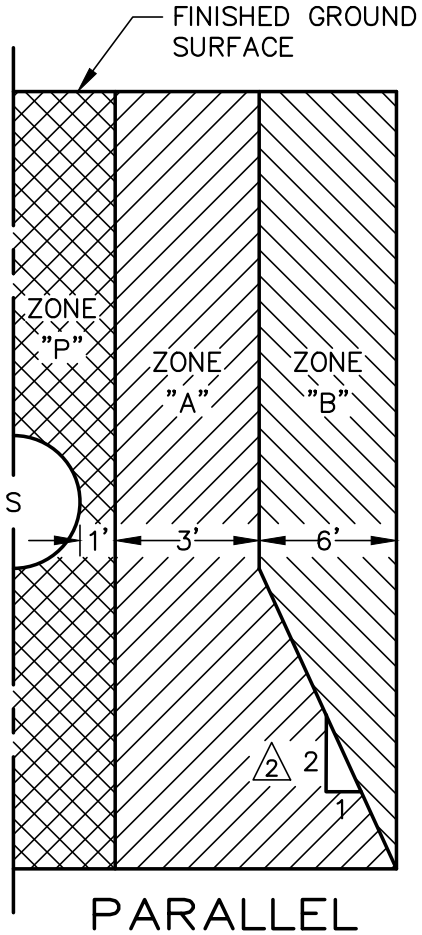

PARALLEL

WATER MAIN AND SANITARY SEWER OR STORM DRAIN

A	WATER MAINS WILL NOT BE PERMITTED IN THIS ZONE WITHOUT SPECIAL PERMISSION FROM THE DEPARTMENT OF PUBLIC HEALTH, STATE OF CALIFORNIA.
B	WATER MAINS WILL NOT BE PERMITTED IN THIS ZONE WITHOUT SPECIAL PERMISSION FROM THE CITY ENGINEER. 2
C	WATER MAINS IN THIS ZONE SHALL BE CONSTRUCTED OF CML&C STEEL PIPE WITH NO JOINTS OR DUCTILE IRON PIPE (CLASS 350 MIN.) WITH HOT DIP BITUMINOUS COATING, INSTALLED WITHIN A 1/4-INCH STEEL WELDED CASING PER STANDARD DRAWINGS W-37 & W-38
D	THE WATER MAIN SHALL HAVE NO JOINTS WITHIN FOUR FEET FROM EITHER SIDE OF THE SEWER OR STORM DRAIN.
P	ZONE P IS A PROHIBITED ZONE, SECTION 64630 (e) (2) CALIFORNIA ADMINISTRATION CODE, TITLE 22.

CITY OF VICTORVILLE - ENGINEERING DEPARTMENT

REV.	DATE	BY		
2	5/24/12	STAFF	**SEPARATION CRITERIA FOR NEW WATER MAINS FROM EXISTING SANITARY SEWERS OR STORM DRAINS**	**W-35**
1	8/20/08	STAFF	BRIAN W. GENGLER, CITY ENGINEER	SHEET 1 OF 1

NOTES:

A. TRENCH PATH SHALL BE STRAIGHT GRADE ACROSS WIDTH, AND SHALL NOT BE CURVED AT CENTER.

B. BACKFILL MATERIAL WITHIN **PIPE ZONE** SHALL HAVE SAND EQUIVALENT ≥30. SELECT MATERIAL FROM EXCAVATION MAY BE USED ONLY WITH APPROVAL FROM INSPECTOR.

C. **PIPE ZONE** MATERIAL SHALL BE JETTED.

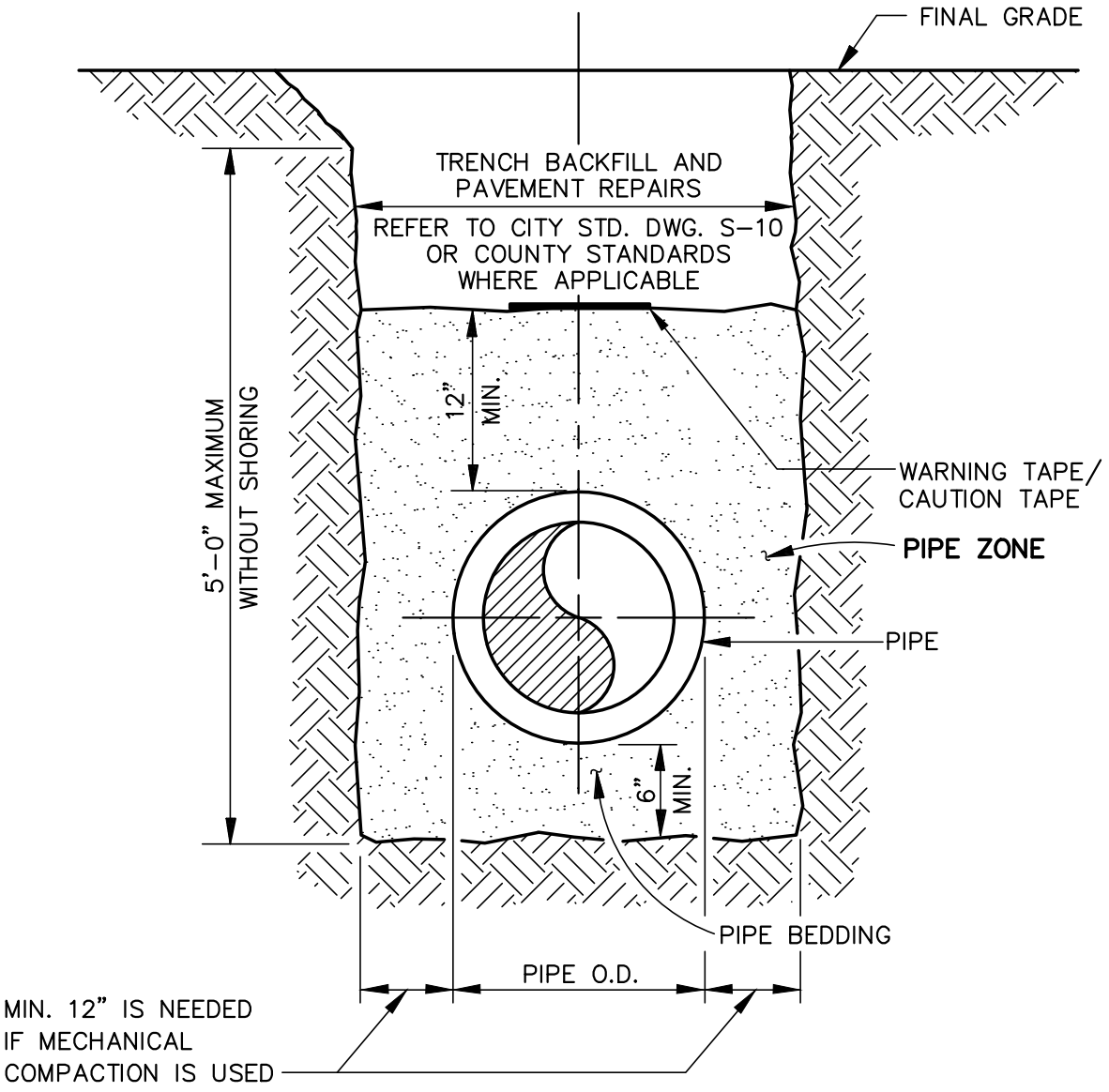

CITY OF VICTORVILLE - ENGINEERING DEPARTMENT				
REV.	DATE	BY	**TYPICAL TRENCH BACKFILL SCHEMATIC**	**W-36**
2	7/28/15	STAFF		
1	10/20/08	STAFF	BRIAN W. GENGLER, CITY ENGINEER	SHEET 1 OF 1

NOTES:

A. THIS STANDARD APPLIES TO UNDERCROSSINGS OF STORM DRAINS & SEWERS LESS THAN 6'–0" IN DIAMETER OR WIDTH, OR AS DIRECTED BY THE CITY. FOR LARGER UNDERCROSSINGS, REFER TO STANDARD DRAWING W–38.

B. WHEREVER POSSIBLE, WATERLINE SHOULD BE INSTALLED OVER TOP OF SEWER OR STORM DRAIN. DISCUSS MINIMUM COVER REQUIREMENTS WITH THE CITY.

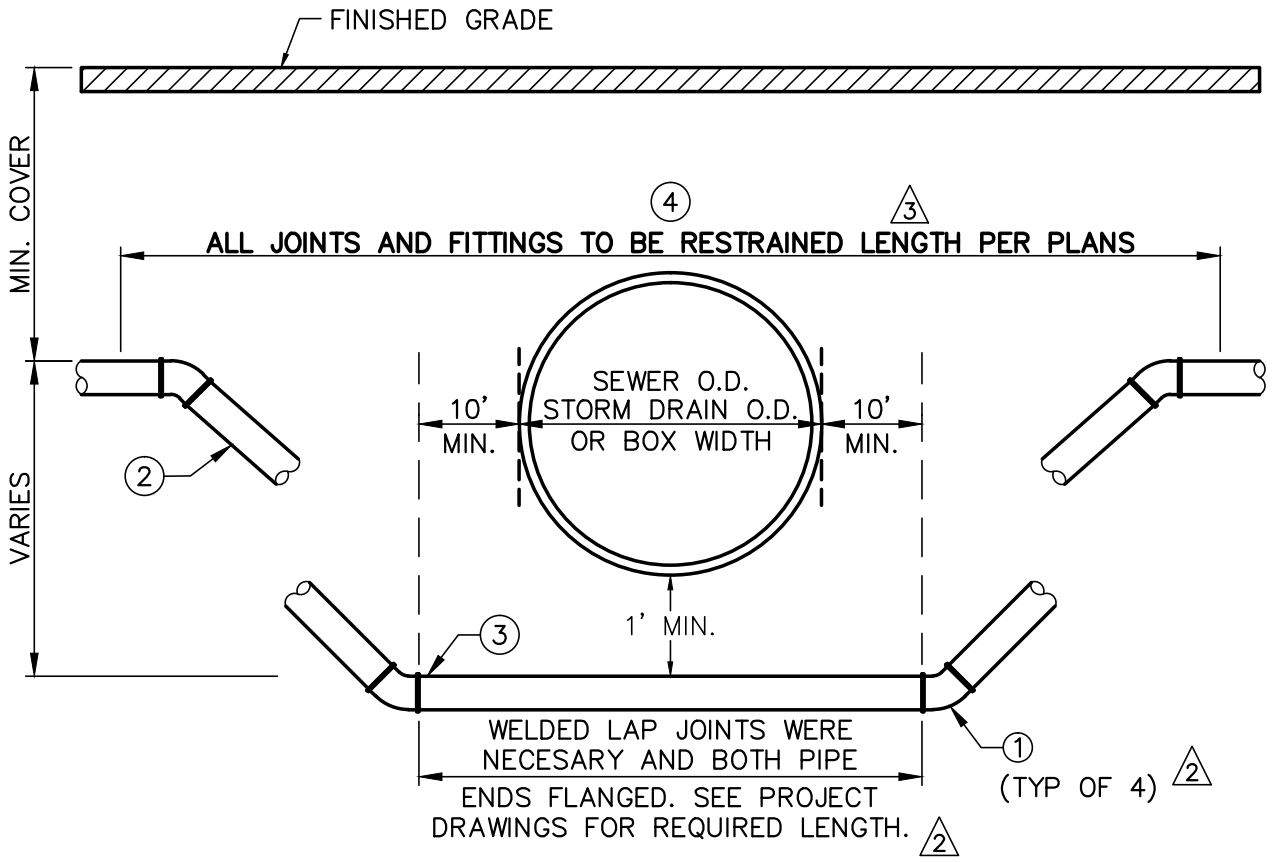

ITEM	DESCRIPTION	APPROVED MATERIAL LIST NUMBER
1	45° BEND 2	6–C
2	DUCTILE IRON PIPE	1–C
3	CEMENT MORTAR LINED AND COATED STEEL PIPE	1–F 3
4	JOINT RESTRAINTS	5–A, B, C

CITY OF VICTORVILLE - ENGINEERING DEPARTMENT

REV.	DATE	BY		
3	4/6/16	STAFF	**CEMENT MORTAR LINED AND COATED (CML&C) STEEL PIPE / SEWER AND STORM DRAIN UNDERCROSSING**	**W-37**
2	12/18/14	STAFF		
1	8/20/08	STAFF	BRIAN W. GENGLER, CITY ENGINEER	SHEET 1 OF 1

NOTES:

A. INSTALL CASING SPACERS WITHIN 1' FROM EACH END OF THE CASING AND 1' FROM EACH BELL JOINT AND AT THE CENTER OF EACH PIPE JOINT. CONSULT MANUFACTURER FOR RECOMMENDED SPACER SIZE.

B. THIS STANDARD APPLIES TO UNDERCROSSINGS OF SEWERS AND STORM DRAINS GREATER THAN 6'–0" IN DIAMETER OR WIDTH, OR AS DIRECTED BY THE CITY.

C. WHEREVER POSSIBLE, WATERLINE SHOULD BE INSTALLED OVER TOP OF SEWER OR STORM DRAIN. DISCUSS MINIMUM COVER REQUIREMENTS WITH THE CITY.

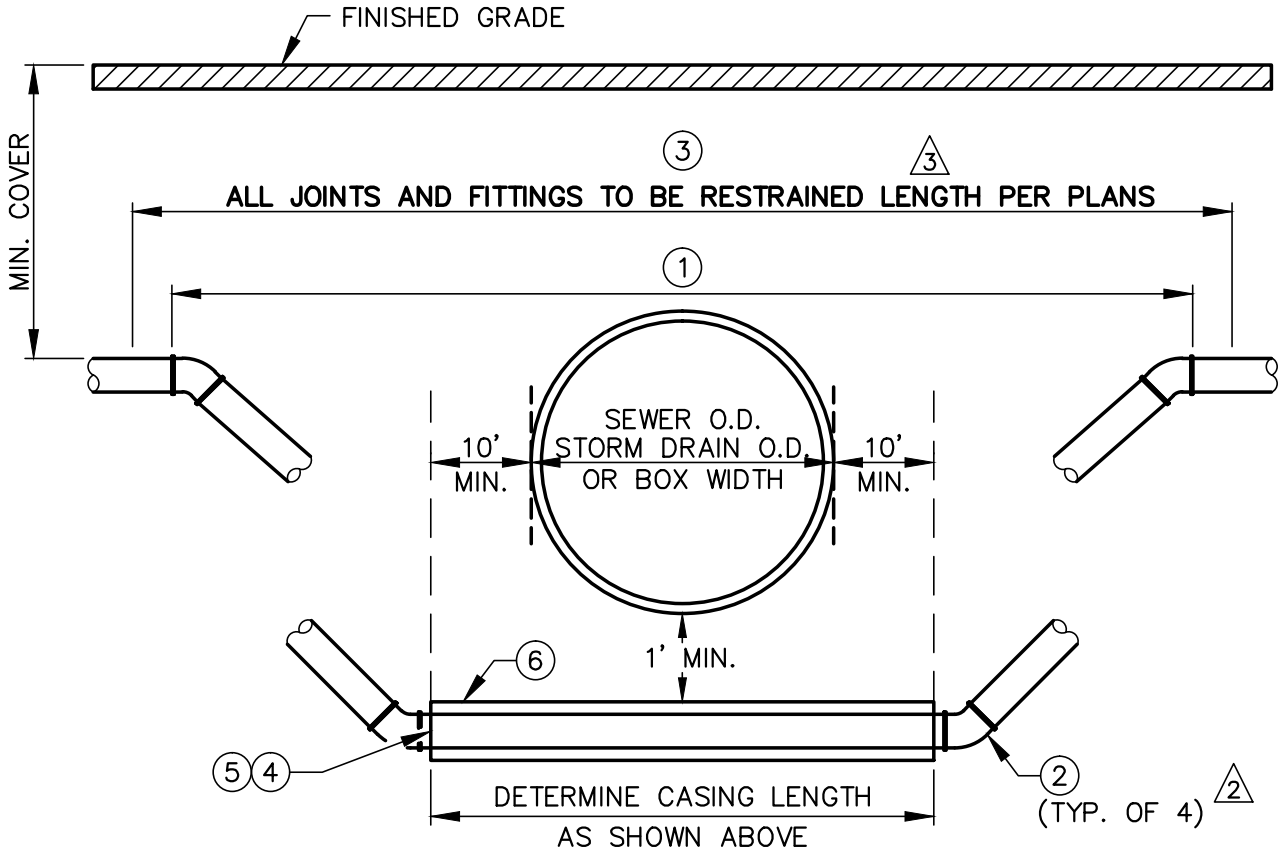

WATER MAIN SIZE	MIN. SLEEVE SIZE / WALL THKNS	WATER MAIN SIZE	MIN. SLEEVE SIZE / WALL THKNS
8"	18" / .25"	18"	30" / .25"
12"	18" / .25"	20"	36" / .375"
16"	30" / .25"	24"	36" / .375"

ITEM	DESCRIPTION	APPROVED MATERIAL LIST NUMBER
1	DUCTILE IRON PIPE	1–C
2	45° BEND 2	6–C
3	JOINT RESTRAINTS	5–A, B, C
4	CASING SPACERS	8–A
5	END SEAL	8–C
6	STEEL CASING	8–B

CITY OF VICTORVILLE - ENGINEERING DEPARTMENT

REV.	DATE	BY
3	4/6/16	STAFF
2	12/18/14	STAFF
1	8/20/08	STAFF

STEEL SLEEVE / SEWER AND STORM DRAIN UNDERCROSSING

BRIAN W. GENGLER, CITY ENGINEER

W-38

SHEET 1 OF 1

NOTES:

2 A. RP AND PIPING SHALL BE AT LEAST THE SAME DIAMETER AS THE METER.

2 B. PLACE BOTTOM OF VALVE A MINIMUM OF 12" AND A MAXIMUM OF 24" ABOVE FINISHED GRADE. FOLLOW MANUFACTURES SPECIFICATIONS FOR PLACEMENT IN RESIDENTIAL APPLICATIONS.

2 C. CUSTOMER SHALL PROTECT DEVICE FROM FREEZING AND MAINTAIN ACCESS FOR TESTING. ACCESS BOX IS REQUIRED IN RESIDENTIAL APPLICATIONS.

D. RP SHALL BE LOCATED AS CLOSE TO THE METER AS POSSIBLE. LOCATION SHALL BE APPROVED BY INSPECTOR.

E. NO CONNECTIONS OF ANY KIND WILL BE ALLOWED IN THIS AREA. INSPECTION BY THE CITY SHALL TAKE PLACE PRIOR TO BACKFILL.

2 F. RPBD MUST BE TESTED BY A CERTIFIED CITY BACKFLOW TESTER PRIOR TO WATER SERVICE BEING ACTIVATED. A COPY OF THE TEST MUST BE SUBMITTED TO THE INSPECTOR.

2 G. WHEN PRESSURE IS ≥ 100 PSI, A PRESSURE REGULATOR MUST BE INSTALLED.

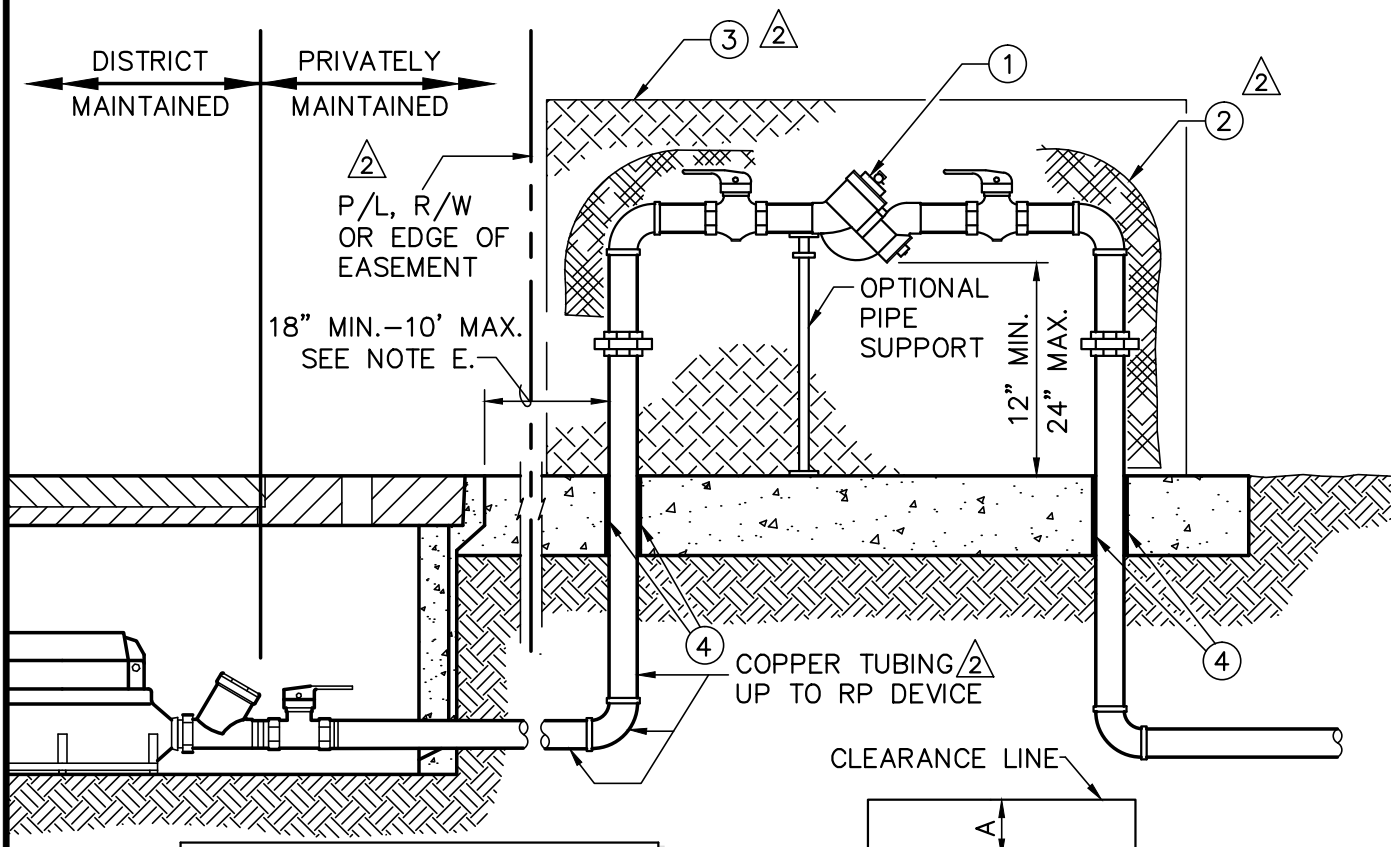

MINIMUM CLEARANCE			
SIZE	A	B	C
3/4" – 2"	12"	12"	12"

ITEM	DESCRIPTION	APPROVED MATERIAL LIST NUMBER
1	REDUCED PRESSURE PRINCIPLE BACKFLOW PREVENTION DEVICE	4–A
2	INSULATING BAG	4–B
3	ALL SPEC BACKFLOW ENCLOSURE	13–L
4	BOND BREAKER	13–E

CITY OF VICTORVILLE - ENGINEERING DEPARTMENT				
REV.	DATE	BY	2" AND SMALLER - REDUCED PRESSURE BACKFLOW DEVICE INSTALLATION	W-39
2	12/18/14	STAFF		
1	8/20/08	STAFF	BRIAN W. GENGLER, CITY ENGINEER	SHEET 1 OF 1

NOTES:

A. CURRENT (WITHIN 12 MONTHS) TESTING CERTIFICATION FOR RPBD MUST BE AVAILABLE ON JOB SITE AT ALL TIMES WHILE RPBD IS IN USE.

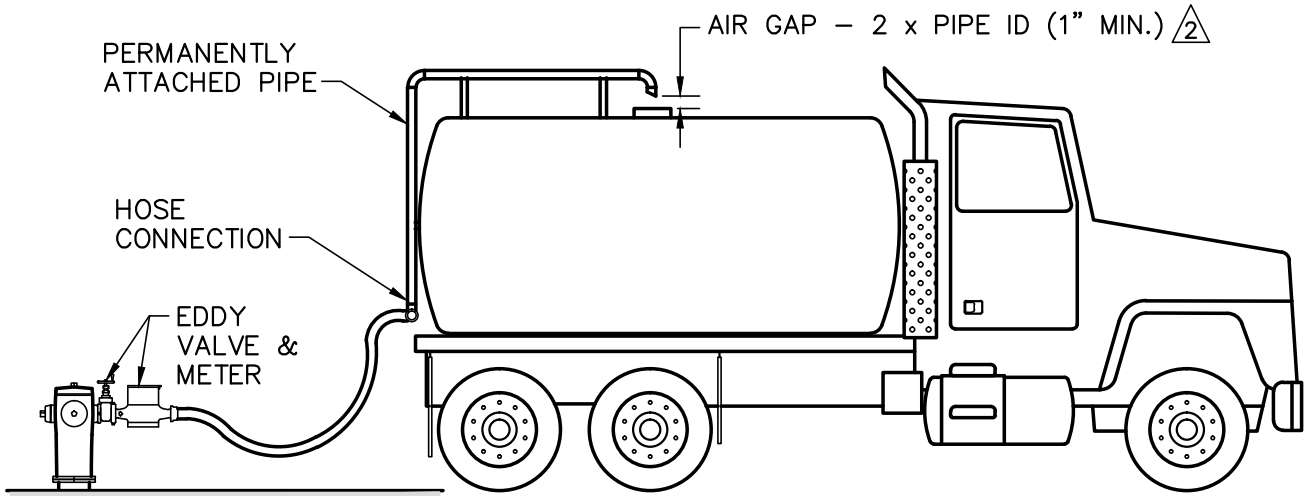

WITH AIR GAP

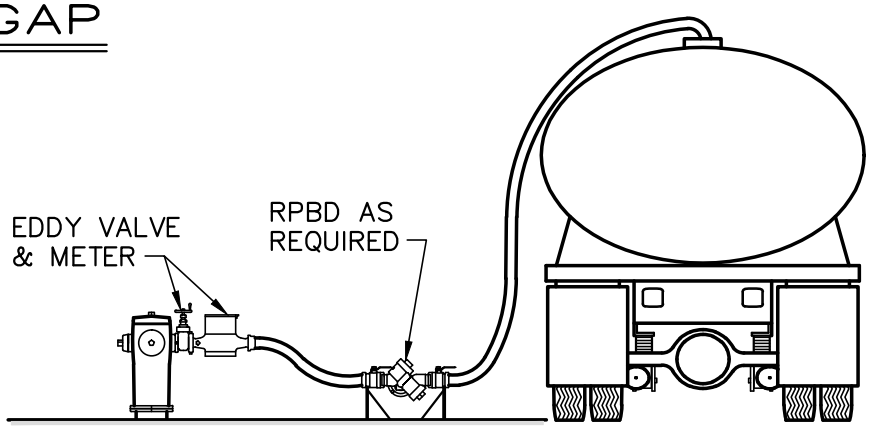

WITH PORTABLE ASSEMBLY

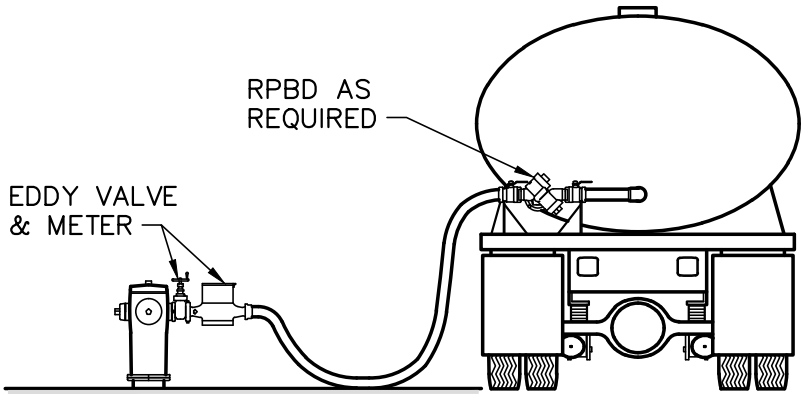

WITH TRUCK MOUNTED ASSEMBLY

CITY OF VICTORVILLE - ENGINEERING DEPARTMENT				
REV.	DATE	BY	**MINIMUM PROTECTION FOR FILLING WATER TRUCKS**	**W-40**
2	12/18/14	STAFF		
1	8/20/08	STAFF	BRIAN W. GENGLER, CITY ENGINEER	SHEET 1 OF 1

NOTES:

A. WATER MAINS (4") DIAMETER AND SMALLER SHALL HAVE A SHORT SECTION OF PIPE REMOVED AND PIPE ENDS ENCASED IN CONCRETE.

B. EXISTING MAIN TO BE PLUGGED WITH CONCRETE OR PRESSURE GROUTED AT INTERVALS OF ABOUT 200' OR AS DIRECTED BY THE CITY ENGINEER.

C. EXISTING MAINS 16" AND LARGER REQUIRE THE ENTIRE LENGTH OF THE PIPE TO BE FILLED BY PRESSURE GROUTING OR BY BLOWN SAND.

D. EXISTING VALVES SHALL BE TURNED TO THE CLOSED POSITION. REMOVE VALVE CAN AND REPLACE WITH COMPACTED BACKFILL.

E. PRIOR CITY APPROVAL REQUIRED FOR CUTTING AND PLUGGING.

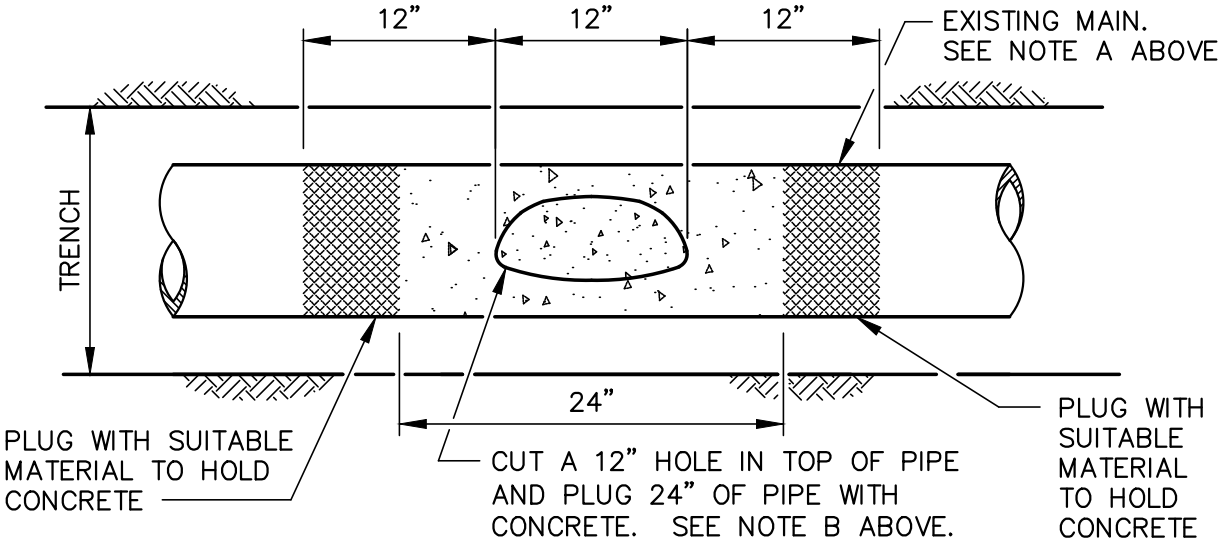

MIDDLE OF EXISTING MAIN

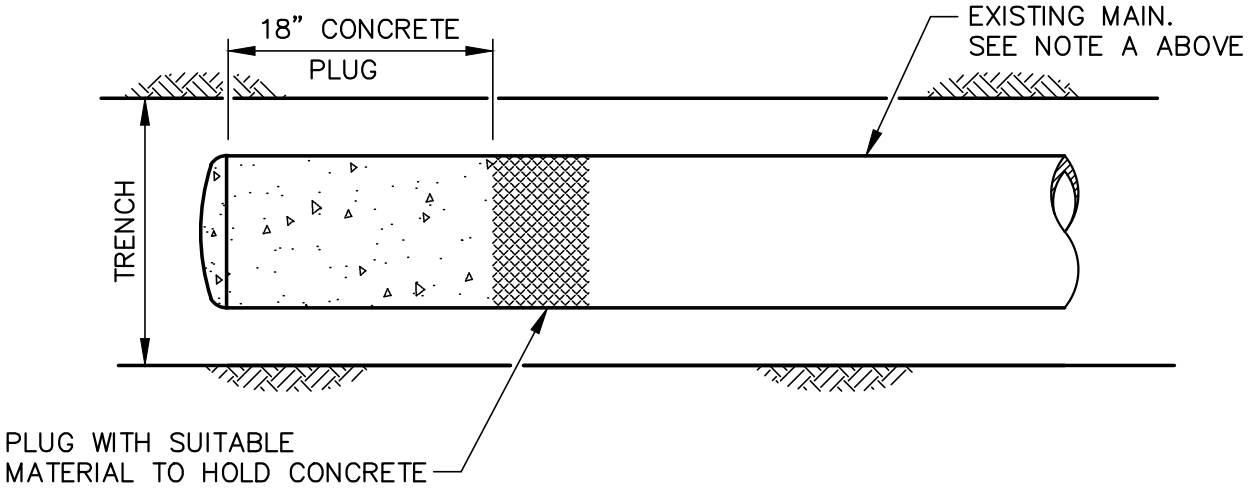

ENDS OF EXISTING MAIN

LEGEND ON PLANS:

CITY OF VICTORVILLE - ENGINEERING DEPARTMENT				
REV.	DATE	BY	**CUTTING AND PLUGGING ABANDONED WATER MAINS**	**W-41**
2	12/18/14	STAFF		
1	8/20/08	STAFF	BRIAN W. GENGLER, CITY ENGINEER	SHEET 1 OF 1

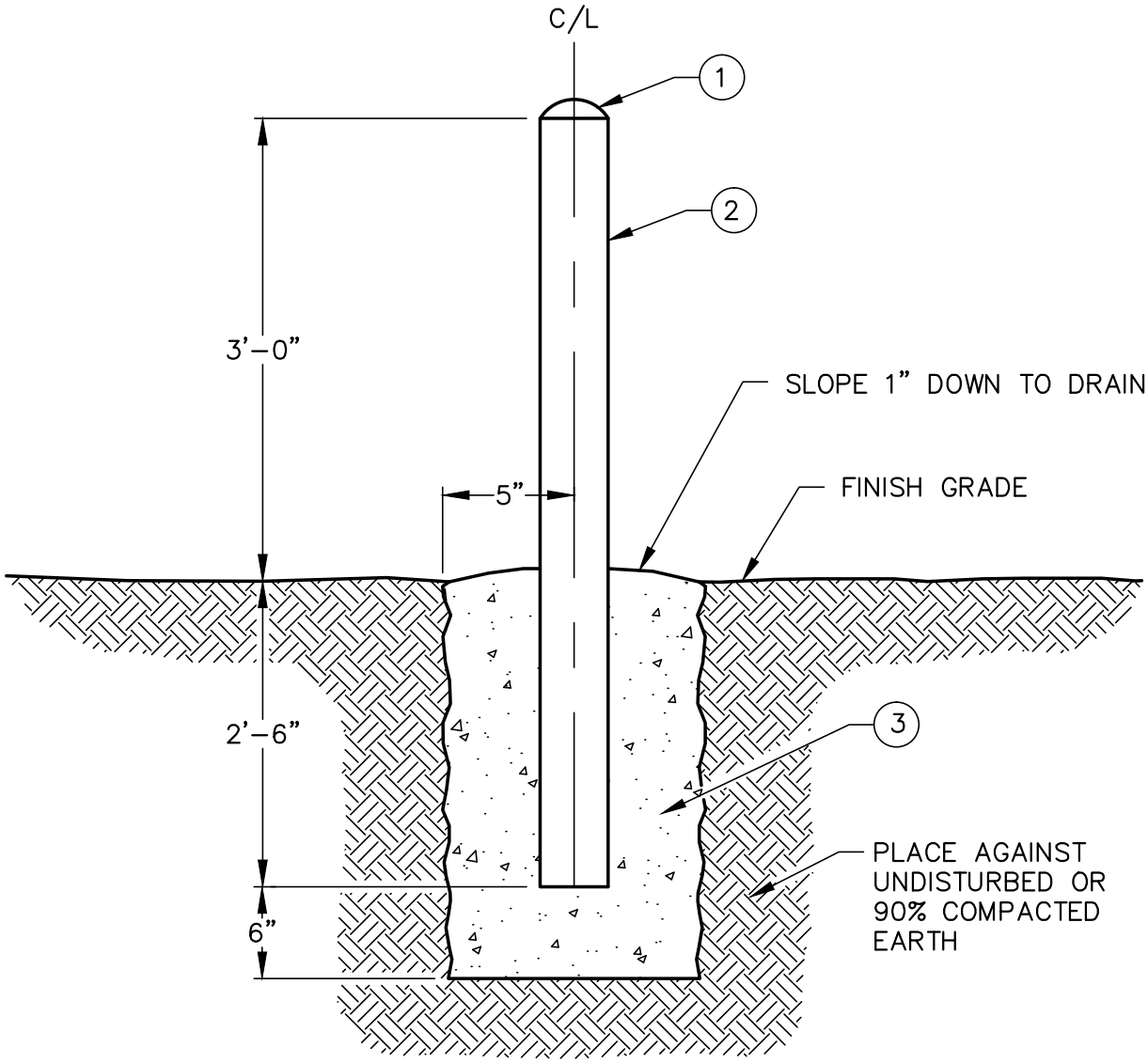

ITEM	DESCRIPTION	APPROVED MATERIAL LIST NUMBER
1	FILL PIPE WITH CONCRETE & ROUND OVER TO FORM CAP	
2	4"ø x 5'6" SCH. 40 GALVANIZED STEEL PIPE – PAINT YELLOW △2	
3	CONCRETE FOOTING, 10" DIAMETER	

CITY OF VICTORVILLE - ENGINEERING DEPARTMENT

REV.	DATE	BY		
2	12/18/14	STAFF	**GUARD POST**	**W-42**
1	8/20/08	STAFF	BRIAN W. GENGLER, CITY ENGINEER	SHEET 1 OF 1