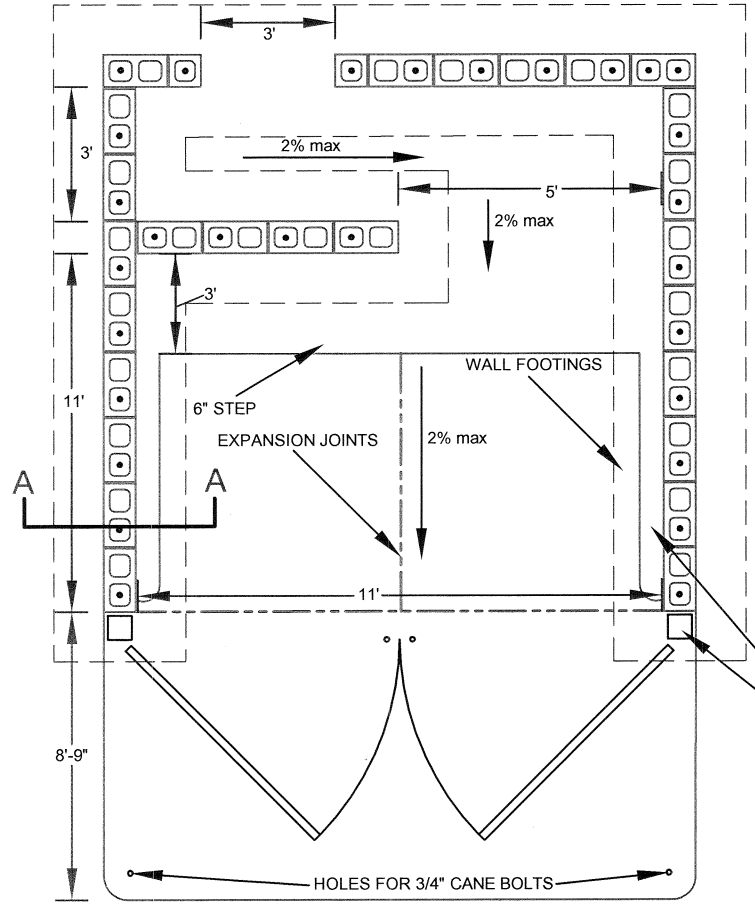

NOTE: THE TRASH ENCLOSURE SHALL COMPLY WITH ALL CALIFORNIA ACCESSIBILITY REQUIREMENTS.

1) WALLS ARE TO BE OF DECORATIVE BLOCK, MASONRY, OR SIMILAR MATERIALS CONSISTANT WITH THE ARCHITECURE, COLOR, AND ACCENT MATERIALS OF THE PRIMARY BUILDING

2) GATES ARE TO BE SOLID NON-TRANSPARENT METAL CONSTRUCTION

3) SWIVEL POINTS ON DOORS SHALL BE LOCATED OUTSIDE OF THE OPENING AREA OF THE ENCLOSURE

4) SWIVEL POINTS SHALL BE ATTACHED TO CONCRETE FILLED STEEL POSTS/COLUMNS AT ENDS OF WALLS

5) ENCLOSURE SHALL BE ON A LEVEL PAD AT GROUND LEVEL. THE AREA BETWEEN THE PAD AND THE PICK UP AREA SHALL BE A PAVED AREA 4" DEEP FOR THE WIDTH OF THE ENCLOSURE AND SHALL NOT EXCEED A GRADE OF 2%

6" X 6" CURB AROUND INTERIOR OF TRASH ENCLOSURE

1/4 6X6" STEEL POST/COLUMN

WALL NOTES:

1) 6" MIN. CMU BLOCK
2) ALL REBAR TO BE #4 MIN.
3) LAP ALL REBAR MIN. 20"
4) MIN. 3" FROM REBAR TO EARTH
5) GROUT ALL CELLS CONTAINING REBAR
6) 3" COVER OF EARTH FROM TOP OF FOOTING

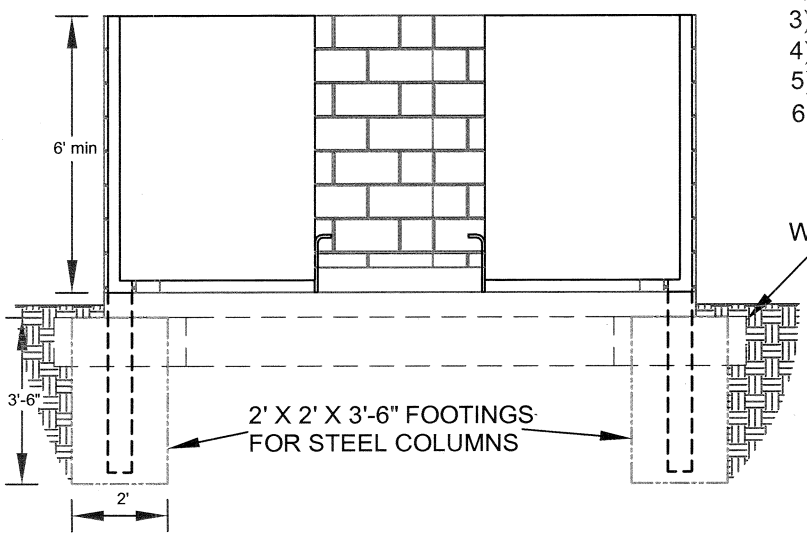

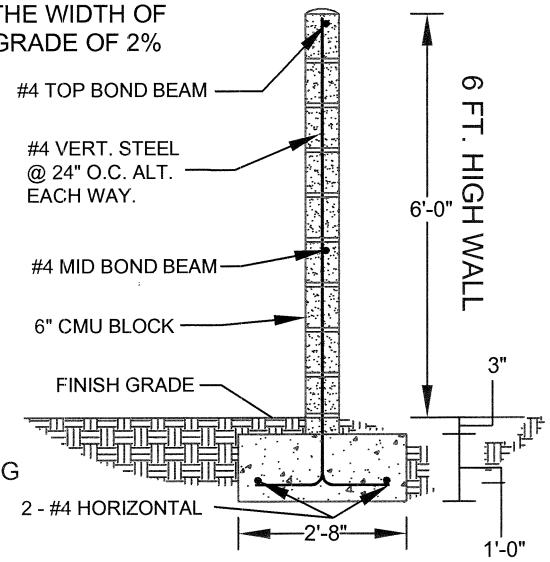

DETAIL "A - A"

Development Department
Building Division

TRASH ENCLOSURE STANDARD DETAILS

14343 Civic Drive
Victorville, CA 92393

(760) 955-5100
Fax (760) 269-0072

DEC. 2, 2014