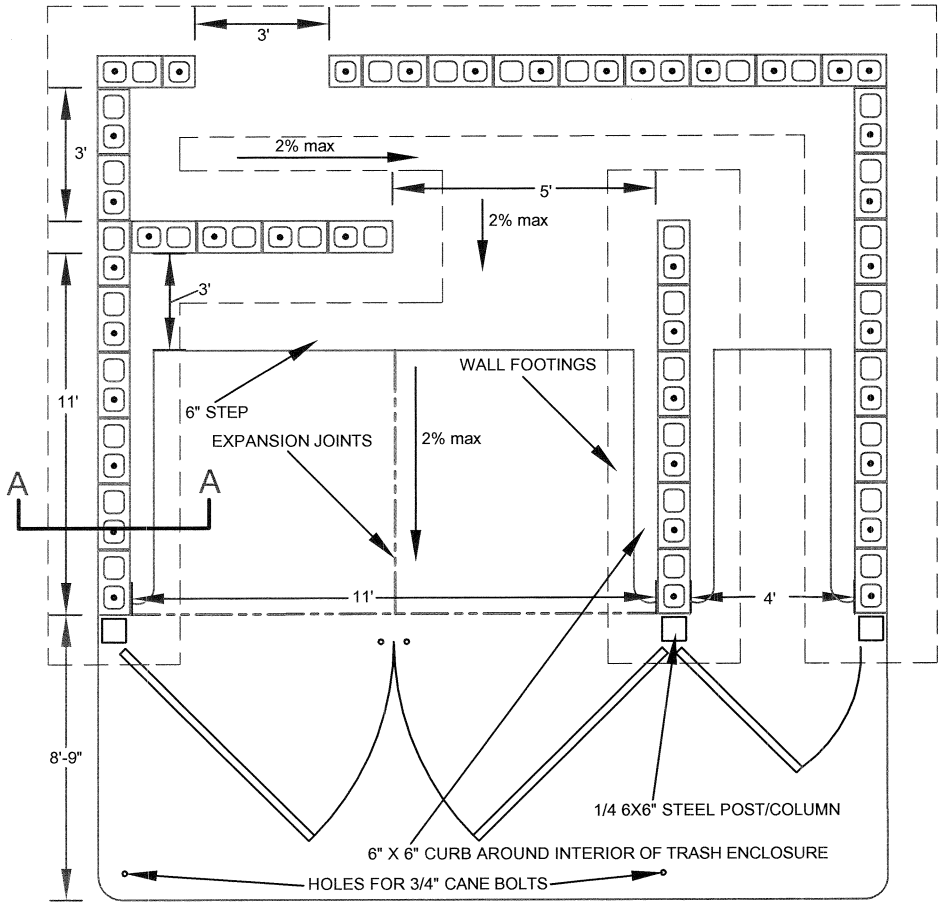

NOTE: THE TRASH ENCLOSURE SHALL COMPLY WITH ALL CALIFORNIA ACCESSIBILITY REQUIREMENTS.

1) WALLS ARE TO BE OF DECORATIVE BLOCK, MASONRY, OR SIMILAR MATERIALS CONSISTANT WITH THE ARCHITECURE, COLOR, AND ACCENT MATERIALS OF THE PRIMARY BUILDING

2) GATES ARE TO BE SOLID NON-TRANSPARENT METAL CONSTRUCTION

3) SWIVEL POINTS ON DOORS SHALL BE LOCATED OUTSIDE OF THE OPENING AREA OF THE ENCLOSURE

4) SWIVEL POINTS SHALL BE ATTACHED TO CONCRETE FILLED STEEL POSTS/COLUMNS AT ENDS OF WALLS

5) ENCLOSURE SHALL BE ON A LEVEL PAD AT GROUND LEVEL. THE AREA BETWEEN THE PAD AND THE PICK UP AREA SHALL BE A PAVED AREA 4" DEEP FOR THE WIDTH OF THE ENCLOSURE AND SHALL NOT EXCEED A GRADE OF 2%

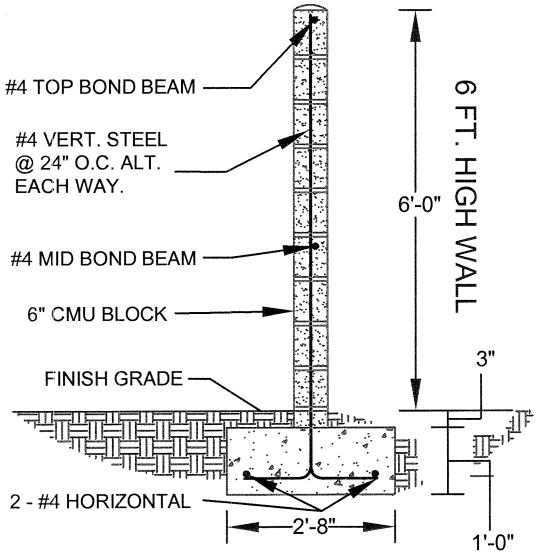

DETAIL "A - A"

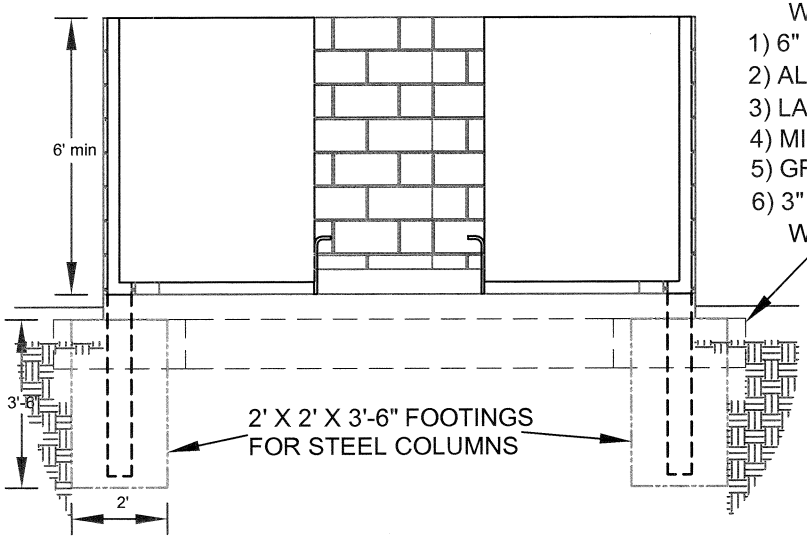

WALL NOTES:
1) 6" MIN. CMU BLOCK
2) ALL REBAR TO BE #4 MIN.
3) LAP ALL REBAR MIN. 20"
4) MIN. 3" FROM REBAR TO EARTH
5) GROUT ALL CELLS CONTAINING REBAR
6) 3" COVER OF EARTH FROM TOP OF FOOTING WALL FOOTINGS

CITY OF VICTORVILLE CALIFORNIA	Development Department Building Division		
	TRASH ENCLOSURE WITH GREASE BARREL STANDARD DETAILS		
	14343 Civic Drive Victorville, CA 92393	(760) 955-5100 Fax (760) 245-0072	DEC 2, 2014