GATE LATCHING REQUIREMENTS FOR POOLS

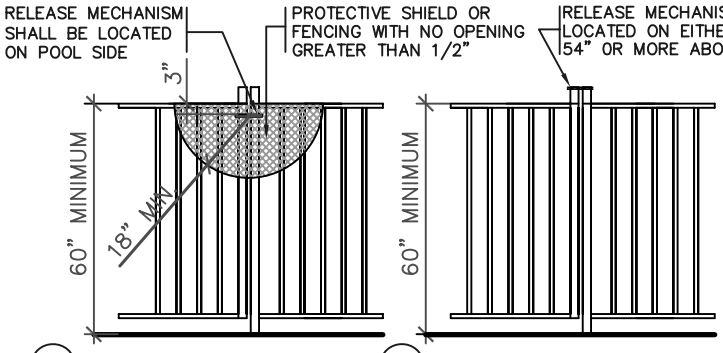

1 CONDITION 1

2 CONDITION 2

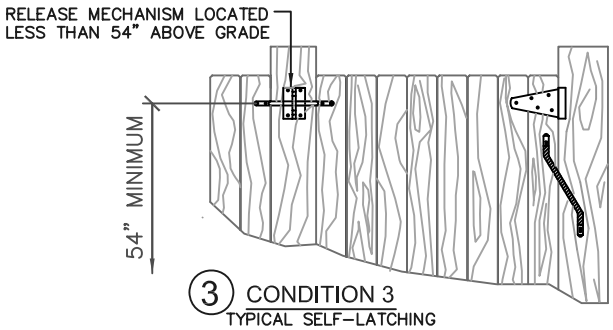

3 CONDITION 3
TYPICAL SELF-LATCHING GATE AND SPRING CLOSER

IMPORTANT NOTICE

ALL GATES 4FEET OR LESS MUST SWING AWAY FROM POOL, BE SELF-CLOSING AND SELF-LATCHING. ALL GATES OVER 4 FEET WIDE MUST BE LOCKED AT ALL TIMES.

SECONDARY DOORS ARE DOORS INSTALLED IN UNOCCUPIED SPACES AND OFFER DIRECT ACCESS TO THE POOL SUCH AS A GARAGE PASS THROUGH MAN DOOR. SECONDARY DOORS MUST BE: **OPTION 1** - SELF-CLOSING AND AUTOMATIC LATCHING, **OPTION 2** - SELF-CLOSING WITH ALARM OR **OPTION 3** - SELF-CLOSING WITH A DOUBLE AUTOMATIC LOCKING DEADBOLT.

AN ALARM INSTALLED ON DOORS WITH DIRECT ACCESS TO THE POOL FROM OCCUPIED SPACES SHALL SOUND CONTINUOUSLY FOR A MINIMUM OF 30 SECONDS WITHIN SEVEN SECONDS AFTER THE DOOR AND IT'S SCREEN, IF PRESENT, ARE OPENED. BE CAPABLE OF PROVIDING A SOUND PRESSURE LEVEL OF NOT LESS THAN 85dBA WHEN MEASURED INDOORS AT 10 FEET. THE ALARM SHALL AUTOMATICALLY RESET UNDER ALL CONDITIONS. THE ALARM SYSTEM SHALL BE EQUIPPED WITH A MANUAL MEANS, SUCH AS A TOUCH PAD OR SWITCH, TO TEMPORARILY DEACTIVATE THE ALARM FOR A SINGLE OPENING. SUCH DEACTIVATION SHALL LAST NO LONGER THAN 15 SECONDS. LOCATED AT MINIMUM OF 54 INCHES ABOVE THE THRESHOLD OF THE DOOR,*****THE ALARM SHALL NOT HAVE AN ON / OFF SWITCH.*****

VARIOUS POOL FENCE TYPES

(NOT ALL POSSIBLE POOL FENCE DESIGNS ARE SHOWN, PLEASE CHECK WITH YOUR INSPECTOR FOR MORE INFORMATION)

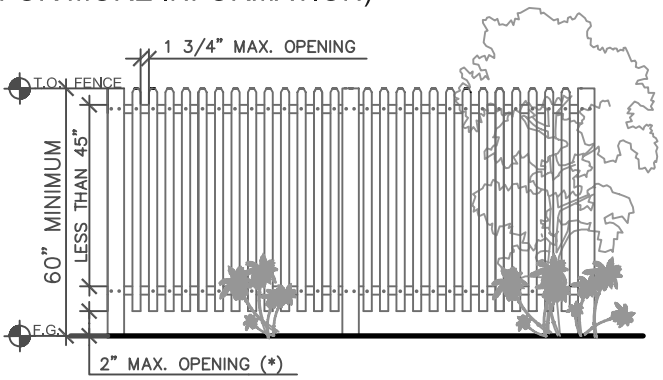

A WOOD FENCE

IF HORIZONTAL MEMBERS ARE LESS THAN 45"APART, VERTICAL SPACING SHALL NOT EXCEED 1-3/4" AND HORIZONTAL MEMBERS SHALL BE ON POOL SIDE.

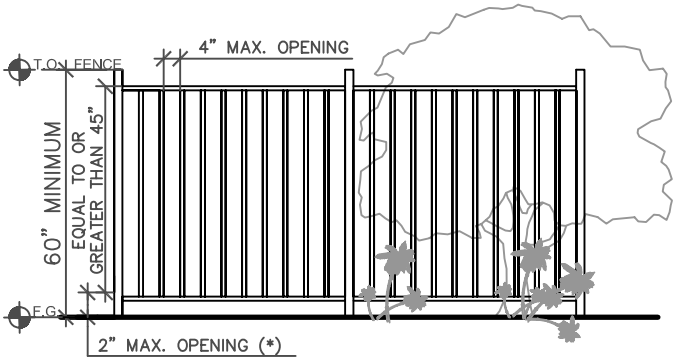

B STEEL FENCE

IF HORIZONTAL MEMBERS ARE EQUAL OR GREATER THAN 45" APART, VERTICAL SPACING SHALL NOT EXCEED 4".

(*) NOTE FOR WOOD & STEEL FENCE

SPACING FROM GRADE LEVEL TO BOTTOM OF FENCE, MAY BE 4 INCHES IF GRADE BELOW FENCE HAS SOLID IMPENETRABLE SURFACE SUCH AS CONCRETE.

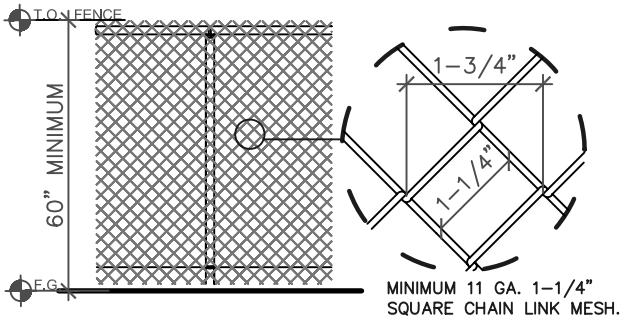

C CHAIN LINK FENCE

IF CHAIN LINK DIMENSIONS ARE LARGER THAN SHOWN ABOVE, THEN SLATS MAY BE WOVEN INTO THE CHAIN LINK MESH AND FASTENED AT THE TOP AND BOTTOM.

CITY OF VICTORVILLE Development Department	
VARIOUS POOL FENCE TYPES GATE LATCHING REQUIREMENTS	
(760) 955-5100 Fax (760) 269-0072	14343 Civic Drive Victorville, CA 92393
	06/14/11 — 1 OF 1